6-30-80
Vol. 45 No. 127
Pages 43681-44244

federal register

Monday
June 30, 1980

Highlights

44090 **Incorporation by Reference** Office of the Federal Register approves certain materials in Titles 28–41; (Part III of this issue)

43858 **Grant Programs—Environmental Protection** EPA proposes method for distribution of wastewater construction grant funds; comments by 7–15–80

43976, 44086 **Energy Conservation** DOE proposes rules and announces availability of environmental assessment on certain appliances under Energy Conservation Program for Consumer Products; comments by 8–29–80, meeting 7–8–80, hearings 8–11 through 8–15 and 8–25–80 (2 documents) (Part II of this issue)

44238 **Petroleum** DOE/ERA proposes rules and announces hearing on equal application rule; comments by 8–29–80, hearings 7–15 and 7–22–80 (Part IX of this issue)

43909 **Radiation Materials** Radiation Policy Council solicits comments on low level nuclear waste disposal; comments by 7–24–80

44188 **Motor Vehicle Pollution** EPA establishes optional pilot program to evaluate alternative method of determining durability of emission control in new light-duty vehicles and light-duty trucks; effective 6–30–80 (Part VI of this issue)

CONTINUED INSIDE

Highlights

FEDERAL REGISTER Published daily, Monday through Friday, (not published on Saturdays, Sundays, or on official holidays), by the Office of the Federal Register, National Archives and Records Service, General Services Administration, Washington, D.C. 20408, under the Federal Register Act (49 Stat. 500, as amended; 44 U.S.C. Ch. 15) and the regulations of the Administrative Committee of the Federal Register (1 CFR Ch. I) Distribution is made only by the Superintendent of Documents, U.S. Government Printing Office, Washington, D.C. 20402.

The Federal Register provides a uniform system for making available to the public regulations and legal notices issued by Federal agencies. These include Presidential proclamations and Executive Orders and Federal agency documents having general applicability and legal effect; documents required to be published by Act of Congress and other Federal agency documents of public interest. Documents are on file for public inspection in the Office of the Federal Register the day before they are published, unless earlier filing is requested by the issuing agency.

The Federal Register will be furnished by mail to subscribers, free of postage, for $75.00 per year, or $45.00 for six months, payable in advance. The charge for individual copies is $1.00 for each issue, or $1.00 for each group of pages as actually bound. Remit check or money order, made payable to the Superintendent of Documents, U.S. Government Printing Office, Washington, D.C. 20402.

There are no restrictions on the republication of material appearing in the Federal Register.

Area Code 202-523-5240

44202 **Air Pollution Control** EPA issues amendments to rules regarding standards of performance for fluoride emissions for new primary aluminum plants; effective 6-30-80 (Part VII of this issue)

43717 **Transportation** ATBCB adapts general policy concerning rights of disabled persons to accessible public transportation; effective 5-16-80

44176 **Air Transportation** DOT/FAA issues rules on advanced simulation; effective 7-30-80 (Part V of this issue)

44106 **Improving Government Regulations** EPA publishes Agenda of Regulations; (Part IV of this issue)

44220 **Prisons** Justice/Prisons Bureau invites comments on control, custody, care, treatment and instruction of inmates; effective 6-30 and 8-1-80, comments by 9-1-80 (Part VIII of this issue)

43794 **Equal Employment Opportunity** EEOC proposes to amend rules concerning complaints of handicap discrimination by Federal employment applicants; comments by 8-29-80

43723, 43732, 43740, 43741 **Government Procurement** NASA publishes final rules regarding procurement, regulatory coverage and a new contract clause; effective 6-30-80 (4 documents)

43923 **Income Taxes** Treasury/IRS announces intent to disclose written determinations for public inspection

43681 **Mobile Homes** FHLBB prescribes consumer protections which must be included in loans secured by first liens; effective 7-30-80

43701 **Satellites** Commerce/NOAA revises rules describing the United States Geostationary Operational Environmental Satellite Data Collection System; effective 6-30-80

43841 **Privacy Act Documents** DOD/Navy

43925 **Sunshine Act Meetings**

Separate Parts of This Issue

43976 **Part II, DOE**
44090 **Part III, Office of the Federal Register**
44106 **Part IV, EPA**
44176 **Part V, DOT/FAA**
44188 **Part VI, EPA**
44202 **Part VII, EPA**
44220 **Part VIII, Justice/Prisons Bureau**
44238 **Part IX, DOE/ERA**

Contents

Federal Register
Vol. 45, No. 127
Monday, June 30, 1980

Agricultural Marketing Service
PROPOSED RULES
43789 Papayas grown in Hawaii

Agriculture Department
See also Agricultural Marketing Service; Farmers Home Administration; Federal Crop Insurance Corporation.
NOTICES
Meat import limitations:
43816 Third quarterly estimates

Antitrust Division
NOTICES
Competitive impact statements and proposed consent judgments:
43904 Texas Citrus and Vegetable Growers and Shippers

Architectural and Transportation Barriers Compliance Board
RULES
43717 Public transportation accessibility policy

Army Department
See Engineers Corps.

Civil Aeronautics Board
NOTICES
Hearings, etc.:
43816 Former large irregular air service investigation, Phase III
43816 Wardair Canada (1975), Ltd.

Civil Rights Commission
NOTICES
Meetings; State advisory committees:
43817 California
43817 Indiana
43817 Michigan
43817 Nevada
43817 New Hampshire
43817 Oregon
43818 Rhode Island
43925 Meetings; Sunshine Act

Civil Rights Office, Education Department
RULES
44090 Incorporations by reference, approval. See entry under Federal Register Office.

Coast Guard
RULES
43704 Incorporations by reference, approval; editorial changes
44090 Incorporations by reference, approval. See entry under Federal Register Office.
43705 Oil pollution prevention—vessels and marine oil transfer facilities; correction
Pollution:
43705 Tank vessels carrying oil in bulk; ballast tanks and washing systems standards

Commerce Department
See National Oceanic and Atmospheric Administration.

Commodity Futures Trading Commission
NOTICES
43925 Meetings; Sunshine Act (2 documents)
Self-regulatory organizations; proposed rule changes:
43820 Commodity Exchange, Inc.; gold and silver contracts; inquiry

Conservation and Solar Energy Office
PROPOSED RULES
Appliances and consumer products:
44086 Efficiency standards; environmental assessment availability
43976 Efficiency standards

Defense Department
See Engineers Corps; Navy Department.

Depository Institutions Deregulation Committee
NOTICES
43925 Meetings; Sunshine Act

Economic Regulatory Administration
PROPOSED RULES
Petroleum allocation and price regulations:
44238 Equal application rule; sales of gasoline
NOTICES
Motor gasoline; State recommendations to increase retail price margin:
43845 Oregon
Natural gas exportation and importation petitions:
43846 Transcontinental Gas Pipe Line Corp.
Powerplant and industrial fuel use; prohibition orders, exemption requests, etc.:
43843 Tampa Electric Co.

Education Department
See also Civil Rights Office, Education Department.
NOTICES
Meetings:
43843 Indian Education National Advisory Council

Energy Department
See also Conservation and Solar Energy Office; Economic Regulatory Administration; Federal Energy Regulatory Commission.
NOTICES
Remedial orders:
43845 Exxon Co., U.S.A.

Engineers Corps
NOTICES
Environmental statements; availability, etc.:
43840 Wynoochee Enhancement Fish Hatchery, Aberdeen, Wash.

Environmental Protection Agency
RULES
Air pollution; standards of performance for new stationary sources:
44202 Primary aluminum plants; fluoride emissions
Air pollution control, new motor vehicles and engines:
44188 Alternative durability program; light-duty vehicles and trucks
44090 Incorporations by reference, approval. See entry under Federal Register Office.
Pesticide chemicals in or on raw agricultural commodities; tolerances and exemptions, etc.:
43720 Bacilus thuringiensis Berliner; incorporation by refrence update
Toxic substances:
43721 Chlorofluoroalkanes, fully halogenated; reporting and general requirements; recodification
PROPOSED RULES
Air quality implementation plans; approval and promulgation; various States, etc.:
43794 New York
Improving Government regulations:
44106 Regulatory agenda
NOTICES
Air pollutants; hazardous; National emission standards:
43865 Ohio; General Tire & Rubber Co.; 6000 gallon reactor installation; application approval
Grants; State and local assistance:
43858 Wastewater treatment construction funds; proposed distribution method; inquiry
Toxic and hazardous substances control:
43864, 43866 Premanufacture notices receipts (2 documents)
43863 Premanufacturing notification requirements; test marketing exemption approval

Environmental Quality Council
NOTICES
43824 Toxic Substances Strategy Committee; final report to President; availability

Equal Employment Opportunity Commission
RULES
Age discrimination in employment:
43704 Executive and high policymaking employees in private sector and tenured employees at institutes of higher education; exemptions; final interpretations; correction
PROPOSED RULES
Equal employment opportunity in the Federal Government:
43794 Handicap discrimination, complaints
NOTICES
43925 Meetings; Sunshine Act

Farmers Home Administration
NOTICES
43816 Business and industrial loans, insured; interest rates

Federal Aviation Administration
RULES
Air carriers certification and operations; and airmen certification:
43176 Flightcrew training in advanced flight training simulators
Airworthiness directives:
43695, 43696 Boeing (2 documents)
43693 Britten-Norman
43691 McDonnell Douglas
43688–43693 Piper (4 documents)
43694 Rockwell
43697 Sikorsky
43699 Standard instrument approach procedures
43698, 43699 Transition areas (2 documents)
PROPOSED RULES
Airworthiness directives:
43790 Hiller
43791, 43792 McDonnell Douglas (3 documents)
NOTICES
43919 Exemption petitions; summary and disposition

Federal Communications Commission
RULES
Radio stations; table of assignments:
43760 Arkansas
PROPOSED RULES
Radio stations; table of assignments:
43813 Colorado
43810 Illinois
43811 Missouri
43812 Washington
Television broadcasting:
43814 Cable television; frequency channeling requirements and restrictions, signal leakage, etc.; correction
NOTICES
43872 FM broadcast applications accepted for filing and notification of cut-off date
Hearings, etc.:
43867 APW Enterprises, Inc., et al.
43868 Buford Television of Maryland, Inc., et al.
43867 Buford Television of Missouri, Inc., et al.
43869 Fox River Broadcasting, Inc., et al.
43870 KBIZ, Inc., et al.
43869 Korral Radio, Inc., et al.
43871 Otter Tail Promotions, Inc., et al.

Federal Contract Compliance Programs Office
RULES
44090 Incorporations by reference, approval. See entry under Federal Register Office.

Federal Crop Insurance Corporation
PROPOSED RULES
Crop insurance; various commodities:
43776 Apples
43771 Peaches
43783 Tomatoes, canning and processing

Federal Energy Regulatory Commission
NOTICES
Hearings, etc.:
43848 Arkansas Louisiana Gas Co. et al.
43848 Arkansas Power & Light Co.
43849 Columbia Gas Transmission Co.
43848 Cuba City, Wis., et al.
43848 El Paso Electric Co.
43850 Kentucky West Virginia Gas Co.
43850 Lockhart Power Co.

43851 Mid Louisiana Gas Co.
43857 Southwest Gas Corp.
43857 United Gas Pipe Line Co.
43925 Meetings; Sunshine Act
Natural gas companies:
43851 Certificates of public convenience and necessity; applications, abandonment of service and petitions to amend
43847 Small producer certificates, applications
Public utilities; small power production facilities; qualifying status; certification applications, etc.:
43849 Hunt-Wesson Foods, Inc.
43857 Twin Falls Canal Co.

Federal Highway Administration
NOTICES
Environmental statements; availability, etc.:
43920 Brown County, Wis.; intent to prepare
43920 Washington County, Oreg.; intent to prepare

Federal Home Loan Bank Board
RULES
Mortgage loans, federally-related:
43681 State usury laws, preemption; mobile home loan consumer protection provisions
NOTICES
43926 Meetings; Sunshine Act

Federal Maritime Commission
RULES
Practice and procedure:
43758 Vessel operating common carriers; testimony, exhibits, and workpapers filing requirements
NOTICES
43927 Meetings; Sunshine Act
43873 State-owned or controlled carriers in foreign commerce of U.S.; classification; list

Federal Register Office
RULES
44090 Incorporations by reference, approval

Federal Reserve System
NOTICES
Applications, etc.:
43874 ABN Bank International USA Inc.
43874 Bennett Bancshares, Inc.
43874 First Pennsylvania Corp.
43873 Florida Bancorporation, Inc.

General Accounting Office
NOTICES
43874 Regulatory reports review; proposals, approvals, violations, etc. (CAB)

General Services Administration
See also Federal Register Office.
RULES
44090 Incorporations by reference, approval. See entry under Federal Register Office.

Health, Education, and Welfare Department
See Health and Human Services Department.

Health and Human Services Department
See Social Security Administration.

Housing and Urban Development Department
PROPOSED RULES
Low income housing:
43793 PHA-owned projects; continued operation as low-income housing after completion of debt service; transmittal of interim rule to Congress

Immigration and Naturalization Service
RULES
43681 Aliens under exclusion and deportation proceedings; free legal services program; clarification

Indian Affairs Bureau
NOTICES
43875 Indian tribes, acknowledgment of existence; petitions

Interior Department
See Indian Affairs Bureau; Land Management Bureau; Surface Mining Office.

Internal Revenue Service
NOTICES
43924 Written determinations, public inspection; disclosure intention

International Trade Commission
NOTICES
Export privileges, actions affecting:
43818 Franz Eggeling et al.

Interstate Commerce Commission
RULES
Railroad car service orders; various companies:
43766 Chicago, Milwaukee, St. Paul & Pacific Railroad Co.
43764 Chicago, Rock Island & Pacific Railroad Co.
NOTICES
43877 Long and short haul applications for relief
Motor carriers:
43879 Temporary authority applications
Organization, functions, and authority delegations:
43877 Consumer Protection Office
Railroad operation, acquisition, construction, etc.:
43877 Tenmet, Inc., and Nashville & Ashland City Railroad Co.

Justice Department
See also Antitrust Division; Immigration and Naturalization Service; Prisons Bureau.
RULES
44090 Incorporations by reference, approval. See entry under Federal Register Office.
43702 Organization; Editorial Amendments
43703 Organization; nomenclature changes
NOTICES
Pollution control; consent judgments:
43904 Monongahela Power Co.
43904 Philadelphia Electric Co.

Labor Department
See also Federal Contract Compliance Programs Office; Labor Management Standards Enforcement Office; Mine Safety and Health Administration; Occupational Safety and Health Administration; Wage and Hour Division.

RULES
44090 Incorporations by reference, approval. See entry under Federal Register Office.

Labor Management Standards Enforcement Office
RULES
44090 Incorporations by reference, approval. See entry under Federal Register Office.

Land Management Bureau
NOTICES
Management framework plans; review and supplement:
43876 Wyoming
Wilderness areas; characteristics, inventories; etc.:
43876 California; information document availability
43876 Idaho

Management and Budget Office
NOTICES
43907 Agency forms under review

Mine Safety and Health Administration
RULES
44090 Incorporations by reference, approval. See entry under Federal Register Office.

National Aeronautics and Space Administration
RULES
43723, 43732, 43740, 43741 Procurement (4 documents)

National Archives and Records Service
See Federal Register Office.

National Commission on Libraries and Information Science
NOTICES
43927 Meetings; Sunshine Act

National Credit Union Administration
NOTICES
43927 Meetings; Sunshine Act

National Highway Traffic Safety Administration
NOTICES
43922 Defect and noncompliance reports; record retention requirements for equipment manufacturers; rulemaking petition denied
Meetings:
43921 Calendar of public meetings; two year list

National Labor Relations Board
NOTICES
43927 Meetings; Sunshine Act
Organization and functions:
43907 Indianapolis Regional Office; boundaries change

National Oceanic and Atmospheric Administration
RULES
43701 Geostationary operational environmental satellite (GOES) data collection system; use by non-NOAA users organizations
Pacific Salmon Fisheries Commission,
International:
43768 Fraser River sockeye and pink salmon fishery
NOTICES
Meetings:
43818 North Pacific Fishery Management Council

Navy Department
NOTICES
Meetings:
43842 Naval Research Advisory Committee
43841 Privacy Act; systems of records

Occupational Safety and Health Administration
RULES
44090 Incorporations by reference, approval. See entry under Federal Register Office.

Postal Service
RULES
44090 Incorporations by reference, approval. See entry under Federal Register Office.
Organization and administration:
43718 Assistant Postmaster General, International Postal Affairs, et al.
Practice rules and procedures:
43719 Tort claims

Prisons Bureau
RULES
Inmate control, custody, care, treatment, and instruction:
44238 Visiting regulations, disclosure or production of FBI identification or criminal history records, reimbursement of inmates participating in community employment programs, etc.

Radiation Policy Council
NOTICES
43909 Low level radioactive waste disposal; task force study; inquiry

Research and Special Programs Administration, Transportation Department
RULES
Hazardous materials:
43761 Wastes and hazardous substances; identification numbers, international and improved descriptions, forbidden materials, and organic peroxides; comprehensive transportation regulations; voluntary compliance date postponement, hearing and request for comments

Securities and Exchange Commission
NOTICES
Hearings, etc.:
43910 Morrison & Foerster Retirement Plan
43912 Narragansett Electric Co.
43912 Nyemaster, Goode, McGlaughlin, Emery & O'Brien Partnership Employees Profit Sharing Plan
Self-regulatory organizations; proposed rule changes:
43909 American Stock Exchange et al.
43914 Chicago Board Options Exchange, Inc.
43910 Chicago Board Options Exchange, Inc., et al.
43918 Pacific Stock Exchange, Inc.

Small Business Administration
NOTICES
Authority delegations:
43918 Associate Deputy Administrator for Programs, etc.; order of succession to Administrator
Disaster areas:
43919 Montana
43919 New York
43919 Texas (2 documents)

Social Security Administration
NOTICES
Financial assistance program; State plans conformity with Social Security Act:
43875 Connecticut; AFDC plan disapproval; hearing

Surface Mining Office
RULES
44090 Incorporations by reference, approval. See entry under Federal Register Office.

Tennessee Valley Authority
NOTICES
43927 Meetings; Sunshine Act

Textile Agreements Implementation Committee
NOTICES
Cotton and man-made textiles:
43819 India
Man-made textiles:
43819 Costa Rica

Transportation Department
See Coast Guard; Federal Aviation Administration; Federal Highway Administration; National Highway Traffic Safety Administration; Research and Special Programs Administration, Transportation Department; Urban Mass Transportation Administration.

Treasury Department
See Internal Revenue Service.

Urban Mass Transportation Administration
NOTICES
Environmental statements; availability, etc.:
43923 Dallas North Central Subarea, Tex.; transportation alternatives; intent to prepare and scoping meeting

Veterans Administration
RULES
44090 Incorporations by reference, approval. See entry under Federal Register Office.

Wage and Hour Division
RULES
44090 Incorporations by reference, approval. See entry under Federal Register Office.

MEETINGS ANNOUNCED IN THIS ISSUE

CIVIL RIGHTS COMMISSION
43817 California Advisory Committee, 7-26-80
43817 Indiana Advisory Committee, 7-14-80
43817 Nevada Advisory Committee, 7-18-80
43817 New Hampshire Advisory Committee, 8-12-80
43817 Oregon Advisory Committee, 7-18-80
43818 Rhode Island Advisory Committee, 7-16-80

COMMERCE DEPARTMENT
National Oceanic and Atmospheric Administration—
43818 North Pacific Fishery Management Council, and Scientific and Statistical Committee, and Advisory Panel, 7-22, 7-23, 7-24 and 7-25-80

DEFENSE DEPARTMENT
Navy Department—
Naval Research Advisory Committee, 7-14 through 7-18 and 7-21 through 7-25-80

EDUCATION DEPARTMENT
43843 National Advisory Council on Indian Education, 7-20, 7-21 and 7-22-80

TRANSPORTATION DEPARTMENT
National Highway Traffic Safety Administration—
43920 Calendar of various committees, 1980 and 1981

RESCHEDULED MEETING

CIVIL RIGHTS COMMISSION
43817 Michigan Advisory Committee, from 7-11-80 to 7-10-80

HEARINGS

HEALTH AND HUMAN SERVICES DEPARTMENT
Social Security Administration—
43875 Conformity of public assistance plan of State of Connecticut with Social Security Act, 7-17-80

TRANSPORTATION DEPARTMENT
Research and Special Programs Administration—
43761 Postponement of voluntary compliance date for display of identification numbers on placards and use of Optional Hazardous Materials Table until 10-20-80, hearing 7-31-80

CFR PARTS AFFECTED IN THIS ISSUE

A cumulative list of the parts affected this month can be found in the Reader Aids section at the end of this issue.

1 CFR
51 44090

7 CFR
Proposed Rules:
403 43771
408 (2 documents) 43776
438 43783
928 43789

8 CFR
292 43681

10 CFR
Proposed Rules:
212 44238
430 (2 documents) 43976, 44086

12 CFR
590 43681

14 CFR
39 (10 documents) 43688, 43697
61 44176
71 (2 documents) 43698, 43699
97 43699
121 44176
Proposed Rules:
39 (4 documents) 43790, 43792

15 CFR
911 43701

24 CFR
Proposed Rules:
869 43793

28 CFR
0 (2 documents) 43702, 43703
16 (2 documents) 43702, 43703
42 43703
45 43703
513 44238
522 44238
540 44238
570 44238
571 44238

29 CFR
1625 43704
Proposed Rules:
1613 43794

33 CFR
Ch. 1 43704
154 43705
155 43705
157 43705

36 CFR
115 43717

39 CFR
221 43718
224 43718
912 43719

40 CFR
60 44202
86 44188
180 43720
712 43721
762 43721
Proposed Rules:
Ch. I 44106
52 43794

41 CFR
Ch. 18 ..... 43723, 43732, 43740, 43741

46 CFR
502 43758

47 CFR
73 43760
Proposed Rules:
73 (4 documents) 43810, 43813
76 43814

49 CFR
171 43761
172 43761
173 43761
174 43761
176 43761
177 43761
1033 (2 documents) 43764, 43766

50 CFR
371 43768

Rules and Regulations

Federal Register
Vol. 45, No. 127
Monday, June 30, 1980

This section of the FEDERAL REGISTER contains regulatory documents having general applicability and legal effect, most of which are keyed to and codified in the Code of Federal Regulations, which is published under 50 titles pursuant to 44 U.S.C. 1510.
The Code of Federal Regulations is sold by the Superintendent of Documents. Prices of new books are listed in the first FEDERAL REGISTER issue of each month.

DEPARTMENT OF JUSTICE

Immigration and Naturalization Service

8 CFR Part 292

Listing of Free Legal Services Programs; Applications for Organizations

AGENCY: Immigration and Naturalization Service, Justice.

ACTION: Final rule.

SUMMARY: These amendments pertain to Immigration and Naturalization Service regulations which concern the listing, by district directors and officers-in-charge, of organizations that provide free legal services to aliens in deportation and exclusion proceedings. The amendments clarify the regulations.

EFFECTIVE DATE: June 24, 1980.

FOR FURTHER INFORMATION CONTACT:

For general information: Stanley J. Kieszkiel, Acting Instructions Officer, Immigration and Naturalization Service, 425 I Street, N.W., Washington, D.C. 20536, telephone: (202) 633-3048.

For specific information: Paul Vincent, Chief Trial Attorney, Immigration and Naturalization Service, 425 I Street, N.W., Washington, D.C. 20536, telephone: (202) 633-1125.

SUPPLEMENTARY INFORMATION: 8 CFR 292a.1 provides that district directors and officers-in-charge shall maintain a list of accredited organizations, located within their jurisdictions, which provide aliens with representation in deportation and exclusion proceedings. This amendment changes the word "accredited" to "recognized," for accuracy, and adds the phrase, "which have applied for listing under § 292a.3 of this chapter, located within their respective jurisdictions * * *" to make clear that listed organizations should only be those which are willing to assist aliens and which are presently located within a jurisdiction. 8 CFR 292a.2 provides that a listed organization have a staff of attorneys. This amendment deletes the last sentence and substitutes the phrase, "Except for an organization which is recognized under § 292.2 of this chapter and is available to render legal services in deportation and exclusion proceedings * * *" to make clear that all listed organizations must be able to provide legal assistance in deportation and exlusion proceedings.

Compliance with 5 U.S.C. 553 as to notice of proposed rulemaking and delayed effective date is unnecessary because the amendments are editorial in nature and up-date Service practice.

Accordingly, the following amendments are made to Chapter I of Title 8 of the Code of Federal Regulations:

PART 292a—LISTING OF FREE LEGAL SERVICE PROGRAMS

1. 8 CFR 292a.1 is revised to read as follows:

§ 292a.1 Listing.

District directors and officers-in-charge shall maintain a current list of organizations qualified under this part and organizations recognized under § 292.2 of this chapter which have applied for listing under § 292a.3 of this chapter, located within their respective jurisdictions, for the purpose of providing aliens in deportation or exclusion proceedings with a list of such organizations as prescribed in this chapter.

2. 8 CFR 292a.2 is amended by revising the first sentence in the paragraph to read as follows:

§ 292a.2 Qualifications.

Except for an organization which is recognized under § 292.2 of this chapter and is available to render legal services in deportation or exclusion proceedings, an organization which seeks to have its name appear on the Service lists must show that it is established in the United States, provides free legal services to indigent aliens, has on its staff attorneys as defined in § 1.1(f) of this chapter or retains, at no expense to the alien, attorneys as defined in § 1.1(f) of this chapter, who are available to render such free legal services by representation in deportation or exclusion proceedings.

* * * * *

(Sec. 103, 292; 8 U.S.C. 1103, 1362)

Dated: June 25, 1980.

David Crosland,
Acting Commissioner of Immigration and Naturalization.

[FR Doc. 80-19590 Filed 6-27-80; 8:45 am]

BILLING CODE 4410-01-M

FEDERAL HOME LOAN BANK BOARD

2 CFR Part 590

[80-393]

Preemption of State Usury Laws; Mobile Home Loan Consumer Protection Provisions

AGENCY: Federal Home Loan Bank Board.

ACTION: Final rules.

SUMMARY: The rules prescribe consumer protections which must be included in loans secured by first liens on mobile homes before such loans are eligible for the state usury law exemption contained in section 501 of the Depository Institutions Deregulation and Monetary Control Act of 1980 and implementing regulations (12 CFR Part 590). The provisions would apply to any lender seeking to make a mobile home loan under the Federal usury preemption. Please note: These rules, once in effect, will not preempt state rules which give consumers greater protection. At its July 3 meeting, the Board will reconsider the mechanism for determining whether state law is inconsistent with these Federal rules and the extent of the application of state law.

EFFECTIVE DATE: July 30, 1980.

FOR FURTHER INFORMATION CONTACT: Patricia C. Trask (Telephone: 202-377-6442), or James C. Stewart (Telephone: 202-377-6457), Office of General Counsel, Federal Home Loan Bank Board, 1700 G Street NW., Washington, D.C. 20552.

SUPPLEMENTARY INFORMATION: By Resolution No. 80-287, dated May 5, 1980 (45 FR 3112; May 12, 1980), the Federal Home Loan Bank Board proposed regulations implementing Section 501 of the Depository Institutions Deregulation and Monetary Control Act of 1980 ("Act"), Pub. L. No.

96-221, 94 Stat. 161. The Act permitted covered creditors to exceed state usury ceilings on mobile home loans until the Board adopted final regulations setting out consumer protection provisions on these loans. The only restriction the Act placed on this usury exemption was that, for loans with a precomputed finance charge, creditors refund unearned precomputed finance charges on prepaid loans to debtors in an amount not less than would be obtained using the actuarial method. By so providing, Congress precluded use of the "Rule of 78s" and other mathematical methods of calculating refunds which resulted in a lower refund to the debtor.

Section 501(c) of the Act requires the Board to issue regulations encompassing these subjects: balloon payments, prepayment penalties, late charges, deferral fees, 30-day notice to a defaulting debtor before a creditor may begin any action leading to repossession or foreclosure, and use of the actuarial method for computing refunds upon prepayment of the outstanding balance of the loan. In formulating its proposal, the Board reviewed provisions on these subjects in the Uniform Consumer Credit Code, various state codes, and regulations of the Veterans Administration and the Federal Housing Administration.

The proposed regulations were open for public comment until June 5, during which period the Board received approximately sixty responses to the proposal. Respondents included savings and loan associations, banks, bank holding companies, consumer finance companies, creditor trade associations, consumer groups, legal aid societies, and several state and Federal agencies. Comments on the proposal were generally favorable, and included suggestions for revisions which are discussed below.

Discussion of Final Amendments

Applicability. These regulations apply only when a creditor covered by the Act chooses to charge an interest rate which exceeds the state's usury limit on mobile home loans. In addition, the legislative history of the Act clearly indicates that the Board's regulations "* * * shall not preempt any state law which provides stronger protection to the consumer" (Conference Report, p. 79).

Each paragraph of the proposal is summarized below, followed by a summary of comments received and the Board's response.

Definitions: Prepayment: Paragraph (a)(1). As proposed, this definition set out circumstances constituting prepayment of a mobile home loan, including entry of judgment in favor of the creditor, refinancing and consolidation of the indebtedness.

Summary of Comments. There was very little comment on this definition. One respondent recommended that the word "entire" be added to clarify that prepayment in part is not intended by this definition.

Board Response. The Board disagrees that a prepayment must be of the entire loan, and has decided to adopt the definition as proposed. The definition becomes important when prepayment penalties are assessed by a creditor, and, although it may be more common to assess a prepayment penalty when the entire outstanding obligation is prepaid, a debtor may choose to make partial, but substantial, prepayment to reduce monthly payments.

Actuarial Method: Paragraph (a)(2). The term "actuarial method," as proposed, required that payments made on a debt be applied first to the precomputed finance charge and then to the outstanding balance of the obligation.

Summary of Comments. Respondents found this definition confusing. One noted that precomputed finance charges do not, as the definition stated, "accrue", but, as in the case of an add-on interest charge, the outstanding balance includes precomputed finance charges. Thus, there can be no allocation of payments between the outstanding balance, which includes the precomputed finance charge, and the finance charge itself. It was suggested that the Board's definition be revised to parallel those found in the Uniform Consumer Credit Code and in Federal Reserve Regulation Z (12 CFR Part 226).

Board Response. The Board agrees with the recommendations and has revised its definition.

Precomputed Finance Charge: Paragraph (a)(3). This term was defined to mean, "interest or a time/price differential (including service or carrying charges and any amount payable under a discount or other system of additional charges) as computed by the add-on or discount method."

Summary of Comments. A number of comments pointed out that this definition, as proposed, was narrower than authorized by section 501(a)(1) of the Act, and should be revised to clarify which charges (for example, points and origination fees) are included in the total of precomputed finance charges for purposes of calculating refunds.

Board Response. Section 501(a)(1) of the Act states that "precomputed finance charge" means, "interest or a time price differential within the meaning of sections 106(a)(1) and (2) of the Truth in Lending Act (15 U.S.C. 1605(a)(1) and (2)) as computed by an add-on or discount method." Section 606(a) of the Act amends those provisions of the Truth in Lending Act referred to in the definition of "precomputed finance charge" so that it is clearer which charges may be included. The Board has revised its definition accordingly, and points out that, although the change in definition under the Act does not become effective for two years following enactment on April 1, 1980, creditors may comply with the new definition under the authority of section 608(b) of the Act, or continue using the definition currently in effect.

Lender: Paragraph (a)(4). In order to avoid listing the types of lenders covered by this Part, the definition stated that all such entities are termed "lenders."

Summary of Comments. Two comments addressed this definition, one stating that it was not very helpful. Another recommended changing the term to "creditor" for two reasons. First, the definitional section of this Part (12 CFR 590.2) defines "loan," but not "lender," while other sections apply to loans, but not lenders; as a result, the definition of "lender" in paragraph (a)(4) of this section would be inappropriate. Second, the term may invite litigation as distinctions are made between the meaning of "lender" and "creditor" for purposes of distinguishing between loans and credit sales. Suggestion was made to revise the definition to read: "The term 'creditor' means any entity making or investing in a loan covered by this Part."

Board Response. The Board finds the arguments persuasive and has substituted the definition of "creditor" for lender and replaced "lender" with "creditor" wherever the former was used. Additionally, the term "debtor" is used in place of "borrower" for consistency.

General Provisions: Paragraph (b)(1). As proposed, subparagraph (b)(1) of this section provided that a loan secured by a first lien on a mobile home would be exempt from state usury laws if it were in compliance with the provisions of this section.

Summary of Comments. Criticisms of this provision by respondents noted that the coverage of the Act extends to credit transactions which are not strictly defined as "loans," but which may be termed "credit sales," "advances," and "mortgages." Thus, although those familiar with the Act are aware of its listing of credit transactions covered, the Board may consider defining the term "loan" in this section or repeating the statutory language. In a similar vein, it

was claimed that, although the Act refers to "state usury laws" in various sections, section 501(a)(1) is considerably broader in scope and may not be assumed to be incorporated in the Board's regulation if a question of interpretation arises. The Act specifically refers to "the laws of any State expressly limiting the rate or amount of interest, discount points, finance charges, or other charges which may be charged, taken, received, or reserved * * *." Such state laws would include retail installment sales acts, motor vehicle installment sales acts, and the Uniform Consumer Credit Code.

Board Response. The implied limitations of this provision, as proposed, have been clarified by use of the statutory language.

Proposed subparagraph (b)(2) stated that no provision of this section would supersede a more stringent state law provision, and added a presumption that the Board's regulations would be deemed more protective of the consumer until the Board determined, upon request of appropriate state officials, that state law provided better safeguards.

Summary of Comments. This provision generated considerable public comment. Some respondents favored the presumption of preemption, as well as the administrative decision process for resolving controversy over state and Federal provisions. They reasoned that without such a rebuttable presumption, creditors may be reluctant to make loans under the provisions of Title V of the Act because at some future time a court may determine that state law offered greater consumer protection, regardless of the creditor's best efforts to compare Federal and state provisions and follow the one which appeared to provide greater safeguards.

On the other hand, some respondents took issue with the presumption. It was contended that such presumption of preemption contradicted the legislative history of the Act. Specifically, respondents pointed to the language of the Conference Report accompanying the Act where, at page 79, the Conferees "emphasize that consumer protection provisions * * * shall not preempt any state law which provides stronger protection to the consumer." Allowing creditors to rely on the Board's presumption, it was asserted, will produce tremendous burdens for consumers who may be confronted with contracts which deliberately or negligently fail to incorporate the greater protections of state laws. Once this is discovered, consumers will be faced with the burden of challenging the Board's regulatory presumption; this may well serve to discourage consumers from pursuing remedies and encourage creditors to ignore more protective state law requirements.

It was also argued that limiting to state officials the right to challenge the presumption presents another barrier between consumers and remedies because there is no direct approach to the Board. Suggestion was therefore made to expand this provision to include any interested party.

Finally, respondents suggested that the provision should clearly state that any determination made by the Board operates prospectively. This would avoid the situation where, upon determination by the Board that its regulations are less protective than state law, a creditor who had relied upon such presumption would be liable for damages.

Board Response. The Board considered this provision at its meeting of June 19, 1980. In order to give more consideration to this complicated issue, the Board has determined not to adopt a final version of § 590.4(b)(2) at this time. Although the Boad is not required to act on this provision within 120 days of the statutory enactment, it believes that guidance in this area is imperative so that creditors and debtors may act with confidence in their mobile home credit transactions. The Board therefore will reconsider the matter at its July 3, 1980, meeting, with final action to become effective simultaneously with the other provisions of these regulations.

Refund of Unearned Interest in the Event of Prepayment: Paragraph (c). The proposal provided that in the event of full prepayment of a covered mobile home credit transaction, the debtor is entitled to a refund of unearned precomputed finance charges. The amount of this refund must not be less than would be refunded if the actuarial method of rebate calculation were used. The proposal gave creditors the option of choosing between two methods for computing the refund. Under either method, the creditor would have to calculate an annual percentage rate for the transaction based on the charges designated as precomputed finance charges in § 590.4(a)(3). The first method allowed the creditor to make certain assumptions about past payments and would enable the creditor to use the tables published by financial publishers for computing actuarial refunds. The other option would allow the creditor to use this annual percentage rate in the same manner as if the loan had been a simple interest transaction from the start.

Summary of Comments. Although the Board received nineteen comments on § 590.4(c), only a few were directed at specific parts of this paragraph. Five comments were concerned with a clarification of the charges that are subject to rebate.

Three commenters objected to the first parenthetical in subparagraph (c)(1) which specifies that creditors will not earn precomputed finance charges for the payment period in which a mobile home loan is prepaid. These commenters supported their objections by citing language on page 79 of the Conference Report which indicates that prepayment could be deemed to be made in the payment period whose due date is closest to the actual date of prepayment. The last sentence of subparagraph (c)(1) was also the subject of five comments. Several complained that requiring the lender to round the annual percentage rate down to the nearest ½ percent would result in a smaller rebate to the consumer. It was also noted that the published rebate tables are keyed to ¼ percent. Accordingly, it was felt that subparagraph (c)(1) could require a closer tolerance and still not present a hardship to creditors.

Board Response. With respect to the comments regarding the scope of the actuarial rebate, the Board notes that, in several places, the proposal referred to a rebate of finance charges rather than precomputed finance charges. The Board believes that any confusion on this point will be cleared up by consistently using the term precomputed finance charges in the final provision. After reviewing the section of the Conference Report dealing with the imputed date for prepayments, the Board concludes that the first parenthetical in subparagraph (c)(1) should be changed to deem prepayment as occurring in the payment period whose due date is closest to the actual date of prepayment. The Board also finds persuasive the arguments of commenters that suggested that creditors be required to round the rebate annual percentage rate to the nearest ¼ percent, rather than down to nearest ½ percent.

Prepayment Penalties: Paragraph (d). As proposed, this provision prohibited assessment of prepayment penalties when a debtor prepays part or all of the unpaid balance of the outstanding obligation, and required conspicuous disclosure of the right to prepay without penalty in the contract.

Summary of Comments. Approximately twenty respondents addressed this provision, generally opposed to its prohibition on any fees being assessed upon prepayment. Various suggestions were made to

liberalize the prohibition; for example, several respondents argued in favor of permitting creditors to charge an "acquisition fee" or "administrative fee" to cover the paperwork costs associated with prepayment. Suggested amounts of such fees ranged from $15 to $50 to a percentage of the outstanding balance of the loan. Analogy was made to 12 CFR 545.8-5(b), the Board's regulations for Federally-chartered savings and loans which permit prepayment penalties to be assessed on site-built homes.

Respondents also took issue with the requirement that the right to prepay without penalty be "conspicuously" printed on the loan document. It was reasoned that, since the word "conspicuous" has been litigated in connection with a requirement of Federal Reserve Regulation Z (12 CFR 226.8(b)), the Board's additional requirement might give rise to questions whether the print must be as large as, same as, or larger than that required by Regulation Z.

One respondent requested the Board to clarify that the prepayment penalty referred to in this provision does not include trustee's fees, collection costs, attorney's fees or other fees incurred by the lender when a loan is prepaid.

Board Response. The Board has determined to adopt this provision as proposed. First, the Board is charged with promulgating consumer protection provisions for limited transactions—those mobile home loans on which the interest rate will exceed the State usury limit. Mobile home loans currently carry a higher interest rate than site-built homes to reflect the risks inherent in such lending. Permission to exceed State usury limits, when applied, will result in mobile home buyers paying a still higher interest rate. The Board believes that abuses may be avoided by balancing the right to exceed the usury limit with a limitation on additional fees or charges which creditors may impose. The analogy between site-built and mobile homes is not entirely accurate at this time, and therefore the Board does not believe that similar rules should apply to every aspect of these loans.

As for the requirement that the right to prepay be "conspicuously" printed on the loan contract, the Board agrees that this may be potentially troublesome. Therefore, the requirement is changed so that type-size larger than that used for the body of the loan document may be used to call attention to this provision.

Balloon Payments: Paragraph (l). Under the proposal, no payment in a mobile home loan contract could be more than twice as large as any other regularly scheduled payment, and payment intervals could not differ substantially. There were no exceptions to these rules.

Summary of Comments. The major objection to paragraph (e) was that it was not flexible enough. It was noted that mobile home creditors offer payment plans designed to meet the needs of individuals with seasonal or intermittent income by not requiring payment during certain periods of the year. Also, it was feared that the standard practice of delaying the first payment for sixty days after loan closing would be in violation of this requirement. Finally, it was argued that limitations on the size of payments would prevent use of variable rate and renegotiable rate mortgages or loans.

Board Response. The Board is persuaded to amend this provision to accommodate the practice of delaying the first payment following loan closing and that which accommodates consumers with seasonal or intermittent income. However, the Board has insufficient data upon which to base a decision to impliedly permit variable and renegotiable rate loans on mobile homes without examining the need for additional consumer protection provisions to accompany such liberalization. It is noted that Federal savings and loan associations may not at present offer variable rate or renegotiable rate loans on mobile homes.

Late Charges: Paragraph (f). The proposal permitted the assessment of late charges only when contracted for. Late charges were further limited to three percent of the past due installment or three dollars, whichever was lower. The proposal also provided that late charges could be imposed only once with respect to any particular installment. The proposal further specified that subsequent payments must be applied to current installments, then to late installments, and finally to late charges accrued. Subparagraph (f)(5) of the proposal required a statement of accrued late charges in any written notice regarding amounts claimed due but unpaid. Subparagraph (f)(6) limited the amount of interest chargeable after maturity to the maximum rate otherwise allowable under State law.

Summary of Comments. Twenty-nine commenters objected that the late charge limitation of the lesser of three percent of the late installment or three dollars was too low. Suggested alternatives ranged from five percent with no limit to three percent and a fifteen dollar limit. It was submitted that the current formula would not permit lenders to recoup the cost of sending out late notices or lost investment income. Commenters also argued that the three dollar limit would not be an effective incentive for prompt payment and would unfairly burden punctual borrowers whose interest rates would reflect the lender's unreimbursed costs. Several commenters felt that the fifteen-day grace period required by paragraph (f) was too long. It was suggested that the provision should follow the current practice of many states in allowing only a ten-day grace period.

Thirteen comments were addressed to the application-of-payments provision in the last sentence of subparagraph (f)(2). Objections were raised that the order of application required by the proposal differed from standard accounting practice and would therefore require computer reprogramming. One commenter submitted that the problem of multiple late charges which (f)(2) addresses could be avoided by merely requiring that payments be applied to current installments and that late charges be assessed only once.

Eight comments were received criticizing the notice of late charge requirement of (f)(5). Objections were generally based on the cost of reprogramming computers to include late charges in billing statements. It was also contended that the provision was unclear and would seem to require a statement of late charges in any communication to the borrower, regardless of context.

Three commenters took exception to limits on interest chargeable after maturity, as proposed in subparagraph (f)(6). The limitation was characterized as being contrary to the intent of section 501. One commenter questioned whether interest after maturity should be deemed a late charge subject to the Board's authority under section 501(c)(1) of the Act.

Board Response. The Board is persuaded that a better balance will be struck by raising the allowable late charge to five percent of the delinquent installment with a five dollar maximum. This appears to be the applicable limit on late charges in the majority of states and will not impose a significantly greater burden on the individual consumer than the 3%/$3.00 formula. In addition, the wording of § 590.3(f) has been changed to indicate that if a particular state allows a lesser late charge, that state's limits will apply to the loan or credit transaction.

The Board is not persuaded that the fifteen-day grace period should be shortened. This has been the Board's long-standing rule for Federal savings and loan associations' home loans, 12 CFR 545.8-3(e), and the Board sees no compelling reason to depart from it.

After considering the comments received regarding the proposed application-of-payments formula of subparagraph (f)(2), the Board agrees that amendment of this provision is warranted. For purposes of determining late charges, payments will still be deemed to apply first to current installments; the further order of application will be at the discretion of the lender. The Board is persuaded that the revised provision will eliminate the problem of multiplication of late charges without placing undue burdens on creditors.

The Board finds no compelling justification for deleting the requirement of a disclosure of late charges in any written notice of amounts claimed to be due but unpaid. Nor is the Board convinced that post-maturity interest limitations of subparagraph (f)(6) should be changed.

The Board believes that a limitation on such interest charges is desirable. Rather than attempting to mandate a specific maximum post-maturity interest rate, and creating uncertainty as to whether this limit should give way to more restrictive state law, the Board has determined to adopt subparagraph (f)(6) as proposed.

Deferral Fees: Paragraph (g). The proposal limited the allowable deferral fee to one percent of the installment or portion thereof being deferred. The proposal further specified that any agreement to defer an installment must be in writing and signed by the parties. The agreement would be required to incorporate the original mobile home credit transaction by reference and indicate precisely which installments were being deferred. No writing could be construed to grant authority to the creditor to execute deferrals unilaterally. Other portions of the paragraph dealt with how payments received with respect to deferred installments would be applied and whether a late charge could be assessed on a payment which is later deferred. Subparagraph (6) of the provision specified that deferral fees could not be secured.

Summary of Comments. Fifteen commenters felt that the one percent fee was too low. It was generally suggested either that deferrals be made at the contract rate or that the fee be based on one percent of the entire outstanding balance. The role of deferrals in simple interest loans was also a subject for comment. One creditor representative noted that if a payment due date were deferred on such a loan, a lender could conceivably be required to reduce the interest rate on the loan to twelve percent per annum during the deferral period. A consumer oriented commenter contended that simple-interest creditors should not be entitled to an extra fee for deferrals since they will earn interest at the contract rate during the deferral period.

Several commenters took exception to the proposed requirement of written deferral agreements. In addition to general objections regarding excessive paperwork, it was noted that since many borrowers live considerable distances from their creditors, deferrals will have to be accomplished through the mails and may be inordinately delayed. It was contended the disclosure requirements of Regulation Z adequately inform borrowers of the cost of deferrals and that as long as unilateral deferrals are prohibited, the deferral process will not be abused.

Several creditor-commenters criticized the requirement of subparagraph (g)(4) that any payment received at the time of the deferral should be applied to reduce the installment being deferred. It was submitted that any money received at the time of the deferral should be used to pay the deferral fee. These commenters contended that if the creditor is not able to obtain this fee at the outset, it will be less inclined to agree to deferrals. Creditor representatives also took exception to the requirement that subsequent payments be applied to current installments, then to deferred installments and then to deferral charges. It was felt that this requirement, like the similar requirement of subparagraph (f)(2), would mean high reprogramming costs. One commenter suggested that any difficulties with overpayment of deferral charges could be avoided by requiring that unearned deferral fees by refunded on a *pro rata* basis in the event the deferred installment is paid prior to the deferral date.

One comment was received regarding the requirement of proposed subparagraph (g)(5) that no late charges be assessed in connection with an installment that is being deferred. It was objected that if the deferral is not agreed to until after a past due notice is sent, the lender will have incurred a cost which should be borne by the borrower.

Eight comments dealt with the proposed subparagraph (g)(6) prohibition against securing deferral charges. Major objections were that the provision will necessitate redrafting of security agreements and will deny creditors their most effective remedy.

Board Response. It is the Board's view that the limitations on deferral fees should be adopted as proposed. The one percent figure is in accord with the restrictions imposed on such charges in a number of states and is not unreasonable. Section 590.3(g) does not prohibit deferral of the entire outstanding balance for a month as an alternative to deferring a single installment and will accordingly provide sufficient compensation incurred for the agreement. However, clarification is necessary with respect to the role of deferral fees in simple-interest loans. The Uniform Consumer Credit Code limits these fees to precomputed transactions. The Board notes that the main justification for separate deferral charges is the fact that creditors do not earn extra interest during the deferral period if finance charges have been computed in advance. Accordingly, the propriety of deferral fees in simple-interest transactions is questionable. The final regulation therefore does not allow simple interest creditors to collect a separate deferral fee.

Although the writing requirement of § 590.3(g) elicited strong comment, the Board is not of the view that the requirement should be deleted. Slight delays in the processing of deferral agreements are not too high a price to pay for the certainty of a written agreement.

The Board is persuaded that modification to the application-of-payments procedure of subparagraph (g)(4) is warranted. The requirement to apply payments received at the time of deferral to reduce the installments deferred was meant to ensure that borrowers not be required to defer more installments than necessary. The application-of-subsequent-payments provision was designed to prevent unpaid deferral fees from placing subsequent installments in default. The Board is concerned, however, that the first requirement may unnecessarily complicate disclosure of deferral costs. The second requirement will be modified in the same manner as (f)(2) as described above.

The Board is not persuaded that it should delete the requirement of a refund of late charges when a delinquent installment is deferred. The deferral fee will provide adequate compensation for expenses incurred.

Finally, the Board has decided to delete the prohibition against securing deferral fees for reasons advanced by respondents.

Notice Before Repossession or Foreclosure: Paragraph (h). Paragraph (h) of the proposal provided that creditors could not bring actions to repossess or foreclose against a mobile home until 30 days after the borrower was sent notice of the impending action.

The proposal set out a sample notice apprising the debtor that if his or her account were not brought current within the thirty-day period, the creditor would have the right to repossess or foreclose. The notice further specified that if the mobile home were taken, the debtor would be entitled to the return of his or her mobile home upon payment of the debt and reasonable expenses within twenty-one days. The proposal provided that the debtor was entitled to two such notices within any one-year period.

Summary of Comments. Numerous comments were received regarding the above proposals. Several commenters objected to the rights to cure and redeem which were incorporated in the notice. It was argued that paragraph (h) went beyond the scope of § 501(c) of the Act in including these rights. Some commenters submitted that states generally have post-redemption remedies which provide adequate protection to the consumer and this is therefore not a problem which the Board need address. It was also felt that adding a twenty-one day period during which the creditor could not sell the mobile home to the thirty-day delay required by the statute would be an extreme disadvantage to creditors.

A number of commenters objected that the proposal was deficient in that it did not include an exception to the notice requirement in cases of abandonment and other extreme circumstances. It was pointed out that section 501(c) of the Act appears to contemplate that such an exception be incorporated into the Board's regulations. A number of suggestions were received regarding circumstances considered extreme enough to warrant suspension of the notice requirement.

Another common objection to the proposed requirement was that it did not deal with defaults other than non-payment. Commenters suggested that, since the statute appears to contemplate that the notice be sent before any repossession or foreclosure, the notice should be more generally worded to cover non-monetary defaults.

Some commenters felt that the proposal, as worded, would also require the creditor to elect between remedies, *i.e.* the creditor could not sue for the unpaid indebtedness if it chose to repossess.

Another suggestion for change was that the notice be required to be sent by registered mail with return receipt requested. On the other hand, some commenters believed that sending the notice to the debtor's "last known address" would be a sufficient effort.

Board's Response. In considering the recommended amendments to the notice requirement and the form of the notice itself, the Board's intent was to implement the rights inherent in the statutory directive in such a manner that both debtor and creditor would be fairly positioned to take whatever action is necessary to protect their respective positions. The Board has determined that any notice to a defaulting debtor without explanation of the debtor's required actions to cure the default would be a meaningless exercise. Although the Board, on reconsideration, finds some merit in the argument that the right to redeem included in the notice may exceed the authority of paragraph (c)(2) of Section 501 of the Act, it may at a later time find that such right may be proper under paragraph (c)(4) of section 501. At present, therefore the revised paragraph provides that wherever a state right to redeem exists, the Board's required notice must include such right. Revisions have also been made to waive the notice requirement in case of abandonment of the mobile home or other extreme circumstances. The Board declines to list which circumstances are covered; instead, state law provisions may be followed.

Although the form and language of the notice was favorably viewed by respondents, the Board has made changes to comport with the change in the notice requirement that the notice be sent when the default is for reasons other than failure to make payments. Also, the Board is requiring that such notice be sent, in addition to any action to begin repossession or foreclosure, when the creditor decides to accelerate the outstanding unpaid balance of the obligation. This event is of the same magnitude as repossession or foreclosure and would, in any event, accompany either of the above actions.

The Board has revised subparagraph (h)(2) to require that the notice be sent by registered or certified mail, with a return receipt requested. This provides protection for the creditor and certainty that the notice was received.

Additional Consumer Protections

In Resolution No. 80-287, the Board also requested comments regarding additional consumer protections that should be considered with respect to mobile home loans exempted from state usury ceilings by section 501 of Pub. L. 96-221. The Board's authority to prescribe additional safeguards is conditioned on its making a study of the impact of each new requirement. *See* H.R. Rep. No. 842, 96th Cong., 2d Sess. 79-80 (1980). The Board's findings must then be published. *See* Depository Institutions Deregulation and Monetary Control Act section 501(c)(4), Pub. L. 96-221, 94 Stat. 163 (1980).

Five commenters suggested specific areas of study. The most common suggestion was that the Board address the problem of charges for attorney fees in collection actions. It was noted that loan contracts often require the borrower to assume the costs of such fees. The amounts sought under these clauses, however, commonly bear no relation to the costs actually incurred by the creditor. Another area for scrutiny is charges for credit and property insurance. Most mobile home loan contracts require the borrower to maintain insurance on the unit. Insurance is often bought from the creditor, which results in three forms of indirect compensation to the creditor: (1) Commissions; (2) charges for financing premiums; and (3) extra income to the creditor upon prepayment of the loan or cancellation of the insurance, since rebates of unearned charges are calculated by use of the Rule of 78's. It was also noted that dealers often receive a fee from lenders for referring their purchasers for financing. It was suggested that this hidden cost of financing should be an object of disclosure. Other suggested areas of investigation include extension of the Federal Trade Commission's "Holder-in-Due-Course" rule (16 CFR Part 433) to mobile home paper, study of abuses of security interests, and application of the Magnuson-Moss warranty disclosure requirements to mobile home warranties.

The Board did not, however, receive any documentation from which it could determine that any such practice was widespread or clearly abusive. Therefore, no additional rules are adopted or proposed at this time. However, the Board directed staff to conduct a 60-day study of these and other areas, including the consumer's right to redeem once foreclosure or repossession has begun.

Accordingly, the Federal Home Loan Bank Board hereby amends Part 590 of the Regulations for Federally-Related Mortgage Loans (12 CFR Part 590) by amending § 590.4 as follows, such changes to take effect July 30, 1980.

Regulations for Federally Related Mortgage Loans

PART 590—PREEMPTION OF STATE USURY LAWS

§ 590.4 Consumer protection rules for Federally-related loans, mortgages, credit sales and advances secured by first liens on residential mobile homes.

(a) *Definitions.* As used in this section:

(1) *Prepayment.* A "prepayment" occurs upon—

(i) refinancing or consolidation of the indebtedness;

(ii) actual prepayment of the indebtedness by the debtor, whether voluntarily or following acceleration of the payment obligation by the creditor; or

(iii) the entry of a judgment for the indebtedness in favor of the creditor.

(2) *Actuarial Method.* The term "actuarial method" means the method of allocating payments made on a debt between the outstanding balance of the obligation and the finance charge pursuant to which a payment is applied first to the accumulated finance charge and any remainder is subtracted from, or any deficiency is added to, the outstanding balance of the obligation.

(3) *Precomputed Finance Charge.* The term "precomputed finance charge" means interest or a time/price differential within the meaning of sections 106(a) (1) and (2) of the Truth in Lending Act (15 U.S.C. 1605(a) (1) and (2)), as computed by the add-on or discount method.

(4) *Creditor.* The term "creditor" means any entity covered by this Part, including those which regularly extend or arrange for the extension of credit and assignees that are creditors under § 501(a)(1)(C)(v) of the Depository Institutions Deregulation and Monetary Control Act of 1980.

(b) *General.* (1) The provisions of the Constitution or the laws of any State expressly limiting the rate or amount of interest, discount points, finance charges, or other charges which may be charged, taken, received, or reserved shall not apply to any loan, mortgage, credit sale, or advance which is secured by a first lien on a residential mobile home if a creditor covered by this Part complies with the consumer protection regulations of this section.

(2) [Reserved: application of State law]

(c) *Refund of precomputed finance charge.* In the event the entire indebtedness is prepaid, the unearned portion of the precomputed finance charge shall be refunded to the debtor. This refund shall be in an amount not less than the amount which would be refunded if the unearned precomputed finance charge were calculated in accordance with the actuarial method, except that the debtor shall not be entitled to a refund which is less than one dollar. The unearned portion of the precomputed finance charge is, at the option of the creditor, either:

(1) that portion of the precomputed finance charge which is allocable to all unexpired payment periods as originally scheduled, or if deferred, as deferred. A payment period shall be deemed unexpired if prepayment is made within 15 days after the payment period's scheduled due date. The unearned precomputed finance charge is the total of that which would have been earned for each such period had the loan not been precomputed, by applying to unpaid balances of principal, according to the actuarial method, an annual percentage rate based on those charges which are considered precomputed finance charges in this section, assuming that all payments were made as originally scheduled, or as deferred, if deferred. The creditor, at its option, may round this annual percentage rate to the nearest one-quarter of one percent; or

(2) the total precomputed finance charge less the earned precomputed finance charge. The earned precomputed finance charge shall be determined by applying an annual percentage rate based on the total precomputed finance charge (as that term is defined in this section), under the actuarial method, to the unpaid balances for the actual time those balances were unpaid up to the date of prepayment. If a late charge or deferral fee has been collected, it shall be treated as a payment.

(d) *Prepayment penalties.* A debtor may prepay in full or in part the unpaid balance of the loan at any time without penalty. The right to prepay shall be disclosed in the loan contract in type larger than that used for the body of the document.

(e) *Balloon payments.* (1) No creditor may enter into an agreement with a debtor which requires or anticipates a schedule of payments under which any one payment is more than twice the amount of an otherwise regularly scheduled payment, or where the intervals between any consecutive payments differ substantially, except as permitted in subparagraphs (2) and (3) below.

(2) The first payment may be deferred not longer than 2 months from the date the loan is closed.

(3) The parties may agree in writing to payments that are not substantially equal or that are paid at unequal intervals if the livelihood of the debtor derives from seasonal or intermittent income, the payments or intervals are expressly related to the debtor's anticipated income, and the agreement sets out the amounts and due dates of each scheduled installment.

(f) *Late Charges.* (1) No late charge may be assessed, imposed, or collected unless provided for by written contract between the creditor and debtor.

(2) To the extent that applicable State law does not provide for a longer period of time, no late charge may be collected on an installment which is paid in full on or before the 15th day after its scheduled or deferred due date even though an earlier maturing installment or a late charge on an earlier installment may not have been paid in full. For purposes of assessing late charges, payments received are deemed to be applied first to current installments.

(3) A late charge may be imposed only once on an installment; however, no such charge may be collected for a late installment which has been deferred.

(4) To the extent that applicable State law does not provide for a lower charge or longer grace period, a late charge on any installment not paid in full on or before the 15th day after its scheduled or deferred due date may not exceed the lesser of $5.00 or five percent of the unpaid amount of the installment.

(5) If, at any time after imposition of a late charge, the lender provides the borrower with written notice regarding amounts claimed to be due but unpaid, the notice shall separately state the total of all late charges claimed.

(6) Interest after the final scheduled maturity date may not exceed the maximum rate otherwise allowable under State law for such contracts, and if such interest is charged, no separate late charge may be made on the final scheduled installment.

(g) *Deferral fees.* (1) With respect to mobile home credit transactions containing precomputed finance charges, agreements providing for deferral of all or part of one or more installments shall be in writing, signed by the parties, and

(i) Provide, to the extent that applicable state law does not provide for a lower charge, for a charge not exceeding one percent of each installment or part thereof for each month from the date when such installment was due to the date when it is agreed to become payable and proportionately for a part of each month, counting each day as 1/30th of a month;

(ii) Incorporate by reference the transaction to which the deferral applied;

(iii) Disclose each installment or part thereof in the amount to be deferred, the date or dates originally payable, and the date or dates agreed to become payable; and

(iv) Set forth the fact of the deferral charge, the dollar amount of the charge for each installment to be deferred, and the total dollar amount to be paid by the debtor for the privilege of deferring payment.

(2) No term of a writing executed by the debtor shall constitute authority for a creditor unilaterally to grant a deferral

with respect to which a charge is to be imposed or collected.

(3) The deferral period is that period of time in which no payment is required or made by reason of the deferral.

(4) Payments received with respect to deferred installments shall be deemed to be applied first to deferred installments.

(5) A charge may not be collected for the deferral of an installment or any part thereof if, with respect to that installment, a refinancing or consolidation agreement is concluded by the parties, or a late charge has been imposed or collected, unless such late charge is refunded to the borrower or credited to the deferral charge.

(h) *Notice Before Repossession, Foreclosure, or Acceleration.* (1) Except in the case of abandonment or other extreme circumstances, no action to repossess or foreclose, or to accelerate payment of the entire outstanding balance of the obligation, may be taken against the debtor until 30 days after the creditor sends the debtor a notice of default in the form set forth in paragraph (h)(2) of this section. Such notice shall be sent by registered or certified mail with return receipt requested. In the case of default on payments, the sum stated in the notice may only include payments in default and applicable late or deferral charges. If the debtor cures the default within 30 days of the postmark of the notice and subsequently defaults a second time, the creditor shall again give notice as described above. The debtor is not entitled to notice of default more than twice in any one-year period.

(2) The notice in the following form shall state the nature of the default, the action the debtor must take to cure the default, the creditor's intended actions upon failure of the debtor to cure the default, and the debtor's right to redeem under state law.

TO: _____

DATE: _____, 19____

Notice of Default and Right To Cure Default

Name, address, and telephone number of creditor _____

Account number, if any _____

Brief identification of credit transaction _____

You are now in default on this credit transaction. You have a right to correct this default within 30 days from the postmarked date of this notice.

If you correct the default, you may continue with the contract as though you did not default. Your default consists of: _____

Describe default alleged _____

Cure of default: Within 30 days from the postmarked date of this notice, you may cure your default by (describe the acts necessary for cure, including, if applicable, the amount of payment required, including itemized delinquency or deferral charges).

Creditor's rights: If you do not correct your default in the time allowed, we may exercise our rights against you under the law by (describe action creditor intends to take).

If you have any questions, write (the creditor) _____ at the above address or call (creditor's designated employee) _____ at (telephone number) _____ between the hours of _____ and _____ on (state days of week) _____.

If this default was caused by your failure to make a payment or payments, and you want to pay by mail, please send a check or money order; do not send cash.

(Sec. 501, Pub. L. 96-221, 94 Stat. 161)

By the Federal Home Loan Bank Board.

J. J. Finn,

Secretary.

[FR Doc. 80-19537 Filed 6-27-80; 8:45 am]

BILLING CODE 6720-01-M

DEPARTMENT OF TRANSPORTATION

Federal Aviation Administration

14 CFR Part 39

[Docket No. 80-SO-20; Amdt. No. 39-3810]

Airworthiness Directives; Piper Model PA-28, -32, -34, -44 Series Airplanes

AGENCY: Federal Aviation Administration (FAA), DOT.

ACTION: Final rule.

SUMMARY: This amendment adopts a new Airworthiness Directive (AD) which requires changes to the radio wiring on certain Piper PA-28, -32, -34 and -44 airplanes. This AD is needed to prevent disruption of radio communication on the affected aircraft and to prevent loss of use of the selected frequency on all other aircraft in the vicinity. This AD is in two parts. Part (a) requires certain wiring disconnection as temporary action pending incorporation of Part (b) which provides for audio system modification.

DATES: Effective on July 1, 1980.

Part (a), compliance required within the next ten (10) hours operation, until Part (b) of this AD is accomplished. Part (b), compliance required not to exceed 100 hours, time in service.

ADDRESSES: Piper Service Bulletin No. 681 may be obtained from Piper Aircraft Corporation, Lock Haven, Pennsylvania 17745, telephone (707) 748-6711.

A copy of the service bulletin is also contained in Rules Docket Room 275, Engineering and Manufacturing Branch, FAA, Southern Region, 3400 Norman Berry Drive, East Point, Georgia.

FOR FURTHER INFORMATION CONTACT: W. H. Trammell, Aerospace Engineer, Engineering and Manufacturing Branch, FAA, Southern Region, P.O. Box 20636, Atlanta, Georgia 30320, telephone (404) 763-7791.

SUPPLEMENTARY INFORMATION: There have been eleven reports of the transmitter remaining in the transmit mode when the push-to-talk switch is released on certain Piper PA-28, -28R, -28RT, -32, -32R, -32RT, -34 and -44 series airplanes. This prevents any further use of the aircraft transmitters and the use of the selected frequency by other aircraft in the vicinity. Since this condition is likely to exist or develop on other airplanes of the same type design, and AD is being issued which requires modifications of the audio system on certain Piper PA-28, -28R, -28RT, -32, -32RT, -34 and -44 series airplanes.

Since a situation exists that requires the immediate adoption of this regulation, it is found that notice and public procedure hereon are impractical and good cause exists for making this amendment effective in less than 30 days.

Adoption of the Amendment

Accordingly, pursuant to the authority delegated to me by the Administrator, § 39.13 of Part 39 of the Federal Aviation Regulations (14 CFR 39.13) is amended by adding the following new Airworthiness Directive:

Piper Aircraft Corporation. Applies to the following airplanes certificated in all categories equipped with Bendix, King or Narco transmitters with factory installed control wheel push-to-talk switches:

Models Affected and Serial Numbers Affected

PA-28-161, Warrior II—28-7816001 through 28-8016289

PA-28-181, Archer II—28-7890001 through 28-8090266

PA-28-201T, Turbo Dakota—28-7921001 through 28-7921091

PA-28-236, Dakota—28-7911001 through 28-8011096

PA-28R-201, Arrow III—28R-7837001 through 28R-7837317

PA-28RT-201, Arrow IV—28R-7918001 through 28R-8018049

PA-28R-201T, Turbo Arrow III—28R-7803001 through 28R-7803373

PA-28RT-201T, Turbo Arrow IV—28R-7931001 through 28R-8031074

PA-32-260, Six—32-7800001 through 32-7800008

PA-32-300, Six 300—32-7840001 through 32-7940290

PA-32-301, Saratogo—32-8006001 through 32-8006015

PA-32-301T, Turbo Saratogo—32-8024001 through 32-8024007

PA-32R-300, Lance—32-7880001 through 32-7880068

PA-32RT-300, Lance II—32R-7885001 through 32R-7985105

PA-32RT-300T, Turbo Lance II—32R-7787001 through 32R-7987126
PA-32R-301, Saratoga SP—32R-8013001 through 32R-8013071
PA-32R-301T, Turbo Saratoga SP—32R-8029001 through 32R-8029068
PA-34-200T, Seneca II—34-7870001 through 34-8070150
PA-44-180, Seminole—44-7995001 through 44-8095020

Compliance is required as indicated unless already accomplished to prevent disruption of radio communication.

(a) Within the next 10 hours time in service after the effective date of this AD, comply with the following:

(1) Locate the audio adapter connector in the main radio harness behind the radio stack. This is the interconnect for individual radios in the audio selector panel.

(2) Locate the muting relay plug in this connector. It is a three (3) pin plug containing wires ASP-1, ASP-2, and ASP-3 and is positioned at one end of the adapter connector.

(3) Disconnect the muting relay plug and attach securely to the harness in accordance with Advisory Circular AC43.13-1A.

(4) Conduct complete operational check of all radios.

(5) Make a maintenance record entry.

(b) Within the next 100 hours time in service after the effective date of this AD, comply with the following:

(1) On PA-32-260, PA-32-300, PA-32-301, PA-32-301T, PA-32R-300, PA-32RT-300, PA-32RT-300T, PA-32R-301, PA-32R-301T and PA-34-200T model aircraft gain access by removing four (4) screws from the speaker grille ring. On all other affected models, gain access by lowering the overhead dome panel.

(2) Remove the 22 mfd capacitor, part number 454-045, soldered to the muting relay, noting polarity, and install diode as shown in figure 1. Diode is not required on Bendix avionics systems.

(3) Reconnect the muting relay plug and conduct radio check for proper operation.

(4) Make a maintenance record entry.

Piper Service Bulletin No. 681 applies to the same subject.

Any equivalent method of compliance with this Airworthiness Directive may be approved by the Chief, Engineering and Manufacturing Branch, FAA, Southern Region.

This amendment becomes effective July 1, 1980.

(Secs. 313(a), 601, and 603, Federal Aviation Act of 1958, as amended (49 U.S.C. 1354(a), 1421, and 1423); Sec. 6(c), Department of Transportation Act (49 U.S.C. 1655(c)); 14 CFR 11.89)

Note.—The FAA has determined that this document involves a regulation which is not significant under Executive Order 12044 as implemented by DOT Regulatory Policies and Procedures (44 FR 11034; February 26, 1979). A copy of the final evaluation prepared for this action is contained in the regulatory docket. A copy of it may be obtained by contacting the person identified above under the caption "For further information contact."

Issued in East Point, Georgia, on June 16, 1980.

Louis J. Cardinali,
Director, Southern Region.

BILLING CODE 4910-13-M

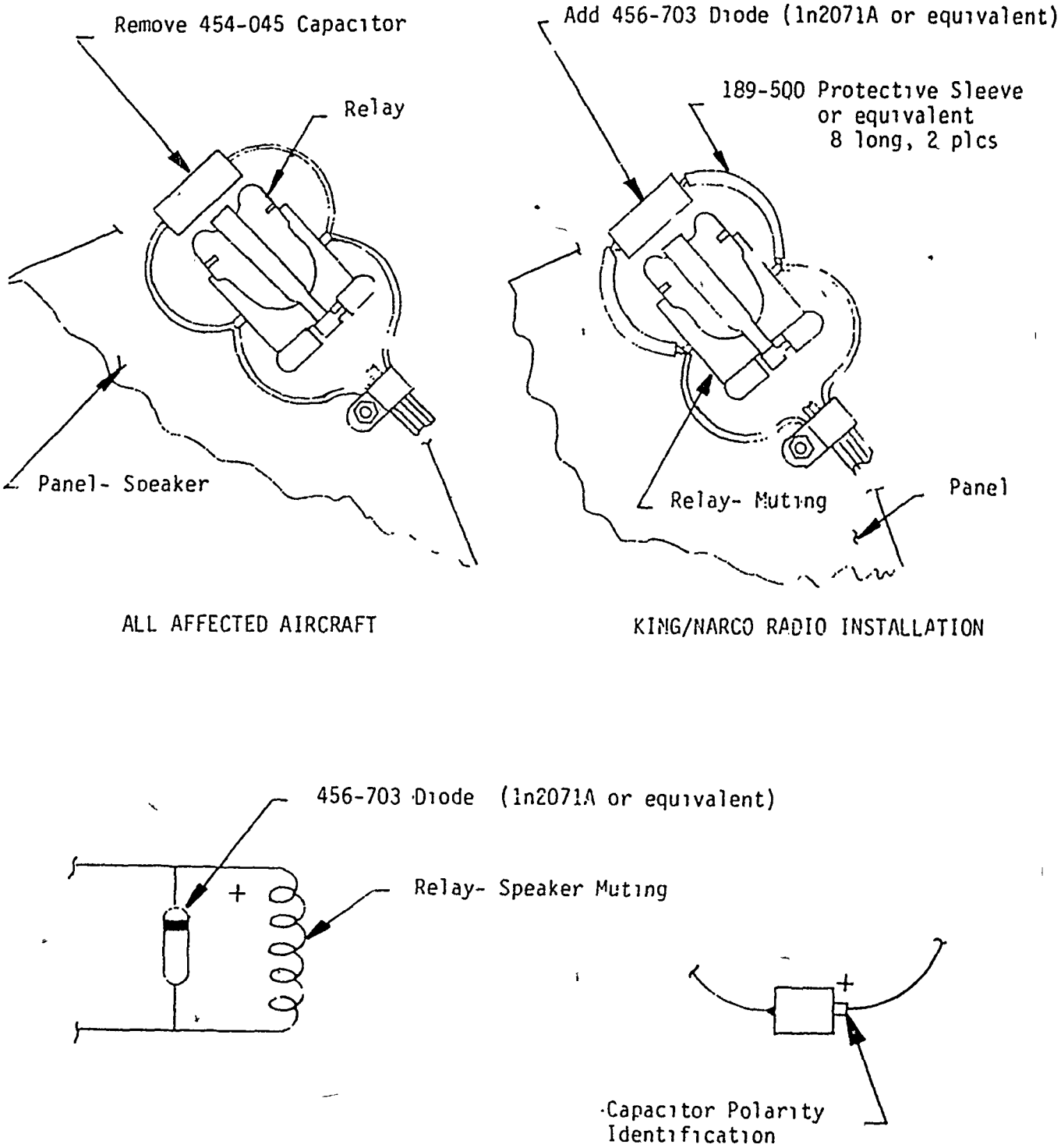

FIGURE 1.

[FR Doc. 80-19548 Filed 6-27-80; 8:45 am]
BILLING CODE 4910-13-C

14 CFR Part 39

[Docket No. 80-WE-8-AD; Amdt. 39-3811]

Airworthiness Directives; McDonnell Douglas Model DC-10 Series Airplanes

AGENCY: Federal Aviation Administration (FAA) DOT.

ACTION: Final rule.

SUMMARY: This amendment adopts a new Airworthiness Directive (AD) that requires modification of the ramp assembly on certain Air Cruisers Company evacuation systems installed on McDonnell Douglas Model DC-10 Series Airplanes. The AD is prompted by reports of three instances of overwing slide/raft improper deployment which could result in unavailability of that element of the evacuation system.

DATE: Effective August 30, 1980.

Compliance schedule—As prescribed in the body of the AD.

ADDRESSES: The applicable service information may be obtained from:

Air Cruisers Company, Post Office Box 180, Belmar, New Jersey 07719.

Also, a copy of the service information may be reviewed at, or a copy obtained from:

Rules Docket in Room 916, FAA, 800 Independence Avenue, S.W., Washington, D.C. 20591, or

Rules Docket in Room 6W14, FAA Western Region, 15000 Aviation Boulevard, Hawthorne, California 90261.

FOR FURTHER INFORMATION CONTACT: Jerry Presba, Executive Secretary, Airworthiness Directive Review Board, Federal Aviation Administration, Western Region, P.O. Box 92007, World Way Postal Center, Los Angeles, California 90009. Telephone: (213) 536-6351.

SUPPLEMENTARY INFORMATION: A proposal to amend Part 39 of the Federal Aviation Regulations to adopt a new airworthiness directive to require modification of the ramp assembly on certain Air Cruisers Company evacuation systems installed on DC-10 aircraft was published in the Federal Register at 45 FR 18026. The proposal was prompted by the events discussed below:

During production test deployments of Air Cruisers Company slide/raft evacuation systems installed at the No. 3 door on the McDonnell Douglas Model DC-10 aircraft, three units deployed improperly over the leading edge of the wing between the engine nacelle and the fuselage, rendering the escape device unuseable. Upon investigation it was determined that the mistracking was due to a delay in the separation of the velcro tracking restraint device which is designed to provide proper tracking of the ramp along the wing surface. It was further determined that the force required to disengage the velcro can vary depending upon the degree of engagement between the mating hook and pile panels of the device. To establish a consistent breakaway force for the tracking device and thus assure proper tracking of the ramp during deployment of the evacuation system, a new tracking device has been developed which utilizes a frangible link assembly which separates consistently at a predetermined force within a tighter tolerance range than the velcro configuration.

Interested persons have been afforded an opportunity to participate in the making of this amendment. One commentor felt that the 18 month compliance time was unduly long. The FAA does not agree. The normal overhaul cycle for the slide/rafts is three years. Consequently, any required modifications which must be accomplished in less than this time will require some degree of acceleration of this schedule on certain affected units. An 18 month compliance time is considered appropriate in light of past service experience and commensurate with the interests of safety. Another comment was received concurring with the proposal.

After careful review of all available data, including the comments above, the FAA has determined that sufficient evidence exists in the public interest in aviation safety to adopt the proposed rule with an editorial change correcting the date of the applicable service bulletin.

Adoption of the Amendment

Accordingly, pursuant to the authority delegated to me by the Administrator, § 39.13 of Part 39 of the Federal Aviation Regulations (14 CFR 39.13) is amended, by adding the following new airworthiness directive:

McDonnell Douglas: Applies to McDonnell Douglas Model DC-10-10, -10F, -30, -30F and -40 Series Airplanes certificated in all categories utilizing Air Cruisers Part No. 24D30051 series passenger evacuation systems with the following serial numbers:

Left Hand Door: Air Cruisers Company P/N 24D30051 series, all serial numbers prior to S/N 1531, except 1506, 1510, 1511, 1515, 1519, 1521, 1523 and 1525.

Right Hand Door: Air Cruisers Company P/N 24D30051 series, all serial numbers prior to S/N 1630, except 1605, 1611, 1613, 1615, 1619, 1621 and 1623.

Compliance required within next eighteen (18) calendar months after the effective date of this AD, unless already accomplished.

To prevent improper deployment of the Air Cruisers Company emergency evacuation system due to delay in separation of the velcro tracking restraint device, accomplish the following:

a. Modify the affected evacuation system assemblies in accordance with Part 2, Accomplishment Instructions, of Air Cruisers Company Service Bulletin No. 25-75 dated January 24, 1980.

b. Special flight permits may be issued in accordance with FAR 21.197 and 21.199 to operate airplanes to a base for the accomplishment of modifications required by this AD.

c. Alternative modifications or other actions which provide an equivalent level of safety may be used when approved by the Chief, Aircraft Engineering Division, FAA Western Region.

This amendment becomes effective August 30, 1980.

(Secs. 313(a), 601, and 603, Federal Aviation Act of 1958, as amended (49 U.S.C. 1354(a), 1421, and 1423); Sec. 6(c) Department of Transportation Act (49 U.S.C. 1655(c)); and 14 CFR 11.89)

Note.—The FAA has determined that this document involves a final regulation which is not considered to be significant under Executive Order 12044 as implemented by DOT Regulatory Policies and Procedures (44 FR 11034; February 26, 1979).

Issued in Los Angeles, California on June 13, 1980.

W. R. Frehse,

Acting Director, FAA Western Region.

[FR Doc. 80-19552 Filed 6-27-80; 8:45 am]

BILLING CODE 4910-13-M

14 CFR Part 39

[Docket No. 80-SO-25; Amdt. No. 39-3805]

Airworthiness Directives; Piper PA-31, PA-31-300, PA-31-325, and PA-31-350 Series Airplanes

AGENCY: Federal Aviation Administration (FAA), DOT.

ACTION: Final rule.

SUMMARY: This amendment adopts a new Airworthiness Directive (AD) which requires the inspection, reinforcement and, if necessary, repair of the outboard flap tracks on certain Piper PA-31, PA-31-300, PA-31-325 and PA-31-350 series airplanes. The AD is prompted by reports of cracks in the outboard flap track attachment angles which could result in operational interference and loss of control of the aircraft.

DATE: Effective June 30, 1980.

Compliance required within the next 50 hours time in service after the effective date of this AD, unless already accomplished.

ADDRESSES: The applicable service bulletin may be obtained from Piper Aircraft Corporation, Lock Haven Division, Lock Haven, Pennsylvania 17745, (707) 748-6711.

A copy of the service bulletin is also contained in the Rules Docket, Room 275, Engineering and Manufacturing Branch, FAA, Southern Region, 3400 Norman Berry Drive, East Point, Georgia.

FOR FURTHER INFORMATION CONTACT: Tom Rice, ASO-212, Engineering and Manufacturing Branch, FAA, Southern Region, P.O. Box 20636, Atlanta, Georgia 30320, telephone (404) 763-7407.

SUPPLEMENTARY INFORMATION: There have been reports of cracks occurring in the outboard flap track attachment angles, wing rib flange, and rear spar web in the area of Wing Station 147.5 on certain Piper PA-31, PA-31-300, PA-31-325 and PA-31-350 series airplanes, which could result in operational interference and loss of control of the airplane. Since this condition is likely to exist or develop on other airplanes of the same type design, an Airworthiness Directive is being issued which requires inspection and reinforcement of the outboard flap tracks, and, if necessary, repair of the outboard flap track, wing rib flange, and rear spar web on certain Piper PA-31, PA-31-300, PA-31-325 and PA-31-350 series airplanes.

Since a situation exists that requires the immediate adoption of this regulation, it is found that notice and public procedure hereon are impracticable and good cause exists for making this amendment effective in less than 30 days.

Adoption of the Amendment

Accordingly, pursuant to the authority delegated to me by the Administrator, § 39.13 of Part 39 of the Federal Aviation Regulations (14 CFR 39.13) is amended by adding the following new Airworthiness Directive (AD):

Piper Aircraft Corporation: Applies to the following Piper models of airplanes certificated in all categories: PA-31, PA-31-300, and PA-31-325, S/N 31-2 through 31-8012010; and PA-31-350, S/N 31-5001 through 31-8052025.

Compliance is required within the next 50 hours time in service after the effective date of this AD unless already accomplished.

To prevent cracking of the outboard flap tracks, wing rib flanges, and rear spar web, accomplish the following:

(a) Using 10 power magnification, inspect for cracks in the area of Wing Station 147.5 flap attach point on both wings as follows:

(1) Lower the flaps to 40°.

(2) Inspect the attachment of the flap track rib to the rear spar on the inboard and outboard sides of the flap track.

(3) Remove the rectangular access plate, from the bottom wing skin, located forward of the wing spar at Wing Station 153.

(4) Employing the Wing Station 153 Access Hole, inspect the Wing Station 147.5 rib attachment angle.

(b) If any cracks are found, prior to further flight, modify and repair the outboard flap tracks, wing rib flanges, and rear spar web on both wings in the area of Wing Station 147.5 in accordance with Piper Aircraft Service Bulletin No. 647, dated May 14, 1980, or in an equivalent manner approved by the Chief, Engineering and Manufacturing Branch, FAA, Southern Region.

(c) The airplane may be flown in accordance with FAR 21.197 and FAR 21.199 to a base where the modification and repair can be performed.

(d) If no cracks are found, repeat the inspection in paragraph (a) every 50 hours time in service until modified in accordance with Piper Aircraft Corporation Service Bulletin No. 647, dated May 14, 1980, or in an equivalent manner approved by the Chief, Engineering and Manufacturing Branch, FAA, Southern Region.

(e) Make appropriate maintenance record entry.

This amendment becomes effective June 30, 1980.

(Secs. 313(a), 601, and 603, Federal Aviation Act of 1958, as amended (49 U.S.C. 1354(a), 1421, and 1423); Sec. 6(c), Department of Transportation Act (49 U.S.C. 1655(c)); 14 CFR 11.89.)

Note.—The FAA has determined that this document involves a regulation which is not significant under Executive Order 12044, as implemented by DOT Regulatory Policies and Procedures (44 FR 11034; February 26, 1979). A copy of the final evaluation prepared for this action is contained in the regulatory docket. A copy of it may be obtained by contacting the person identified above under the caption "For further information contact."

Issued in East Point, Georgia, on June 11, 1980.

Louis J. Cardinali,
Director, Southern Region.

[FR Doc. 80-19553 Filed 6-27-80; 8:45 am]
BILLING CODE 4910-13-M

---

14 CFR Part 39

[Docket No. 80-SO-27; Amdt. No. 39-3819]

Airworthiness Directives; Piper Model PA-28 and PA-32 Series Airplanes

AGENCY: Federal Aviation Administration (FAA), DOT.

ACTION: Final rule.

SUMMARY: This amendment adopts a new Airworthiness Directive (AD) which requires the modification of the throttle linkage on certain Piper Model PA-28 and PA-32 series airplanes. The AD is prompted by reports of separation of the throttle control cable rod end from the throttle arm on certain PA-28-181, PA-32-300 and PA-32R-300 airplanes, and rod and binding and possible subsequent cable failure on certain PA-28-181 airplanes which could result in the loss of power control.

DATE: Effective July 10, 1980.

Compliance required within the next 50 hours time in service after the effective date of this AD unless already accomplished.

ADDRESSES: The applicable service bulletins may be obtained from Piper Aircraft Corporation, 820 E. Bald Eagle Street, Lock Haven, Pennsylvania 17745.

A copy of each of the pertinent service bulletins is also contained in the Rules Docket, Room 275, Engineering and Manufacturing Branch, FAA, Southern Region, 3400 Norman Berry Drive, East Point, Georgia.

FOR FURTHER INFORMATION CONTACT: R. C. Padgett, ASO-214, Engineering and Manufacturing Branch, FAA, Southern Region, P.O. Box 20636, Atlanta, Georgia 30320, telephone (404) 763-7435.

SUPPLEMENTAL INFORMATION: There have been reports of loose, broken and separated throttle cables resulting in loss of engine power control on certain Piper Model PA-28 and PA-32 series airplanes. Since this condition is likely to exist or develop on other airplanes of the same type design, an Airworthiness Directive is being issued which requires reindexing the throttle arm on certain Model PA-28 series airplanes, and replacement of the throttle rod end fasteners on certain Model PA-28 and PA-32 series airplanes.

Since a situation exists that requires the immediate adoption of this regulation, it is found that notice and public procedure hereon are impracticable and good cause exists for making this amendment effective in less than 30 days.

Adoption of the Amendment

Accordingly, pursuant to the authority delegated to me by the Administrator, § 39.13 of Part 39 of the Federal Aviation Regulations (14 CFR 39.13) is amended by adding the following new Airworthiness Directive:

Piper Aircraft Corporation. Applies to Model PA-28-181, serial numbers 28-7790032 through 28-8090227; Model PA-32-300, serial numbers 32-7640001 through 32-7740032 and Model PA-32R-300, serial numbers 32R-7680001 through 32R-7780148 airplanes certificated in all categories.

Compliance required within the next 50 hours time in service after the effective date of this AD, unless already accomplished.

To prevent separation of the throttle control cable rod end from the throttle arm on the affected Models PA-28 and PA-32 airplanes, and rod end binding with possible subsequent throttle cable failure on the affected Model PA-28 airplanes, accomplish the following.

(a) For the Model PA-32-300 and PA-32R-300 series airplanes, replace the throttle linkage connecting hardware in accordance with the instructions contained in Piper Service Bulletin No. 537, dated January 12, 1977.

(b) For the Model PA-28-181 airplanes, modify the throttle linkage in accordance with the instructions listed in the "Throttle Linkage Modification Kit," Piper Part Number 764-009V.

Note.—Piper Service Bulletin No. 679 pertains to this subject.

(c) Make an appropriate maintenance record entry. An equivalent method of compliance may be approved by the Chief, Engineering and Manufacturing Branch, Federal Aviation Administration, Southern Region.

This amendment is effective July 10, 1980.

(Secs. 313(a), 601, and 603, Federal Aviation Act of 1958, as amended (49 U.S.C. 1354(a), 1421, and 1423); Sec. 6(c), Department of Transportation Act (49 U.S.C. 1655(c)); 14 CFR 11.89)

Note.—The FAA has determined that this document involves a regulation which is not significant under Executive Order 12044, as implemented by DOT Regulatory Policies and Procedures (44 FR 11034; February 26, 1979). A copy of the final evaluation prepared for this action is contained in the regulatory docket. A copy of it may be obtained by contacting the person identified above under the caption "For further Information contact."

Issued in East Point, Georgia, on June 19, 1980.

Louis J. Cardinali,

Director, Southern Region.

[FR Doc. 80-19555 Filed 6-27-80; 8:45 am]

BILLING CODE 4910-13-M

---

14 CFR Part 39

[Docket No. 80-SO-18; Amdt. No. 39-3818]

Airworthiness Directives; Piper Model PA-32 Series Airplanes

AGENCY: Federal Aviation Administration (FAA), DOT.

ACTION: Final rule.

SUMMARY: This amendment adopts a new Airworthiness Directive (AD) which requires the modification of the fuel tank vents and the replacement of the fuel tank vent connector hoses on certain Piper Model PA-32 series airplanes. The AD is prompted by reports of broken fuel tank vent hoses which have resulted in fuel leakage and the presence of fuel vapors in the cabin causing a potential fire hazard.

DATES: Effective July 10, 1980. Compliance required within the next 50 hours time in service after the effective date of this AD unless already accomplished.

ADDRESSES: The applicable service bulletin may be obtained from Piper Aircraft Corporation, 820 E. Bald Eagle Street, Lockhaven, Pennsylvania 17745.

A copy of the Service Bulletin is also contained in the Rules Docket, Room 275, Engineering and Manufacturing Branch, FAA, Southern Region, 3400 Norman Berry Drive, East Point, Georgia.

FOR FURTHER INFORMATION CONTACT: R. C. Padgett, Engineering and Manufacturing Branch, Flight Standards Division, FAA, Southern Region, P.O. Box 20636, Atlanta, Georgia 30320, telephone (404) 763-7435.

SUPPLEMENTARY INFORMATION: There have been reports of broken and deteriorated fuel vent connector hoses which resulted in fuel leaking in the wing and draining to the wing root on certain Piper Model PA-32 series airplanes. This condition causes fuel fumes in the cabin and results in a potential fire hazard. Since this condition is likely to exist or develop in other airplanes of the same type design, an Airworthiness Directive is being issued which requires the modification of the fuel tank vent system by modifying certain fuel tank vent lines and replacing the fuel vent connector hoses with an improved hose on certain Piper Model PA-32 series airplanes.

Since a situation exists that requires immediate adoption of this regulation, it is found that notice and public procedure hereon are impracticable and good cause exists for making this amendment effective in less than 30 days.

Adoption of the Amendment

Accordingly, pursuant to the authority delegated to me by the Administrator, § 39.13 of Part 39 of the Federal Aviation Regulations (14 CFR 39.13) is amended by adding the following new Airworthiness Directive (AD):

Piper Aircraft Corporation. Applies to Model PA-32-260, serial numbers 32-7800001 through 32-7800008; PA-32-300, serial numbers 32-7740109 through 32-7940290; PA-32R-300, serial numbers 32R-7780215 through 32R-7880068; Model PA-32RT-300, serial numbers 32R-7885001 through 32R-7985105; and Model PA-32RT-300T, serial numbers 32R-7787001, and 32R-7887002 through 32R-7987126 airplanes certificated in all categories.

Compliance required within the next 50 hours time in service after the effective date of this AD unless already accomplished.

To prevent fuel leakage and potential fire hazard, accomplish the following:

(a) De-fuel the aircraft in accordance with the Piper Service or Maintenance Manual for the appropriate model aircraft.

(b) Remove the right hand and left hand fuel tanks in accordance with the Piper Service or Maintenance Manual for the appropriate model aircraft.

(c) 1. For Model PA-32-260 series aircraft, serial numbers 32-7800001 through 32-7800008, and PA-32-300 model aircraft, serial numbers 32-7740109 through 32-7840202, modify the fuel tank vent system in accordance with the instructions listed in the "Fuel Tank Vent Modification and Vent Hose Replacement Kit," Piper Part Number 763-934V.

2. For Model PA-32-300 series airplanes, serial numbers 32-7940001 through 32-7940290, Models PA-32R-300, PA-32RT-300 and PA-32RT-300T series airplanes, modify the fuel tank vent system in accordance with the instructions listed in the "Fuel Tank Vent Hose Replacement Kit," Piper Part Number 764-001V.

(d) Reinstall the fuel tanks in accordance with instruction in the appropriate Piper Service or Maintenance Manual.

Note.—Do not allow lines or hoses to twist during installation.

(e) Refuel the aircraft and check for leaks and fuel quantity guage function.

(f) Make an appropriate maintenance record entry.

An equivalent method of compliance may be approved by the Chief, Engineering and Manufacturing Branch, Federal Aviation Administration, Southern Region.

Note.—Piper Service Bulletin 646A pertains to this subject.

This amendment becomes effective July 10, 1980.

(Secs. 313(a), 601, and 603, Federal Aviation Act of 1958, as amended (49 U.S.C. 1354(a), 1421, and 1423); Sec. 6(c), Department of Transportation Act (49 U.S.C. 1655(c)); 14 CFR 11.89)

Issued in East Point, Georgia, on June 19, 1980.

Louis J. Cardinali,

Director, Southern Region.

[FR Doc. 80-19556 Filed 6-27-80; 8:45 am]

BILLING CODE 4910-13-M

---

14 CFR Part 39

[Docket No. 20488; Amdt. 39-3828]

Airworthiness Directives; Britten-Norman (Bembridge) Ltd. Model BN-2A Mark III Series Trislander Airplanes

AGENCY: Federal Aviation Administration (FAA), DOT.

ACTION: Final rule.

SUMMARY: This amendment adopts a new airworthiness directive (AD) which requires an inspection, and repair or replacement as necessary, of the rudder mass balance arm support brackets on

Britten-Norman Model BN-2A Mark III Series Trislander airplanes. Based on reports of corrosion of the rudder mass balance arm support brackets, this AD is required to ensure the integrity of the rudder mass balance assembly and to prevent hazardous rudder flutter.

DATES: Effective July 14, 1980.

Compliance schedule—as prescribed in body of AD.

ADDRESSES: The applicable service bulletin may be obtained from: Product Support Department, Britten-Norman (Bembridge) Ltd., Bembridge—Isle of Wight, England.

A copy of the service bulletin is contained in the Rules Docket, Room 916, 800 Independence Avenue, S.W., Washington, D.C. 20591.

FOR FURTHER INFORMATION CONTACT: D. C. Jacobsen, Chief, Aircraft Certification Staff, AEU-100, Europe, Africa and Middle East Office, Federal Aviation Administration, c/o American Embassy, Brussels, Belgium, Telephone: 513.38.30, or C. Christie, Chief, Technical Standards Branch, AWS-110, Federal Aviation Administration, 800 Independence Avenue, S.W., Washington, D.C. 20591, Telephone: 202-426-8374.

SUPPLEMENTARY INFORMATION: There have been several reports of extensive corrosion of the rudder mass balance arm support brackets on Britten-Norman (Bembridge) Ltd. Model BN-2A Mark III Series Trislander airplanes. Failure of the support bracket could result in loss of the rudder mass balance and hazardous rudder flutter. Since this condition is likely to exist or develop on other airplanes of the same type design, an AD is being issued to require inspection of the support brackets and repair or replacement as necessary to ensure the integrity of the rudder mass balance arms on Model BN-2A Mark III Series Trislander airplanes.

Since a situation exists that requires the immediate adoption of this regulation, it is found that notice and public procedure thereon are impracticable and good cause exists for making this amendment effective in less than 30 days.

Adoption of the Amendment

Accordingly, pursuant to the authority delegated to me by the Administrator, § 39.13 of Part 39 of the Federal Aviation Regulations (14 CFR 39.13) is amended by adding the following new airworthiness directive:

Britten-Norman (Bembridge) Ltd. applies to Model BN-2A Mark III Series Trislander airplanes, certificated in all categories.

Compliance is required as indicated unless already accomplished.

To detect corrosion and to prevent loss of the rudder mass balance arm brackets which could cause hazardous rudder flutter, accomplish the following:

(a) Within the next 25 hours time in service after the effective date of this AD or prior to 2 years since new, whichever occurs later, visually inspect for corrosion the support brackets of the mass balance arms at the top, and on each side, of the rudder in accordance with paragraph "ACTION," of Britten-Norman Service Bulletin BN-2/SB.116, dated June 5, 1978 (hereinafter referred to as the service bulletin), or an FAA-approved equivalent.

(b) If corrosion is found as a result of the inspection required by paragraph (a) of this AD, before further flight, except that the aircraft may be flown in accordance with FAR § 21.197 and FAR § 21.199 to a base where the work can be performed, accomplish either of the following:

(1) Perform the permanent repair as specified in "Rectification—Part 1" of the service bulletin or an FAA-approved equivalent, and thereafter reinspect for corrosion in accordance with paragraph (a) of this AD, at intervals not to exceed 3 years from the date of the repair; or

(2) Perform the temporary repair as specified in "Rectifcation—Part 2" of the service bulletin or an FAA-approved equivalent, and thereafter continue to perform the inspection required by paragraph (a) of this AD, at intervals not to exceed 2 months from the date of the repair, for a maximum of 1 year at which time the permanent repair and inspection required by paragraph (b)(1) of this AD must be accomplished.

(c) If no external corrosion is found as a result of the inspection required by paragraph (a) of this AD, the mass balance arm support brackets may continue in service for a period not to exceed 6 months from the date of the initial inspection, provided that the visual inspection required by paragraph (a) of this AD is repeated at intervals not to exceed 2 months or 200 hours time in service from the last inspection, whichever occurs first, after which the permanent or temporary repairs and inspections of paragraph (b)(1) or (b)(2) must be accomplished.

(d) Prior to the installation of rudders held in stock as spares, accomplish the inspection and repair as necessary in accordance with paragraphs (a) and (b)(1) of this AD.

(e) For purposes of this AD, an FAA-approved equivalent must be approved by the Chief, Aircraft Certification Staff, Federal Aviation Administration, Europe, Africa, and Middle East Office, c/o American Embassy, Brussels, Belgium, Telephone: 513.38.30.

This amendment becomes effective July 14, 1980.

(Secs.313(a), 601, and 603, Federal Aviation Act of 1958, as amended (49 U.S.C. 1354(a), 1421, and 1423); Sec. 6(c), Department of Transportation Act (49 U.S.C. 1655(c)); 14 CFR 11.89)

Note.—The FAA has determined that this document involves a regulation which is not significant under Executive Order 12044, as implemented by Department of Transportation Regulatory Policies and Procedures (44 FR 11034; February 26, 1979). A copy of the final evaluation prepared for this action is contained in the regulatory docket. A copy of it may be obtained by writing to C. Christie, Chief, Technical Standards Branch, AWS-110, Federal Aviation Administration, 800 Independence Avenue, S.W., Washington, D.C. 20591.

Issued in Washington, D.C. on June 20, 1980.

M. C. Beard,

Director of Airworthiness.

[FR Doc. 80-19581 Filed 6-27-80; 8:45 am]

BILLING Code 4910-13-M

---

14 CFR Part 39

[Docket No. 79-NW-43-AD; Amdt. 39-3822]

Airworthiness Directives; Rockwell NA-265-60 and NA-265-80 Airplanes Modified in Accordance With the Raisbeck Group STC SA687NW and STC SA847NW

AGENCY: Federal Aviation Administration (FAA), DOT.

ACTION: Final Rule.

SUMMARY: This Amendment rescinds AD 80-03-03 applicable to Rockwell NA-265-60 and NA-265-80 airplanes modified in accordance with the Raisbeck Group STC SA687NW and STC SA847NW. AD 80-03-03 requires that all airplanes be inspected for poor workmanship on the flap track support structure in the presence of an FAA inspector, and that necessary repairs receive FAA Northwest Region approval. Both these requirements are no longer necessary, because AD 80-04-11 was issued requiring comprehensive inspection and repair as necessary of all Raisbeck modified areas of the airframe.

DATES: Effective date July 9, 1980.

FOR FURTHER INFORMATION CONTACT: Mr. William M. Perrella, Airframe Section, ANW-212, Engineering and Manufacturing Branch, FAA Northwest Region, 9010 East Marginal Way South, Seattle, Washington 98108, telephone (206) 767-2516.

SUPPLEMENTARY INFORMATION: Amendment 39-3680 (45 FR 6922), AD 80-03-03 required inspection and repair of the flap track support structure. An FAA inspector was required to be present during the inspection, and repairs required FAA Northwest Region approval. Subsequently uncovered workmanship problems on other structural parts resulted in AD 80-04-11, which required comprehensive inspections of all Raisbeck modified parts to be conducted at FAA approved facilities and repair approvals to be made by specifically authorized DER's. The scope of the inspections and repairs

required by AD 80-04-11 expanded to encompass the requirements of AD 80-03-03.

Since this amendment relieves a restriction, and imposes no additional burden on any person, it is found that notice and public procedure hereon are unnecessary and the amendment may be made effective in less than 30 days.

Adoption of the Amendment

Accordingly, pursuant to the authority delegated to me by the Administrator, § 39.13 of the Federal Aviation Regulations (14 CFR 39.13) is amended by rescinding Amendment 39-3680 (45 FR 6922), AD 80-03-03.

This amendment becomes effective July 9, 1980.

(Secs 313(a), 601, and 603, Federal Aviation Act of 1958, as amended (49 U.S.C. 1354(a), 1421, and 1423); Sec. 6(c), Department of Transportation Act (49 U.S.C. 1655(c); and 14 CFR 11.89))

Note.—The FAA has determined that this document involves a regulation which is not considered to be significant under the provision of Executive Order 12044, as implemented by Department of Transportation Regulatory Policies and Procedures (44 FR 11034; February 26, 1979).

Issued in Seattle, Washington, on June 19, 1980.

Incorporated by reference provisions in the document were approved by the Director of the Federal Register on June 19, 1967.

Jonathan Howe,

Acting Director, Northwest Region.

[FR Doc. 80-19582 Filed 6-27-80; 8:45 am]

BILLING CODE 4910-13-M

---

14 CFR Part 39

[Docket No. 80-NW-12-AD Amdt. 39-3821]

Airworthiness Directives; Boeing Model 707/720 Series Airplanes

AGENCY: Federal Aviation Administration (FAA), DOT.

ACTION: Final rule.

SUMMARY: This Amendment adopts a new Airworthiness Directive (AD) which requires repetitive inspections of the 707/720 series airplanes nacelle strut diagonal brace in accordance with Boeing Service Bulletin A3364 Revision 1. Cracks have been detected in the diagonal brace end fittings which, if allowed to grow, eventually would reduce the structural capability of the brace which could result in the separation of the engine from the airplane.

DATES: Effective date: July 9, 1980.

Initial compliance: As prescribed in the body of the AD.

ADDRESSES: Boeing Service Bulletins specified in this directive may be obtained upon request to the Boeing Commercial Airplane Company, P.O. Box 3707, Seattle, Washington 98124. These documents may also be examined at FAA Northwest Region, 9010 East Marginal Way South, Seattle, Washington 98108.

FOR FURTHER INFORMATION CONTACT: Mr. Harold N. Wantiez, P.E. Airframe Section, Engineering and Manufacturing Branch, FAA Northwest Region, 9010 East Marginal Way South, Seattle, Washington 98108, telephone (206) 767-2516.

SUPPLEMENTARY INFORMATION:

History

A one-time visual inspection of the nacelle strut diagonal brace and fittings, as required by AD 79-14-04 (44 FR 41176 July 16, 1979), revealed 26 separate cracks being reported by four different operators. Cracks were also found in 32 forward mating fittings located on the wing lower surface. The loss of this strut or its associated fittings would seriously compromise the structural integrity of the nacelle/strut installation. For this reason, mandatory repetitive inspections were considered necessary. This amendment is based upon Notice of Proposed Rulemaking (NPRM) (45 FR 26078 April 17, 1980). It was proposed that an AD be issued which would require a repetitive inspection by high frequency eddy current methods of the diagonal brace and its associated fittings in accordance with Boeing Service Bulletin A3364 every 7500 landings.

Public Participation

All interested persons have been given an opportunity to participate in the making of this amendment, and due consideration has been given to all matters presented. The Boeing Commercial Airplane Company commented, and the Air Transport Association of America (ATA) commented on behalf of the principal U.S. operators. British Airways also commented.

Discussion of Comments

The commenters agree with the necessity of a repetitive inspection but disagree with the FAA's proposal to allow only the high frequency eddy current inspection option. They point out that Boeing Service Bulletin A3364 gives three inspection options: high frequency eddy current, low frequency eddy current, and visual, with a different inspection interval specified for each method. The choice of the three options would assist maintenance planning since it would allow the selection of an inspection technique which would accommodate existing maintenance schedules.

Conclusions

As the commenters pointed out, there are advantages in allowing all three inspection options to be used with no compromise of safety. Since the issuance of the NPRM, the FAA has witnessed low frequency eddy current inspections of a cracked fitting/brace combination as well as residual strength tests of a diagonal brace which contained a cracked fitting. The low frequency eddy current inspection successfully located all cracks in the end fittings. The residual strength tests demonstrated cracks could extend to the point they became visually detectable while the brace still retained adequate strength. After a review of the operators comments and in light of the observed testing, the FAA agrees that all three inspection options should be allowed.

The rule will, therefore, require an inspection of the 707/720 series airplanes in accordance with any one of the inspection options given in Boeing Service Bulletin A3364, Revision 1.

Adoption of Amendment

Accordingly, pursuant to the authority delegated to me by the Administrator, § 39.13 of the Federal Aviation Regulations (14 CFR 39.13) is amended by adding the following new airworthiness directive.

Boeing: Applies to all Boeing 707/720 series airplanes with nacelle/strut diagonal braces which have accumulated 7500 or more landings:

A. Within the next 250 landings after the effective date of this Airworthiness Directive (unless already accomplished, on which case see paragraph "C" below), inspect the nacelle strut diagonal brace in accordance with one of the methods described in the accomplishment instructions of Boeing Alert Service Bulletin A3364 Revision 1, dated November 30, 1979, or a later FAA approved revision.

B. Repeat inspections at the following intervals:

Type of inspection performed and repeat inspection with:

Visual—250 landings
Low frequency—2500 landings
High frequency—7500 landings

C. Operators who have, prior to the effective date of this Airworthiness Directive, accomplished inspections in accordance with one of the methods set forth in Boeing Alert Service Bulletin A3364, Revision 1, may utilize the above table in determining when they must next inspect, measuring from time of the inspection already accomplished. In all cases operators are afforded a minimum of

250 landings after the effective date of this AD for initial compliance.

D. If cracks are found, replace the cracked part prior to further flight or repair in a manner approved by the Chief, Engineering and Manufacturing Branch, FAA Northwest Region.

E. Repeat inspections may be suspended for a period not exceeding 12,000 landings after the modification described in paragraph 1C of Boeing Alert Service Bulletin A3364, Revision 1, has been accomplished.

Note.—AD 79-14-04 is superseded by this Amendment.

The manufacturer's specifications and procedures identified and described in this directive are incorporated herein and made a part hereof pursuant to 5 U.S.C. 552(a)(1).

All persons affected by this directive who have not already received these documents from the manufacturer, may obtain copies upon request to Boeing Commercial Airplane Company, P.O. Box 3707, Seattle, Washington 98124. These documents may also be examined at FAA Northwest Region, 9010 East Marginal Way South, Seattle, Washington 98108.

This amendment becomes effective July 9, 1980.

(Secs. 313(a), 601, and 603, Federal Aviation Act of 1958, as amended (49 U.S.C. 1354(a), 1421, and 1423); Sec. 6(c), Department of Transportation Act (49 U.S.C. 1655(c); and 14 CFR 11.89))

Note.—The FAA has determined that this document involves a regulation which is not considered to be significant under the provision of Executive Order 12044, as implemented by Department of Transportation Regulatory Policies and Procedures (44 FR 11034; February 26, 1979).

Issued in Seattle, Washington, on June 19, 1980.

The incorporation by reference provisions in the document were approved by the Director of the Federal Register on June 19, 1967.

Jonathan Howe,

Acting Director, Northwest Region.

[FR Doc. 80-19583 Filed 6-27-80; 8:45 am]

BILLING CODE 4910-13-M

---

14 CFR Part 39

[Docket No. 80-NW-5-AD; Amdt. 39-3823]

Airworthiness Directives; Boeing Model 727-200 Series Airplanes

AGENCY: Federal Aviation Administration (FAA), DOT.

ACTION: Final rule.

SUMMARY: This amendment adopts an Airworthiness Directive (AD) that requires operators of 727-200 series airplanes to replace and reroute certain wire bundles located in close proximity to the air flow multiplier hot air duct located in the air conditioning bay. This change is necessary because wire insulation failures due to high ambient temperatures have occurred, resulting in cabin depressurization (one occurrence), fuel pump stoppage (six occurrences), and an engine flame out (one occurrence).

DATES: Effective date July 10, 1980.

Compliance time as described in the body of this AD.

ADDRESS: The Boeing service bulletin specified in this directive may be obtained upon request to Boeing Commercial Airplane Company, P.O. Box 3707, Seattle, Washington 98124. This document may also be examined at FAA Northwest Region, 9010 East Marginal Way South, Seattle, Washington 98108.

FOR FURTHER INFORMATION CONTACT: Mr. Gary D. Lium, Systems and Equipment Section, ANW-213, Engineering and Manufacturing Branch, FAA Northwest Region, 9010 East Marginal Way South, Seattle, Washington 98108, telephone (206) 767-2500.

SUPPLEMENTARY INFORMATION:

History

A Notice of Proposed Rulemaking (NPRM) was issued on March 3, 1980 (45 FR 13771). The rule as proposed would have required all operators of 727 series airplanes to replace and reroute certain wire bundles located in close proximity to the air flow multiplier hot air duct located in the air conditioning bay. This change was considered necessary because wire insulation failures due to high ambient temperatures have caused cabin depressurization (one occurrence), fuel pump stoppage (six occurrences), and an engine flame out (one occurrence).

Public Participation and Discussion of Comments

All interested persons have been given an opportunity to participate in the making of this amendment, and due consideration has been given to all matters presented.

Many commenters correctly pointed out that only the 727-200 series airplanes are affected by this AD, since only the -200 series airplanes have the air flow multiplier hot air ducts. Boeing stated that they would revise their service bulletin to reflect this fact.

This proposed rule requires two separate actions: replacement of specified wires with high temperature wires, and rerouting of these wires to provide increased clearance from the hot ducts. No commenters opposed the requirement for wire replacement, and in most cases wire replacement had already begun prior to publication of the NPRM. However, three of the eleven commenters claimed that rerouting is not necessary once the wires are replaced. One commenter is covering the affected wires with a high temperature protective tubing as an alternate to wire relocation. This procedure, however, has not been evaluated by the FAA as an acceptable alternate to relocation.

The FAA feels that the existing wire location is unacceptable for two reasons: (1) The wiring is not installed in accordance with good practice (reference AC 43.13-1A, Paragraph 447 and 448, CAR 4b.601(a) and 4b.606-1(a)), and (2) the Nos. 2 and 3 fuel shutoff valve wires are not separated sufficiently to provide the intended redundancy.

With respect to the compliance time of this AD, one commenter stated that they would comply with the NPRM as published; i.e., 2000 hours time in service or eight months after the effective date of the AD. One commenter suggested a 2200 hour inspection interval, replacement of overheated wires as they are found, with this inspection interval to continue until all affected wires are replaced. Another commenter suggested a similar plan, with a 2800 hour inspection interval and completion of work not to exceed the next D check. Three commenters suggested 3000 hours time in service for completion of this AD. One commenter requested three years for completion, provided an approved inspection program was used. Another commenter suggested 10,000 hours time in service, another requested 15,000 hours or six years, and, finally, one commenter requested a 25,000 hour threshold, with compliance required within 2500 hours or 12 months of that point.

The Boeing service bulletin referenced in the NPRM, 727-21-88, Rev. 1, was dated November 30, 1979. The next revision to this service bulletin, in which the only change was to limit the effectivity of this bulletin to the 727-200 series airplanes, was published by Boeing on May 30, 1980. Nine of the ten operators who commented on this AD stated that they had already begun to modify their airplanes in accordance with the service bulletin.

Service history has shown that this problem is caused by the slow deterioration of wire insulation over a long period of time, and to date has affected only high-time airplanes. Finally, inspections by the operators in compliance with this AD will reveal incipient wire insulation failures. The FAA therefore feels that safety will not be compromised by extending the compliance time to reduce the burden of

the operators, provided an inspection is first accomplished.

Adoption of the Amendment

Accordingly, pursuant to the authority delegated to me by the Administrator, § 39.13 of the Federal Aviation Regulations (14 CFR 39.13) is amended by adding the following new airworthiness directive:

Boeing: Applies to Model 727-200 series airplanes as tabulated in the Boeing service bulletin noted below. Compliance required as indicated. Accomplish the following: (Note.—Airplanes line number 1364 and on have been modified in production to include these changes, and thus are not affected by this AD.)

A. Within the next 300 hours time in service after the effective date of this AD, inspect the wire bundles in the air conditioning bay in accordance with Boeing service bulletin 727-21-88, Rev. 2, dated May 30, 1980, or later FAA approved revisions, or in a manner acceptable to the Chief, Engineering and Manufacturing Branch, FAA Northwest Region. If the specified wire bundles are undamaged, proceed with step B. below. If the specified wire bundles are burned or damaged, before further flight, replace the wires with high temperature wires as specified in the service bulletin. Rerouting of the wires must be accomplished in accordance with B. below.

B. Within the next 4,500 hours time-in-service or eighteen (18) months after the effective date of this AD, whichever comes first, unless already accomplished, replace and relocate the wire bundles in the air conditioning bay in accordance with the Boeing service bulletin described in A. above, or in a manner acceptable to the Chief, Engineering and Manufacturing Branch, FAA Northwest Region.

C. Airplanes may be flown to a maintenance base for repairs or replacements in accordance with FAR 21.197.

The manufacturer's specifications and procedures identified and described in this directive are incorporated herein and made a part hereof pursuant to 5 U.S.C. 552(a)(1). All persons affected by this directive who have not already received these documents from the manufacturer may obtain copies upon request to Boeing Commercial Airplane Company, P.O. Box 3707, Seattle, Wshington 98124. These documents may also be examined at FAA, Northwest Region, 9010 East Marginal Way South, Seattle, Washington 98108.

(Secs. 313(a), 601, and 603, Federal Aviation Act of 1958, as amended (49 U.S.C. 1354(a), 1421, and 1423) Sec. 6(c), Department of Transportation Act (49 U.S.C. 1655(c); and 14 CFR 11.89).

Note.—The FAA has determined that this document involves a regulation which is not considered to be significant under the provisions of Executive Order 12044 and as implemented by Department of Transportation Regulatory Policies and Procedures (44 FR 11034; February 26, 1979).

Issued in Seattle, Washington, on June 20, 1980.

The incorporation by reference provisions in the document were approved by the Director of the Federal Register On June 19, 1967.

Jonathan Howe,

Acting Director, Northwest Region.

[FR Doc. 80-19557 Filed 6-27-80; 8:45 am]

BILLING CODE 4910-13-M

---

14 CFR Part 39

[Docket No. 80NE-13; Amdt. 39-3817]

Sikorsky S-76A Helicopters Certificated in All Categories; Airworthiness Directives

AGENCY: Federal Aviation Administration (FAA), DOT.

ACTION: Final rule.

SUMMARY: This action publishes in the Federal Register and makes effective as to all persons telegraphic airworthiness directive (TAD) T80NE-19, which was previously made effective as to all known operators of the Sikorsky S-76A helicopters certificated in all categories, by individual telegrams. The telegraphic AD required a one-time visual inspection of the main rotor blade tip plate retention bolts and required replacement of suspect bolts. The action was needed to prevent operation with improperly heat treated bolts.

DATES: Effective June 24, 1980, as to all persons except those persons to whom it was made immediately effective by the telegram dated April 3, 1980. Compliance schedule—as prescribed in the body of the AD.

ADDRESSES: Federal Aviation Administration, New England Region, 12 New England Executive Park, Burlington, Massachusetts 01803.

FOR FURTHER INFORMATION CONTACT: Stephen J. Soltis, ANE-212, Engineering and Manufacturing Branch, Flight Standards Division, New England Region, Federal Aviation Administration, 12 New England Executive Park, Burlington, Massachusetts 01803; telephone: (617) 273-7336.

SUPPLEMENTARY INFORMATION: A premature failure of a main rotor blade tip plate retention bolt was experienced during fatigue testing of the main rotor blade tip cap assembly. Examination of the failed bolt revealed that it had been improperly heat treated and did not meet the bolt hardness specification. Subsequent hardness inspection of the NAS 624H6 bolts in stock disclosed several bolts which did not meet the bolt hardness specification. These bolts were found to be manufactured by only one vendor and were marked by the letters CS embossed on the bolt head. The FAA determined that a one-time visual inspection of the tip plate retention bolts and replacement of suspect retention bolts was necessary to prevent operation with improperly heat treated bolts. Therefore, as an interim action, on April 3, 1980, a telegraphic airworthiness directive (TAD) T80NE-19, was issued and made effective immediately to all known United States operators of the Sikorsky S-76A helicopter. This TAD required that, on aircraft with more than 100 hours time in service, the main rotor blade tip plate retention bolts be visually inspected within the next 25 hours time in service. On aircraft with less than 100 hours time in service, the bolts must be inspected before the accumulation of 125 hours time in service. Discrepancy reporting requirements have been deleted in this amendment.

Since it was found that immediate corrective action was required, notice and public procedure thereon were impracticable and contrary to the public interest, and good cause existed for making the AD effective immediately to all known United States operators of Sikorsky model S-76A helicopters by individual telegrams dated April 3, 1980.

Since a situation still exists that requires immediate adoption of the regulation, it is found that notice and public procedure hereon are impracticable, and good cause exists for making this amendment effective in less than 30 days.

Adoption of the Amendment

Pursuant to the authority delegated to me by the Administrator, an AD was adopted and made effective immediately by telegram to all known United States operators of Sikorsky Model S-76A helicopters. These conditions still exist, and the AD, as revised herein, is hereby published in the Federal Register as an amendment to Section 39.13 of Part 39 of the Federal Aviation Regulations (14 CFR 39.13):

Sikorsky Aircraft: Applies to S-76A series helicopters certificated in all categories with P/N 76150-09030 series main rotor blades, blade S/Ns AO-86-00102 through AO-86-00323.

To prevent operation with suspected improperly heat treated bolts in the main rotor blade tip plate attachment joint, accomplish the following:

For 76150-09000 series main rotor blades with more than 100 hours time in service, compliance required within the next 25 hours time in service after June 24, 1980, unless already accomplished.

For 76150-09000 series main rotor blades with less than 100 hours time in service, compliance required before the accumulation

of 125 hours time in service after June 24, 1980, unless already accomplished.

Inspect and replace, as necessary, the four NAS624H6 bolts which mate the 76150-09000 tip plate assembly with the 76150-09030 main rotor blade, in accordance with Sikorsky Alert Service Bulletin No. 76-65-12, Paragraph G, dated April 1, 1980, or an equivalent procedure approved by the Chief, Engineering and Manufacturing Branch, Federal Aviation Administration, New England Region.

Note.—Sikorsky reference noted herein pertains to this AD:

Alert Customer Service Bulletin 76-65-12, dated April 1, 1980.

The manufacturer's specifications and procedures identified and described in this directive are incorporated herein and made a part hereof pursuant to 5 U.S.C. 552(a)(1). All persons affected by this directive, who have not already received these documents from the manufacturer, may obtain copies upon request to Sikorsky Aircraft, Division of United Technologies Corporation, Stratford, Connecticut 06602. These documents may also be examined at FAA, New England Region, 12 New England Executive Park, Burlington, Massachusetts 01803, and at FAA Headquarters, 800 Independence Avenue, S.W., Washington, D.C.

A historical file on this AD is maintained by the FAA at its Headquarters in Washington, D.C., and at the FAA, New England Region Headquarters, Burlington, Massachusetts.

This amendment becomes effective June 24, 1980, as to all persons except those persons to whom it was made immediately effective by the telegram dated April 3, 1980.

(Secs. 313(a), 601, and 603, Federal Aviation Act of 1958, as amended (49 U.S.C. 1354(a), 1421, and 1423); Sec. 6(c), Department of Transportation Act (49 U.S.C. 1655(c)); 14 CFR 11.89.)

Note.—The FAA has determined that this document involves a final regulation which is not considered to be significant under Executive Order 12044 as implemented by DOT Regulatory Policies and Procedures (44 FR 11034; February 26, 1979). In addition, the expected impact is so minimal that this action does not warrant preparation of a regulatory evaluation.

Issued in Burlington, Massachusetts, on June 17, 1980.

Robert E. Whittington,

Director, New England Region.

Note.—The incorporation by reference provisions of this document were approved by the Director of the Federal Register on June 19, 1967.

[FR Doc. 80-19372 6-27-80; 8:45 am]
BILLING CODE 4910-13-M

14 CFR Part 71

[Airspace Docket No. 80-NE-2]

Designation of Federal Airways, Area Low Routes, Controlled Airspace, and Reporting Points; Alteration of Transition areas

AGENCY: Federal Aviation Administration (FAA), DOT.

ACTION: Final rule.

SUMMARY: This amendment alters the Providence, R.I., and the Rhode Island transition areas in order to provide controlled airspace for approaches to Newport State Airport, Middletown, R.I., and in addition, deletes reference to the 1,200 foot transition area as currently described under Providence, R.I. This alteration eliminates duplication of airspace currently described under both the Massachusetts Rhode Island transition areas.

EFFECTIVE DATE: September 4, 1980

FOR FURTHER INFORMATION CONTACT: Lewis W. Still, Airspace Regulations Branch (AAT-230), Airspace and Air Traffic Rules Division, Air Traffic Service, Federal Aviation Administration, 800 Independence Avenue SW., Washington, D.C. 20591, telephone: (202) 426-3715.

SUPPLEMENTARY INFORMATION:

History

On May 12, 1980, the FAA proposed to amend Part 71 of the Federal Aviation Regulations (14 CFR Part 71) to alter the Providence, R.I., and the Rhode Island transition areas (45 FR 31128). This amendment extends the 700 foot transition area at Providence 8 miles south in order to provide controlled airspace for approaches to the new Runway 04 at Newport State Airport, Middletown, R.I. In addition the 1,200 foot transition area is deleted because of duplication in the Rhode Island and Massachusetts 1,200 foot transition area. Interested persons were invited to participate in the rulemaking proceeding by submitting written comments on the proposal to the FAA. The comments received expressed no objections. This amendment is the same as that proposed in the notice. Subpart G of part 71 was republished in the Federal Register on January 2, 1980, (45 FR 445).

The Rule

This amendment to § 71.181 of Part 71 of the Federal Aviation Regulations (14 CFR Part 71) extends the Providence, R.I., transition area to provide controlled airspace approaches to the new Runway 04 at Newport State Airport, Middletown, R.I. Also, the 1,200 foot transition area has been deleted because that area is duplicated in the Rhode Island and Massachusetts 1,200 foot transition areas. This amendment eliminates that duplication.

Adoption of the Amendment

Accordingly, pursuant to the authority delegated to me by the Administrator, § 71.181 of Part 71 of the Federal Aviation Regulations (14 CFR Part 71) as republished (45 FR 445) is amended, effective 0901 GMT, September 4, 1980, as follows:

Under Providence, R.I., the description is amended to read as follows: "That airspace extending upward from 700 feet above the surface within an 8-mile radius of the Theodore Francis Green State Airport, Providence, R.I., (Lat. 41°43'30"N., Long. 71°25'48"W.) within 2 miles each side of the Providence ILS localizer NE course, extending from the 8-mile radius area to the intersection of the Putnam, Conn., VORTAC 106° radial, within 5 miles SE and 8 miles NW of the Providence ILS localizer SW course, extending from the 8-mile radius area to 12 miles SW of the OM, within a 12-miles radius of the Quonset State Airport, Kingston, R.I., (Lat. 41°35'55"N., Long. 71°24'50"W. within a 7-mile radius of the New Bedford, Mass., Municipal Airport (Lat. 41°40'37"N., Long. 70°57'34"W.) within 8 miles SE and 11 miles NW of the New Bedford ILS localizer SW course, extending from the localizer to 12 miles SW of the OM, and within 3 miles each side of the 038° bearing from the New Bedford OM extending from the 7-mile radius to 14.5 miles NE of the New Bedford OM within a 5-mile radius of the Fall River, Mass., Municipal Airport (Lat. 41°43'15"N., Long. 71°06'40"W.) and within 2 miles each side of the 050° bearing from the Fall River, Mass., NDB, extending from the 5-mile radius area to 8 Miles NE of the NDB, and within 3 miles each side of the Island, R.I., NDB 188° bearing extending from the NDB to 8 miles south."

Under Rhode Island, the description is amended to read as follows: "That airspace extending upward from 1,200 feet above the surface within the boundary of the State of Rhode Island including the offshore airspace within 3 NM of and parallel to the shoreline of Rhode Island and that airspace bounded by a line beginning at Lat. 41°25'15"N., Long. 71°04'45"W.; to Sat 41°08'30"N., Long. 71°04'45"W.; to Lat. 41°07'43"N., Long. 71°07'36"W.; to Lat. 41°01'50"N., Long. 71°47'00"W.; to Lat. 41°11'15"N., Long. 71°47'00"W.; thence along a line 3 NM from and parallel to the shoreline to the point of beginning; and that airspace bounded by a line beginning at Lat. 41°11'15"N., Long. 71°47'00"W.; to Lat. 41°01'50'N., Long. 71°47'00"W.; to Lat. 41°00'35'N., Long. 72°05'00"W.; to Lat. 41°12'12"N., Long. 72°21'58"W.; thence easterly via the New York and Connecticut State boundaries to point of beginning.

(Secs. 307(a), 313(a), and 1110, Federal Aviation Act of 1958 (49 U.S.C. 1348(a), 1354(a), and 1510; Executive Order 10854 (24 FR 9565); Sec. 6(c), Department of

Transportation Act (49 U.S.C. 1655(c)); and 14 CFR 11.69.

The FAA has determined that this document involves a regulation which is not significant under Exectutive Order 12044, as implemented by DOT Regulatory Policies and Procedures (44 FR 11034; February 26, 1979). Since this regulatory action involves an established body of technical requirements for which frequent and routine amendments are necessary to keep them operationally current and promote safe flight operations, the anticipated impact is so minimal that this action does not warrant preparation of a regulatory evaluation and a comment period of less than 45 days is appropriate.

Issued in Washington, D.C., on June 20, 1980.

B. Keith Potts,

Acting chief, Airspace and Air Traffic Rules Division.

[FR Doc. 80-19371 Filed 6-27-80; 8:45 am]

BILLING CODE4910-13-M

Designation of Federal Airways, Area Low Routes, Controlled Airspace and Reporting Points

14 CFR Part 71

[Airspace Docket No. 80-NE-24]

Amendment to Descriptions of the Burlington, Vt., 700-Foot Transition Area and Vermont (State) 1,200-Foot Transition Area

AGENCY: Federal Aviation Administration (FAA), DOT.

ACTION: Final rule.

SUMMARY: This amendment revises the descriptions of the Burlington, Vermont, 700-foot transition area and the State of Vermont 1,200-foot transition area.

The designation of the State of Vermont as a 1,200-foot transition area resulted in dual description of airspace. Accordingly, this action is required to delete dual description of controlled air space.

EFFECTIVE DATE: June 30, 1980.

FOR FURTHER INFORMATION CONTACT: Richard G. Carlson, Operations Procedures and Airspace Branch, ANE-536, Federal Aviation Administration, Air Traffic Division, 12 New England Executive Park, Burlington, Massachusetts 01803; telephone (617) 273-7285.

SUPPLEMENTARY INFORMATION: Airspace Docket Number 77-NE-94 designated the State of Vermont as a 1,200-foot transition area. This action resulted in some overlays and dual description of controlled airspace.

As this amendment merely reflects a change in description neither increasing nor decreasing controlled airspace, notice or public procedure hereon are unnecessary, and the amendment may be made effective in less than 30 days.

Adoption of the Amendment

Accordingly, pursuant to the authority delegated to me by the Administrator, the description of the Burlington, Vermont, 700-foot transition area and the State of Vermont 1,200-foot transition area in Subpart G of Part 71.181 of the Federal Aviation Regulations (14 CFR 71) are amended as follows:

1. *Section 71.181 Burlington, Vermont, 700-Foot Transition Area*

Delete,

"* * * that airspace extending upward from 1,200 feet * * *" and all after.

2. *Section 71.181 Vermont (State) 1,200-Foot Transition Area*

"That airspace extending upward from 1,200-feet above the surface within the territorial boundaries of the State of Vermont; and that airspace bounded by a line beginning at 44°00'00"N, and the border of the States of New York and Vermont; to latitude: 44°00'00"N, longitude: 74°35'00"W, to latitude: 44°12'00"N, longitude: 74°54'00"W; to latitude: 44°42'00"N, longitude: 75°05'00"W; to latitude: 44°56'00"N, longitude: 75°05'00"W; thence clockwise along the New York State border to the point of beginning."

(Section 307(a) of the Federal Aviation Act of 1958 (72 Stat. 749; 49 USC 1348(a)) and Section 6(c) of the Department of Transportation Act (49 USC 1655(c) and 14 CFR 11.69))

Note.—The FAA has determined that this document involves a regulation which is not considered to be significant under the procedures and criteria prescribed by Executive Order 12044 and as implemented by Interim Department of Transportation guidelines (43 FR 9582; March 8, 1979). The anticipated impact is so minimal that this action does not warrant preparation of a regulatory evaluation.

Issued in Burlington, Massachusetts, on June 16, 1980.

Robert E. Whittington,

Director, New England Region.

[FR Doc. 80-19373 Filed 6-27-80; 8:45 am]

BILLING CODE 4910-13-M

14 CFR Part 97

[Docket No. 20480; Amdt. No. 1167]

Standard Instrument Approach Procedures; Miscellaneous Amendments

AGENCY: Federal Aviation Administration (FAA), DOT.

ACTION: Final rule.

SUMMARY: This amendment establishes, amends, suspends, or revokes Standard Instrument Approach Procedures (SIAPs) for operations at certain airports. These regulatory actions are needed because of the adoption of new or revised criteria, or because of changes occurring in the National Airspace System, such as the commissioning of new navigational facilities, addition of new obstacles, or changes in air traffic requirements. These changes are designed to provide safe and efficient use of the navigable airspace and to promote safe flight operations under instrument flight rules at the affected airports.

DATES: An effective date for each SIAP is specified in the amendatory provisions.

ADDRESSES: Availability of matters incorporated by reference in the amendment is as follows:

For Examination—

1. FAA Rules Docket, FAA Headquarters Building, 800 Independence Avenue, SW., Washington, D.C. 20591;
2. The FAA Regional Office of the region in which the affected airport is located; or
3. The Flight Inspection Field Office which originated the SIAP.

For Purchase—

Individual SIAP copies may be obtained from:

1. FAA Public Information Center (APA-430), FAA Headquarters Building, 800 Independence Avenue, SW., Washington, D.C. 20591; or
2. The FAA Regional Office of the region in which the affected airport is located.

By Subscription—

Copies of all SIAPs, mailed once every 2 weeks, may be ordered from Superintendant of Documents, U.S. Government Printing Office, Washington, D.C. 20402. The annual subscription price is $135.00.

FOR FURTHER INFORMATION CONTACT: Lewis O. Ola, Flight Procedures and Airspace Branch (AFO-730), Aircraft Programs Division, Office of Flight Operations, Federal Aviation Administration, 800 Independence Avenue SW., Washington, D.C. 20591, telephone (202) 426-8277.

SUPPLEMENTARY INFORMATION: This amendment to Part 97 of the Federal Aviation Regulations (14 CFR Part 97) prescribes new, amended, suspended, or revoked Standard Instrument Approach

Procedures (SIAPs). The complete regulatory description of each SIAP is contained in official FAA form documents which are incorporated by reference in this amendment under 5 U.S.C. § 552(a), 1 CFR Part 51, and § 97.20 of the Federal Aviation Regulations (FARs). The applicable FAA Forms are identified as FAA Forms 8260-3, 8260-4 and 8260-5. Materials incorporated by reference are available for examination or purchase as stated above.

The large number of SIAPs, their complex nature, and the need for a special format make their verbatim publication in the Federal Register expensive and impractical. Further, airmen do not use the regulatory text of the SIAPs, but refer to their graphic depiction on charts printed by publishers of aeronautical materials. Thus, the advantages of incorporation by reference are realized and publication of the complete description of each SIAP contained in FAA form document is unnecessary. The provisions of this amendment state the affected CFR (and FAR) sections, with the types and effective dates of the SIAPs. This amendment also identifies the airport, its location, the procedure identification and the amendment number.

This amendment to Part 97 is effective on the date of publication and contains separate SIAPs which have compliance dates stated as effective dates based on related changes in the National Airspace System or the application of new or revised criteria. Some SIAP amendments may have been previously issued by the FAA in a National Flight Data Center (FDC) Notice to Airmen (NOTAM) as an emergency action of immediate flight safety relating directly to published aeronautical charts. The circumstances which created the need for some SIAP amendments may require making them effective in less than 30 days. For the remaining SIAPs, an effective date at least 30 days after publication is provided.

Further, the SIAPs contained in this amendment are based on the criteria contained in the U.S. Standard for Terminal Instrument Approach Procedures (TERPs). In developing these SIAPs, the TERPs criteria were applied to the conditions existing or anticipated at the affected airports. Because of the close and immediate relationship between these SIAPs and safety in air commerce, I find that notice and public procedure before adopting these SIAPs is unnecessary, impracticable, or contrary to the public interest and, where applicable, that good cause exists for making some SIAPs effective in less than 30 days.

Adoption of the Amendment

Accordingly, pursuant to the authority delegated to me, Part 97 of the Federal Aviation Regulations (14 CFR Part 97) is amended by establishing, amending, suspending, or revoking Standard Instrument Approach Procedures, effective at 0901 G.m.t. on the dates specified, as follows:

1. By amending § 97.23 VOR-VOR/DME SIAPs identified as follows:

. . . Effective September 4, 1980

Cloquet, MN—Cloquet Carlton County, VOR/DME-A, Amdt. 4

. . . Effective August 21, 1980

Louisville, KY—Bowman Field, VOR Rwy 14, Amdt. 5
Louisville, KY—Bowman Field, VOR Rwy 32, Amdt. 11

. . . Effective August 7, 1980

Hawthorne, CA—Hawthorne Muni, VOR Rwy 7, Amdt. 13
Montague, CA—Siskiyou County, VOR-B, Amdt. 2
Oceanside, CA—Oceanside Muni, VOR-A, Amdt. 2
Orlando, FL—Orlando International, VOR Rwy 18L, Amdt. 2
Orlando, FL—Orlando International, VOR/DME Rwy 18L, Amdt. 1
Orlando, FL—Orlando International, VOR Rwy 18R, Amdt. 2
Orlando, FL—Orlando International, VOR/DME Rwy 18R, Amdt. 1
Orlando, FL—Orlando International, VOR/DME Rwy 36L, Amdt. 3
Orlando, FL—Orlando International, VOR/DME Rwy 36R, Amdt. 8
Elberton, GA—Elbert County-Patz Field, VOR/DME Rwy 10, Original
Fort Wayne, IN—Smith Field, VOR Rwy 13, Amdt. 5
Sullivan, IN—Sullivan County VOR/DME-A, Amdt. 5
Flemingsburg, KY—Fleming-Mason, VOR/DME-A, Original
Marshfield, MA—Marshfield, VOR-A, Amdt. 3
Bad Axe, MI—Huron County Memorial, VOR Rwy 3, Amdt. 6
Bad Axe, MI—Huron County Memorial, VOR Rwy 21, Amdt. 5
Grand Rapids, MI—Kent County Intl, VOR Rwy 36, Amdt. 8
Woodbine, NJ—Woodbine Muni, VOR-A, Original
Raton, NM—Crews Field, VOR/DME Rwy 2, Amdt. 3
Dyersburg, TN—Dyersburg Muni, VOR/DME Rwy 4, Original
Union City, TN—Everett-Stewart, VOR/DME-A, Amdt. 5

. . . Effective June 18, 1980

Baltimore, MD—Glenn L. Martin State, VOR Rwy 14, Amdt. 4
Baltimore, MD—Glenn L. Martin State, VOR/DME or TACAN 1, Rwy 14, Amdt. 2

2. By amending § 97.25 SDF-LOC-LDA SIAPs identified as follows:

. . . Effective August 7, 1980

Benton Harbor, MI—Ross Field, LOC BC Rwy 9, Amdt. 5
New Bern, NC—Simmons-Nott, LOC Rwy 4, Amdt. 2
Union City, TN—Everett-Stewart, SDF Rwy 36, Amdt. 1

. . . Effective July 24, 1980

Ocala, FL—Ocala Muni (Jim Taylor Field), LOC Rwy 36, Original

. . . Effective July 10, 1980

Goodland, KS—Renner Fld (Goodland Muni), LOC Rwy 30, Amdt. 2

3. By amending § 97.27 NDB/ADF SIAPs identified as follows:

. . . Effective September 4, 1980

Chariton, IA—Chariton Muni, NDB Rwy 17, Amdt. 1
Cloquet, MN—Cloquet Carlton County, NDB Rwy 17, Amdt. 2
Cloquet, MN—Cloquet Carlton County, NDB Rwy 35, Amdt. 2
Pittsburgh, PA—Greater Pittsburgh Int'l, NDB Rwy 10L, Amdt. 9, canceled

. . . Effective August 7, 1980

Montague, CA—Siskiyou County, NDB-A, Amdt. 4
Mountain Home, ID—Mountain Home Muni, NDB Rwy 26, Original
Sullivan, IN—Sullivan County, NDB Rwy 36, Amdt. 4
Detroit, MI—Detroit Metropolitan Wayne County, NDB Rwy 3C, Amdt. 6
Detroit, MI—Detroit Metropolitan Wayne County, NDB Rwy 3L, Amdt. 6
Grand Rapids, MI—Kent County Int'l, NDB Rwy 26L, Amdt. 14
Raton, NM—Crews Field, NDB Rwy 2, Amdt. 1
Roanoke Rapids, NC—Halifax County, NDB Rwy 5, Amdt. 2
Hartsville, SC—Hartsville Muni, NDB Rwy 20, Amdt. 2
Union City, TN—Everett-Stewart, NDB Rwy 36, Amdt. 1

. . . Effective July 10, 1980

Goodland, KS—Renner Fld (Goodland Muni), NDB Rwy 30, Amdt. 2

. . . Effective June 18, 1980

Baltimore, MD—Glenn L. Martin State, NDB Rwy 14, Amdt. 4
Baltimore, MD—Glenn L. Martin State, NDB Rwy 32, Amdt. 4

4. By amending § 97.29 ILS-MLS SIAPs identified as follows:

. . . Effective August 7, 1980

Orlando, FL—Orlando International, ILS Rwy 18R, Amdt. 1
Orlando, FL—Orlando International, ILS Rwy 36R, Amdt. 3
Detroit, MI—Detroit Metropolitan Wayne County, ILS Rwy 3L, Amdt. 5

Grand Rapids, MI—Kent County Int'l, ILS Rwy 26L, Amdt. 15
New York, NY—LaGuardia, ILS Rwy 13, Original
New York, NY—LaGuardia, ILS Rwy 13, Amdt. 11, cancelled

. . . *Effective July 24, 1980*

Sanford, FL—Sanford, ILS Rwy 9, Original

. . . *Effective July 10, 1980*

Barrow, AK—Wiley Post-Will Rogers Memorial, ILS/DME Rwy 6, Original
Barrow, AK—Wiley Post-Will Rogers Memorial, ILS/DME Rwy 6, Original, cancelled

. . . *Effective June 11, 1980*

Colorado Springs, CO—City of Colorado Springs Muni, ILS Rwy 35, Amdt. 32

5. By amending § 97.31 RADAR SIAPs identified as follows:

. . . *Effective August 7, 1980*

Orlando, FL—Orlando International, RADAR-1, Amdt. 2
Fort Wayne, IN—Fort Wayne Muni (Baer Field), RADAR-1, Amdt. 16
Grand Rapids, MI—Kent County Int'l, RADAR-1, Amdt. 5
Walls, MS—Twinkle Town, RADAR-1, Amdt. 1
San Juan, PR—Puerto Rico Int'l, RADAR-1, Amdt. 1

6. By amending § 97.33 RNAV SIAPs identified as follows:

. . . *Effective August 7, 1980*

Sanford, FL—Sanford, RNAV Rwy 9, Amdt. 8

. . . *Effective June 18, 1980*

Baltimore, MD—Glenn L. Martin State, RNAV Rwy 14, Amdt. 2

(Secs. 307, 313(a), 601, and 1110, Federal Aviation Act of 1958 (49 U.S.C. §§ 1348, 1354(a), 1421, and 1510); Sec. 6(c), Department of Transportation Act (49 U.S.C. § 1655(c)); and 14 CFR 11.49(b)(3).)

Note.—The FAA has determined that this document involves a regulation which is not significant under Executive Order 12044, as implemented by DOT Regulatory Policies and Procedures (44 FR 11034; February 26, 1979). Since this regulatory action involves an established body of technical requirements for which frequent and routine amendments are necessary to keep them operationally current and promote safe flight operations, the anticipated impact is so minimal that this action does not warrant preparation of a regulatory evaluation.

Issued in Washington, D.C. on June 20, 1980.

John S. Kern,
Acting Chief, Aircraft Programs Division.

Note.—The incorporation by reference in the preceding document was approved by the Director of the Federal Register on May 12, 1969.

[FR Doc. 80-19374 Filed 6-27-80; 8:45 am]
BILLING CODE 4910-13-M

DEPARTMENT OF COMMERCE

National Oceanic and Atmospheric Administration

15 CFR Part 911

The U.S. Geostationary Operational Environmental Satellite (GOES) Data Collection System (DCS)

AGENCY: National Oceanic and Atmospheric Administration (NOAA).

ACTION: Final rule: Revision.

SUMMARY: These regulations describe the United States Geostationary Operational Environmental Satellite (GOES) Data Collection System (DCS), which provides NOAA with an effective method for obtaining environmental data from remote locations not adequately served by conventional communications systems. The revised regulations allow, and give guidelines for, use of the GOES DCS by non-NOAA user organizations, which may include United States Federal, State, or local governments or agencies and foreign government agencies whose use of the system would support a program of a United States agency. This revision is necessary to promulgate the information that the system will now be available to the non-NOAA users.

DATE: June 30, 1980.

FOR FURTHER INFORMATION CONTACT: Dr. Clifford A. Spohn, Deputy Director, National Environmental Satellite Service, National Oceanic & Atmospheric Administration, Room 2069, Federal Building 4, Washington, D.C. 20233, 301-763-7190.

SUPPLEMENTARY INFORMATION: The original 15 CFR 911 was written when the satellite data collection system first became available in 1972. The requirement for restatement and clarification of the policy has arisen as a result of intervening experience. The GOES DCS was originally established to provide for the collection of remote data required for the more effective accomplishment of NOAA's programs. Because the system's potential capacity is greater than NOAA's present needs, it has been possible to allow expanded use of the system. Accordingly the final rule is revised to read as presented below.

Dated: June 17, 1980.

Francis J. Balint,
Acting Director, Office of Management & Computer Systems.

PART 911—THE UNITED STATES GEOSTATIONARY OPERATIONAL ENVIRONMENTAL SATELLITE (GOES) DATA COLLECTION SYSTEM (DCS)

Sec.
911.1 General Information
911.2 Guidelines
911.3 Continuation of GOES—DCS
911.4 GOES—DCS Use Agreements

Authority: 5 U.S.C. 552.

§ 911.1 General information.

(a) The GOES Data Collection System (DCS) provides an effective method for obtaining environmental data from remote locations where conventional communications are either absent or inadequate. The use of the DCS is limited to the collection of environmental data in accordance with applicable International Telecommunication Union (ITU) regulations concerning use of the allocated frequency bands.

(b) The DCS was established in 1974 to obtain from remote locations data required for the effective accomplishment of programs of the National Oceanic and Atmospheric Administration in the 1980's. The DCS capacity can more than provide for all of NOAA's present and near future domestic and international requirements. This makes it possible to offer to Federal and State agencies or local governments of the United States, and to those foreign government agencies whose use of the system would support a program of a United States agency the opportunity to make use of the DCS. Policy guidelines are set forth below.

§ 911.2 Guidelines.

(a) Use of the GOES DCS can be authorized only for the purpose of collecting environmental data. Environmental data as used here means observations and measurements of the physical, chemical or biological properties of the oceans, rivers, lakes, solid earth, and atmosphere (including space).

(b) The GOES DCS is not to be used for data collection where adequate common-carrier communications exist to provide the service. (Adequate is defined in terms of capacity, speed and reliability with respect to the particular use envisioned.)

(c) User agencies and organizations will be admitted to system use with priority status as follows:

(1) NOAA users or users whose data are required for NOAA programs.

(2) Users whose data are desired to support NOAA programs.

(3) Users whose data and/or use of the GOES DCS will further a program of an agency or department of the United States Government.

(4) Users whose data are required by a State or local government of the United States.

(d) All users of the GOES DCS must use a data collection platform radio set whose technical characteristics conform to specifications established by NOAA. Message format must be as specified.

(e) All users must agree to permit NOAA and other agencies of the United States Government the free and open use of the data from the platforms, and to provide NOAA with the necessary information on data formats to facilitate such use.

(f) All users are responsible for all costs associated with the procurement and operation of the platforms and for the acquisition of the data from those platforms, either directly from the satellite or from the NOAA GOES Data Collection Center at the World Weather Building in Suitland, Maryland.

(g) Design characteristics of the environmental data collection system on the spacecraft require that users conform to technical standards established by NOAA and the using agency and between NOAA and the platform operator when the operator is not in the using agency. See Section 911.3 below.

(h) NOAA will make every effort to maintain the GOES DCS in full operation at all times. However, NOAA will bear no responsibility for any losses incurred as a result of the nonavailability of the DCS.

§ 911.3 Continuation of GOES-DCS.

(a) NOAA expects to continue a geostationary satellite data collection system for the indefinite future, subject to the availability of future appropriations.

(b) As use of the system in support of NOAA programs increases, it eventually may be necessary to restrict the use by other agencies. If a use restriction should become necessary, the general policy will be to provide three to five years' advance notice to the affected users to provide time for them to arrange for alternate means of data collection.

(c) With respect to other United States Government agencies, if a use restriction should become necessary, it may be possible to expand the system to support their needs provided the funds to do so are made available to NOAA by those agencies. 911.4 GOES-DCS Use Agreements.

(a) These agreements will cover, but will not be limited to, (1) the period of time the agreement is valid and procedures for cancelling it, (2) conformance with ITU agreements and regulations, (3) required equipment standards, (4) standards of operation, (5) priorities for use, (6) reporting time and frequencies, (7) data formats, (8) data delivery systems and schedules, and (9) user-borne costs.

(b) The representative of NOAA for evaluating use requests and concluding agreements will be the Director of the National Environmental Satellite Service. For agreements which involve foreign government agencies, the concurrence of the Director of the Office of International Affairs, Oceanic and Atmospheric Services, will be obtained.

[FR Doc. 80-19607 Filed 6-27-80; 8:45 am]
BILLING CODE 3510-12-M

DEPARTMENT OF JUSTICE

28 CFR Part 0 and Part 16

[Order No. 900-80]

Editorial Amendments

AGENCY: Department of Justice.

ACTION: Final rule.

SUMMARY: As a result of reorganizations within the Department of Justice, certain organizational units within the Department have been redesignated, created, or abolished, thus necessitating editorial amendments to Title 28 in order to reflect the same.

EFFECTIVE DATE: June 26, 1980.

FOR FURTHER INFORMATION CONTACT: William J. Snider, Administrative Counsel, Justice Management Division, Department of Justice, Washington, D.C. 20530 ((202) 633-3452).

SUPPLEMENTARY INFORMATION: In 28 CFR § 0.1, entitled "Organizational units", under the heading of "Offices", the "Office of Professional Responsibility", the "Executive Office for United States Trustees" and the "Office of Intelligence Policy and Review" shall be added. However, the "Office of Management and Finance" shall be deleted. In addition, the "Office of Public Information" shall be changed to the "Office of Public Affairs".

Under the heading of "Divisions", the "Justice Management Division" shall be added.

Under the heading of "Boards", the "United States Parole Commission" shall be substituted for the "Board of Parole".

In addition, as a result of the abolishment of the "Records Administration Office", all references to the same, as contained in Subpart CC of Part 0, § 0.196, shall be deleted.

As a result of the abolishment of the "Office of the Watergate Special Prosecution Force", all references to the same, as contained within Part 16, § 16.6(b) (3) and § 16.7, shall be deleted.

PART 0—ORGANIZATION OF THE DEPARTMENT OF JUSTICE

By virtue of the authority vested in me by 28 U.S.C. 509 and 510, Title 28 is hereby amended as follows:

1. Section 0.1 is revised to read as follows:

§ 0.1 Organizational units.

The Department of Justice shall consist of the following principal organizational units:

Offices

Office of the Attorney General.
Office of the Associate Attorney General.
Office of the Deputy Attorney General.
Office of the Solicitor General.
Office of Legal Counsel.
Office of Legislative Affairs.
Office of Professional Responsibility.
Office for Improvements in the Administration of Justice.
Office of Public Affairs.
Office of the Pardon Attorney.
Office of Information Law and Policy.
Office of Intelligence Policy and Review.
Community Relations Service.
Executive Office for United States Attorneys.
Executive Office for United States Trustees.

Divisions

Antitrust Division.
Civil Division.
Civil Rights Division.
Criminal Division.
Land and Natural Resources Division.
Tax Division.
Justice Management Division.

Bureaus

Federal Bureau of Investigation.
Bureau of Prisons.
Drug Enforcement Administration.
Immigration and Naturalization Service.
Law Enforcement Assistance Administration.
United States Marshals Service.

Boards

Board of Immigration Appeals.
United States Parole Commission.

2. Section 0.196 is revised to read as follows:

§ 0.196 Procedures for resolving disagreements concerning mail or case assignments.

When an assignment for the handling of mail or a case has been made through established procedures and the appropriate authorities in any organizational unit of the Department disagree concerning jurisdiction of the unit for handling the matter or matters assigned, the disagreement, together with a statement of the view of the unit or units involved, shall be referred to the Assistant Attorney General for Administration for determination. If the disagreement cannot be resolved, the matter shall be referred to the Deputy Attorney General for final disposition.

3. Section 16.6(b)(3) is amended to read as follows:

§ 16.6 Responses by divisions: form and content.

* * * * *

(b) Form of denial. * * *

* * * * *

(3) Administrative appeal and judicial review. A statement that the denial may be appealed under § 16.7(a) within thirty days by writing to the Attorney General (Attention: Freedom of Information Appeals Unit), Department of Justice, Washington, D.C. 20530 that the envelope and letter should be clearly marked: "Freedom of Information Appeal" or "Information Appeal", and that judicial review will thereafter be available in the district in which the requester resides or has his principal place of business or the district in which the agency records are situated or the District of Columbia.

4. Section 16.7(a) is revised to read as follows:

§ 16.7 Appeals to the Attorney General from initial denials.

(a) Appeals to the Attorney General. When a request for records has been denied in whole or in part by a head of a division or other person authorized to deny requests, the requester may, within thirty days of its receipt, appeal the denial to the Attorney General. Appeals to the Attorney General shall be in writing, addressed to the Attorney General (Attention: Freedom of Information Appeals Unit), Department of Justice, Washington, D.C. 20530, and both the envelope and the letter shall be clearly marked: "Freedom of Information Appeal" or "Information Appeal". An appeal not so addressed and marked will be so marked by Department personnel as soon as it is properly identified, and forwarded immediately to the Freedom of Information Appeals Unit. An appeal improperly addressed will not be deemed to have been received for purposes of the time period set forth in 5 U.S.C. 552(a)(6)(A)(ii) and for purposes of paragraph (b) of this section until the Appeals Unit receives the request or would have done so with the exercise of due diligence by Department personnel.

(28 U.S.C. 509, 510)

Dated: June 26, 1980

Benjamin R. Civiletti,

Attorney General.

[FR Doc. 80-19744 Filed 6-27-80, 8:45 am]

BILLING CODE 4410-01-M

---

28 Parts 0, 16, 42, 45

[Order No. 899-80]

Nomenclature Changes

AGENCY: Department of Justice.

ACTION: Final rule.

SUMMARY: In accordance with Reorganization Plan No. 2 of 1978, 3 CFR 331 (1978 Compilaton) reprinted in 5 U.S.C. 1101, and 92 Stat. 3784, all references to the "Civil Service Commission" shall be changed to the "Office of Personnel Management".

Various reorganizations within the Department of Justice and redesignations of offices and titles necessitate certain nomenclature changes to Title 28.

EFFECTIVE DATE: June 26, 1980.

FOR FURTHER INFORMATION CONTACT: William J. Snider, Administrative Counsel, Justice Management Division, Department of Justice, Washington, D.C. 20530 ((202) 633-3452).

SUPPLEMENTARY INFORMATION: Several reorganizations, redesignation of functions and the assignment of new functions within the Department of Justice have resulted in revisions and amendments to Title 28 of the Code of Federal Regulations. The nomenclature changes contained in this order are required to uniformly reflect the current structure and assignment of functions within the Department of Justice.

PART 0—ORGANIZATION OF THE DEPARTMENT OF JUSTICE

Accordingly 28 CFR chapter I is amended as follows:

1. Section 0.19(a)(6): This section, as published at 44 FR 77157 (December 31, 1979), shall be redesignated as § 0.19(a)(5).

2. Section 0.75: (a) All references to the "Office of Management and Finance" are changed to the "Justice Management Division". (b) The reference to the "Justice Data Center, Department Publication Services Facility" is changed to "Automated Information Services, Publication Services".

3. Section 0.76(r) and (v): All references to the "Civil Service Commission" are changed to the "Office of Personnel Management".

4. Section 0.147: All words after "Assistant Attorney General for Administration" are deleted.

PART 16—PRODUCTION OF DISCLOSURE OF MATERIAL OR INFORMATION

5. Sections 16.2 and 16.85: (a) All references to the "U.S. Board of Parole" are changed to the "U.S. Parole Commission". (b) All references to the "Board" are changed to the "Commission". (c) All references to the acronym "BPR" are changed to "USPC".

6. Section 16.40: All references to the "Civil Service Commission" and/or "Commission" are changed to the "Office of Personnel Management".

7. Sections 16.41(a) and (b)(3); and 16.52(a): All references to the "Information Systems Staff" and/or the "Office of Management and Finance" are changed to the "Assistant Attorney General for Administration".

8. Section 16.76(a)(1), (c)(1), (e) and (f)(1): (a) All references to the acronym "OMF" are changed to "JMD". (b) Any reference to the "Office of Management and Finance" is changed to the "Justice Management Division". (c) Any reference to the "Security and Administrative Services Staff" is changed to the "Security Programs Staff".

PART 42—NONDISCRIMINATION; EQUAL EMPLOYMENT OPPORTUNITY; POLICY AND PROCEDURES

9. Sections 42.2(a) and 42.303(b): All references to the "Civil Service Commission" are changed to the "Office of Personnel Management".

10. Section 42.112(c), Appendix A(3): The reference to the "Bureau of Narcotics and Dangerous Drugs" is changed to the "Drug Enforcement Administration".

PART 45—STANDARDS OF CONDUCT

11. Section 45.735-22(vi): (a) The reference to the "Office of Management and Finance" is changed to the "Justice Management Division". (b) The reference to the "Director, Justice Data Center" is deleted. (c) The reference to the "Director, Department Publication Services Facility" is deleted.

(28 U.S.C. 509,510.)

Dated: June 26, 1980.

Benjamin R. Civiletti,

Attorney General.

[FR Doc. 80-19739 Filed 6-27-80; 8:45 am]

BILLING CODE 4410-01-M

EQUAL EMPLOYMENT OPPORTUNITY COMMISSION

29 CFR Part 1625

Interpretations; Age Discrimination in Employment Act; Correction

AGENCY: Equal Employment Opportunity Commission.

ACTION: Final rule correction.

SUMMARY: On November 21, 1979, the Equal Employment Opportunity Commission published in the Federal Register two final interpretations under the Age Discrimination in Employment Act of 1967, as amended, 29 U.S.C. 621 *et seq.* (FR DOC 79-36003, 44 FR 66791). Inadvertently, the amendatory language did not indicate that Part 1625 was being added to the Code of Federal Regulations. This document corrects the amendatory language and makes an additional correction of a typographical error appearing in the final document.

FOR FURTHER INFORMATION CONTACT: John J. Pagano, Supervisory Attorney, Office of the General Counsel, Legal Counsel Division, EEOC, Room 2254, 2401 E Street, N.W., Washington, D.C. 20506 (202) 634-6595.

Correction: The paragraph following the signature of Eleanor Holmes Norton, Chair of the EEOC, which appears at 44 FR 66797, is hereby amended to read:

"Accordingly, new Part 1625 is added to Title 29 of the Code of Federal Regulations, consisting at this time of Section 1625.11 and 1625.12. Section 1627.17 and paragraph C of § 1627.1 are also added."

In addition, the EEOC hereby corrects a typographical error appearing in the last numbered section on 44 FR 66793. That section is hereby corrected to read:

(i) Current employer distinguished from prior employers. Under the section 12(c) exemption, for purposes of excluding contributions of prior employers, a prior employer is every previous employer of the employee except those previous employers which are members of a "controlled group of corporations" with, or "under common control" with, the employer which forces the employee to retire, as those terms are used in sections 414(b) and 414(c) of the Internal Revenue Code, as modified by Section 415(h) (26 U.S.C. 414(b), (c) and 415(h)).

For the Commission,

Eleanor Holmes Norton,

Chair, Equal Employment Opportunity Commission.

[FR Doc. 80-19586 Filed 6-27-80; 8:45 am]

BILLING CODE 6570-06-M

DEPARTMENT OF TRANSPORTATION

Coast Guard

33 CFR Ch. 1

[CGD 80-78]

Approval of Incorporations by Reference Material and Editorial Changes

AGENCY: Coast Guard, DOT.

ACTION: Editorial changes.

SUMMARY: This document announces editorial and format changes to Title 33, Chapter 1, of the Code of Federal Regulations made necessary by new publication procedures required by the Office of the Federal Register (44 FR 18630, 1 CFR 51.13).

These procedures are: (1) To make it easier for the public to identify incorporated material; and (2) To ensure that only material currently enforced by an agency is incorporated by reference.

Additionally, this document amends cross-reference notes following the Pilot Rules for Inland Waters for the Great Lakes, and the drawbridge regulations. This revision is necessary to reflect changes caused by the deletion of certain regulations. This document also deletes unnecessary effective date notes and corrects the mailing address (zip-code) of U.S. Coast Guard Headquarters.

EFFECTIVE DATE: These changes are effective July 1, 1980.

FOR FURTHER INFORMATION CONTACT: Lieutenant Collin Lau, Regulations and Administrative Law Division (G-LRA), Room 3404, U.S. Coast Guard Headquarters, 2100 Second St., S.W., Washington, D.C. 20593, (202) 426-1534.

SUPPLEMENTARY INFORMATION:

Incorporation by Reference

On March 28, 1979, the Office of the Federal Register established new procedures that agencies must follow to continue the Director's approval of material previously incorporated by reference (44 FR 18630, 1 CFR 51.13).

These procedures require all agencies who wish to continue the Director's approval of material previously incorporated by reference to reapply for that approval. Furthermore, to assure that the system is kept up-to-date after material is approved, each agency is required to submit annually to the Director a list identifying all incorporated material enforced by the agency and the date of its last revision. To accommodate these procedures, editorial changes are being made throughout Chapter 1, of Title 33, Code of Federal Regulations. Incorporation by reference in the text of a regulation will be cited without reference to volume numbers or dates. The specific edition of the material incorporated by reference will be contained in the Table of Incorporation by Reference which will appear at the end of Title 33, Chapter 1.

The current Table of Incorporation by Reference for Title 33 CFR, Chapter 1, is printed in Part III of this issue of the Federal Register.

Miscellaneous Editorial Amendments

The notes following §§ 80.38 and 90.41 contain cross-references to 46 CFR 98.05-50(h), 98.10-45(g) and 98.15(h) which were the regulations for the handling in bulk of elemental phosphorous in water, sulfuric acid and hydrochloric acid. When the Coast Guard published the safety rules for self-propelled vessels carrying hazardous chemicals (42 FR 49016, September 26, 1977), these sections were revoked. The note will be revised to reflect the current citations, 46 CFR 151.45-9, and 46 CFR 153.953.

The cross-reference note following § 117.555 will be revised to reflect the revocation of § 117.620 on November 15, 1979. (44 FR 65750 as corrected, 44 FR 73020, December 17, 1979.)

The effective date notes following §§ 157.11, 157.15 and 157.17 are unnecessary because the regulations are now fully in force. The notes will be deleted.

During 1979 Coast Guard Headquarters moved from the Nassif Building, 400 Seventh Street, S.W., Washington, D.C. 20590 to the Transpoint Building, 2100 Second Street, S.W., Washington, D.C. 20593. In connection with this change a new zip code was assigned. The new zip code, 20593, is being inserted throughout Chapter 1 of Title 33, Code of Federal Regulations.

The above editorial changes are not being published separately in the Federal Register. They will appear in the July 1, 1980 edition of Title 33, Code of Federal Regulations.

Dated: June 25, 1980.

C. F. DeWolf,

Rear Admiral, U.S. Coast Guard, Chief Counsel.

[FR Doc. 80-19731 Filed 6-27-80; 8:45 am]

BILLING CODE 4910-14-M

33 CFR Parts 154 and 155

[CGD 75-124]

Oil Pollution Prevention—Vessels and Marine Oil Transfer Facilities; Correction

AGENCY: Coast Guard, DOT.

ACTION: Final rule, correction.

SUMMARY: This document corrects a final rule on oil pollution prevention which appears at page 7156 of the Federal Register of January 31, 1980.

FOR FURTHER INFORMATION CONTACT: Bruce P. Novak, Office of G-CMC/24, U.S. Coast Guard, Washington, D.C. (202) 426-1477.

SUPPLEMENTARY INFORMATION:

In FR Doc. 80-3064 appearing on page 7156 in the issue of Thursday, January 31, 1980, make the following corrections.

1. On page 7173 in Section 154.560(e), 46 CFR 110.80 is corrected to read 46 CFR 111.80.

2. On page 7176 in Section 155.785(d), 46 CFR 110.80 is corrected to read 46 CFR 111.80.

Dated: June 25, 1980.

K. G. Wiman,

Captain, U.S. Coast Guard, Acting Chief, Office of Marine Environment and Systems.

[FR Doc. 80-19750 Filed 6-27-80; 8:45 am]

BILLING CODE 4910-14-M

33 CFR Part 157

[CGD 77-058b]

Tank Vessels of 20,000 DWT or More Carrying Oil in Bulk; Design, Equipment, Operating, and Personnel Standards

AGENCY: Coast Guard, DOT.

ACTION: Final rule.

SUMMARY: This document informs the public that the Coast Guard is no longer considering amending the "Interim Final Rule" published in the Federal Register on November 19, 1979, and corrected on December 27, 1979 which added standards for segregated ballast tanks, dedicated clean ballast tanks, and crude oil washing systems for certain foreign and domestic tank vessels carrying oil in bulk. The "Interim Final Rule" differed from the proposal and included a change to the assignment of responsibility for various operating requirements. Interested persons were invited to comment on those changes and only one comment was received. These standards will reduce the probability of oil spilling into the navigable waters of the United States and the world's oceans from tank vessel accidents, will reduce the amount of operational discharges of oil to the oceans from ballasting and tank cleaning, and will contribute to the conservation of oil.

EFFECTIVE DATE: This amendment is effective on January 1, 1980, except paragraphs (d), (e), and (f) of § 157.11 are effective on June 1, 1981.

FOR FURTHER INFORMATION CONTACT: Mr. Joseph J. Angelo, Merchant Marine Technical Division (G-MMT-1/13), Room 1308, U.S. Coast Guard Trans Point Building, 2100 2nd Street S.W., Washington D.C., 20590, (202) 426-4431.

SUPPLEMENTARY INFORMATION: On February 12, 1979, the Coast Guard published a proposal in the Federal Register (44 FR 8984) to add regulations governing tank vessels of 20,000 DWT or more carrying oil in bulk and to withdraw a previous proposal (42 FR 24868) for double bottoms and segregated ballast tanks for tank vessels of 20,000 DWT or more. The new proposal included standards for segregated ballast tanks (SBT), dedicated clean ballast tanks (CBT), and crude oil washing (COW) systems which are consistent with the tank vessel equipment and construction standards developed at the Tanker Safety and Pollution Prevention (TSPP) Conference held under the auspices of the Inter-Governmental Maritime Consultative Organization (IMCO) in London during February, 1978. These proposed regulations were issued under the mandate of Subsection 7 of Section 5 of the Port and Tanker Safety Act of 1978 (PTSA). In the proposal the Master of the vessel would have been responsible for ensuring compliance with all the operating requirements.

Interested persons were given 60 days to submit comments concerning this action to the Coast Guard. A total of 65 commenters responded either in writing or orally at the public hearings. A number of minor changes, within the scope of the notice, were made to the detailed requirements for the CBT and COW systems based o the comments received. In addition, the Coast Guard reconsidered the assignment of responsibility for compliance with various operating requirements.

The Master of the vessel is normally the appropriate person to be held responsible for ensuring that the vessel is operated in accordance with the applicable regulations. However, some of the requirements should be placed on the owner, the operator, and the Master because the Coast Guard considers each one a principle who is responsible for some action to allow total compliance with certain operating requirements. In view of this, various operating requirements were changed to have the owner and the operator of the tank vessel share the appropriate responsibilities with the Master.

On November 19, 1979, the Coast Guard published in the Federal Register (44 FR 66502) final rules for the SBT, CBT, and COW system standards, but they were designated as "Interim Final Rules" to allow the public to comment on this expansion of the assignment of responsibility of certain operating requirements. Interested persons were given 75 days to comment on these changes to the assignment of responsibility. Only one comment was received.

On December 27, 1979, a correction document was published in the Federal Register (44 FR 76510) to correct certain errors that appeared in the "Interim Final Rule", including a correction to the effective date so that it would be in conformance with the intent of the MARPOL Protocol and would allow shipowners sufficient time to comply with § 157.11(d), (e), and (f). None of the corrections were concerned with the changes in the assignment of responsibility that were published in the "Interim Final Rule".

Drafting Information

The principal persons involved in drafting this final rule are: Mr. Joseph J. Angelo, Project Manager, Office of Merchant Marine Safety, and Mr. Stanley Colby, Project Attorney, Office of Chief Counsel.

Discussion

The one commenter recommended the following assignment of responsibility for compliance with certain sections of the regulations:

Section	*Responsibility*
157.116	Operator
157.118	Master
157.150	Operator
157.152	Master
157.154	Master
157.160	Operator
157.172	Operator
157.214	Operator
157.216	Master
157.218	Operator

The commenter suggested these changes in the assignment of responsibility because "tanker ownership is not necessarily synonymous with tanker operation and specific ownership is often difficult to determine." The commenter recommended that the responsibility under these regulations not be placed on the owner, but be allocated between the Master and the operator according "to

who best has the ability to directly pursue the act of compliance."

The Coast Guard agrees that in many instances the owner of a tank vessel is difficult to determine and does not play any role in the operation of the vessel. However, while this may be true for many of the tank vessel owners, it is not true for all the owners. There are certain tank vessels that have their operation significantly influenced or dictated by the owner. In addition, compliance with many of the above listed sections cannot be easily allocated between the Master or the operator because of the involvement of all three (owner, operator, and Master) in obtaining, providing, and ensuring compliance with the requirements. For example, the owner and operator of the tank vessel are responsible for obtaining the required documents from the Coast Guard or the government of the vessel's flag state and providing them to the vessel. The Master is responsible for ensuring that these documents are maintained on the vessel. In view of this, the Coast Guard does not adopt the recommendation and the regulations regarding the assignment of responsibility are not changed.

In addition, § 157.124(d), as published in the "Interim Final Rule", was incorrect and not consistent with the intent of the MARPOL Protocol. As worded in the "Interim Final Rule", § 157.124(d) could have required more portable drive units than the maximum number of COW machines that would actually be needed to perform the COW operations required before a ballast voyage. The requirement of the MARPOL Protocol was based on the actual number of COW machines used prior to a given ballast voyage. Therefore, § 157.124(d) has been corrected to reflect the intent of the MARPOL Protocol by reducing the required number of portable drive units.

Accordingly, the "Interim Final Rule" published on November 19, 1979 and corrected on December 27, 1979 is adopted without change, except for the correction to § 157.124(d).

Subchapter O of Chapter I of Title 33, Code of Federal Regulations is amended as follows:

PART 157—RULES FOR THE PROTECTION OF THE MARINE ENVIRONMENT RELATING TO TANK VESSELS CARRYING OIL IN BULK

1. By revising § 157.01 to read as follows:

§ 157.01 Applicability.

(a) This part applies to each tank vessel of 150 gross tons or more, unless otherwise indicated, that carries crude oil or products in bulk and that is—

(1) Documented under the laws of the United States (U.S. vessel); or

(2) A foreign vessel that—

(i) Transfers cargo at a port or place subject to the jurisdiction of the United States; or

(ii) Otherwise enters or operates in the navigable waters of the United States.

(b) This part does not apply to the following:

(1) Vessels under Subsections (4) and (5) of Sec. 5, Port and Tanker Safety Act of 1978 (Pub. L. 95–474, 92 Stat. 1480, 46 U.S.C. 391a).

(2) Any foreign vessel not destined for, or departing from, a port or place subject to the jurisdiction of the United States that is in innocent passage through the territorial seas of the United States or in transit through navigable waters of the United States which form a part of an international strait.

2. By amending § 157.03 by revising paragraphs (k), (n), and (v) and by adding paragraphs (bb), (cc), (dd), (ee), (ff), (gg), and (hh) to read as follows:

§ 157.03 Definitions.

* * * * *

(k) "Major conversion" means a conversion of an existing vessel that—

(1) Substantially alters the dimensions or carrying capacity of the vessel, except the installation of only segregated ballast tanks, dedicated clean ballast tanks, or a crude oil washing system to meet this part;

(2) Changes the type of vessel; or

(3) Substantially prolongs the vessel's service life.

* * * * *

(n) "Oil" includes oil of any kind or in any form, including, but not limited to, petroleum, fuel oil, sludge, oil refuse, and oil mixed with wastes other than dredged spoil.

* * * * *

(v) "Tank vessel" means a vessel that is constructed or converted to carry liquid bulk oil cargoes in tanks and includes tankers, tankships, tank barges, integrated tug barges, and combination carriers when carrying oil cargoes in bulk.

* * * * *

(bb) "Crude oil" means any liquid hydrocarbon mixture occurring naturally in the earth, whether or not treated to render it suitable for transportation, and includes crude oil from which certain distillate fractions may have been removed, and crude oil to which certain distillate fractions may have been added.

(cc) "Product" means any liquid hydrocarbon mixture in any form, except crude oil, petrochemicals, and liquefied gases.

(dd) "Dedicated clean ballast tank" means a cargo tank that is allocated solely for the carriage of clean ballast.

(ee) "Integrated tug barge" means a tug and a tank barge with a mechanical system that allows the connection of the propulsion unit (the tug) to the stern of the cargo carrying unit (the tank barge) so that the two vessels function as a single self-propelled vessel.

(ff) "Ballast voyage" means the voyage that a tank vessel engages in after it leaves the port of final cargo discharge.

(gg) "Large primary structural member" includes any of the following:

(1) Web frames.

(2) Girders.

(3) Webs.

(4) Main brackets.

(5) Transverses.

(6) Stringers.

(7) Struts in transverse web frames when there are 3 or more struts and the depth of each is more than 1/16 of the total depth of the tank.

(hh) "MARPOL Protocol" means the *Protocol of 1978 Relating to the International Convention for the Prevention of Pollution from Ships, 1973,* done at London on February 17, 1978.

3. By adding a new § 157.06 to read as follows:

§ 157.06 Appeals.

(a) Any person directly affected by an action taken under this part may request reconsideration by the Coast Guard official who is responsible for that action.

(b) Any person not satisfied with a ruling made under the procedure contained in paragraph (a) of this section may appeal that ruling in writing, except as allowed under paragraph (e) of this section, to the Coast Guard District Commander of the district in which the action was taken. The appeal may contain supporting documentation and evidence that the appellant wishes to have considered. If requested, the District Commander may stay the effect of the action being appealed while the ruling is being reviewed. The District Commander issues a ruling after reviewing the appeal submitted under this paragraph.

(c) Any person not satisfied with a ruling made under the procedure contained in paragraph (b) of this section may appeal that ruling in writing, except as allowed under paragraph (e) of this section, to the Chief, Office of Merchant Marine Safety, U.S. Coast Guard, Washington, D.C. 20593. The appeal may contain supporting documentation and evidence

that the appellant wishes to have considered. If requested, the Chief, Office of Merchant Marine Safety may stay the effect of the action being appealed while the ruling is being reviewed. The Chief, Office of Merchant Marine Safety issues a ruling after reviewing the appeal submitted under this paragraph.

(d) Any decision made by the Chief, Office of Merchant Marine Safety under the procedure contained in paragraph (c) of this section is final agency action.

(e) If the delay in presenting a written appeal would have a significant adverse impact on the appellant, the appeal under paragraph (b) or (c) of this section may initially be presented orally. If an initial presentation of the appeal is made orally, the appellant must submit the appeal in writing within five days of the oral presentation to the Coast Guard official to whom the oral presentation was made. The written appeal must contain, at a minimum the basis for the appeal and a summary of the material presented orally.

4. By revising the title of Subpart B to read as follows:

Subpart B—Design, Equipment, and Installation

5. By adding § 157.08 (f) and (g) to read as follows:

§ 157.08 Applicability of Subpart B.

* * * * *

(f) Sections 157.09 and 157.10a do not apply to a new vessel that—

(1) Is constructed under a building contract awarded after June 1, 1979;

(2) In the absence of a building contract, has the keel laid or is at a similar stage of construction after January 1, 1980;

(3) Is delivered after June 1, 1982; or

(4) Has undergone a major conversion for which—

(i) The contract is awarded after June 1, 1979;

(ii) In the absence of a contract, conversion is begun after January 1, 1980; or

(iii) Conversion is completed after June 1, 1982.

(g) Sections 157.09(b)(3), 157.10(c)(3), and 157.10a(d)(3) do not apply to tank barges.

6. By adding new § 157.10 and § 157.10a to read as follows:

§ 157.10 Protective location of segregated ballast tanks and crude oil washing systems for certain new vessels.

(a) This section applies to a new vessel that—

(1) Is constructed under a building contract awarded after June 1, 1979;

(2) In the absence of a building contract, has the keel laid or is at a similar stage of construction after January 1, 1980;

(3) Is delivered after June 1, 1982; or

(4) Has undergone a major conversion for which—

(i) The contract is awarded after June 1, 1979;

(ii) In the absence of a contract, conversion is begun after January 1, 1980; or

(iii) Conversion is completed after June 1, 1982.

(b) Each tank vessel under this section of 20,000 DWT or more that carries crude oil and of 30,000 DWT or more that carries products must have segregated ballast tanks that have a total capacity to allow the vessel to meet the draft and trim requirements in paragraph (c) of this section without recourse to the use of cargo tanks for water ballast.

(c) In any ballast condition during any part of a voyage, including that of lightweight with only segregated ballast, each tank vessel under paragraph (b) of this section must have the capability of meeting each of the following:

(1) The molded draft amidship (dm) in meters, without taking into account vessel deformation, must not be less than dm in the following mathematical relationship:

$$dm = 2.0 + 0.02L$$

(2) The drafts at the forward and after perpendiculars must correspond to those determined by the draft amidship under paragraph (c)(1) of this section, in association with a trim by the stern of no more than 0.015L.

(3) The minimum draft at the after perpendicular is that which is necessary to obtain full immersion of the propeller.

(d) Segregated ballast tanks under paragraph (b) of this section, voids, and other spaces that do not carry cargo which are within the cargo tank length must be distributed as determined under the procedure contained in Appendix C of this part.

(e) Each tank vessel under this section of 20,000 DWT or more that carries crude oil must have a crude oil washing system that meets the design, equipment, and installation requirements in Subpart D of this part.

(f) Each tank vessel under this section may be designed to carry ballast water in cargo tanks as allowed under § 157.35.

§ 157.10a Segregated ballast tanks, crude oil washing systems, and dedicated clean ballast tanks for certain new and existing vessels.

(a) Not later than June 1, 1981, except as allowed in paragraph (b) of this section, an existing vessel of 40,000 DWT or more that carries crude oil and a new vessel of 40,000 DWT or more but less than 70,000 DWT that carries crude oil must have—

(1) Segregated ballast tanks with a total capacity to meet the draft and trim requirements in paragraph (d) of this section; or

(2) A crude oil washing system that meets the design, equipment, and installation requirements of Subpart D of this part.

(b) Each tank vessel under paragraph (a) of this section does not have to meet the requirements of paragraph (a) of this section until June 1, 1983, for an existing vessel of 70,000 DWT or more, or until June 1, 1985, for a new or existing vessel of 40,000 DWT or more but less than 70,000 DWT, if the vessel—

(1) Has dedicated clean ballast tanks with the total capacity to meet the draft and trim requirements under paragraph (d) of this section; and

(2) Meets the design and equipment requirements under Subpart E of this part.

(c) Not later than June 1, 1981, an existing vessel of 40,000 DWT or more that carries products and a new vessel of 40,000 DWT or more but less than 70,000 DWT that carries products must have—

(1) Segregated ballast tanks with a total capacity to meet the draft and trim requirements in paragraph (d) of this section; or

(2) Dedicated clean ballast tanks that have a total capacity to meet the draft and trim requirements in paragraph (d) of this section and that meet the design and equipment requirements under Subpart E of this part.

(d) In any ballast condition during any part of a voyage, including that of lightweight with either segregated ballast in segregated ballast tanks or clean ballast in dedicated clean ballast tanks, each tank vessel under paragraph (a)(1), (b), or (c) of this section must have the capability of meeting each of the following without recourse to the use of cargo tanks for water ballast:

(1) The molded draft amidship (dm) in meters, without taking into account vessel deformation, must not be less than dm in the following mathematical relationship:

$$dm = 2.0 + 0.02L$$

(2) The drafts at the forward and after perpendiculars must correspond to those determined by the draft amidship under paragraph (d)(1) of this section, in association with a trim by the stern of no more than 0.015L.

(3) The minimum draft at the after perpendicular is that which is necessary to obtain full immersion of the propeller.

(e) Each tank vessel that meets paragraph (a)(1), (b), or (c) of this section may be designed to carry ballast water in cargo tanks as allowed under § 157.35.

Note.—Segregated ballast tanks located in wing tanks provide protection against oil outflow in the event of a collision, ramming, or grounding.

7. By adding § 157.11 (d), (e), and (f) to read as follows:

§ 157.11 Pumping, piping, and discharge arrangements.

* * * * *

(d) Each tank vessel under § 157.09 or § 157.10a that carries crude oil must have—

(1) Equipment that drains each cargo pump and oil piping line of oil residue;

(2) Oil piping lines for the draining of oil residue from cargo pumps and other oil piping lines to a cargo tank or a slop tank; and

(3) An oil piping line that meets paragraph (f) of this section and is connected to the cargo discharge piping on the outboard side of the manifold valves for the draining of oil residue from cargo pumps and other oil piping lines to a receptacle on the shore.

(e) Each tank vessel under § 157.10 must have—

(1) Oil piping lines that are designed and installed to minimize oil retention in those lines;

(2) Equipment that drains each cargo pump and oil piping line of oil residue;

(3) Oil piping lines for the draining of oil residue from cargo pumps and other oil piping lines to a cargo tank or slop tank; and

(4) An oil piping line that meets paragraph (f) of this section and is connected to the cargo discharge piping on the outboard side of the manifold valves for the draining of oil residue from cargo pumps and other oil piping lines to a receptacle on the shore.

(f) Each oil piping line under paragraph (d)(3) or (e)(4) of this section must have a cross-sectional area of 10 percent or less of the cross-sectional area of the main cargo discharge piping line, except if the oil piping line under paragraph (d)(3) of this section is installed before January 1, 1980, that piping line may have a cross-sectional area of 25 percent or less of the cross-sectional area of the main cargo discharge piping line.

8. By revising § 157.15(b)(1) to read as follows:

§ 157.15 Slop tanks in tank vessels.

* * * * *

(b) * * *

(1) Segregated ballast tanks that meet the requirements in § 157.09, § 157.10, or § 157.10a; or

* * * * *

9. By revising § 157.24(c) to read as follows:

§ 157.24 Submission of calculations, plans, and specifications.

* * * * *

(c) Calculations to substantiate compliance with the segregated ballast capacity and distribution requirements in § 157.09, § 157.10, or § 157.10a or a letter from the government of the vessel's flag state certifying that the vessel complies with the segregated ballast capacity and distribution requirements in—

(1) Section 157.09, § 157.10, or § 157.10a; or

(2) Regulation 13 and 13E of the MARPOL Protocol.

* * * * *

10. By adding a new § 157.26 to read as follows:

§ 157.26 Operation of a tank vessel in violation of regulations.

No person may cause or authorize the operation of a tank vessel in violation of the regulations in this part.

11. By revising § 157.35 to read as follows:

§ 157.35 Ballast added to cargo tanks.

The master of a tank vessel that meets § 157.09, § 157.10, § 157.10a(a)(1), § 157.10a(b), or § 157.10a(c) shall ensure that ballast water is carried in a cargo tank only if—

(a) The vessel encounters abnormally severe weather conditions;

(b) More ballast water than can be carried in segregated ballast tanks or dedicated clean ballast tanks is necessary for the safety of the vessel;

(c) The ballast water is processed and discharged in compliance with § 157.37; and

(d) On a new vessel under § 157.10 that carries crude oil, the ballast water is only carried in a cargo tank that is crude oil washed in accordance with Subpart D of this part during or after the most recent discharge of crude oil from that tank.

12. By amending Part 157 by adding Subparts D and E and appendices C and D to read as follows:

Subpart D—Crude Oil Washing (COW) System on Tank Vessels

General

Sec.

157.100 Plans for U.S. tank vessels: Submission.
157.102 Plans for foreign tank vessels: Submission.
157.104 Scale models.
157.106 Letter of acceptance.
157.108 *Crude Oil Washing Operations and Equipment Manual* for U.S. tank vessels: Submission.
157.110 *Crude Oil Washing Operations and Equipment Manual* for foreign tank vessels: Submission.
157.112 Approved *Crude Oil Washing Operations and Equipment Manual.*
157.114 *Crude Oil Washing Operations and Equipment Manual:* Not approved.
157.116 Required documents: U.S. tank vessels.
157.118 Required documents: Foreign tank vessels.
157.120 Waiver of required documents.

Design, Equipment, and Installation

157.122 Piping, valves, and fittings.
157.124 COW tank washing machines.
157.126 Pumps.
157.128 Stripping system.
157.130 Crude oil washing with more than one grade of crude oil.
157.132 Cargo tanks: Hydrocarbon vapor emissions.
157.134 Cargo tank drainage.
157.136 Two-way voice communications.
157.138 *Crude Oil Washing Operations and Equipment Manual.*

Inspections

157.140 Tank vessel inspections.
157.142 Letter of acceptance: Inspections.
157.144 Tank vessels of the same class: Inspections.
157.146 Similar tank design: Inspections on U.S. tank vessels.
157.147 Similar tank design: Inspections on foreign tank vessels.
157.148 COW system: Evidence for inspections.
157.150 *Crude Oil Washing Operations and Equipment Manual:* Recording information after inspections.

Personnel

157.152 Person in charge of COW operations.
157.154 Assistant personnel.

COW Operations

157.155 COW operations: General.
157.156 COW operations: Meeting manual requirements.
157.158 COW operations: Changed characteristics.
157.160 Tanks: Ballasting and crude oil washing.
157.162 Crude oil washing during a voyage.
157.164 Use of inert gas system.
157.166 Hydrocarbon vapor emissions.
157.168 Crew member: Main deck watch.
157.170 COW equipment: Removal.
157.172 Limitations on grades of crude oil carried.

Subpart E—Dedicated Clean Ballast Tanks on Tank Vessels.

General

Sec.

157.200 Plans for U.S. tank vessels: Submission.

157.202 Plans and documents for foreign tank vessels: Submission.
157.204 Letter of acceptance.
157.206 *Dedicated Clean Ballast Tanks Operations Manual* for U.S. tank vessels: Submission.
157.208 *Dedicated Clean Ballast Tanks Operations Manual* for foreign tank vessels: Submission.
157.210 Approved *Dedicated Clean Ballast Tanks Operations Manual.*
157.212 *Dedicated Clean Ballast Tanks Operations Manual:* Not approved.
157.214 Required documents: U.S. tank vessels.
157.216 Required documents: Foreign tank vessels.
157.218 Dedicated clean ballast tanks: Alterations.

Design and Equipment

157.220 Dedicated clean ballast tanks: Standards.
157.222 Pump and piping arrangements.
157.224 *Dedicated Clean Ballast Tanks Operations Manual.*

Dedicated Clean Ballast Tanks Operations

157.225 Dedicated clean ballast tanks operations: General.
157.226 *Dedicated Clean Ballast Tanks Operations Manual:* Procedures to be followed.
157.228 Isolating valves: Closed during a voyage.

Appendix C—Procedure for Determining Distribution of Segregated Ballast Tanks To Provide Protection Against Oil Outflow in the Event of Grounding, Ramming, or Collision

Appendix D—Example of a Procedure for Dedicated Clean Ballast Tanks Operations

Subpart D—Crude Oil Washing (COW) System on Tank Vessels

Authority: Sec. 5, Port and Tanker Safety Act of 1978, 92 Stat. 1480 (46 U.S.C. 391a); 49 CFR 1.46(n)(4).

General

§ 157.100 Plans for U. S. tank vessels: Submission.

(a) Before each U. S. tank vessel under § 157.10(e) or having a COW system under § 157.10a(a)(2) is inspected under § 157.140, the owner or operator of that vessel must submit to the Coast Guard plans that include—

(1) A drawing or diagram of the COW pumping and piping system that meets 46 CFR 56.01–10(d);

(2) The design of each COW machine;

(3) The arrangement, location, and installation of the COW machines; and

(4) Except as allowed in § 157.104, the projected direct impingement pattern of crude oil from the nozzles of the COW machines on the surfaces of each tank, showing the surface areas not reached by direct impingement.

(b) Plans under paragraph (a) of this section must be submitted to the Officer in Charge, Marine Inspection, of the zone in which the COW system is installed or to one of the following Coast Guard field technical offices:

(1) Commander, 3rd Coast Guard District (mmt), Governors Island, New York, N. Y. 10004, if the COW system is installed in the area under the 1st or 3rd Coast Guard Districts.

(2) Commander, 5th Coast Guard District (mmt), 431 Crawford Street, Portsmouth, Virginia 23705, if the COW system is installed in the area under the 5th or 7th Coast Guard Districts.

(3) Commander, 8th Coast Guard District (mmt), 500 Camp Street, Hale Boggs Federal Building, New Orleans, Louisiana 70130, if the COW system is installed in the area under the 2nd or 8th Coast Guard Districts.

(4) Commander, 9th Coast Guard District (mmt), 601 Rockwell Ave., Cleveland, Ohio 44114, if the COW system is installed in the area under the 9th Coast Guard District.

(5) Commander, 12th Coast Guard District (mmt), 630 Sansome Street, San Francisco, California 94126, if the COW system is installed in the area under the 11th, 12th, 13th, 14th, or 17th Coast Guard Districts.

§ 157.102 Plans for foreign tank vessels: Submission.

If the owner or operator of a foreign tank vessel under § 157.10(e) or having a COW system under § 157.10a(a)(2) desires the letter from the Coast Guard under § 157.106 accepting the plans submitted under this paragraph, the owner or operator must submit to the Commandant (G–MMT), U. S. Coast Guard, Washington, D. C. 20593, plans that include—

(a) A drawing or diagram of the COW pumping and piping system that meets 46 CFR 56.01–10(d);

(b) The design of each COW machine;

(c) The arrangement, location, and installation of the COW machines; and

(d) Except as allowed in § 157.104, the projected direct impingement pattern of crude oil from the nozzles of the COW machines on the surfaces of each tank, showing the surface areas not reached by direct impingement.

§ 157.104 Scale models.

If the pattern under § 157.100(a)(4) or § 157.102(d) cannot be shown on a plan, a scale model of each tank must be built for Coast Guard inspection to simulate, by a pinpoint of light, the projected direct impingement pattern on the surfaces of the tank.

§ 157.106 Letter of acceptance.

The Coast Guard informs the submitter by letter that the plans submitted under § 157.100 or § 157.102 are accepted if—

(a) The plans submitted show that the COW system meets this subpart; or

(b) The plans submitted and the scale model under § 157.104 show that the COW system meets this subpart.

§ 157.108 Crude Oil Washing Operations and Equipment Manual for U.S. tank vessels: Submission.

Before each U.S. tank vessel under § 157.10(e) or having a COW system under § 157.10(a)(2) is inspected under § 157.140, the owner or operator of that vessel must submit two copies of a *Crude Oil Washing Operations and Equipment Manual* that meets § 157.138 to the Officer in Charge, Marine Inspection, of the zone in which the COW system is installed or to the appropriate Coast Guard field technical office listed in § 157.100(b).

§ 157.110 Crude Oil Washing Operations and Equipment Manual for foreign tank vessels: Submission.

If the owner or operator of a foreign tank vessel under § 157.10(e) or having a COW system under § 157.10a(a)(2) desires a Coast Guard approved *Crude Oil Washing Operations and Equipment Manual* under § 157.112, the owner or operator must submit two copies of a manual that meets § 157.138 to the Commandant (G–MMT), U.S. Coast Guard, Washington, D.C. 20593.

§ 157.112 Approved Crude Oil Washing Operations and Equipment Manual.

If the manuals submitted under § 157.108 or § 157.110 meet § 157.138, the Coast Guard approves the manuals and forwards one of the approved manuals to the submitter.

§ 157.114 Crude Oil Washing Operations and Equipment Manual: Not approved.

If the manuals submitted under § 157.108 or § 157.110 are not approved, the Coast Guard forwards a letter to the submitter with the reasons why the manuals were not approved.

§ 157.116 Required documents: U.S. tank vessels.

On and after June 1, 1981, the owner, operator, and master of a U.S. tank vessel under § 157.10(e) or having a COW system under § 157.10a(a)(2) shall ensure that the vessel does not engage in a voyage unless the vessel has on board—

(a) The letter under § 157.106 accepting the COW system plans;

(b) The letter of acceptance under § 157.142 after passing the inspections under § 157.140;

(c) The Coast Guard approved *Crude Oil Washing Operations and Equipment Manual* under § 157.112; and

(d) Any amending letters issued under § 157.158 approving changed characteristics.

§ 157.118 Required documents: Foreign tank vessels.

On and after June 1, 1981, the owner, operator, and master of a foreign tank vessel under § 157.10(e) or having a COW system under § 157.10a(a)(2) shall ensure that the vessel does not enter the navigable waters of the United States or transfer cargo at a port or place subject to the jurisdiction of the United States unless the vessel has on board—

(a) *A Crude Oil Washing Operations and Equipment Manual* that—

(1) Is approved under § 157.112; or

(2) Meets the manual standards in Resolution 15 of the MARPOL Protocol and is approved by the government of the vessel's flag state; and

(b) Evidence of acceptance of the tank vessel's COW system consisting of—

(1) A document from the government of the vessel's flag state that certifies the vessel's compliance with Resolution 15 of the MARPOL Protocol; or

(2) The following letters issued by the Coast Guard:

(i) The letter under § 157.106 accepting the COW system plans.

(ii) The letter of acceptance under § 157.142 after passing the inspections under § 157.140.

(iii) Any amending letters issued under § 157.158 approving changed characteristics.

§ 157.120 Waiver of required documents.

The Coast Guard waives the requirement for the letter under § 157.116(b), if a U.S. tank vessel engages in a voyage, or under § 157.118(b)(2)(ii), if a foreign tank vessel enters the navigable waters of the United States or transfers cargo at a port or place subject to the jurisdiction of the United States, for the purpose of being inspected under § 157.140.

Design, Equipment, and Installation

§ 157.122 Piping, valves, and fittings.

(a) Except as allowed in paragraph (o) of this section, the piping, valves, and fittings of each COW system must—

(1) Meet 46 CFR Part 56; and

(2) Be of steel or an equivalent material accepted by the Commandant.

(b) The piping of each COW system must be permanently installed.

(c) The piping of each COW system must be separate from other piping systems on the vessel, except that the vessel's cargo piping may be a part of the COW piping if the cargo piping meets this section.

(d) The piping of each COW system must have overpressure relief valves or other means accepted by the Commandant to prevent overpressure in the piping of the COW system, unless the maximum allowable working pressure of that system is greater than the shut-off head of each pump that meets § 157.126(b).

(e) Each overpressure relief valve must discharge into the suction side of a pump that meets § 157.126(b).

(f) The piping and equipment of a COW system may not be in machinery spaces.

(g) Each hydrant valve for water washing in the piping of a COW system must—

(1) Have adequate strength to meet 46 CFR Part 56 for the working pressure for which the system is designed; and

(2) Be capable of being blanked off.

(h) Each sensing instrument must have an isolating valve at its connection to the piping of the COW system, unless the opening to that connection is 0.055 inches (1.4 millimeters) or smaller.

(i) If the washing system for cargo tanks has a steam heater used when water washing, it must be located outside the engine room and must be capable of being isolated from the piping of the COW system by—

(1) At least two shut-off valves in the inlet piping and at least two shut-off valves in the outlet piping; or

(2) Blank flanges identifiable as being closed (e.g., spectacle flanges).

(j) If the COW system has a common piping system for oil washing and water washing, that piping system must be designed to drain the crude oil into a slop tank or a cargo tank.

(k) The piping of a COW system must be securely attached to the tank vessel's structure with pipe anchors.

(l) When COW machines are used as pipe anchors, there must be other means available for anchoring the piping if these machines are removed.

(m) There must be a means to allow movement of the COW system piping as a result of thermal expansion and flexing of the tank vessel.

(n) The supply piping attached to each deck mounted COW machine and each COW machine that is audio inspected under § 157.155(a)(4)(ii) must have a shut-off valve.

(o) On combination carriers, piping of the COW system installed between each COW machine located in a cargo tank hatch cover and an adjacent location just outside the hatch coaming, may be flexible hose with flanged connections that is acceptable by the Commandant.

§ 157.124 COW tank washing machines.

(a) COW machines must be permanently mounted in each cargo tank.

(b) The COW machines in each tank must have sufficient nozzles with the proper diameter, working pressure, movement, and timing to allow the tank vessel to pass the inspections under § 157.140.

(c) Each COW machine and its supply piping must be supported to withstand vibration and pressure surges.

(d) There must be one portable drive unit available on board the vessel for every three COW machines that use portable drive units during COW operations required by § 157.160 before each ballast voyage.

(e) Except as allowed in paragraph (f) of this section, each cargo tank must have COW machines located to wash all horizontal and vertical areas of the tank by direct impingement, jet deflection, or splashing to allow the tank vessel to pass the inspections under § 157.140. The following areas in each tank must not be shielded from direct impingement by large primary structural members or any other structural member determined to be equivalent to a large primary structural member by the Commandant when reviewing the plans submitted under § 157.100 or § 157.102:

(1) 90 percent or more of the total horizontal area of the—

(i) Tank bottom;

(ii) Upper surfaces of large primary structural members; and

(iii) Upper surfaces of any other structural member determined to be equivalent to a large primary structural member by the Commandant.

(2) 85 percent or more of the total vertical area of the tank sides and swash bulkheads.

(f) Each cargo tank on a tank vessel having a COW system under § 157.10a(a)(2) with complicated internal structural members does not have to meet paragraph (e) of this section if the following areas of all the cargo tanks of that vessel are washed by direct impingement and the tank vessel can pass the inspections under § 157.140:

(1) 90 percent or more of the total horizontal area of all the—

(i) Tank bottoms;

(ii) Upper surfaces of large primary structural members; and

(iii) Upper surfaces of any other structural member determined to be equivalent to a large primary structural member by the Commandant.

(2) 85 percent or more of the total vertical area of all the tank sides and swash bulkheads.

(g) Each single nozzle COW machine that is mounted to the deck must have a means located outside of the cargo tank that indicates the arc and rotation of the movement of the COW machine during COW operations.

(h) Each multi-nozzle COW machine that is mounted to the deck must have a means located outside of the cargo tank that indicates the movement of the COW machine during COW operations.

(i) Each COW machine mounted to or close to the bottom of a tank without a means located outside of the cargo tank that indicates movement of the machine must not be programmable.

Notes.—1. In the calculations to meet § 157.124 (e) or (f), areas that are shielded from direct impingement by structural members other than large primary structural members or swash bulkheads can be calculated as areas being washed by direct impingement.

2. One or more types of COW machines could be used to meet § 157.124 (e) or (f).

§ 157.126 Pumps.

(a) Crude oil must be supplied to the COW machines by COW system pumps or cargo pumps.

(b) The pumps under paragraph (a) of this section must be designed and arranged with sufficient capacity to meet the following:

(1) A sufficient pressure and flow is supplied to allow the simultaneous operation of those COW machines designed to operate simultaneously.

(2) If an eductor is used for tank stripping, enough driving fluid is provided by the pumps to allow the eductor to meet § 157.128(a).

(c) There must be means on the tank vessel to maintain the pressure under paragraph (b) of this section when shore terminal back pressure is less than the pressure under paragraph (b) of this section.

(d) The COW system must have two or more pumps that are capable of supplying oil to the COW machines.

(e) The COW system must be designed to meet the requirements of this subpart with any one pump not operating.

§ 157.128 Stripping system.

(a) Each tank vessel under § 157.10(e) or having a COW system under § 157.10a(a)(2) must have a stripping system that is designed to remove crude oil from—

(1) Each cargo tank at 1.25 times the rate at which all the COW machines that are designed to simultaneously wash the bottom of the tank, are operating; and

(2) The bottom of each tank to allow the tank vessel to pass the inspection under § 157.140(a)(2).

(b) Each cargo tank must be designed to allow the level of crude oil in the tank to be determined by—

(1) Hand dipping at the aftermost portion of the tank and three other locations; or

(2) Any other means accepted by the Commandant.

(c) Each stripping system must have at least one of the following devices for stripping oil from each cargo tank:

(1) A positive displacement pump.

(2) A self-priming centrifugal pump.

(3) An eductor

(4) Any other device accepted by the Commandant.

(d) There must be a means in the stripping system piping between the device under paragraph (c) of this section and each cargo tank to isolate each tank from the device.

(e) If the stripping system has a positive displacement pump or a self-priming centrifugal pump, the stripping system must have the following:

(1) In the stripping system piping—

(i) A pressure gauge at the inlet connection to the pump; and

(ii) A pressure gauge at the discharge connection to the pump.

(2) At least one of the following monitoring devices to indicate operation of the pump.

(i) Flow indicator.

(ii) Stroke counter.

(iii) Revolution counter.

(f) If the stripping system has an eductor, the stripping system must have—

(1) A pressure gauge at each driving fluid intake and at each discharge; and

(2) A pressure/vacuum gauge at each suction intake.

(g) The equipment required under paragraphs (e) and (f) of this section must have indicating devices in the cargo control room or another location that is accepted by the Commandant.

§ 157.130 Crude oil washing with more than one grade of crude oil.

If a tank vessel under § 157.10(e) or having a COW system under § 157.10a(a)(2) carries more than one grade of crude oil, the COW system must be capable of crude oil washing the cargo tanks with the grades of crude oil that the vessel carries.

§ 157.132 Cargo tanks: hydrocarbon vapor emissions.

Each tank vessel having a COW system under § 157.10a(a)(2) without sufficient segregated ballast tanks or dedicated clean ballast tanks to allow the vessel to depart from any port in the United States without ballasting cargo tanks must have—

(a) A means to discharge hydrocarbon vapors from each cargo tank that is ballasted to a cargo tank that is discharging crude oil; or

(b) Any other means accepted by the Commandant that prevents hydrocarbon vapor emissions when the cargo tanks are ballasted in port.

§ 157.134 Cargo tank drainage.

Each cargo tank must be designed for longitudinal and transverse drainage of crude oil to allow the tank vessel to pass the inspections under § 157.140.

§ 157.136 Two-way voice communications.

Each tank vessel under § 157.10(e) or having a COW system under §157.10a(a)(2) must have a means that enables two-way voice communications between the main deck watch required under § 157.168 and each cargo discharge control station.

§ 157.138 Crude Oil Washing Operations and Equipment Manual.

(a) Each *Crude Oil Washing Operations and Equipment Manual* must include the following information:

(1) The text of the Annex of Resolution 15 of the MARPOL Protocol.

(2) A line drawing of the tank vessel's COW system showing the locations of pumps, piping, and COW machines.

(3) A description of the COW system.

(4) The procedure for the inspection of the COW system during COW operations.

(5) Design characteristic information of the COW system that includes the following:

(i) Pressure and flow of the crude oil pumped to the COW machines.

(ii) Revolutions, number of cycles, and length of cycles of each COW machine.

(iii) Pressure and flow of the stripping suction device.

(iv) Number and location of COW machines operating simultaneously in each cargo tank.

(6) The design oxygen content of the gas or mixture of gases that is supplied by the inert gas system to each cargo tank.

(7) The results of the inspections recorded when passing the inspections under § 157.140.

(8) Characteristics of the COW system recorded during the COW operations when passing the inspections under § 157.140 that includes the following:

(i) Pressure and flow of the crude oil pumped to the COW machines.

(ii) Revolutions, number of cycles, and length of cycles of each COW machine.

(iii) Pressure and flow of the stripping device.

(iv) Number and location of COW machines operating simultaneously in each cargo tank.

(9) The oxygen content of the gas or mixture of gases that is supplied by the inert gas system to each cargo tank recorded during COW operations when passing the inspections under § 157.140.

(10) The volume of water used for water rinsing recorded during COW operations when passing the inspections under § 157.140.

(11) The trim conditions of the tank vessel recorded during COW operations when passing the inspections under § 157.140.

(12) The procedure for stripping cargo tanks of crude oil.

(13) The procedure for draining and stripping the pumps and piping of the COW system, cargo system, and stripping system after each crude oil cargo discharge.

(14) The procedure for crude oil washing cargo tanks that includes the following:

(i) The tanks to be crude oil washed to meet § 157.160.

(ii) The order in which those tanks are washed.

(iii) The single-stage or multi-stage method of washing each tank.

(iv) The number of COW machines that operate simultaneously in each tank.

(v) The duration of the crude oil wash and water rinse.

(vi) The volume of water to be used for water rinse in each tank.

(15) The procedures and equipment needed to prevent leakage of crude oil from the COW system.

(16) The procedures and equipment needed if leakage of crude oil from the COW system occurs.

(17) The procedures for testing and inspecting the COW system for leakage of crude oil before operating the system.

(18) The procedures and equipment needed to prevent leakage of crude oil from the steam heater under § 157.122(i) to the engine room.

(19) The number of crew members needed to conduct the following:

(i) The discharge of cargo.

(ii) The crude oil washing of cargo tanks.

(iii) The simultaneous operations in paragraphs (a)(19) (i) and (ii) of this section.

(20) A description of the duties of each crew member under paragraph (a)(19) of this section.

(21) The procedures for ballasting and deballasting cargo tanks.

(22) The step by step procedure for the inspection of the COW system by vessel personnel before COW operations begin that includes the procedure for inspecting and calibrating each instrument. (Operational Checklist)

(23) The intervals for on board inspection and maintenance of the COW equipment. Informational references to technical manuals supplied by the manufacturers may be included in this part of the manual.

(24) A list of crude oils that are not to be used in COW operations.

(25) The procedure to meet § 157.155(a)(4).

(b) In addition to meeting paragraph (a) of this section, each manual under paragraph (a) of this section on a tank vessel having a COW system under § 157.10a(a)(2) must include the following:

(1) The procedure to meet § 157.166.

(2) The procedures to meet § 157.155(b).

Inspections

§ 157.140 Tank vessel inspections.

(a) Before issuing a letter under § 157.142, the Coast Guard makes an initial inspection of each U.S. tank vessel under § 157.10(e) or having a COW system under § 157.10a(a)(2) and each foreign tank vessel whose owner or operator submitted the plans under § 157.102 to determine whether or not the cargo tanks that carry crude oil when entering a port meet the following:

(1) After each tank is crude oil washed but not water rinsed, except the bottom of the tank may be flushed with water and stripped, each tank is essentially free of oil clingage or deposits of oil, or both to a degree acceptable to the Coast Guard inspector.

(2) After the tanks that are to be used as ballast tanks when leaving the port are crude oil washed and stripped but not water rinsed or bottom flushed, they are filled with water and the total volume of crude oil floating on top of the water in these tanks is 0.085 percent or less of the total volume of these tanks.

(b) Except on a tank vessel under § 157.10(e), if the initial inspection under paragraph (a) of this section has been passed and the vessel arrives at the first cargo loading port after completing a ballast voyage, the Coast Guard monitors the discharge of effluent from those tanks that have been crude oil washed, water rinsed, stripped, and filled with ballast water to determine whether or not the oil content of the effluent is 15 ppm or less.

§ 157.142 Letter of acceptance: Inspections.

If the inspections under § 157.140 are passed, the Coast Guard issues to the tank vessel a letter that states that the vessel complies with this subpart.

§ 157.144 Tank vessels of the same class: Inspections.

(a) If more than one tank vessel is constructed from the same plans, the owner or operator may submit a written request to the Commandant (G-MMT), U.S. Coast Guard, Washington, D.C. 20593, for only one of those tank vessels to be inspected under § 157.140.

(b) Only one tank vessel of the class is inspected under § 157.140, if the Commandant accepts the request submitted under paragraph (a) of this section.

§ 157.146 Similar tank design: Inspections U.S. tank vessels.

(a) If a U.S. tank vessel has tanks similar in dimensions and internal structure, the owner or operator may submit a written request to the Officer in Charge, Marine Inspection, of the zone in which the COW system is inspected, for only one of those tanks to be inspected under § 157.140(a)(1).

(b) Only one tank of a group of tanks similar in dimensions and internal structure is inspected under § 157.140(a)(1), if the Officer in Charge, Marine Inspection, accepts the request submitted under paragraph (a) of this section.

§ 157.147 Similar tank design: Inspections on foreign tank vessels.

(a) If a foreign tank vessel has tanks similar in dimensions and internal structure, the owner or operator may submit a written request to the Commandant (G-MMT), U.S. Coast Guard, Washington, D.C. 20593, for only one of those tanks to be inspected under § 157.140(a)(1).

(b) Only one tank of a group of tanks similar in dimensions and internal structure is inspected under § 157.140(a)(1), if the Commandant accepts the request submitted under paragraph (a) of this section.

§ 157.148 COW system: Evidence for inspections.

(a) Before the inspections under § 157.140 are conducted by the Coast Guard, the owner or operator of a foreign tank vessel that is to be inspected must submit to the Coast Guard inspector evidence that the COW system has been installed in accordance with the plans accepted under § 157.106.

(b) Before the inspections under § 157.140 are conducted by the Coast Guard, the owner or operator of a tank vessel that is to be inspected must submit to the Coast Guard inspector evidence that the COW piping system has passed a test of 1½ times the design working pressure.

§ 157.150 Crude Oil Washing Operations and Equipment Manual: Recording information after inspections.

After passing the inspections under § 157.140, the owner, operator, and master shall ensure that the following are recorded in the *Crude Oil Washing Operations and Equipment Manual* approved under § 157.112:

(a) The results of the inspections under § 157.140.

(b) The following characteristics used to pass the inspections under § 157.140:

(1) Pressure and flow of the crude oil pumped to the COW machines.

(2) Revolutions, number of cycles, and length of cycles of each COW machine.

(3) Pressure and flow of the stripping suction device.

(4) Number and location of COW machines operating simultaneously in each cargo tank.

(5) Volume of water used for water rinsing.

(6) Trim conditions of the tank vessel.

Personnel

§ 157.152 Person in charge of COW operations.

The owner, operator, and master of a tank vessel under § 157.10(e) or having a COW system under § 157.10a(a)(2) shall ensure that the person designated as the person in charge of COW operations—

(a) Knows the contents in the *Crude Oil Washing Operations and Equipment Manual* aproved by the Coast Guard under § 157.112 or by the government of the vessel's flag state;

(b) On at least two occasions, has participated in crude oil washing of cargo tanks, one of those occasions occurring on—

(1) The tank vessel on which the person assumes duties as the person in charge of COW operations; or

(2) A tank vessel that is similar in tank design and which has COW equipment similar to that used on the tank vessel on which the person assumes duties as the person in charge of COW operations; and

(c) Has one year or more of tank vessel duty that includes oil cargo discharge operations and—

(1) Crude oil washing of cargo tanks; or

(2) Has completed a training program in crude oil washing operations that is approved by the Coast Guard or the government of the vessel's flag state.

Note.—Standards of a Coast Guard approved training program are to be developed.

§ 157.154 Assistant personnel.

The owner, operator, and master of a tank vessel under § 157.10(e) or having a COW system under § 157.10a(a)(2) shall ensure that each member of the crew that has a designated responsibility during COW operations—

(a) Has six months or more of tank vessel duty that includes oil cargo discharge operations;

(b) Has been instructed in the COW operation of the tank vessel; and

(c) Is familiar with the contents of the *Crude Oil Washing Operations and Equipment Manual* approved by the Coast Guard under § 157.112 or by the government of the vessel's flag state.

COW Operations

§ 157.155 COW operations: General.

(a) The master of a tank vessel under § 157.10(e) or having a COW system under § 157.10a(a)(2) shall ensure that—

(1) Before crude oil washing a cargo tank, the level in each tank with crude oil that is used as a source for crude oil washing is lowered at least one meter;

(2) A tank used as a slop tank is not used as a source for crude oil washing until—

(i) Its contents are discharged ashore or to another tank; and

(ii) The tank contains only crude oil;

(3) During COW operations—

(i) The valves under § 157.122(i)(1) are shut; or

(ii) The blanks under § 157.122(i)(2) are installed;

(4) The rotation of each COW machine mounted to or close to the bottom of each cargo tank is verified by—

(i) A visual inspection of a means located outside of the cargo tank that indicates movement of the machine during COW operations;

(ii) An audio inspection during COW operations; or

(iii) An inspection on a ballast voyage, with water as the fluid flowing through the machine;

(5) During the audio inspection under paragraph (a)(4)(ii) of this section, the COW machine being inspected is the only one operating in that tank;

(6) Before the inspection under paragraph (a)(4)(iii) of this section, the tank that has the COW machine being inspected in it, is gas freed;

(7) Each COW machine that is inspected under paragraph (a)(4)(iii) of this section is inspected at least once after every sixth COW operation of that machine, but no less that once every 12 months;

(8) After each stripping operation is completed, each tank—

(i) Is sounded by a means under § 157.128(b); and

(ii) Contains no oil except a minimal quantity near the stripping suction;

(9) Before the tank vessel begins each ballast voyage, each cargo tank and each cargo main, stripping, and COW piping is stripped of crude oil and the strippings are conveyed ashore through the piping under § 157.11(d)(3) or §157.11(e)(4);

(10) Before water washing the cargo tanks, the piping of the COW system is drained of crude oil;

(11) When the cargo tanks are not being water washed, the hydrant valves under § 157.122(g) are blanked off;

(12) If COW machines that are used as anchors for the piping of the COW system are removed, the means available under § 157.122(l) for anchoring the piping are installed;

(13) The fire main is not connected to the COW system; and

(14) On combination carriers, if flexible hoses under § 157.122(o) are used, those hoses are protectively stowed when not installed in the COW piping system.

(b) In addition to meeting paragraph (a) of this section, the master of a tank vessel having a COW system under § 157.10a(a)(2) shall ensure that—

(1) Before ballasting cargo tanks upon leaving a port, each cargo pump, manifold, and piping that is used for ballasting the cargo tanks is drained of all crude oil; and

(2) Before ballasting or deballasting cargo tanks, except when ballasting cargo tanks to leave a port, the cargo piping that is used for ballasting or deballasting the cargo tanks is water washed.

§ 157.156 COW operations: Meeting manual requirements.

Except as allowed in § 157.158, the master of a foreign tank vessel under § 157.10(e) or having a COW system under § 157.10a(a)(2) that has a *Crude Oil Washing Operations and Equipment Manual* approved under § 157.112 and is operating in the navigable waters of the United States or transferring cargo at a port or place subject to the jurisdiction of the United States and the master of a U.S. tank vessel under § 157.10(e) or having a COW system under § 157.10a(a)(2) shall ensure that during each COW operation—

(a) The procedures listed in the *Crude Oil Washing Operations and Equipment Manual* are followed; and

(b) The characteristics recorded in the *Crude Oil Washing Operations and Equipment Manual* under § 157.150(b) are met.

§ 157.158 COW operations: Changed characteristics.

The COW system may be operated with characteristics that do not meet those recorded under § 157.150(b) only if—

(a) The tank vessel passes the inspections under § 157.140 using the changed characteristics;

(b) The changed characteristics used to pass the inspections under § 157.140 are recorded in the *Crude Oil Washing Operations and Equipment Manual* approved under § 157.112; and

(c) The Coast Guard issues to the tank vessel an amending letter stating that the tank vessel complies with this subpart with these characteristics.

§ 157.160 Tanks: Ballasting and crude oil washing.

(a) The owner, operator, and master of a tank vessel under § 157.10(e) shall ensure that—

(1) Ballast water is carried in a cargo tank only as allowed under § 157.35;

(2) For sludge control, at least 25 percent of the cargo tanks are crude oil washed before each ballast voyage and that each cargo tank is crude oil washed at least once every fourth time crude oil is discharged from the tank, but no tank need be crude oil washed more than once during each 120 day period;

(3) Ballast water in a cargo tank that is crude oil washed but not water rinsed during or after the most recent discharge of crude oil from that tank is discharged in accordance with § 157.37(a); and

(4) Cargo tanks are not crude oil washed during a ballast voyage.

(b) The owner, operator, and master of a tank vessel having a COW system under § 157.10a(a)(2) shall ensure that—

(1) Ballast water is carried only in a cargo tank that is crude oil washed during or after the most recent discharge of crude oil from that tank;

(2) Before each ballast voyage a sufficient number of cargo tanks have been crude oil washed during or after the most recent discharge of crude oil from those tanks to allow ballast water to be carried in cargo tanks—

(i) With a total capacity to meet the draft and trim requirements in § 157.10a(d); and

(ii) For the vessel's trading pattern and expected weather conditions;

(3) For sludge control, at least 25 percent of the cargo tanks not used for carrying ballast water under paragraph (b)(2)(i) of this section are crude oil washed before each ballast voyage, and that each cargo tank is crude oil washed at least once every fourth time crude oil is discharged from the tank, but no tank need be crude oil washed more than once during each 120 day period;

(4) Cargo tanks are not crude oil washed during a ballast voyage; and

(5) Ballast water in a cargo tank that is crude oil washed but not water rinsed during or after the most recent discharge of crude oil from that tank is discharged in accordance with § 157.37(a).

§ 157.162 Crude oil washing during a voyage.

The master of a tank vessel under § 157.10(e) or having a COW system under § 157.10a(a)(2) shall ensure that each cargo tank that is crude oil washed during a voyage other than a ballast voyage—

(a) Remains empty so that the tank may be inspected upon arrival at the next discharge port; and

(b) If it is to be used as a ballast tank when leaving the discharge port, is ballasted before the vessel departs from that discharge port so that the tank may be inspected under § 157.140(a)(2).

§ 157.164 Use of inert gas system.

(a) The master of a tank vessel under § 157.10(e) or having a COW system under § 157.10a(a)(2) shall ensure the following:

(1) Before each cargo tank is crude oil washed, the oxygen content in the tank is measured at each of the following locations in the tank:

(i) One meter from the deck.

(ii) In the center of the ullage space.

(2) Before each cargo tank with partial bulkheads is crude oil washed, each area of that tank formed by each partial bulkhead is measured in accordance with paragraph (a)(1) of this section.

(3) Before each cargo tank is crude oil washed, the oxygen content in that tank is 8 percent or less by volume at the locations under paragraph (a)(1) of this section.

(4) During COW operations, the following are maintained in each cargo tank being crude oil washed:

(i) A gas or a mixture of gases with an oxygen content of 8 percent or less by volume.

(ii) A positive atmospheric pressure.

(5) During COW operations, a crew member monitors the instrumentation under 46 CFR 32.53–60(a)(1), except if that instrumentation has an alarm that sounds in the cargo control room when the oxygen content exceeds 8 percent by volume.

(b) Crude oil washing of the cargo tanks must be terminated when paragraph (a)(4) of this section is not met and crude oil washing of that tank may not be resumed until the requirements of paragraph (a)(4) of this section are met.

§ 157.166 Hydrocarbon vapor emissions.

If a tank vessel having a COW system under § 157.10a(a)(2) transfers cargo at a port in the United States that is in an area designated in 40 CFR Part 81 as an area that does not meet the national primary ambient air quality ozone standard under 40 CFR Part 50, issued under the Clean Air Act, as amended (42 U.S.C. 1857), the master of that vessel shall ensure that when cargo tanks are ballasted in that port the hydrocarbon vapors in those tanks are contained by a means under § 157.132.

Note.—Questions relating to whether or not a particular port is located in an area designated in 40 CFR Part 81 as an area that does not meet the national primary ambient air quality ozone standard under 40 CFR Part 50 can be answered by contacting the Plans Analysis Section of the Environmental Protection Agency at (919) 541–5365.

§ 157.168 Crew member: Main deck watch.

During COW operations, the master shall ensure that at least one member of the crew with a designated responsibility for monitoring COW operations is on the main deck at all times.

§ 157.170 COW equipment: Removal.

(a) Whenever a deck mounted COW machine is removed from the tank, the master shall ensure that—

(1) The supply piping to that machine is blanked off; and

(2) The tank opening is sealed by a secured plate made of steel or an equivalent material accepted by the Commandant.

(b) If the equipment for the COW system is removed from a cargo tank for the carriage of cargoes other than crude oil and then reinstalled, the master shall ensure that, before COW operations are conducted, the system has no crude oil leakage.

§ 157.172 Limitations on grades of crude oil carried.

If a tank vessel having a COW system under § 157.10a(a)(2) does not have segregated ballast tanks or dedicated clean ballast tanks that meet § 157.10a(d), the owner, operator, and master shall ensure that the vessel carries only the grades of crude oil that can be used for crude oil washing.

Subpart E—Dedicated Clean Ballast Tanks on Tank Vessels

Authority.—Sec. 5, Port and Tanker Safety Act of 1978, 92 Stat. 1480 (46 U.S.C. 391a); 49 CFR 1.46(n)(4).

General

§ 157.200 Plans for U.S. tank vessels: Submission.

(a) Before June 1, 1981 the owner or operator of each U.S. tank vessel under § 157.10a(b) or having dedicated clean ballast tanks under § 157.10a(c)(2) must submit to the Coast Guard plans that include—

(1) The dedicated clean ballast tank arrangement; and

(2) A drawing or diagram of the pumping and piping system for the dedicated clean ballast tanks.

(b) Plans under paragraph (a) of this section must be submitted to the Officer in Charge, Marine Inspection, of the zone in which the dedicated clean ballast tank system is installed or one of the following Coast Guard field technical offices:

(1) Commander, 3rd Coast Guard District (mmt), Governors Island, New York, N.Y. 10004, if the dedicated clean ballast tank system is installed in the area under the 1st or 3rd Coast Guard Districts.

(2) Commander, 5th Coast Guard District (mmt), 431 Crawford Street, Portsmouth, Virginia 23705, if the dedicated clean ballast tank system is installed in the area under the 5th or 7th Coast Guard Districts.

(3) Commander, 8th Coast Guard District (mmt), 500 Camp Street, Hale Boggs Federal Building, New Orleans, Louisiana 70130, if the dedicated clean ballast tank system is installed in the area under the 2nd or 8th Coast Guard Districts.

(4) Commander, 9th Coast Guard District (mmt), 601 Rockwell Ave., Cleveland, Ohio 44114, if the dedicated clean ballast tank system is installed in the area under the 9th Coast Guard District.

(5) Commander, 12th Coast Guard District (mmt), 630 Sansome Street, San Francisco, California 94126, if the dedicated clean ballast tank system is installed in the area under the 11th, 12th, 13th, 14th, or 17th Coast Guard Districts.

§ 157.202 Plans and documents for foreign tank vessels: Submission.

If the owner or operator of a foreign tank vessel under § 157.10a(b) or having dedicated clean ballast tanks under § 157.10a(c)(2) desires the letter from the Coast Guard under § 157.204 accepting the plans submitted under this paragraph, the owner or operator must submit to the Commandant (G-MMT), U.S. Coast Guard, Washington, D.C. 20593—

(a) Plans that include—

(1) The dedicated clean ballast tank arrangement; and

(2) A drawing or diagram of the pumping and piping system for the dedicated clean ballast tanks; and

(b) Documentation from the authority that assigned the load line to the tank vessel that states that the location of the dedicated clean ballast tanks is acceptable to that authority.

§ 157.204 Letter of acceptance.

The Coast Guard informs the submitter by letter that the plans submitted under § 157.200 or the plans and documents submitted under § 157.202 are accepted, if the plans submitted under § 157.200 or the plans and documents submitted under § 157.202 show that the dedicated clean ballast tank system meets this subpart.

§ 157.206 Dedicated Clean Ballast Tanks Operations Manual for U.S. tank vessels: Submission.

Before June 1, 1981, the owner or operator of a U.S. tank vessel under § 157.10a(b) or having dedicated clean ballast tanks under § 157.10a(c)(2) must submit two copies of a *Dedicated Clean Ballast Tanks Operations Manual* that meets § 157.224 to the Officer in Charge, Marine Inspection, of the zone in which the dedicated clean ballast tank system is installed or to the appropriate Coast Guard field technical office listed in § 157.200(b).

§ 157.208 Dedicated Clean Ballast Tanks Operations Manual for foreign tank vessels: Submission.

If the owner or operator of a foreign tank vessel under § 157.10a(b) or having dedicated clean ballast tanks under § 157.10a(c)(2) desires a Coast Guard approved *Dedicated Clean Ballast Tanks Operations Manual* under § 157.210, the owner or operator must submit two copies of a manual that meets § 157.224 to the Commandant (G-MMT), U.S. Coast Guard, Washington, D.C. 20593.

§ 157.210 Approved Dedicated Clean Ballast Tanks Operations Manual.

If the manuals submitted under § 157.206 or § 157.208 meet § 157.224, the Coast Guard approves the manuals and forwards one of the approved manuals to the submitter.

§ 157.212 Dedicated Clean Ballast Tanks Operations Manual: Not approved.

If the *Dedicated Clean Ballast Tanks Operations Manual* submitted under § 157.206 or § 157.208 is not approved, the Coast Guard forwards a letter to the submitter with the reasons why the manual was not approved.

§ 157.214 Required documents: U.S. tank vessels.

On and after June 1, 1981, the owner, operator, and master of a U.S. tank vessel under § 157.10a(b) or having dedicated clean ballast tanks under § 157.10a(c)(2) shall ensure that the vessel does not engage in a voyage unless the vessel has on board—

(a) The letter under § 157.204 accepting the dedicated clean ballast tank system plans;

(b) The Coast Guard approved *Dedicated Clean Ballast Tanks Operations Manual* under § 157.210; and

(c) Any amending letters issued under § 157.218 approving alterations.

§ 157.216 Required documents: Foreign tank vessels.

On and after June 1, 1981, the owner, operator, and master of a foreign tank vessel under § 157.10a(b) or having dedicated clean ballast tanks under § 157.10a(c)(2) shall ensure that the vessel does not enter the navigable waters of the United States or transfer cargo at a port or place subject to the jurisdiction of the United States unless the vessel has on board—

(a) A *Dedicated Clean Ballast Tanks Operations Manual* that—

(1) Is approved under § 157.210; or

(2)Meets the manual standards in Resolution 14 of the MARPOL Protocol and is approved by the government of the vessel's flag state; and

(b) Evidence of acceptance of the tank vessel's dedicated clean ballast tank system consisting of—

(1) A document from the government of the vessel's flag state that certifies the vessel's compliance with Resolution 14 of the MARPOL Protocol; or

(2) The letter under § 157.204 accepting the dedicated clean ballast tank system plans and any amending letters issued under § 157.218 approving alterations.

§ 157.218 Dedicated clean ballast tanks: Alterations.

The dedicated clean ballast tanks or equipment on a tank vessel that has a letter issued under § 157.204 may not be altered so that they no longer meet the plans accepted under that section unless—

(a) The owner or operator of that vessel submits plans that show the alterations to the Coast Guard official to which the plans were submitted under § 157.200 or § 157.202;

(b) The owner or operator of that vessel submits changes to the manual under § 157.224 that show and describe the alterations to the Coast Guard official to which the manuals were submitted under § 157.206 or § 157.208; and

(c) The Coast Guard issues to the tank vessel an amending letter stating that the vessel, as altered, complies with this subpart.

Design and Equipment

§ 157.220 Dedicated clean ballast tanks: Standards.

(a) Cargo tanks that are designated as dedicated clean ballast tanks must allow the tank vessel to meet the draft and trim requirements under § 157.10a(d) when filled with ballast water.

(b) Each tank under paragraph (a) of this section must be—

(1) A wing tank; or

(2) Any other tank that is accepted by the Commandant.

§ 157.222 Pump and piping arrangements.

(a) Dedicated clean ballast tanks must be connected to the least practicable—

(1) Number of pumps; and

(2) Amount of piping.

(b) Each piping system that is arranged to convey clean ballast and cargo must be designed to be flushed to the slop tank with water.

(c) The piping system of each dedicated clean ballast tank must be arranged so that oily water does not enter any dedicated clean ballast tank when the piping system is flushed.

(d) The piping system of each dedicated clean ballast tank must have at least two valves that isolate that tank from each cargo tank.

(e) The piping system of the dedicated clean ballast tanks must have a sample point that is located in a vertical section of discharge piping.

Note.—An example of a sample point is shown in 46 CFR Figure 162.050-17(e).

§ 157.224 Dedicated Clean Ballast Tanks Operations Manual.

Each *Dedicated Clean Ballast Tanks Operations Manual* must include the following information:

(a) The text of the Annex of Resolution 14 of the MARPOL Protocol.

(b) A description of the dedicated clean ballast tanks system.

(c) A procedure for dedicated clean ballast tanks operations.

Note.—Appendix D is an example of such a procedure.

Dedicated Clean Ballast Tanks Operations

§ 157.225 Dedicated clean ballast tanks operations: General.

The master of a tank vessel under § 157.10a(b) or having dedicated clean ballast tanks under § 157.10a(c)(2) shall ensure that—

(a) Before clean ballast in any dedicated clean ballast tank is discharged or transferred, the pump and piping system for conveying the clean ballast are flushed with water;

(b) Before any dedicated clean ballast tank is ballasted, the pump and piping system for conveying the ballast are flushed with water;

(c) Before the pump and piping system of the dedicated clean ballast tanks are used for cargo transfer—

(1) If water in the dedicated clean ballast tanks is used for flushing the pump and piping system, the volume of water for flushing is equal to at least 10 times the volume of the piping to be flushed;

(2) The piping system is drained of fluid; and

(3) The valves under § 157.222(d) are closed;

(d) Flushing water is pumped from a sea chest or a dedicated clean ballast tank through the pump and piping system of the dedicated clean ballast tanks and then to a slop tank;

(e) Clean ballast from each dedicated clean ballast tank is discharged in accordance with § 157.43;

(f) When the pump and piping system are being flushed—

(1) The oil content of the flushing water in the piping system is monitored; and

(2) The pump and piping system are flushed until the oil content of the flushing water in the piping stabilizes; and

(g) If any pump or piping system that is flushed to meet paragraph (f) of this section is used to convey cargo during an emergency, that pump or piping system is flushed again to meet paragraph (f) of this section before being used to convey clean ballast.

§ 157.226 Dedicated Clean Ballast Tanks Operations Manual: Procedures to be followed.

The master of a foreign tank vessel under § 157.10a(b) or having dedicated clean ballast tanks under § 157.10a(c)(2) that has a *Dedicated Clean Ballast Tanks Operations Manual* approved under § 157.210 and is operating in the navigable waters of the United States or transferring cargo at a port or place subject to the jurisdiction of the United States and the master of a U.S. tank vessel under § 157.10a(b) of having dedicated clean ballast tanks under § 157.10a(c)(2) shall ensure that the procedures listed in the *Dedicated Clean Ballast Tanks Operatons Manual* are followed.

§ 157.228 Isolating valves: Closed during a voyage.

(a) The master of each U.S. tank vessel under § 157.10a(b) or having dedicated clean ballast tanks under § 157.10a(c)(2) shall ensure that the valves under § 157.222(d) remain closed during a voyage.

(b) The master of each foreign tank vessel under § 157.10a(b) or having dedicated clean ballast tanks under § 157.10a(c)(2) shall ensure that the valves under § 157.222(d) remain closed when the vessel is on a voyage in the navigable waters of the United States.

Appendix C—Procedure for Determining Distribution of Segregated Ballast Tanks To Provide Protection Against Oil Outflow in the Event of Grounding, Ramming, or Collision

1. *Source.* The procedure for determining the distribution of segregated ballast tanks contained in this appendix conforms to Regulation 13E of the MARPOL Protocol.

2. *Procedure.* Protective location of segregated ballast tanks, voids, and other spaces that do not carry cargo which are within the cargo tank length is determined from the following:

$$\Sigma PA_c + \Sigma PA_s = J[L_t(B + 2D)]$$

Where—

PA_c = the side shell area in square meters based on projected molded dimensions for each segregated ballast tank, void, or other space that does not carry cargo and which complies with paragraph 2(b) of this appendix;

PA_s = the bottom shell area in square meters based on projected molded dimensions for each segregated ballast tank, void, or other space that does not carry cargo and which complies with paragraph 2(b) of this appendix;

L_t = the length in meters between the forward and after extremities of the cargo tanks;

B = the maximum breadth of the ship in meters measured amidship to the molded line of the frame; and

D = the molded depth in meters measured vertically from the top of the keel plate to the top of the freeboard deck beam at the side amidships. In tank vessels having rounded gunwales, the molded depth is measured from the top of the keel plate to the point of intersection of the molded lines of the deck and side shell plating, the lines being extended as though the gunwale were of angular design.

(a) *Method of determining a value for J.*

(1) For tank vessels for 20,000 DWT, J = 0.45.

(2) For tank vessels of 200,000 DWT or more—

(i) J = 0.30; or

(ii) J = the greater of 0.20, or

$$0.30 - \left[a - \frac{(O_c + O_s)}{40_A}\right]$$

where:

a = 0.25 for tank vessels of 200,000 DWT.
a = 0.40 for tank vessels of 300,000 DWT.
a = 0.50 for tank vessels of 420,000 DWT.

For values of DWT between 200,000 and 300,000 DWT, 300,000 and 420,000 DWT, and greater than 420,000 DWT, the value of "a" is determined by linear interpolation.

O_c = as calculated in Appendix A of this part.

O_s = as calculated in Appendix A of this part.

O_A = the allowable oil outflow meeting § 157.19(b)(1) of this part.

(3) For values of DWT between 20,000 and 200,000 DWT, the value of "J" is determined by linear interpolation between 0.45 and 0.30 respectively.

(b) PA_c and PA_s: *Criteria for determining the segregated ballast tanks, voids, and other spaces that do not carry cargo.*

The following criteria are to be met for a segregated ballast tank, void, or space that does not carry cargo, to be used in determining PA_c and PA_s:

(1) The minimum width of each wing tank or space, either of which extends for the full depth of the vessel's side or from the main deck to the top of the double bottoms is 2 meters or more. The width is measured inboard from the vessel's side shell plating at right angles to the vessel's center line. If a wing tank or space has a width anywhere within it that is less than 2 meters, that wing tank or space is not used when calculating PA_c.

(2) The minimum vertical depth of each double bottom tank or space is B/15 or 2 meters, whichever is smaller. If a double bottom tank or space has a depth less than B/15 or 2 meters, whichever is smaller, anywhere within it, the double bottom or space is not to be used when calculating PA_s.

(3) The minimum width of a wing tank or space is not measured in the way of—

(i) the turn of the bilge area; or

(ii) a rounded gunwale area.

(4) The minimum depth of a double bottom tank or space is not measured in the way of the turn of the bilge area.

Appendix D—Example of a Procedure for Dedicated Clean Ballast Tanks Operations

1. *Source.* The example procedure for dedicated clean ballast tanks operation contained in this appendix conforms to the Annex of Resolution 14 of the MARPOL Protocol.

2. *Example Procedure.* Dedicated clean ballast tanks operational procedure:

(a) Before arrival at the loading port:

(1) Transfer all remaining slop to a cargo tank.

(2) Ensure that the pumping and piping designated for clean ballast operation have been properly cleaned to accommodate simultaneous discharge of clean ballast while loading.

(3) Ensure that all valves to the slop tank and the cargo tanks are closed.

(4) Perform visual inspection of all dedicated clean ballast tanks and their contents, if any, for signs of contamination.

(5) Discharge a sufficient amount of clean ballast water to ensure that remaining ballast water and cargo to be loaded will not exceed the permissible deadweight or draft. Leave a sufficient amount of water for flushing the piping, and as a minimum, a quantity equal to 10 times the volume of the affected piping.

(6) Ensure that all valves to the dedicated clean ballast tanks are closed.

(7) If no further ballast discharge is anticipated, drain the clean ballast piping.

(b) In the loading port:

(1) Perform normal loading operations of cargo tanks.

(2) Ensure sufficient slop tank capacity is available for subsequent reception of cargo pump and piping flushings.

(3) When applicable, discharge remaining clean ballast before entire piping system is used for loading. Leave the required minimum quantity of flushing water in ballast tanks.

(4) Ensure that all valves to the dedicated clean ballast tanks are closed.

(5) Ensure that all valves to the cargo tank are closed upon completion of loading.

(c) After departure from the loading port:

(1) Flush appropriate pumping and piping with sufficient water from dedicated clean ballast tanks into a slop tank.

(2) Ensure that valves to the slop tank are closed before pumping the remaining clean water overboard and monitoring oil content of the water.

(3) Ensure that all valves in the dedicated clean ballast tanks are closed.

(d) Before arrival at the unloading port:

(1) Ensure that all valves to the slop tank and cargo tanks are closed.

(2) Recheck that the pumping and piping designated for clean ballast operation have been properly cleaned.

(3) Ballast through clean cargo pumps and piping, considering the port's draft requirements.

(4) Ensure that all valves in the dedicated clean ballast tanks are closed.

(e) In the unloading port:

(1) Allocate pumping and piping intended for clean ballast operation.

(2) Perform normal unloading operations.

(3) As soon as draft conditions permit, complete ballasting to departure conditions.

(4) Ensure that all valves to the dedicated clean ballast tanks are closed.

(5) Complete unloading.

(f) After departure from the unloading port:

(1) Flush pumps and piping servicing the dedicated clean ballast tanks into the slop tank.

(2) Top up dedicated clean ballast tanks.

(3) Process the slop tank content in accordance with load on top (LOT) procedures.

(92 Stat. 1480 (Sec. 5, Port and Tanker Safety Act of 1978, 46 U.S.C. 391a); 49 CFR 1.46(n)(4))

Dated: June 25, 1980.

J. B. Hayes,

Admiral, U.S. Coast Guard Commandant.

[FR Doc. 80-19700 Filed 6-27-80; 8:45 am]

BILLING CODE 4910-14-M

ARCHITECTURAL AND TRANSPORTATION BARRIERS COMPLIANCE BOARD

36 CFR Part 115

General Statements of Policy: Public Transportation Policies

AGENCY: Architectural and Transportation Barriers Compliance Board.

ACTION: Final rule.

SUMMARY: The Architectural and Transportation Barriers Compliance Board adopted a general policy concerning the right of disabled persons to accessible public transportation. This policy states that disabled persons have the right to public transportation that is comparable to services available to the general public in terms of geographic range and hours of operation, trip decision time, fares, and lack of restrictions on travel purpose and eligibility.

EFFECTIVE DATE: May 16, 1980.

FOR FURTHER INFORMATION CONTACT: Ms. Laurinda Steele, Office of Policy, Planning, and Program Development, Architectural and Transportation Barriers Compliance Board, 330 C Street, SW, Washington, D.C. 20201 (202/245-1801).

SUPPLEMENTARY INFORMATION: Pursuant to § 502 of the Rehabilitation Act of 1973, Pub. L. 93-112, as amended, the Architectural and Transportation Barriers Compliance Board (A&TBCB) at its May 16, 1980 meeting established an initial general policy concerning the right of disabled persons to accessible public transportation. This policy statement is consistent with the Board's legislative responsibilities under section 502(c) to prepare plans and proposals for such further actions as may be necessary to the goals of adequate transportation for the handicapped.

At the May meeting the A&TBCB Transportation Committee presented recommendations to the Executive Committee and the full Board concerning general transportation policy and goals. The policy adopted addresses the accessibility of all public transportation to physically disabled persons.

Because this is a general statement of policy from the A&TBCB, the provisions of the Administrative Procedure Act (5 U.S.C. 553) requiring notice of proposed rulemaking opportunity for public participation and the necessary delay in an effective date, are not applicable.

The A&TBCB amends Part 1151 by adding a new § 1151.3 as follows:

§ 1151.3 Public transportation accessibility policy.

Just as disabled persons are entitled to equal access to public buildings, they are entitled to equal mobility; this means that they have the right to public transportation that is comparable to that available to the general public in terms of geographic range and hours of operation, trip decision time, fares, and the lack of restrictions on trip purpose and eligibility.

(29 U.S.C. 792; Pub. L. 93-112 as amended by Pub. L. 95-602)

Dated: June 23, 1980.

Max Cleland,

Chairperson, Architectural and Transportation Barriers Compliance Board.

[FR Doc. 80-19494 Filed 6-27-80; 8:45 am]

BILLING CODE 4110-02-M

POSTAL SERVICE

39 CFR Parts 221, 224

Organizational Changes

AGENCY: Postal Service.

ACTION: Final rule.

SUMMARY: The amendments to the rules reflect the establishment of the new position of Assistant Postmaster General, International Postal Affairs, in the Administration Group, and a change in the reporting relationship of the Records Officer. The amendments also add a general description of the responsibilities of the Finance Group; describe the functions of Payroll Systems; show the assignment of additional duties to the Executive Assistant to the Postmaster General; update the description of the functions of the Delivery Services Department; reflect the establishment of the Planning Department; describe the new position and functions of the Executive Assistant to the Deputy Postmaster General; and make certain editorial changes.

EFFECTIVE DATE: June 30, 1980.

FOR FURTHER INFORMATION CONTACT: Paul J. Kemp, (202) 245-4638.

Accordingly, Parts 221 and 224 of title 39, Code of Federal Regulations, are amended as follows:

PART 221—GENERAL PRINCIPLES OF ORGANIZATION

§ 221.3 [Amended]

1. In § 221.3, insert "(PMG)" after the word "General" in the first sentence of paragraph (a); strike out the word "He" in the second and third sentences of paragraph (a) and insert "The PMG" in lieu thereof; strike out the word "he" in paragraph (b) and insert "the PMG" in lieu thereof; strike out in the second sentence of paragraph (c) the words "his" and "he" and insert "the PMG's" and "the PMG" respectively in lieu thereof.

§ 221.4 [Amended]

2. In § 221.4, strike out the word "He" in the second and third sentences of paragraph (a) and insert "The Deputy" in lieu thereof; strike out in paragraph (b) the words "all tasks assigned him" and "He" and insert "all tasks as assigned" and "The Deputy" respectively in lieu thereof.

3. In § 221.5, the second sentence of paragraph (c) is amended to read as follows: "These include the Law Department, headed by the General Counsel, the Inspection Service Department, headed by the Chief Postal Inspector, and the Planning Department, headed by an Assistant Postmaster General."; paragraphs (d)(1) (iii)-(ix) are revised to read as follows:

§ 221.5 Groups and departments.

* * * * *

(c) [Amended]

(d)(1) * * *

(iii) The Senior Assistant Postmaster General, Administration Group;

(iv) The Senior Assistant Postmaster General; Employee and Labor Relations Group;

(v) The Senior Assistant Postmaster General, Finance Group;

(vi) The Senior Assistant Postmaster General, Operations Group;

(vii) The Senior Assistant Postmaster General, Research and Technology Group;

(viii) The Assistant Postmaster General, Government Relations Department;

(ix) The Assistant Postmaster General, Public and Employee Communications Department;

* * * * *

§ 221.7 [Amended]

4. In § 221.7, strike out in the first sentence the words "and the Executive Assistant to the Postmaster General" and insert "the Executive Assistant to the Postmaster General, and the Executive Assistant to the Deputy Postmaster General" in lieu thereof.

PART 224—GROUPS AND DEPARTMENTS

5. In § 224.1 the introductory text of paragraphs (c) and (c)(5) are revised to read as follows:

§ 224.1 Administration Group.

* * * * *

(c) The Administration Group is divided into three departments, the Judicial Officer, and International Postal Affairs. The head of each reports to the Senior Assistant Postmaster General, Administration. The components of the Administration Group are:

* * * * *

(5) *International Postal Affairs.* International Postal Affairs is headed by the Assistant Postmaster General, International Postal Affairs. It is responsible for:

* * * * *

6. In § 224.3, paragraph (b)(4) is amended by deleting the last sentence thereof; and paragraph (a) and the introductory text of paragraph (b) is revised and new paragraphs (b)(5) and (b)(6) are added reading as follows:

§ 224.3 Finance Group.

(a) The Finance Group is headed by the Senior Assistant Postmater General, Finance, who reports to the Postmaster General. It is responsible for:

(1) Policy and functional guidance to field organizations and activities in the areas of finance, postal rates and classification, management information systems, and management services; and

(2) Control of Postal Service systems relating to management information, budget and accounting, financial planning, postal rates and classification, automatic data processing, and management services.

(b) The Finance Group consists of three departments, each headed by an Assistant Postmaster General, and one office, headed by a Director. The Postal Service Records Officer and Payroll Systems are also located within this Group.

* * * * *

(4) [Amended]

(5) *Records Officer.* The Postal Service Records Officer has responsibility for the retention, security and privacy of Postal Service records; authorizes their preservation and disclosure; and orders their disposal by destruction of transfer.

(6) *Payroll Systems.* Payroll Systems is headed by the Assistant Postmaster General, Payroll Systems. It is responsible for:

(i) Communicating directly with Headquarters, Regional, and Field organizations, particularly the Finance, Employee Relations, and Management Information Systems Departments, to determine the causes of and to find solutions for any problems in the payroll system.

(ii) Establishing policies and procedures designed to assure an efficient, reasonably trouble-free payroll system.

7. In § 224.4, paragraph (c)(2) is revised to read as follows:

§ 224.4 Operations Group.

* * * * *

(c) * * *

(2) *Delivery Services Department.* This Department is headed by an Assistant Postmaster General, who is responsible for operating policies and procedures, analysis of the field operating budget, and evaluation of field performance in the following areas: city and rural delivery, clerical retail operations, the vehicle fleet, undeliverable-as-addressed mail, lockbox deployment, postal vending machines, the Zip Code and Carrier Route Information Systems, associate office management, and establishment and discontinuance of post offices and suspension of post office operations.

8. Section 224.10 is revised to read as follows:

§ 224.10 Executive Assistant to the Postmaster General.

The Executive Assistant to the Postmaster General is a principal advisor to the Postmaster General on matters of the highest level involving organization, administration, and policy formulation and issuance; performs special functions as directed by the Postmaster General; reports directly to the Postmaster General; serves as secretary to the Executive Committee (see § 221.5(d) of this chapter); and has coordinating responsibility for Board of Governors' meetings; and is also the Postmaster General's designee as the USPS liaison official to receive requests from the Postal Rate Commission for general information and for arranging Commission visits to postal installations.

9. New § 224.11 is added reading as follows:

§ 224.11 Executive Assistant to the Deputy Postmaster General.

The Executive Assistant to the Deputy Postmaster General assists the Deputy Postmaster General in carrying out a wide variety of assignments involving the full range of postal activities; oversees and coordinates the unemployment and workers compensation programs; reports directly to the Deputy Postmaster General.

10. New § 224.12 is added reading as follows:

§ 224.12 Planning Department [Reserved]

(39 U.S.C. 401(2), 402)

W. Allen Sanders,

Associate General Counsel for General Law and Administration.

[FR Doc. 80-19524 Filed 6-27-80; 8:45 am]

BILLING CODE 7710-12-M

---

39 CFR Part 912

Federal Tort Claims Act; Amendments to Procedural Rules

AGENCY: Postal Service.

ACTION: Final rule.

SUMMARY: The Postal Service rules are amended (1) to raise the authority to pay tort claims without review by a legal officer from $1,000 to $2,500; (2) to clarify existing rules; (3) to delete unnecessary rules; and (4) to add rules to conform to regulations of the Department of Justice.

EFFECTIVE DATE: June 30, 1980.

FOR FURTHER INFORMATION CONTACT: Clinton I. Newman (202) 245-4581.

SUPPLEMENTARY INFORMATION: The Department of Justice is authorized by statute (28 U.S.C. 2672) to prescribe regulations under which a Federal agency may consider claims presented under the Federal Tort Claims Act. Federal agencies (including the Postal Service) are authorized to issue regulations consistent with those of the Department of Justice. Over a period of time, the Department of Justice has made a number of changes in its regulations. This issuance is intended to reflect those changes in Postal Service regulations, to make certain other changes to clarify the existing Postal Service regulations, and to delete certain unnecessary regulations which are merely repetitive of those rules appearing in the Department of Justice regulations, and the United States Code. The following is a sectional analysis of the changes being made to 39 CFR 912.2–912.6 and 912.8; 912.11–912.15.

§ *912.2 Applicability of Federal Tort Claims Act.* Existing paragraphs (a) and (b) are contained in the regulations of the Department of Justice and the Act itself; inclusion in Postal Service regulations is repetitive, redundant, and unnecessary. New paragraph (a) is being substituted as it advises the statutory basis upon which the Federal Tort Claims Act is made applicable to the Postal Service and is the subject of frequent public inquiry and concern. Existing paragraph (c) is renumbered (b); no other changes are being made.

§ *912.3 Time limit for filing.* This section is reworded for clarity and style.

§ *912.4 Place of filing.* This section is amended to provide the public with a specific address to direct their claims.

§ *912.5 Administrative claim; where presented.* The heading is being amended for clarity and style. New paragraph (b) is being added to incorporate an amendment made in the regulations of the Department of Justice (28 CFR 14.2(b), Order 422-69 35 FR 314 Jan. 8, 1970).

§ *912.6 Administrative claim; who may file.* The heading is being amended for clarity and style.

§ *912.8 Limitation on Postal Service authority.* This section is being deleted, as identical regulations are contained in the regulations of the Department of Justice, and to some extent, the Act itself. Inclusion in Postal Service regulations is repetitive, redundant, and unnecessary. Substituted is § 912.8, *Sufficiency of evidence and information submitted.* This section is being incorporated to advise claimants of recent judicial decisions (*Kornbluth* v. *Savannah*, 398 F. Supp. 1266 (E.D. N.Y. 1975)) which bear directly on the claimants fulfilling the requirement that they exhaust administrative remedies before filing a claim with the Postal Service.

§ *912.11 Review of adjudication* is being deleted, since the same information is contained in § 912.9(b) and § 912.14.

§ *912.12 Exclusiveness of remedy* is renumbered and is being amended for clarity.

§ *912.13 Review by legal officers* is renumbered as § 912.12 and is being amended to incorporate a similar amendment of the regulation issued by the Department of Justice. 28 CFR 14.5.

§ *912.14 Renumbered as § 912.13.*

§ *912.15 Conclusiveness of remedy* is renumbered as § 912.13 and is being amended for clarity and style.

To carry out the above changes, Title 39, Code of Federal Regulations is amended as follows:

6PART 912—PROCEDURES TO ADJUDICATE CLAIMS FOR PERSONAL INJURY OR PROPERTY DAMAGE ARISING OUT OF THE OPERATION OF THE U.S. POSTAL SERVICE

1. Sections 912.2, 912.3, and 912.4 are revised to read as follows:

§ 912.2 Applicability of Federal Tort Claims Act.

(a) The provisions of Chapter 171 and all other provisions of Title 28, U.S. Code, relating to tort claims shall apply to tort claims arising out of the activities of the Postal Service. (39 U.S.C. 409(c)).

(b) Where the General Counsel, or his designee, finds a claim for damage to

persons or property resulting from operation of the U.S. Postal Service to be a proper charge against the United States and it is not cognizable under 28 U.S.C. 2672, he may adjust and settle it under authority of 39 U.S.C. 2603.

§ 912.3 Time limit for filing.

(a) *Claim.* A claim under the Federal Tort Claims Act must be presented within two years from the date the claim accrues.

(b) *Suit.* Suit must be filed within six months after the date of mailing by certified or registered mail of notice of final denial of the claim by the Postal Service.

§ 912.4 Place of filing.

A claim is usually filed with the postmaster of the office within the delivery limits of where the accident happened, but may be filed at any office of the Postal Service, or sent directly to the Assistant General Counsel, Claims Division, U.S. Postal Service, Washington, D.C. 20260.

2. In § 912.5, strike out the heading and insert the new heading: "Administrative claim; when presented."; insert designation of paragraph (a) immediately preceding language of existing § 912.5, and add new paragraph (b) reading as follows:

§ 912.5 Administrative claim; when presented.

(a) * * *

(b) A claim presented in compliance with paragraph (a) of this section may be amended by the claimant at any time prior to final Postal Service action or prior to the exercise of the claimant's option under 28 U.S.C. 2675(a). A claim may not be amended after the Postal Service has issued payment of the full amount of the claim or has issued a written denial of the claim in accordance with § 912.9. Amendments shall be submitted in writing and signed by the claimant or his duly authorized agent or legal representative. Upon the timely filing of an amendment to a pending claim, the Postal Service shall have six months in which to make final disposition of the claim as amended, and the claimant's option under 28 U.S.C. 2675(a) shall not accrue until six months after the filing of an amendment.

3. In § 912.6, strike out the heading and insert the new heading as follows:

§ 912.6 Administrative claim; who may file.

* * * * *

4. Section 912.8 is revised to read as follows:

§ 912.8 Sufficiency of evidence and information submitted.

In order to exhaust the administrative remedy provided, a claimant shall submit substantial evidence to prove the extent of any losses incurred and any injury sustained, so as to provide the Postal Service with sufficient evidence for it to properly evaluate the claim.

5. Section 912.11 is revised to read as follows:

§ 912.11 Exclusiveness of remedy.

The provisions of 28 U.S.C. 2679(b) provide that the remedy against the United States, as provided by sections 1346(b) and 2672 of Title 28, for injury or loss or personal injury or death resulting from the operation by an employee of the Government of any motor vehicle while acting within the scope of his employment is exclusive of any other civil action or proceeding by reason of the same subject matter against the employee or his estate whose act or omission gave rise to the claim.

6. Section 912.12 is revised to read as follows:

§ 912.12 Review by legal officers.

The authority of the Postal Service to adjust, determine, compromise, and settle a claim under the provisions of the Federal Tort Claims Act shall, if the amount of a proposed compromise, settlement, or award exceeds $2,500, be exercised only after review by a legal officer of the Postal Service.

§ 912.13 [Deleted]

§ 912.14 [Renumbered as § 912.13]

7. Section 912.13 is deleted. Section 912.14 is renumbered as § 912.13.

8. Section 912.15 is renumbered as § 912.14 and amended to read as follows:

§ 912.14 Conclusiveness of remedy.

Payment by the Postal Service of the full amount claimed or acceptance by the claimant, his agent, or legal representative, of any award, compromise, or settlement made pursuant to the provisions of the Federal Tort Claims Act, shall be final and conclusive on the claimant, his agent, or legal representative, and any other person on whose behalf or for whose benefit the claim has been presented, and shall constitute a complete release of any claim against the United States and against any employee of the Government whose act or omission gave rise to the claim by reason of the same subject matter.

(28 U.S.C. 2671–2680; 28 CFR 14.1–14.11; (39 U.S.C. 409))

W. Allen Sanders,

Associate General Counsel, General Law and Administration.

[FR Doc. 80-19491 Filed 6-27-80; 8:45 am]

BILLING CODE 7710-12-M

ENVIRONMENTAL PROTECTION AGENCY

40 CFR Part 180

[OPP-00122; FRL 1527-7]

Incorporation by Reference Update; Tolerances and Exemptions From Tolerances for Pesticide Chemicals in or on Raw Agricultural Commodities

AGENCY: Environmental Protection Agency (EPA).

ACTION: Final rule.

SUMMARY: EPA is issuing an update of Bergey's Manual of Determinative Bacteriology referenced in § 180.1011 *Viable spores of the microorganism Bacillus thuringiensis Berliner; exemption from the requirement of a tolerance,* to the Eighth Edition in an effort to conform to the requirement for incorporation by reference.

EFFECTIVE DATE: This rule is effective June 30, 1980.

FOR FURTHER INFORMATION CONTACT: John A. Richards, Chief, Federal Register Section (TS-793), Office of Pesticides and Toxic Substances, Environmental Protection Agency, 401 M St., SW, Washington, DC 20460, (202-426-2423).

SUPPLEMENTARY INFORMATION: In an effort to reflect the most recent edition of material incorporated by reference under § 180.1011 *Viable spores of the microorganism Bacillus thuringiensis Berliner; exemption from the requirement of a tolerance,* the regulation is being revised to reference the Eighth Edition rather than the Seventh Edition of Bergey's Manual of Determinative Bacteriology.

Since there is no substantive difference in the material referenced no public comment and procedures is required.

PART 180—TOLERANCES AND EXEMPTIONS FROM TOLERANCES FOR PESTICIDE CHEMICALS IN OR ON RAW AGRICULTURAL COMMODITIES

Therefore, 40 CFR 180.1011(a)(1) is amended to read as set forth below.

(Sec. 408, 68 Stat. 571; 21 U.S.C. 346(a))

Dated: June 25, 1980.

Steven D. Jellinek,

Assistant Administrator for Pesticides and Toxic Substances.

§ 180.1011 Viable spores of the microorganism Bacillus thuringiensis Berliner; exemption from the requirement of a tolerance.

(a) * * *

(1) The microorganism shall be an authentic strain of *Bacillus thuringiensis* Berliner conforming to the morphological and biochemical characteristics of *Bacillus thuringiensis* as described in Bergey's Manual of Determinative Bacteriology, Eighth Edition.

* * * * *

[FR Doc. 80-19522 Filed 6-27-80; 8:45 am]

BILLING CODE 6560-01-M

40 CFR Parts 712 and 762

[OPTS-00007; FRL 1528-2]

Reporting Requirements for Manufacturers and Processors of Fully Halogenated Chlorofluoroalkanes and Fully Halogenated Chlorofluoroalkanes; Recodification

AGENCY: Environmental Protection Agency (EPA).

ACTION: Final rule.

SUMMARY: Two separate parts have been issued as final regulations regarding chlorofluoroalkanes. Part 712 deals with recordkeeping while Part 762 addresses specific regulation of the substances. This document consolidates the two parts under a revised Part 762.

DATE: This final rule is effective June 30, 1980.

FOR FURTHER INFORMATION CONTACT: John Richards, (202) 426-2432.

SUPPLEMENTARY INFORMATION: In the Federal Register of March 17, 1978 (43 FR 11301) two separate parts were issued by EPA to regulate fully halogenated chlorofluoroalkanes. Part 712 represents the recordkeeping and reporting requirements while Part 762 represents the substantive regulation of the substances. In the interest of making the Code of Federal Regulations easier for the users to read and reference, both Parts are being consolidated into a revised Part 762.

For the convenience of the user, the following table shows the relationship of the old CFR section numbers under both Parts 712 and 762 to the new CFR section numbers under Part 762.

Old section	*New section*
712.1	762.1
712.2	762.3
712.3	762.65
712.4	762.70
712.5	762.60
762.1	762.1
762.2	762.3
762.11	762.45
762.12	762.50
762.13	762.55
762.21	762.58
762.22	762.59

This regulation is a nonsubstantive redesignation and reorganization and as such no opportunity for comment or public participation is required.

Dated: June 23, 1980.

Steven D. Jellinek,

Associate Administrator for Pesticides and Toxic Substances.

Therefore, Chapter I of Title 40, Subchapter R is amended by revoking Part 712 and revising Part 762 to read as follows:

PART 712—[Revoked]

1. Part 712 is hereby revoked.

2. Part 762 is revised to read as follows:

PART 762—FULLY HALOGENATED CHLOROFLUOROALKANES

Subpart A—General Provisions

Sec.
762.1 Scope.
762.3 Definitions.

Subpart B—[Reserved]

Subpart C—Prohibitions, Exemptions, and Certification Requirements

762.45 Manufacturing.
762.50 Processing.
762.55 Distribution in commerce.
762.58 Essential use exemptions.
762.59 Special exemptions.

Subpart D—Records and Reports

762.60 General reporting requirements.
762.65 Manufacturers of fully halogenated chlorofluoroalkanes for aerosol propellant uses.
762.70 Processors of fully halogenated chlorofluoroalkanes for aerosol propellant uses.

Authority: Toxic Substances Control Act, 15 U.S.C. 2605, 2607, and 2611.

Subpart A—General Provisions

§ 762.1 Scope.

This part prohibits the manufacture, processing, and distribution in commerce of fully halogenated chlorofluoroalkanes for those aerosol propellant uses which are subject to the Toxic Substances Control Act (TSCA), requires submission of annual reports, and lists the exemptions to the prohibitions.

§ 762.3 Definitions.

For the purposes of this part:

(a) The term "aerosol propellant" means a liquefied or compressed gas in a container where the purpose of the liquefied or compressed gas is to expel from the container liquid or solid material different from the aerosol propellant.

(b) The term "person" includes any natural person, corporation, firm, company, joint venture, partnership, sole proprietorship, association, or any other business entity, any State or political sub-division thereof, any municipality, any interstate body and any department, agency, or instrumentality of the Federal Government.

(c) The term "nonconsumer article" means any article subject to TSCA which is not a "consumer product" within the meaning of the Consumer Product Safety Act (CPSA), 15 U.S.C. 2052.

(d) The terms "Administrator," "chemical substance," "commerce," "distribute in commerce," "manufacture," "process," "processor," "State," and "United States" have the same meanings as in 15 U.S.C. 2602.

Subpart B—[Reserved]

Subpart C—Prohibitions, Exemptions, and Certification Requirements

§ 762.45 Manufacturing.

(a) After October 15, 1978, no person may manufacture, except to import, any fully halogenated chlorofluoroalkane for any aerosol propellant use except as follows:

(1) For use in an article which is a food, food additive, drug, cosmetic, or device exempted under 15 U.S.C. 2602; [1] or

(2) For those essential uses listed in § 762.58.

(3) For exempted uses listed in § 762.59.

(b) After December 15, 1978, no person may import into the customs territory of the United States any fully halogenated chlorofluoroalkane, whether as a chemical substance or as a component of a mixture or article, for any aerosol propellant use except as follows:

(1) For use in an article which is a food, food additive, drug, cosmetic, or device exempted under 15 U.S.C. 2602; or

(2) For those essential uses listed in § 762.58.

(3) For exempted uses listed in § 762.59.

[1] The Food and Drug Administration has promulgated separate regulations on use of fully halogenated chlorofluoroalkanes in these articles at 21 CFR 2.125.

(c) Every person manufacturing fully halogenated chlorofluoroalkanes for aerosol propellant uses after October 15, 1978, must obtain a signed statement from every person purchasing the fully halogenated chlorofluoroalkanes from him for any use. This statement must specify whether the fully halogenated chlorofluoroalkanes are being purchased (1) for aerosol propellant uses permitted under either 40 CFR Part 762 or 21 CFR 2.125, or (2) for other uses.

§ 762.50 Processing.

(a) After December 15, 1978, no person may process any fully halogenated chlorofluoroalkane into any aerosol propellant article except as follows:

(1) For use in an article which is a food, food additive, drug, cosmetic, or device exempted under 15 U.S.C. 2602; or

(2) For those essential uses listed in § 762.58.

(3) For exempted uses listed in § 762.59.

(b) After December 15, 1978, no person may process any fully halogenated chlorofluoroalkane into any aerosol propellant article intended for export except as follows:

(1) For use in an article which is a food, food additive, drug, cosmetic, or device exempted under 15 U.S.C. 2602; or

(2) For those essential uses listed in § 762.58.

(3) For exempted uses listed in § 762.59.

§ 762.55 Distribution in commerce.

After December 15, 1978, no person may distribute in commerce any fully halogenated chlorofluoroalkane for processing into any aerosol propellant article except as follows:

(a) For use in an article which is a food, food additive, drug, cosmetic, or device exempted under 15 U.S.C. 2602; or

(b) For those essential uses listed in § 762.58.

(c) For exempted uses listed in § 762.59.

§ 762.58 Essential use exemptions.

The following aerosol propellant uses of fully halogenated chlorofluoroalkanes are essential and exempt from §§ 762.45, 762.50 and 762.55:

(a) Mercaptan stench warning devices.

(b) Release agent for molds used in the production of plastic and elastomeric materials.

(c) Flying insect pesticides: (1) for use in nonresidential food handling areas, and (2) for space spraying of aircraft.

(d) Diamond-grit spray.

(e) Nonconsumer articles used as cleaner-solvents, lubricants, or coatings for electrical or electronic equipment.

(f) Articles necessary for safe maintenance and operation of aircraft.

(g) Uses essential to the military preparedness of the United States as determined by the Administrator and the Secretary of Defense.

§ 762.59 Special Exemptions.

(a) Inkless fingerprinting systems until August 1, 1981.

(b) Exemption for producers of pyrethrin pesticide formulations.

(1) Producers of pyrethrin pesticide formulations are exempt from § 762.50 for the purpose of processing fully halogenated chlorofluoroalkane aerosol propellants into pyrethrin aerosol propellant articles (containers) if the containers were ordered before June 30, 1978. This exemption is conditional upon notifying EPA before the chlorofluoroalkanes are processed of:

(i) The number of aerosol propellant article containers to be filled,

(ii) The date the aerosol containers were ordered from a supplier,

(iii) Any serial numbers that can be used to identify these containers, and

(iv) The quantity of fully halogenated chlorofluoroalkanes needed to fill the containers.

(2) The information specified in paragraph (b)(1) of this section must be sent to the Pesticides and Toxic Substances Enforcement Division, U.S. Environmental Protection Agency, 401 M St., SW., Washington, D.C. 20460.

Subpart D—Records and Reports

§ 762.60 General reporting requirements.

(a) Annual reports must be submitted by March 31, 1980, 1981, and 1982. The 1980 manufacturers report must cover manufacturing from October 16, 1978, through December 31, 1979. The 1980 processors report must cover processing from December 16, 1978, through December 31, 1979. Subsequent annual reports must provide information for the preceding calendar year.

(b) Annual reports must be submitted to the Pesticides and Toxic Substances Enforcement Division, Office of Enforcement (EN-342), Environmental Protection Agency, 401 M Street SW., Washington, D.C. 20460.

(c) Annual reports must be submitted by registered mail.

§ 762.65 Manufacturers of fully halogenated chlorofluoroalkanes for aerosol propellant uses.

(a) Every person who after October 15, 1978, manufactures fully halogenated chlorofluoroalkanes for aerosol propellant uses subject to the TSCA must submit an annual report.

(b) Every annual report submitted by a manufacturer must contain the following information and conform to the following format:

(1) Page one:

(i) Name of business,

(ii) Business address,

(iii) Chief executive officer,

(iv) Addresses of all facilities at which fully halogenated chlorofluoroalkanes are manufactured,

(v) Name, business address, and telephone number of individual most knowledgeable of the contents of this report. This report covers manufacture of fully halogenated chlorofluoroalkanes for aerosol propellant uses from (date to date).

(2) Page two (and subsequent pages if necessary):

Purchaser	Shipping addresses	Total quantity purchased (in pounds)	Quantity for aerosol propellant uses (in pounds)	Quantity for other uses (in pounds)
List name of customers who purchased for aerosol propellant uses	(List)	(List)	(List)	(List)

State total quantity in pounds of fully halogenated chlorofluoroalkanes manufactured for all uses for the time period covered by this report.

(3) At the bottom of the last page make the following statement and certification:

I understand that I may assert a claim of business confidentiality by marking any part or all of this information as "TSCA Confidential Business Information" and that information so marked will not be disclosed except in accordance with the procedures set forth in 40 CFR Part 2. I further understand that if I do not mark this information as confidential, EPA may disclose it publicly without providing me notice of an opportunity to object. I certify that to the best of my knowledge the contents of this report are accurate and complete.

Date _____

Signed _____

Position Title _____

(4) The statement and certification required by paragraph (b)(3) of this section must be signed by the chief executive officer of the manufacturer.

§ 762.70 Processors of fully halogenated chlorofluoroalkanes for aerosol propellant uses.

(a) Every person who after December 15, 1978, processes fully halogenated chlorofluoroalkanes for aerosol propellant uses subject to the TSCA must submit an annual report. A separate report must be submitted for each processing facility.

(b) Every report submitted by a processor must contain the following information and conform to the following format:

(1) Page one:

(i) Name of business,

(ii) Business address,

(iii) Chief executive officer,

(iv) Facility address,

(v) Name, business address, and telephone number of individual most knowledgeable of the contents of this report. This report covers purchases and processing of fully halogenated chlorofluoroalkanes for aerosol propellant uses from (date to date).

(2) Page two (and subsequent pages if necessary):

Purchases of fully halogenated chlorofluoroalkanes:

Purchased from/Quantity purchased (in pounds)

(List names and business addresses)/(List).

Processing of fully halogenated chlorofluoroalkanes:

Use and Quantity (in pounds)

1. Mercaptan mine warning device (list).
2. Release agent.
3. Pesticides.
4. Diamond-grit spray.
5. Electrical/electronic.
6. Aviation.
7. Defense.
8. Food, food additives, drugs, cosmetics, and devices.
9. Other (explain).

(3) At the bottom of the last page make the following statement and certification:

I understand that I may assert a claim of business confidentiality by marking any part or all of this information as "TSCA Confidential Business Information" and that information so marked will not be disclosed except in accordance with the procedures set forth in 40 CFR Part 2. I further understand that if I do not mark this information as confidential, EPA may disclose it publicly without providing me notice of an opportunity to object. I certify that to the best of my knowledge the contents of this report are accurate and complete.

Date _____

Signed _____

Position Title _____

(4) The statement and certification required by paragraph (b)(3) of this section must be signed by the highest official at the processing facility for which the report is being submitted.

[FR Doc. 80-19654 Filed 6-27-80; 8:45 am]

BILLING CODE 6560-01-M

NATIONAL AERONAUTICS AND SPACE ADMINISTRATION

41 CFR Ch. 18, Parts 1, 3, 7, 13, 15, Appendix O and Supplement 2

[Procurement Regulation Directive 79-4]

Procurement Regulations; Miscellaneous Amendments

AGENCY: National Aeronautics and Space Administration.

ACTION: Final rule.

SUMMARY: This document amends the NASA Procurement Regulation (41 CFR Ch. 18). It reflects amendments contained in Procurement Regulation Directive 79-4 concerning the following areas:

1. Equipment Visibility System Requirements
2. Cost Accounting Standards
3. Limitation of Liability-Major Items Clause Preambles
4. Allowable Cost and Payment Clause
5. Government Property
6. Supplement 2—File Maintenance, Closeout, and Disposition

EFFECTIVE DATE: June 30, 1980.

FOR FURTHER INFORMATION CONTACT: James H. Wilson, Policy Division (Code HP-1), Office of Procurement, NASA Headquarters, Washington, DC 20546, Telephone: 755-2237.

SUPPLEMENTARY INFORMATION: (1) Part 1.54 and Part 13.1 are revised to update and clarify NASA policies and procedures applicable to Equipment Visibility System Requirements.

(2) Recent changes and additions to the Cost Accounting Standards rules and regulations are reflected in revisions to Parts 3.1200, 7.104-55 and Appendix O (PRD 77-16 and 4 CFR) of the NASA Procurement Regulation as follows:

(a) Effective November 14, 1978, contracts and subcontracts awarded to foreign governments and their agencies and instrumentalities were exempted from all Cost Accounting Standards requirements. In addition, contracts and subcontracts awarded to foreign concerns were exempted from all Standards except 401 and 402 (see 4 CFR 331.30).

(b) The flow of information relative to CAS covered subcontract awards has been revised to require the contractor making such an award to notify the cognizant Contract Administration Office (CAO). The contractor's cognizant CAO will in turn notify the CAO cognizant of the subcontractor's facility.

(c) The Annual Report of Cost Accounting Standards Activity has been revised to reflect the newly authorized equitable adjustment alternative to the pricing of those voluntary accounting changes determined desirable and not detrimental to the interests of the Government (see 4 CFR 331.50).

(d) Newly promulgated Standards 413 on the Adjustment and Allocation of Pension Cost, and 416 on Accounting for Insurance Costs, have been added to Appendix O (see 4 CFR 413 and 416).

(3) The heading and date have been deleted from the preambles in 7.104-45 and 7.204-33 since the clauses in which the preambles will be inserted already have headings and dates.

(4) Parts 7.203-4(c)(8) and 7.203-4(c)(9) are added and Part 7.451-3 is revised in the interest of eliminating redundancy and to bring the NASA Procurement Regulation into closer alignment with the Defense Acquisition Regulation (DAR).

(5) Part 13.7 has been revised to require the use of the "Installation Provided Government Property" clause, when appropriate.

(6) Supplement 2 is editorially revised to correct cross references and reflect changes in the dollar value of contracts that require certain closeout and retirement actions.

(42 U.S.C. 2473(c)(1))

Leroy E. Hopkins,

Acting Director of Procurement.

PART 1—GENERAL PROVISIONS

1. In Part 1, 1.705-5(c)(2) (I), (J) and (K) are revised as follows:

1.705-5 Contracting with the Small Business Administration.

(c) ***

(2) ***

(I) Contract administration functions under the contract shall be in accordance with Part 20.

(J) The execution and distribution of procurement documents shall be in accordance with Part 20 and as set forth in 1.705-5(c)(1)(K) herein.

(K) Pricing of Construction Procurements, and Business Development Expense.

(i) In the determination of an estimated current fair market price for proposed construction contracts, the contracting officer shall consider data submitted by SBA and its subcontractor, current cost experience for like or similar work, and initial or revised

Government estimates of costs of work to be done. When the proposed total 8(a) contract price is no greater than the estimated current fair market price, the award will be made to SBA with full funding by NASA.

(ii) If the total proposed 8(a) contract price exceeds the estimated current fair market price (*i.e.*, it includes a business development expense), such expense shall not be funded by NASA. SBA has stated that it does not generally expect to assume business development expenses for construction. If SBA elects to pay such expenses, as an exception to its general rule, it will issue an SBA reimbursable order for the agreed amount to the NASA contracting officer in advance of contract award. If SBA requests audit assistance in determining the reasonableness of the proposed 8(a) price, such assistance will be furnished by NASA to the extent available. In the event SBA elects not to fund the business development expense, award will not be made to SBA unless the proposed contract price is reduced by the amount of such expense.

2. In Part 1, 1.5403 and 1.5404 are revised as follows:

1.5403 General. The Equipment Visibility System is a data acquisition and retrieval system designed to provide basic information for reutilization purposes about items of equipment valued at $1,000 or more held by NASA installations or NASA contractors. General purpose or standard items of commercial manufacture are registered in the EVS Central Data Bank (CDB).

1.5404 Interface with EVS Coordinators and Technical Project Office. NASA contracting officers with contracts subject to EVS requirements will maintain close interface with the installation EVS Coordinator and the Technical Project Office in (i) the conduct of contractor reporting to the EVS, (ii) the screening of EVS records prior to authorizing contractors to acquire equipment, (iii) the reporting and processing of equipment no longer required for NASA programs or projects and (iv) in all other matters pertaining to compliance with the property provisions of NASA contracts.

PART 3—PROCUREMENT BY NEGOTIATION

3. In Part 3, 3.501(b)(3), Part I—General Provisions, Section B, the introductory texts of (7)(B) and (7)(C) are revised as follows:

3.501 Preparation of Requests for Proposals or Request for Quotations.

* * * * *

(b) * * *

(3) * * *

Part I * * *

Sec. B * * *

(7) * * *

(B) In accordance with 3.1204–1(a)(vii)(A), the following notice:

* * * * *

(c) In accordance with 3.1204–1(b), the following notice:

* * * * *

4. In Part 3, 3.501(b)(3), Part I—General Provisions, Section C, paragraphs (8) and (36) are revised as follows:

* * * * *

(b) * * *

(3) * * *

Part I * * *

Sec. C * * *

(7) * * *

(8) notice to offerors of the possibility that award may be made without discussion of proposals (see 3.101(a)):

* * * * *

(36) requirements for a System Safety Program Plan in accordance with Part 14, Subpart 6 when the procurement covers a major hardware system and SEB procedures will be employed:

* * * * *

5. In Part 3, 3.1203(a) is revised as follows:

3.1203 Prime Contractor Disclosure Statement(s).

(a) *Solicitation Notice.* The notice entitled Disclosure Statement-Cost Accounting Practices and Certification in 3.501(b)(3) Section B (7)(A), shall be inserted in all solicitations which are likely to result in a negotiated contract exceeding $100,000, except when the price is (i) based on established catalog or market prices of commercial items sold in substantial quantities to the general public or (ii) set by law or regulation. The notice shall not be included in: solicitations limited to small business concerns; solicitations limited to educational institutions subject to the cost principles in Part 15, Subpart 3 (except that the notice shall be inserted in solicitations sent to Federally Funded Research and Development Centers operated by an educational institution); solicitations limited to a foreign government or an agency or instrumentality of such government; or solicitations which will result in contracts executed and performed in their entirety outside the United States, its territories and possessions.

* * * * *

3.501(b) [Amended]

6. In Part 3, 3.501(c), the paragraph referenced in the first sentence "3.501(b)(1)(A)" is amended to read "3.501(b)(3) Section B(7)(A)."

7. In Part 3, 3.1204–1 and 3.1204–2 are revised as follows:

3. 1204–1 Prime Contracts and Solicitations.

(a) The clauses in 7.104–55(a)(1) and (b) shall be inserted in all solicitations likely to result in a negotiated contract exceeding $100,000 and in all such contracts exceeding $100,000 unless exempt in accordance with the following:

(i) the price is based on established catalog or market prices of commercial items sold in substantial quantities to the general public, or is set by law or regulation. Catalog or market price exemption is determined to exist even though the award is made on the basis of adequate competition. It is the offeror's responsibility to request and to provide justification for a catalog or market price exemption. In providing such justification, the offeror shall (A) indicate in his proposal, and in any changes in his offered price, that the proposed price is based on an established catalog or market price of a commercial item sold in substantial quantities to the general public, rather than derived from the stimulus of competition which may be present in the particular procurement; and (B) complete and submit a DD Form 633–7 or otherwise furnish the necessary information in accordance with 3.807–3(i). However, the procuring activity must make a determination whether or not the exemption applies in each case;

(ii) contracts awarded to an offeror who has certified he is a small business concern pursuant to 3.501(b)(3) Section B(4);

(iii) contracts awarded to an educational institution subject to the cost principles in Part 15, Subpart 3, except for contracts to be performed by a Federally Funded Research and Development Center (FFRDC) operated by such an institution;

(iv) contracts with contractors who are eligible for and have elected to use modified contract coverage under Part 332 of Appendix O (see (b) below);

(v) contracts which are executed and performed in their entirety outside the United States, its territories and possessions;

(vi) contracts with a foreign government or an agency or instrumentality of such government; or

(vii) contracts for which the Cost Accounting Standards Board has approved other waiver or exemptions pursuant to Paragraph 331.30 of Appendix O.

(A) The Cost Accounting Standards Board has provided for the exemption of contracts of $500,000 or less under

certain circumstances. Paragraph 331.30(b)(8) of Appendix O prescribes the circumstances under which such an exemption is applicable. In order to administer the requirements of that paragraph effectively, the solicitation notice in 3.501(b)(3) Section B(7)(B) shall be inserted in all solicitations requiring the inclusion of the solicitation notice in 3.501(b)(3) Section B(7)(A).

(B) Contracts and subcontracts with foreign concerns are exempt from the requirements of Cost Accounting Standard 403 and all subsequent standards. This exemption does not relieve foreign concerns of any obligation to comply with CAS 401, CAS 402 or disclosure requirements.

(b) With respect to (a)(iv) and (vii) above, the clauses in 7.104–55(a)(2) and (b) shall be inserted in: (i) all solicitations likely to result in a negotiated contract exceeding $100,000, unless otherwise exempt in accordance with 3.1204–1(a), (ii) all such contracts with a foreign concern, and (iii) all such contracts exceeding $100,000 but under $10,000,000 when the offeror certifies he is eligible for and elects to use modified contract coverage under provisions of Part 332 of Appendix O (see (a)(iv) above). In order to administer this last exemption effectively, the solicitation notice in 3.501(b)(3) Section B (7)(C) shall be inserted in all solicitations requiring the inclusion of the solicitation notice in 3.501(b)(3) Section B (7)(A).

(c) When a contract contains the "Administration of Cost Accounting Standards" clause (7.104–55(b)) there is a requirement that a flow of information relative to CAS covered subcontract(s) be transmitted from the contractor placing the CAS covered subcontract, at whatever tier, to his cognizant contract administration office (CAO) and subsequently, through Government channels, to the CAO cognizant of the subcontractor receiving the order. When the CAO is advised by the contractor of such an award, it will within ten (10) days, forward the information required of the contractor by paragraph (e) of the clause in 7.104–55(b) to the cognizant CAO. (See 3.1208).

3.1204–2 Subcontracts.

(a) The clauses in 7.104–55 require contractors and subcontractors to flow-down the requirement to comply with Cost Accounting Standards in effect on the date of final agreement on price as shown on the subcontractor's signed certificate of current cost or pricing data, or date of award whichever is earlier unless the subcontractor is exempt from CAS requirements or the subcontractor qualifies for and elects to comply with the modified contract coverage clause.

(b) When a subcontractor accepts a CAS covered subcontract he is responsible for providing to the higher tier contractor the information specified in paragraph (e) of the clause in 7.104–55(b). The higher tier contractor will follow the procedure set forth in 3.1204–1(c) in transmitting the information through Government channels to the contract administration office cognizant of the subcontractor facility.

3.1208 [Amended]

8. In Part 3, 3.1208(a) is amended to change reference at the end of the first sentence from "20.604(c) (xxxi) through (xxxiv)" to read "20.604(d) (xxxi) through (xxxiv)" and 3.1208(c) is amended to change reference at the end of the paragraph "20.604(c)(xxxi) through (xxxiv)" to read "20.604(d)(xxxi) through (xxxiv)."

9. In Part 3, 3.1210(c) is revised as follows:

3.1210 Cost Accounting Standards Board Report.

* * * * *

(c) *Composition of Report.*

(1) *format:*

ANNUAL REPORT OF COST ACCOUNTING STANDARDS ACTIVITY FOR CALENDAR YEAR

NPR 3.1210

	Initial	Revisions
3. Disclosure Statement Reviews for Adequacy		
Statements Reviewed		
Statements Determined Inadequate		
2. Voluntary Changes		
Total in Process 1 Jan		
Total Received During Year		
Type I Actions Completed During Year		
Type II Actions Completed During Year		
Total Completed During Year		
Total in Process 31 Dec		
Total Net Costs Recovered on Type I Completed Actions	$	
Total Increases for Type II Completed Actions	$	
Total Decreases for Type II Completed Actions	$	
	Pre-award	Performance
3. Noncompliance Determinations		
Total in Process 1 Jan		
Total Received During Year		
Total Completed During year		
Total in Process 31 Dec		
Total Costs Recovered on Completed Noncompliance Actions		
4. Equitable Adjustments for New Standards		
Total in Process 1 Jan		
Total Received During Year		
Total Completed During Year		
Total in Process 31 Dec		
Total Increases for Completed Actions	$	
Total Decreases for Completed Actions	$	
5. NASA Board of Contract Appeals/Court of Claims Appeals		
Undecided Cases:		
NASA Board of Contract Appeals Docket Numbers	Company $	
Court of Claims Docket Numbers	Company $	
Total	$	
Cases Decided		Settlement

	Amount disputed	Contractor	Government
Docket Numbers	$	$	$

6. Suggestions and Recommendations for Revising CASB Standards, Rules and Regulations.

(2) *Special Instructions.*

(a) *Disclosure Statement Reviews for Adequacy.* This portion of the report is designed to show the number of Disclosure Statements from prime and subcontractors that have been reviewed by the cognizant contract administration office and the number that were found to be inadequate. Initial submission refers to that which is the first Disclosure Statement submitted by a contractor who was not previously required to disclose. Revised submission refers to substantive changes to a Disclosure Statement submitted by a contractor for whom a current Disclosure Statement is on file in a contract administration office. Resubmissions will not be counted. Informal discussions with contractors concerning their Disclosure Statements and voluntary corrections will not be reported.

(b) *Voluntary Changes.* Type I Voluntary Changes are those changes processed in accordance with paragraph (a)(4)(B) of the clause in 7.104–55(a)(1) (Cost Accouting Standards) or paragraph (a)(3) of the clause in 7.104–55(a)(2) (Disclosure and Consistency of Cost Accounting Practices). Type II Voluntary Changes are those changes processed in accordance with paragraph (a)(4)(C) of the clause in 7.104–55(a)(1) or paragraph (a)(5) of the clause in 7.104–55(a)(2). Only those cases on which final agreement has been reached on all issues including price adjustments, will be reported as completed.

(c) *Noncompliance Determinations.* The noncompliance determinations reported will be those where the prime or subcontractor has been formally notified of the noncompliance by the contract administration office in accordance with NPR 3.1212. For reporting purposes, cases will not be considered closed until the Government and the contractor arrive at a final agreement on all issues, including price adjustments, or the contract administration office has issued a unilateral determination or has withdrawn its determination of noncompliance. *"Pre-award"* refers to determinations on which the noncompliance affects only a contract proposal(s). If a determination involves existing contracts together with proposals or disclosed practices, it shall be reported as a performance determination only.

(d) *Equitable Adjustments for New Standards.* Only those cases on which the final agreement has been reached will be reported as completed.

(e) *Active NASA Board of Contract Appeals/Court of Claims Appeals.* The dollar amounts reported will be total expected recovery on Government contracts rather than token amounts usually cited in disputes. The amounts shown may reflect amounts previously or currently reported in Items 2–4 of the report.

(f) *Suggestions and Recommendations for Revising CASB Standards, Rules and Regulations.* Recommendations should include information citing the specific improvements to be expected from the proposed changes. If no suggestions are proposed, indicate "none."

10. In Part 3, 3.1213(a) is revised as follows:

3.1213 Administration of Equitable Adjustments for New Standards.

(a) *Additional Solicitation Notice.* Those solicitations required by 3.1203(a) to include the solicitation notice in 3.501(b)(3) Section B (7)(A) shall also include the notice entitled Additional Cost Accounting Standards Applicable to Existing Contracts in 3.501(b)(3) Section B (7)(D). The contracting officer shall assure that the successful contractor's response to the notice is made known to the cognizant contract administration office. This may be accomplished by attaching a copy of the response to the copy of the contract provided the contract administration office.

* * * * *

PART 7—CONTRACT CLAUSES

11. In Part 7, the Table of Contents, starting with paragraph 7.104–64 through 7.901–10 are revised as follows:

Table of Contents

Paragraph	Page
7.104-64 through 7.104-81 [Reserved]	7-1:21
7.104-82 Payment of Interest on Contractors' Claims	7-1:21
7.104-83 [Reserved]	7-1:21
7.104-84 Fast Payment Procedure	7-1:21
7.104-85 [Reserved]	7-1:21
7.104-86 Notification of changes	7-1:21
7.104-87 through 7.104-88 [Reserved]	7-1:22B
7.104-89 Engineering Change Proposals (ECP's)	7-1:22B
7.104-90 Change Order Accounting	7-1:22C
7.104-91 through 7.104-94 [Reserved]	7-1:22D
7.104-95 Preference for United States Flag Air Carriers	7-1:22D
7.104-96 Notice of Intent to Disallow or Not Recognize Costs	7-1:22E
7.105 Additional Changes	7-1:22E
7.105-1 Alterations in Contract	7-1:22E
7.105-2 through 7.105-4 [Reserved]	7-1:22E
7.105-5 Liquidated Damages	7-1:22F
7.105-6 Bill of Materials	7-1:22F
7.105-7 Supply Warranty	7-1:24
7.105-8 Stop Work Orders	7-1:24
7.106 Economic Price Adjustment Clauses (Established Prices)	7-1:24B
7.106-1 Price Adjustment Clause for Basic Steel, Aluminum, Brass, Bronze or Copper Mill Products	7-1:24B
7.106-2 Price Adjustment Clause for Nonstandard Steel Items	7-1:26
7.106-3 Price Adjustment Clause for Standard Supplies	7-1:28B
7.106-4 Price Adjustment Clause for Semistandard Supplies	7-1:30
7.107 Economic Price Adjustment Clause (Labor and Material)	7-1:32
7.108 Incentive Price Revision Clauses	7-1:32B
7.108-1 Firm Targets	7-1:32B
7.108-2 Successive Targets	7-1:38
7.109 Price Redetermination Clauses	7-1:46
7.109-1 General	7-1:46
7.109-2 Prospective Periodic Price Redetermination at Stated Intervals	7-1:46
7.109-3 Retroactive Price Redetermination After Completion	7-1:51

Subpart 2—Clauses for Cost-Type Supply Contracts

Paragraph	Page
7.200 Scope of Subpart	7-2:1
7.201 [Reserved]	7-2:1
7.202 Applicability	7-2:1
7.203 Required Clauses	7-2:1
7.203-1 Definitions	7-2:1
7.203-2 Changes	7-2:1
7.203-3 Limitation of Cost	7-2:2
7.203-4 Allowable Cost, Fee and Payment	7-2:3
7.203-5 Inspection of Supplies and Correction of Defects	7-2:7
7.203-6 Assignment of Claims	7-2:8
7.203-7 Examination of Records by Comptroller General	7-2:8
7.203-8 Subcontracts	7-2:8
7.203-9 Utilization of Small Business Concerns	7-2:10
7.203-10 Termination	7-2:10
7.203-11 Excusable Delays	7-2:10
7.203-12 Disputes	7-2:10
7.203-13 Renegotiation	7-2:10
7.203-14 Clean Air and Water	7-2:10
7.203-15 Convict Labor	7-2:10
7.203-16 Contract Work Hours Standards Act—Overtime Compensation	7-2:10
7.203-17 Walsh-Healey Public Contracts Act	7-2:10
7.203-18 Equal Opportunity	7-2:10
7.203-19 Officials Not To Benefit	7-2:10
7.203-20 Convenant Against Contingent Fees	7-2:10
7.203-21 Government Property	7-2:10
7.203-22 Insurance—Liability to Third Persons	7-2:10
7.203-23 Authorization and Consent	7-2:12
7.203-24 Notice and Assistance Regarding Patent and Copyright Infringement	7-2:12
7.203-25 [Reserved]	7-2:12
7.203-26 Utilization of Labor Surplus Area Concerns	7-2:12
7.203-27 Payment for Overtime Premiums	7-2:12
7.203-28 Competition in Subcontracting	7-2:12
7.203-29 Audit by National Aeronautics and Space Administration	7-2:12
7.203-30 Notice of Intent to Disallow or Not Recognize Costs	7-2:12
7.203-50 Payment of Royalties	7-2:12A
7.203-51 Estimated Cost and Fixed Fee	7-2:12A
7.203-52 Payment of Fixed Fee	7-2:12A
7.203-53 Interest	7-2:13
7.204 Clauses Required To Be Used When Applicable	7-2:13
7.204-1 Clauses for Contracts Involving Construction Work	7-2:13
7.204-2 Communist Areas	7-2:13
7.204-3 Buy American Act	7-2:13
7.204-4 Notice to the Government of Labor Disputes	7-2:13
7.204-5 [Reserved]	7-2:13
7.204-6 Filing of Patent Applications	7-2:13
7.204-7 New Technology	7-2:13
7.204-8 [Reserved]	7-2:13
7.204-9 Rights in Data	7-2:14
7.204-10 through 7.204-11 [Reserved]	7-2:14
7.204-12 Security Requirements	7-2:14
7.204-13 through 7.204-15 [Reserved]	7-2:14
7.204-15 Priorities, Allocations and Allotments	7-2:14
7.204-16 Negotiated Overhead Rates	7-2:14
7.204-17 [Reserved]	7-2:14
7.204-18 Limitation on Withholding of Payments	7-2:14
7.204-19 Small Business Subcontracting Program	7-2:14
7.204-20 Changes to Make-or-Buy Program	7-2:14A
7.204-21 Flight Risks	7-2:14A
7.204-22 Required Source for Jewel Bearings	7-2:14A
7.204-23 through 7.204-25 [Reserved]	7-2:14A
7.204-26 Preference for United States-Flag Vessels	7-2:14A
7.204-27 Frequency Authorization	7-2:14A
7.204-28 General Services Administration Supply Sources	7-2:14A
7.204-29 Labor Surplus Area Subcontracting Program	7-2:14A
7.204-30 Contractor and Subcontractor Certified Cost or Pricing Data	7-2:14A
7.204-31 Scientific and Technical Information Service	7-2:14A
7.204-32 [Reserved]	7-2:14A
7.204-33 Limitation of Liability	7-2:14A
7.204-50 Optional Data Requirements	7-2:14C
7.204-51 Approval of Contract	7-2:14C
7.204-52 [Reserved]	7-2:14C
7.204-53 Limitation of Government's Obligation	7-2:14C
7.204-54 Financial Reporting of Government-Owned/Contractor-Held Property	7-2:16A
7.204-55 Special Test Equipment	7-2:16A
7.204-56 NASA Financial Management Reporting	7-2:16A
7.204-57 Cost Accounting Standards	7-2:16A
7.204-58 Safety and Health	7-2:16A
7.204-59 Non-Use of Foreign-Flag Vessels Engaged in Cuban or North Vietnam Trade	7-2:16A
7.204-60 Report on NASA Subcontracts	7-2:16A
7.204-61 Rights in Data for Potentially Hazardous Items	7-2:16A
7.204-62 Potentially Hazardous Items	7-2:16A
7.204-63 Order of Precedence	7-2:16A
7.204-64 Preference for United States Flag Air Carriers	7-2:16A
7.204-65 through 7.204-85 [Reserved]	7-2:16A
7.204-86 Notification of Changes	7-2:16B
7.204-87 through 7.204-88 [Reserved]	7-2:16B
7.204-89 Engineering Change Proposals (ECP's)	7-2:16B
7.204-90 Change Order Accounting	7-2:16B
7.205 Additional Clauses	7-2:16B
7.205-1 Alterations in Contract	7-2:16B
7.205-2 through 7.205-3 [Reserved]	7-2:16B
7.205-4 Bill of Materials	7-2:16B
7.205-5 [Reserved]	7-2:16B
7.205-6 Stop Work Orders	7-2:16B
7.205-50 Notice of Delay	7-2:16B
7.205-51 [Reserved]	7-2:17
7.205-52 Date of Incurrence of Costs	7-2:17
7.205-53 Contractor's Independent Research Program	7-2:17
7.205-54 Reports of Work	7-2:17

Subpart 3—Clauses for Fixed-Price R&D Contracts

Paragraph	Page
7.300 Scope of Subpart	7-3:1
7.301 Applicability	7-3:1
7.302 Required Clauses	7-3:1
7.302-1 Definitions	7-3:1
7.302-2 Payments	7-3:1
7.302-3 Standards of Work	7-3:1
7.302-4 Inspection	7-3:1
7.302-5 Assignment of Claims	7-3:2
7.302-6 Examination of Records by Comptroller General	7-3:2
7.302-7 Federal, State, and Local Taxes	7-3:2
7.302-8 Utilization of Small Business Concerns	7-3:2
7.302-9 Default	7-3:2
7.302-10 Termination for the Convenience of the Government	7-3:2
7.302-11 Disputes	7-3:2
7.302-12 Renegotiation	7-3:2
7.302-13 Buy American Act	7-3:2
7.302-14 Convict Labor	7-3:2
7.302-15 Walsh-Healey Public Contracts Act	7-3:2
7.302-16 Contract Work Hours Standards Act-Overtime Compensation	7-3:2
7.302-17 Equal Opportunity	7-3:3
7.302-18 Officials Not To Benefit	7-3:3
7.302-19 Covenant Against Contingent Fees	7-3:3
7.302-20 Clean Air and Water	7-3:3
7.302-21 Authorization and Consent	7-3:3
7.302-22 Notice and Assistance Regarding Patent and Copyright Infringement	7-3:3
7.302-23 New Technology or Property Rights in Inventions	7-3:3
7.302-24 Rights in Data	7-3:3
7.302-25 Security Requirements	7-3:3
7.302-26 Utilization of Labor Surplus Area Concerns	7-3:3

Paragraph	Page
7.302-53 Interest	7-3:3
7.302-54 Reports of Work	7-3:3
7.302-55 Scientific and Technical Information Service	7-3:4
7.303 Clauses Required To Be Used When Applicable	7-3:4
7.303-1 Clauses for Contracts Involving Construction Work	7-3:4
7.303-2 Filing of Patent Applications	7-3:4
7.303-3 through 7.303-5 [Reserved]	7-3:4
7.303-6 Priorities, Allocations, and Allotments	7-3:5
7.303-7 Government Property	7-3:5
7.303-8 Communist Areas	7-3:5
7.303-9 Notice to the Government of Labor Disputes	7-3:5
7.303-10 Limitation on Withholding Payments	7-3:5
7.303-11 Small Business Subcontracting Programs	7-3:5
7.303-12 Subcontracts	7-3:5
7.303-13 through 7.303-16 [Reserved]	7-3:5
7.303-17 Ground and Flight Risk	7-3:5
7.303-18 through 7.303-22 [Reserved]	7-3:5
7.303-23 Progress Payments	7-3:5
7.303-24 Required Source for Jewel Bearings and Related Items	7-3:5
7.303-25 Labor Surplus Area Subcontracting Program	7-3:5
7.303-26 Frequency Authorization	7-3:5
7.303-27 Competition in Subcontracting	7-3:5
7.303-28 Contractor and Subcontractor Certified Cost or Pricing Data	7-3:5
7.303-29 Audit By National Aeronautics and Space Administration	7-3:5
7.303-30 Special Test Equipment	7-3:6
7.303-31 through 7.303-34 [Reserved]	7-3:6
7.303-35 Limitation of Liability	7-3:6
7.303-50 Optional Data Requirements	7-3:6
7.303-51 Approval of Contract	7-3:6
7.303-52 Preference for United States-Flag Vessels	7-3:6
7.303-53 Geographic Participation in the Aerospace Program	7-3:6
7.303-54 Financial Reporting of Government-Owned/Contractor-Held Property	7-3:6
7.303-55 Cost Accounting Standards	7-3:6
7.303-56 NASA Financial Management Reporting	7-3:6
7.303-57 Key Personnel and Facilities	7-3:6
7.303-58 Safety and Health	7-3:6
7.303-59 Non-Use of Foreign-Flag Vessels Engaged in Cuban or North Vietnam Trade	7-3:6
7.303-60 Report on NASA Subcontracts	7-3:6
7.303-61 Rights in Data for Potentially Hazardous Items	7-3:6
7.303-62 Potentially Hazardous Items	7-3:6
7.303-63 Pricing of Adjustments	7-3:6A
7.303-64 Order of Precedence	7-3:6A
7.303-65 Preference for United States Flag Air Carriers	7-3:6A
7.303-66 through 7.303-85 [Reserved]	7-3:6A
7.303-86 Notification of Changes	7-3:6A
7.303-87 through 7.303-88 [Reserved]	7-3:6A
7.303-89 Engineering Change Proposals (ECP's)	7-3:6A
7.303-90 Change Order Accounting	7-3:6A
7.304 Additional Clauses	7-3:6A
7.304-1 Changes	7-3:6A
7.304-2 Alterations in Contract	7-3:6B
7.304-3 [Reserved]	7-3:6B
7.304-4 Bill of Materials	7-3:6B
7.304-5 Stop Work Orders	7-3:6B
7.304-6 [Reserved]	7-3:7
7.304-7 [Reserved]	7-3:7
7.304-8 Warranty	7-3:7
7.304-50 Notice of Delay	7-3:7
7.304-51 Limitation of Government's Obligation	7-3:7
7.304-52 through 7.304-58 [Reserved]	7-3:8
7.304-59 Price Escalation	7-3:8
7.304-60 Incentive Price Revision	7-3:8
7.304-61 Special Tooling	7-3:8
7.350 Short Form Clauses for Fixed-Price Research Contracts With Nonprofit Institutions	7-3:8
7.350-1 Definitions	7-3:8
7.350-2 Payment	7-3:8
7.350-3 Rights in Data	7-3:9
7.350-4 Government-Furnished Property	7-3:9
7.350-5 Release of Information	7-3:9
7.350-6 Security	7-3:9
7.350-7 New Technology	7-3:10
7.350-8 Disputes	7-3:10
7.350-9 Termination at the Option of the Government	7-3:10
7.350-10 Authorization and Consent	7-3:10
7.350-11 Notice and Assistance Regarding Patent and Copyright Infringement	7-3:10
7.350-12 Buy American Act	7-3:10
7.350-13 Examination of Records by Comptroller General	7-3:10
7.350-14 Equal Opportunity	7-3:10
7.350-15 Covenant Against Contingent Fees	7-3:10
7.350-16 Officials Not To Benefit	7-3:10
7.350-17 Convict Labor	7-3:10
7.350-18 Audit By National Aeronautics and Space Administration	7-3:10A
7.350-19 Cost Accounting Standards	7-3:10A
7.350-20 Additional Clauses	7-3:10A
7.350-21 Clean Air and Water	7-3:10A
7.350-22 Notice of Intent to Disallow or Not Recognize Costs	7-3:10A

Subpart 4—Clauses for Cost-Type R&D Contracts

Paragraph	Page
7.400 Scope of Subpart	7-4:1
7.401 Applicability	7-4:1
7.402 Required Clauses for Contracts With Fee	7-4:1
7.401-1 Definitions	7-4:1
7.402-2 Limitation of Cost	7-4:1
7.402-3 Allowable Cost, Fixed-Fee, and Payment	7-4:1
7.402-4 Standards of Work	7-4:1
7.402-5 Inspection and Correction of Defects	7-4:1
7.402-6 Assignment of Claims	7-4:3
7.402-7 Examination of Records by Comptroller General	7-4:3
7.402-8 Subcontracts	7-4:3
7.402-9 Utilization of Small Business Concerns	7-4:4A
7.402-10 Termination	7-4:4A
7.402-11 Disputes	7-4:4A
7.402-12 Renegotiation	7-4:4A
7.402-13 Buy American Act	7-4:4A
7.402-14 Convict Labor	7-4:4A
7.402-15 Walsh-Healey Public Contracts Act	7-4:4A
7.402-16 Contract Work Hours Standards Act-Overtime Compensation	7-4:4A
7.402-17 Equal Opportunity	7-4:4A
7.402-18 Officials Not To Benefit	7-4:4A
7.402-19 Covenant Against Contingent Fees	7-4:4B
7.402-20 Authorization and Consent	7-4:4B
7.402-21 Notice and Assistance Regarding Patent and Copyright Infringement	7-4:4B
7.402-22 New Technology	7-4:4B
7.402-23 Rights in Data	7-4:5
7.402-24 Security Requirements	7-4:5
7.402-25 Government Property	7-4:6
7.402-26 Insurance-Liability to Third Persons	7-4:6
7.402-27 Utilization of Labor Surplus Area Concerns	7-4:6A
7.402-28 Payment for Overtime Premiums	7-4:6A
7.402-29 Competition in Subcontracting	7-4:6A
7.402-30 Audit by National Aeronautics and Space Administration	7-4:6A
7.402-31 Notice of Intent to Disallow or Not Recognize Costs	7-4:6A
7.402-50 Payment of Royalties	7-4:6A
7.402-51 Estimated Cost and Fixed Fee	7-4:6A
7.402-52 Payment of Fixed Fee	7-4:6A
7.402-53 Interest	7-4:6A
7.402-54 Reports of Work	7-4:6A
7.402-55 Scientific and Technical Information Service	7-4:6A
7.402-56 Clean Air and Water	7-4:6A
7.403 Clauses Required To Be Used When Applicable	7-4:6B
7.403-1 Clauses for Contracts Involving Construction Work	7-4:6B
7.403-2 Filing of Patent Applications	7-4:6B
7.403-3 Special Test Equipment	7-4:6B
7.403-4 [Reserved]	7-4:6B
7.403-5 Excusable Delays	7-4:6B
7.403-6 [Reserved]	7-4:6B
7.403-7 Priorities, Allocations, and Allotments	7-4:6B
7.403-8 Communist Areas	7-4:6B
7.403-9 Negotiated Overhead Rates	7-4:6B
7.403-10 Notice to the Government of Labor Disputes	7-4:6B
7.403-11 Contractor and Subcontractor Certified Cost or Pricing Data	7-4:7
7.403-12 Limitation on Withholding of Payments	7-4:7
7.403-13 Small Business Subcontracting Program	7-4:7
7.403-14 Changes to Make-or-Buy Program	7-4:7
7.403-15 Frequency Authorization	7-4:7
7.403-16 Flight Risks	7-4:7
7.403-17 Required Source for Jewel Bearings and Related Items	7-4:7
7.403-18 through 7.403-22 [Reserved]	7-4:7
7.403-23 General Services Administration Supply Sources	7-4:7
7.403-24 Labor Surplus Area Subcontracting Program	7-4:7
7.403-50 Optional Data Requirements	7-4:7
7.403-51 Approval of Contract	7-4:7
7.403-52 Preference for United States-Flag Vessels	7-4:7
7.403-53 Limitation of Government's Obligation	7-4:7
7.403-54 Financial Reporting of Government-Owned/Contractor-Held Property	7-4:8
7.403-55 Cost Accounting Standards	7-4:8
7.403-56 NASA Financial Management Reporting	7-4:8A
7.403-57 Key Personnel and Facilities	7-4:8A
7.403-58 Safety and Health	7-4:8A
7.403-59 Non-Use of Foreign-Flag Vessels Engaged in Cuban or North Vietnam Trade	7-4:8A
7.403-60 Report on NASA Subcontracts	7-4:8A
7.403-61 Rights in Data For Potentially Hazardous Items	7-4:8A
7.403-62 Potentially Hazardous Items	7-4:8A
7.403-63 Order of Precedence	7-4:8A
7.403-64 Preference for United States Air Carriers	7-4:8A
7.403-65 Geographic Participation in the Aerospace Program	7-4:8A
7.403-66 through 7.403-85 [Reserved]	7-4:8A
7.403-86 Notification of Changes	7-4:8A
7.403-87 through 7.403-88 [Reserved]	7-4:8A
7.403-89 Engineering Change Proposals (ECP's)	7-4:8A
7.403-90 Change Ordering Accounting	7-4:8A
7.404 Additional Clauses	7-4:8A
7.404-1 Changes	7-4:8A
7.404-2 Alterations in Contract	7-4:9
7.404-3 [Reserved]	7-4:9
7.404-4 Bill of Materials	7-4:9
7.404-5 Stop Work Orders	7-4:9
7.404-50 Notice of Delay	7-4:9
7.404-51 [Reserved]	7-4:9
7.404-52 Date of Incurrence of Costs	7-4:9
7.404-53 Inventions Made Under Contractor's Independent Research and Development Programs	7-4:9
7.404-54 through 7.404-56 [Reserved]	7-4:9
7.404-57 Federal, State, and Local Taxes	7-4:9
7.450 Clauses for Cost-Reimbursement Research and Development Contracts With Nonprofit Institutions (Including Educational Institutions)	7-4:9
7.450-1 Applicability	7-4:9
7.451 Required Clauses	7-4:9
7.451-1 Definitions	7-4:9
7.451-2 Limitation of Cost	7-4:9
7.451-3 Allowable Cost and Payment	7-4:10
7.451-4 Standards of Work	7-4:12
7.451-5 Inspection	7-4:12
7.451-6 Assignment of Claims	7-4:12
7.451-7 Examination of Records by Comptroller General	7-4:12
7.451-8 Subcontracts	7-4:13
7.451-9 Utilization of Small Business Concerns	7-4:13
7.451-10 Termination for the Convenience of the Government	7-4:13
7.451-11 Disputes	7-4:13
7.451-12 Renegotiation	7-4:13
7.451-13 Buy American Act	7-4:13
7.451-14 Convict Labor	7-4:13
7.451-15 Walsh-Healey Public Contracts Act	7-4:13
7.451-16 Contract Work Hours Standards Act-Overtime Compensation	7-4:13
7.451-17 Equal Opportunity	7-4:13
7.451-18 Officials Not To Benefit	7-4:13
7.451-19 Covenant Against Contingent Fees	7-4:13
7.451-20 Authorization and Consent	7-4:13
7.451-21 Notice and Assistance Regarding Patent and Copyright Infringement	7-4:13
7.451-22 New Technology	7-4:13
7.451-23 Rights in Data	7-4:14
7.451-24 Security Requirements	7-4:14
7.451-25 Government Property	7-4:14A
7.451-26 Insurance-Liability to Third Persons	7-4:14A
7.451-27 Utilization of Labor Surplus Area Concerns	7-4:14A
7.451-28 Payment for Overtime Premiums	7-4:14A
7.451-29 Competition in Subcontracting	7-4:14A
7.451-30 Audit by National Aeronautics and Space Administration	7-4:14A
7.451-31 Notice of Intent to Disallow or Not Recognize Costs	7-4:14B
7.451-50 Payment of royalties	7-4:14B
7.451-51 Estimated Cost	7-4:14B
7.451-52 Clean Air and Water	7-4:14B
7.451-53 [Reserved]	7-4:14B
7.451-54 Reports of Work	7-4:14B

Paragraph	Page
7.451-55 Scientific and Technical Information Service	7-4:14B
7.451 Clauses Required To Be Used When Applicable	7-4:14B
7.452-1 Clauses for Contracts Involving Construction Work	7-4:14B
7.452-2 Filing of Patent Applications	7-4:15
7.452-3 Special Test Equipment	7-4:15
7.452-4 Advance Payments	7-4:15
7.452-5 through 7.452-6 [Reserved]	7-5:19
7.452-7 Priorities, Allocations, and Allotments	7-4:19
7.452-8 Communist Areas	7-4:19
7.452-9 Negotiated Overhead Rates	7-4:19
7.452-10 Notice to the Government of Labor Disputes	7-4:20
7.452-11 Contractor and Subcontractor Certified Cost or Pricing Data	7-4:20
7.452-12 Limitation on Withholding of Payments	7-4:20
7.452-13 Small Business Subcontracting Program	7-4:20
7.452-14 Changes to Make-or-Buy Program	7-4:20
7.452-15 Frequency Authorization	7-4:20
7.452-16 Required Source for Jewel Bearings and Related Items	7-4:20
7.452-17 through 7.452-22 [Reserved]	7-4:20
7.452-23 General Services Administration Supply Sources	7-4:20
7.452-24 Labor Surplus Area Subcontracting Program	7-4:20
7.452-50 Optional Data Requirements	7-4:20
7.452-51 Approval of Contract	7-4:20
7.452-52 Preference for United States-Flag Vessels	7-4:20
7.452-53 Limitation of Government's Obligations	7-4:20
7.452-54 Financial Reporting of Government-Owned/Contractor-Held Property	7-4:21
7.452-55 Cost Accounting Standards	7-4:21
7.452-56 NASA Financial Management Reporting	7-4:21
7.452-57 Key Personnel and Facilities	7-4:21
7.452-58 Safety and Health	7-4:21
7.452-59 Non-Use of Foreign-Flag Vessels Engaged in Cuban and North Vietnam Trade	7-4:21
7.452-60 Report on NASA Subcontracts	7-4:21
7.452-61 Rights in Data for Potentially Hazardous Items	7-4:21
7.452-62 Potentially Hazardous Items	7-4:21
7.452-63 Order of Precedence	7-4:21
7.452-64 through 7.452-85 [Reserved]	7-4:21
7.452-86 Notification of Changes	7-4:21
7.452-87 and 7.452-88 [Reserved]	7-4:21
7.452-89 Engineering Change Proposals (ECP's)	7-4:21
7.452-90 Change Order Accounting	7-4:21
7.453 Additional Clauses	7-4:21
7.453-1 Changes	7-4:21
7.453-2 Alterations in Contract	7-4:22
7.453-3 [Reserved]	7-4:22
7.453-4 Bill of Materials	7-4:22
7.453-50 Notice of Delay	7-4:22
7.453-51 [Reserved]	7-4:22
7.453-52 Date of Incurrence of Costs	7-4:22
7.453-53 Contractor's Independent Research Program	7-4:22
7.453-54 through 7.453-56 [Reserved]	7-4:22
7.453-57 Federal, State, and Local Taxes	7-4:22
7.453-58 Excusable Delays	7-4:23
7.460 Short Form Clauses for Cost-Reimbursement Type Research Contracts With Nonprofit Institutions (Including Educational Institutions)	7-4:23
7.460-1 Definitions	7-4:23
7.460-2 Limitation of Cost	7-4:23
7.460-3 Government Property	7-4:23
7.460-4 Cost Accounting Standards	7-4:23
7.460-5 Insurance-Liability to Third Persons	7-4:23
7.460-6 Examination of Records by Comptroller General	7-4:23
7.460-7 Release of Information	7-4:23
7.460-8 New Technology	7-4:23
7.460-9 Rights in Data	7-4:23
7.460-10 Authorization and Consent	7-4:23
7.460-11 Notice and Assistance Regarding Patent and Copyright Infringement	7-4:23
7.460-12 Security	7-4:23
7.460-13 Disputes	7-4:23
7.460-14 Termination	7-4:24
7.460-15 Buy American Act	7-4:24
7.460-16 Equal Opportunity	7-4:24
7.460-17 Covenant Against Contingent Fees	7-4:24
7.460-18 Officials Not To Benefit	7-4:24
7.460-19 Convict Labor	7-4:24
7.460-20 Allowable Cost and Payment	7-4:24
7.460-21 Audit by National Aeronautics and Space Administration	7-4:24
7.460-22 Clean Air and Water	7-4:24
7.460-23 Notice of Intent to Disallow or Not Recognize Costs	7-4:24
7.461 Additional Clauses	7-4:24
	7-5:1

Subpart 5—Clauses for Personal Services Contracts

Subpart 6—Clauses for Construction and A-E Contracts

Paragraph	Page
7.600 through 7.606 [Reserved]	7-6:1
7.607 Required Clauses for Fixed-Price Architect-Engineer Contracts	7-6:1
7.607-1 Definitions	7-6:1
7.607-2 Responsibility of the Architect-Engineer	7-6:1
7.607-3 Changes	7-6:1
7.607-4 Termination	7-6:1
7.607-5 Disputes	7-6:2
7.607-6 Assignment of Claims	7-6:3
7.607-7 Architectural Designs and Data-Government Rights	7-6:3
7.607-8 Examination of Records by Comptroller General	7-6:4
7.607-9 Covenant Against Contingent Fees	7-6:4
7.607-10 Officials Not to Benefit	7-6:4
7.607-11 Contract Work Hours and Safety Standards Act-Overtime Compensation	7-6:4
7.607-12 Convict Labor	7-6:5
7.607-13 Equal Opportunity Clause	7-6:5
7.607-14 Method of Payment	7-6:6
7.607-15 Contracting Officer's Decisions	7-6:7
7.607-16 Subcontractors and Outside Associates and Consultants	7-6:7
7.607-17 Renegotiation	7-6:7
7.607-18 Payment of Interest on Contractors' Claims	7-6:7
7.607-19 Interest	7-6:7
7.607-20 Composition of Architect-Engineer	7-6:7
7.607-21 Pricing of Adjustments	7-6:7
7.607-22 Listing of Employment Openings	7-6:7
7.607-23 Clean Air and Water	7-6:7
7.608 Clauses To Be Used When Applicable for Fixed-Price Architect-Engineer Contracts	7-6:7
7.608-1 [Reserved]	7-6:7
7.608-2 [Reserved]	7-6:7
7.608-3 Redesign Responsibility	7-6:7
7.608-4 [Reserved]	7-6:8
7.608-5 Option for Supervision and Inspection Services	7-6:8
7.608-6 Requirements for Registration of Designers	7-6:9
7.608-7 [Reserved]	7-6:9
7.608-8 Security Requirements	7-6:9
7.608-9 Contractor and Subcontractor Certified Cost or Pricing Data	7-6:9
7.608-10 [Reserved]	7-6:9
7.608-11 [Reserved]	7-6:9
7.608-12 Authorization and Consent	7-6:9
7.608-13 [Reserved]	7-6:9
7.608-14 New Technology	7-6:9
7.608-15 Filing of Patent Applications	7-6:9
7.608-16 Alterations in Contract	7-6:9
7.608-17 Rights in Data	7-6:9
7.608-18 Cost Accounting Standards	7-6:9
7.608-19 Audit by National Aeronautics and Space Administration	7-6:10

Subpart 7—Clauses for Facilities Contracts

Paragraph	Page
7.701 Applicability	7-7:1
7.702 Required Clauses for Consolidated Facilities Contracts	7-7:1
7.702-1 Definitions	7-7:1
7.702-2 Facilities to be Provided	7-7:1
7.702-3 Late Delivery, Diversion, and Substitution	7-7:1
7.702-4 Changes	7-7:2
7.702-5 Representations and Warranties	7-7:2
7.702-6 Inspection	7-7:3
7.702-7 Excusable Delays	7-7:3
7.702-8 Location of the Facilities	7-7:3
7.702-9 Government Bills of Lading	7-7:4
7.702-10 Allowable Cost and Payment	7-7:4
7.702-11 Limitation of Cost	7-7:5
7.702-12 Use and Charges	7-7:5
7.702-13 Examination of Records	7-7:8
7.702-14 Maintenance	7-7:8
7.702-15 Title	7-7.8
7.702-16 Access	7-7:9
7.702-17 Property Control	7-7:9
7.702-18 Liability for the Facilities	7-7:10
7.702-19 Insurance-Liability to Third Persons	7-7:11
7.702-20 Indemnification of the Government.	7-7:12
7.702-21 Stop Work Orders	7-7:12
7.702-22 Termination of Work	7-7:13
7.702-23 Notice of Use of the Facilities	7-7:15
7.702-24 Termination of the Use of the Facilities	7-7:16
7.702-25 Period of this Contract	7-7:16
7.702-26 Disposition of the Facilities	7-7:16
7.702-27 Failure to Perform	7-7:16
7.702-28 Disputes	7-7:16A
7.702-29 Security Requirements	7-7:16A
7.702-30 Authorization and Consent	7-7:16A
7.702-31 Notice and Assistance Regarding Patent and Copyright Infringement	7-7:19
7.702-32 Clean Air and Water	7-7:19
7.702-33 Subcontracts	7-7:19
7.702-34 Utilization of Small Business Concerns	7-7:19
7.702-35 Utilization of Labor Surplus Area Concerns	7-7:19
7.702-36 Buy American Act	7-7:19
7.702-37 Assignment of Claims	7-7:19
7.702-38 Renegotiation	7-7:19
7.702-39 Officials Not To Benefit	7-7:19
7.702-40 [Reserved]	7-7:19
7.702-41 Covenant Against Contingent Fees	7-7:19
7.702-42 Payment for Overtime Premiums	7-7:19
7.702-43 Convict Labor	7-7:19
7.702-44 Equal Opportunity	7-7:19
7.702-45 Walsh-Healey Public Contracts Act	7-7:19
7.702-46 Contract Work Hours Standards Act-Overtime Compensation	7-7:19
7.702-47 Contractor and Subcontractor Certified Cost or Pricing Data	7-7:19
7.702-48 Audit by National Aeronautics and Space Administration	7-7:19
7.702-49 Financial Reporting of Government-Owned/Contractor-Held Property	7-7:19
7.702-50 Competition in Subcontracting	7-7:19
7.702-51 Interest	7-7:19
7.702-52 Notice to the Government of Labor Disputes	7-7:19
7.702-53 General Services Administration Supply Sources	7-7:19
7.702-54 Limitation on Withholding of Payments	7-7:19
7.702-55 Payment of Royalties	7-7:20
7.702-56 Property Listings	7-7:20
7.702-57 Small Business Subcontracting Program	7-7:20
7.702-58 Supersedure	7-7:21
7.702-59 Report on NASA Subcontracts	7-7:21
7.702-60 Notice of Intent to Disallow or Not Recognize Costs	7-7:21
7.703 Required Clauses for Facilities Acquisition Contracts	7-7:21
7.703-1 Definitions	7-7:22
7.703-2 Facilities To Be Provided	7-7:22
7.703-3 Late Delivery, Diversion, and Substitution	7-7:22
7.703-4 Changes	7-7:22
7.703-5 Representations and Warranties	7-7:22
7.703-6 Inspection	7-7:22
7.703-7 Excusable Delays	7-7:22
7.703-8 Government Bills of Lading	7-7:22
7.703-9 Allowable Cost and Payment	7-7:22
7.703-10 Limitation of Cost	7-7:23
7.703-11 Examination of Records	7-7:23
7.703-12 Title	7-7:23
7.703-13 Access	7-7:23
7.703-14 Liability for the Facilities	7-7:23
7.703-15 Insurance-Liability to Third Persons	7-7:23
7.703-16 Indemnification of the Government.	7-7:23
7.703-17 Stop Work Orders	7-7:23
7.703-18 Termination of Work	7-7:23
7.703-19 Failure to Perform	7-7:23
7.703-20 Disputes	7-7:23
7.703-21 Security Requirements	7-7:23
7.703-22 Authorization and Consent	7-7:23
7.703-23 Notice and Assistance Regarding Patent and Copyright Infringement	7-7:23
7.703-24 Clean Air and Water	7-7:23
7.703-25 Subcontracts	7-7:23
7.703-26 Utilization of Small Business Concerns	7-7:23
7.703-27 Utilization of Labor Surplus Area Concerns	7-7:23
7.703-28 Buy American Act	7-7:24
7.703-29 Assignment of Claims	7-7:24
7.703-30 Renegotiation	7-7:24
7.703-31 Officials Not To Benefit	7-7:24
7.703-32 [Reserved]	7-7:24
7.703-33 Covenant Against Contingent Fees	7-7:24

Paragraph		Page
7.703-34	Payment for Overtime Premiums	7-7:24
7.703-35	Convict Labor	7-7:24
7.703-36	Equal Opportunity	7-7:24
7.703-37	Walsh-Healey Public Contracts Act	7-7:24
7.703-38	Contract Work Hours Standards Act-Overtime Compensation	7-7:24
7.703-39	Supersedure	7-7:24
7.703-40	Contractor and Subcontractor Certified Cost or Pricing Data	7-7:24
7.703-41	Audit by National Aeronautics and Space Administration	7-7:24
7.703-42	[Reserved]	7-7:24
7.703-43	Competition in Subcontracting	7-7:24
7.703-44	Interest	7-7:25
7.703-45	Notice to the Government of Labor Disputes	7-7:25
7.703-46	General Services Administration Supply Sources	7-7:25
7.703-47	Limitation on Withholding of Payments	7-7:25
7.703-48	Payment of Royalties	7-7:25
7.703-49	Small Business Subcontracting Program	7-7:25
7.703-50	Report on NASA Subcontracts	7-7:25
7.703-51	Notice of Intent to Disallow or Not Recognize Costs	7-7:25
7.704	Required Clauses for Facilities Use Contracts	7-7:25
7.704-1	Definitions	7-7:25
7.704-2	Use and Charges	7-7:25
7.704-3	Allowable Cost and Payment	7-7:25
7.704-4	Limitation of Cost	7-7:26
7.704-5	Examination of Records	7-7:26
7.704-6	Location of the Facilities	7-7:26
7.704-7	Maintenance	7-7:26
7.704-8	Inspection	7-7:26
7.704-9	Title	7-7:26
7.704-10	Access	7-7:26
7.704-11	Property Control	7-7:26
7.704-12	Representations and Warranties	7-7:26
7.704-13	Government Bills of Lading	7-7:26
7.704-14	Liability for the Facilities	7-7:26
7.704-15	Indemnification of the Government	7-7:26
7.704-16	Notice of Use of the Facilities	7-7:26
7.704-17	Termination of the Use of the Facilities	7-7:26
7.704-18	Period of This Contract	7-7:26
7.704-19	Disposition of the Facilities	7-7:26
7.704-20	Failure to Perform	7-7:26A
7.704-21	Disputes	7-7:26A
7.704-22	Security Requirements	7-7:26A
7.704-23	Assignment of Claims	7-7:26A
7.704-24	Officials Not To Benefit	7-7:26A
7.704-25	Clean Air and Water	7-7:26A
7.704-26	Covenant Against Contingent Fees	7-7:26A
7.704-27	Payment for Overtime Premiums	7-7:26A
7.704-28	Convict Labor	7-7:26A
7.704-29	Equal Opportunity	7-7:26A
7.704-30	Contract Work Hours Standards Act-Overtime Compensation	7-7:26A
7.704-31	Supersedure	7-7:26A
7.704-32	[Reserved]	7-7:26A
7.704-33	Audit By National Aeronautics and Space Administration	7-7:26A
7.704-34	Financial Reporting of Government-Owned Contractor-Held Property	7-7:26A
7.704-35	Competition in Subcontracting	7-7:26A
7.704-36	Interest	7-7:26A
7.704-37	Property Listings	7-7:26A
7.704-38	Utilization of Small Business Concerns	7-7:26A
7.704-39	Notice of Intent to Disallow or Not Recognize Costs	7-7:26B
7.705	Clauses Required To Be Used When Applicable	7-7:26B
7.705-1	Rights in Data	7-7:26B
7.705-2	Filing of Patent Applications	7-7:26B
7.705-3	Priorities, Allocations, and Allotments	7-7:26B
7.705-4	Transfer of Title to the Facilities	7-7:26B
7.705-5	Labor Standards for Construction Work	7-7:26B
7.705-6	Buy American Act-Construction Contracts	7-7:27
7.705-7	Improvements to Buildings or Land Owned by the Government	7-7:27
7.705-8	New Technology	7-7:28
7.705-9	Required Source for Jewel Bearings and Related Items	7-7:28
7.705-10	Changes to Make-or-Buy Program	7-7:28
7.705-11	Contractor and Subcontractor Certified Cost or Pricing Data	7-7:28
7.705-12	Negotiated Overhead Rates	7-7:28
7.705-13	Rights in Data for Potentially Hazardous Items	7-7:28
7.705-14	Potentially Hazardous Items	7-7:28
7.705-15	Safety and Health	7-7:28
7.705-16	Order of Precedence	7-7:28
7.705-17	Facilities Equipment Modernization	7-7:28
7.705-18 through 7.705-29	[Reserved]	7-7:28B
7.705-30	Preference for United States Flag Air Carriers	7-7:28B
7.705-31	Use of Small Business Concerns as Subcontractors	7-7:28C
7.706	Facilities Use Contracts With Nonprofit Educational Institutions	7-7:28B
7.706-1	Purpose	7-7:28B
7.706-2	Accountable Facilities	7-7:28C
7.706-3	Definitions	7-7:28C
7.706-4	Use of Government Facilities	7-7:28C
7.706-5	Allowable Costs and Payments	7-7:28C
7.706-6	Examination of Records by Comptroller General	7-7:29
7.706-7	Location of the Facilities	7-7:29
7.706-8	Maintenance	7-7:29
7.706-9	Inspection	7-7:29
7.706-10	Title	7-7:29
7.706-11	Access	7-7:29
7.706-12	Property Control	7-7:30
7.706-13	Representation and Warranties	7-7:30
7.706-14	Liability for the Facilities	7-7:30
7.706-15	Termination of the Use of the Facilities	7-7:30
7.706-16	Period of This Contract	7-7:30
7.706-17	Disposition of the Facilities	7-7:30
7.706-18	Disputes	7-7:30
7.706-19	Officials Not To Benefit	7-7:30
7.706-20	Financial Reporting of Government-Owned/Contractor-Held Property	7-7:30
7.706-21	Covenant Against Contingent Fees	7-7:30
7.706-22	Convict Labor	7-7:30
7.706-23	Equal Opportunity	7-7:30
7.706-24	Contract Work Hours Standards Act-Overtime Compensation	7-7:30
7.706-25	Supersedure	7-7:30
7.706-26	Clean Air and Water	7-7:31
7.706-27	Notice of Intent to Disallow or Not Recognize Costs	7-7:31
		7-8:1

Subpart 8—[Reserved]

Subpart 9—Time and Material and Labor Hour Contracts

7.900	Scope of Subpart	7-9:1
7.901	Required Clauses	7-9:1
7.901-1	Definitions	7-9:1
7.901-2	Changes	7-9:1
7.901-3	Excusable Delays	7-9:1
7.901-4	Termination	7-9:1
7.901-5	Government Property	7-9:4
7.901-6	Payments	7-9:4
7.901-7	Assignment of Claims	7-9:7
7.901-8	Disputes	7-9:7
7.901-9	Convict Labor	7-9:7
7.901-10	Subcontracts	7-9:7

12. In Part 7, 7.104-24 is revised as follows:

7.104-24 Government Property. In accordance with 13.702 insert the appropriate clause(s) required therein.

7.104-45 [Amended]

13. In 7.104-45(b) delete the title preceding the preamble in paragraph (g) of the clause.

7.104-45 [Amended]

14. In 7.104-45(c) delete the title preceding the preamble.

15. In Part 7, 7.104-55(a)(2) is revised as follows:

7.104-55 Cost Accounting Standards

* * * * *

(2) In accordance with 3.1204-1(b), the following clause shall be inserted in all solicitations likely to result in a negotiated contract exceeding $100,000. If the contractor is eligible under the conditions of 4 CFR 332 to use the following clause and elects to do so pursuant to the instructions in the solicitation notice (3.501(b)(3) Section B (7)(C)), or if the contractor is a foreign concern, the clause shall be inserted in any resulting contract in lieu of the clause set forth in 7.104-55(a)(1) above.

7.104-55 [Amended]

16. In 7.104-55(b) the date of the clause is changed to read April 1979 in place of May 1978.

17. In Part 7, 7.104-55(b), in the clause entitled Administration of Cost Accounting Standards the second sentence of subparagraph (e) is revised as follows:

* * * * *

(b) * * *

(e) Administration of Cost Accounting Standards * * *

In addition, within thirty (30) days after award of such a subcontract, submit the following information to the contract administration office cognizant of the Contractor's facility for transmittal to the contract administration office cognizant of the subcontractor's facility.

(1) Subcontractor's name and subcontract number.

(2) Dollar amount and date of award.

(3) Name of Contractor making the award.

(4) A statement as to whether the subcontractor has made or proposes to make any changes to accounting practices that affect prime contracts or subcontracts containing the "Cost Accounting Standards" clause or "Disclosure and Consistency of Cost Accounting Practices" clause because of the award of this subcontract unless such changes have already been reported. If award of the subcontract results in making a Cost Accounting Standard(s) effective for the first time, this shall also be reported.

7.203-4 [Amended]

18. In Part 7, 7.203-4(c)(5)(iv) the phrase ". . . in contracts which provide for cost-sharing," is deleted.

19. In Part 7, 7.203-4(c), paragraphs (8) and (9) are added as follows:

(8) In contracts without fee with nonprofit institutions (including educational institutions), the sentence set forth in (5)(ii) above may be amended by substituting "ten thousand dollars ($10,000)" for "one hundred thousand dollars ($100,000).". Further, whenever the contracting officer deems it to be in the best interest of the Government, the sentence of (5)(ii) may be deleted in its entirety. If the sentence of (5)(ii) is so omitted, delete from the first sentence of paragraph (e) the words "and any part of the fixed fee, which has been withheld pursuant to (c) or otherwise."

(9) In contracts without fee with educational institutions, change

"Subpart 2" to read "Subpart 3" in paragraph (a)(i)(A) in (a) above.

20. In Part 7, 7.203–21 is revised as follows:

7.203–21 Government Property. In accordance with 13.703, insert the clause(s) required therein.

7.204–33 [Amended]

21. In Part 7, 7.204–33(a) the title preceding the preamble in paragraph (g) of the clause "Limitation of Liability—Major Items" is deleted. In the sentence following the preamble the words "Contracting Officer" is amended to read "Contractor".

22. In Part 7, 7.204–33(b) the title "Limitation of Liability—Major Items (June 1978)" preceding the preamble to the clause is deleted.

23. In Part 7, 7.451–3 is revised as follows:

7.451–3 Allowable Cost and Payment. Insert the clause set forth in 7.203–4(a), modified in accordance with 7.203–4(c)(5) and, as appropriate, 7.203–4(c)(8) and (9).

24. In Part 7, 7.451–25 is revised as follows:

7.451–25 Government Property. In accordance with 13.707, insert the appropriate clause(s) required therein.

25. In Part 7, 7.460–3 is revised as follows:

7.460–3 Government Property. In accordance with 13.707, insert the clause(s) required therein.

PART 13—GOVERNMENT PROPERTY

26. In Part 13, 13.119 is deleted and marked reserved.

27. In Part 13, 13.702 is revised as follows:

13.702 Government Property Clauses for Fixed-Price Contracts. The appropriate clause of those set forth in paragraphs (a) and (c) below and/or in 13.311 or 13.710 shall be used, in accordance with the instructions therein. In fixed-price contracts (except for experimental, developmental, or research work with educational or nonprofit institutions, where no profit to the contract is contemplated).

28. In Part 13, 13.703 is revised as follows:

13.703 Government Property Clause for Cost-Reimbursement Contracts. The following clause and/or the clause in 13.311 shall be used in cost-reimbursement contracts for supplies and services (except contracts for experimental, developmental, or research work with educational or nonprofit institutions, where no profit to the contractor is contemplated) under which NASA is to furnish to the contractor, or the contractor is to acquire, Government property.

29. In Part 13, 13.706 is revised as follows:

13.706 Government Property Clause for Fixed-Price Type Contracts With Nonprofit Institutions.

The following clause and/or the clause in 13.311 shall be used in fixed-price research and development contracts with nonprofit institutions (*provided* such contracts are executed on a nonprofit basis) under which NASA is to furnish to the contractor, or the contractor is to acquire, Government property.

30. In Part 13, 13.707 is revised as follows:

13.707 Government Property Clauses for Cost-Reimbursement Type Research and Development Contracts With Nonprofit Institutions.

Except in facilities contracts, when NASA is to furnish the contractor, or the contractor is to acquire, Government property, insert the following clause and/or the clause in 13.311 if the contract is with an educational or nonprofit institution; if not, insert the clause set forth in 13.703.

31. In Part 13, 13.709 is revised as follows:

13.709 Clause for Government Property Furnished "As Is". The following clause shall be inserted in all contracts in which Government production and research property is furnished "as is" in accordance with 13.206.

32. In Part 13, 13.710 is revised as follows:

13.710 Government-Furnished Property Clause (Short Form).

The following short form clause and/or the clause in 13.311 may be used in contracts under which the Government is to furnish to the contractor Government property having an acquisition cost of $25,000 or less.

PART 15—CONTRACT COST PRINCIPLES AND PROCEDURES

33. In Part 15, the Table of Contents is revised as follows:

Subpart 1—Applicability

Paragraph		Page
15.000	Scope of Part	15-1:1
15.101	Scope of Subpart	15-1:1
15.102	Negotiated Supply, Service, Experimental, Developmental, and Research Contracts, and Contract Changes With Commercial Organizations	15-1:1
15.103	Contracts With Educational Institutions	15-1:2
15.104	Construction Contracts	15-1:2
15.105	Facilities Contracts	15-1:2A
15.106	Fixed-Price Type Contracts	15-1:2A
15.107	Advance Agreements on Particular Cost Items	15-1:2A
15.108	Grants and Contracts With State and Local Governments	15-1:4
15.109	Definitions	15-1:4
Subpart 2—Contracts With Commercial Organizations		
15.201	Basic Considerations	15-2:1
15.201-1	Composition of Total Cost	15-2:1
15.201-2	Factors Affecting Allowability of Costs	15-2:1
15.201-3	Definition of Reasonableness	15-2:1
15.201-4	Definition of Allocability	15-2:2
15.201-5	Credits	15-2:2
15.201-6	Accounting for Unallowable Costs	15-2:2
15.202	Direct Costs	15-2:2
15.203	Indirect Costs	15-2:3
15.204	Application of Principles and Procedures	15-2:5
15.205	Selected Costs	15-2:6
15.205-1	Advertising Costs	15-2:6
15.205-2	Bad Debts	15-2:7
15.205-3	Bid and Proposal Costs	15-2:7
15.205-4	Bonding Costs	15-2:8
15.205-5	Civil Defense Costs	15-2:8
15.205-6	Compensation for Personal Services	15-2:9
15.205-7	Contingencies	15-2:16
15.205-8	Contributions and Donations	15-2:17
15.205-9	Depreciation	15-2:17
15.205-10	Employee Morale, Health, Welfare and Food Service and Dormitory Costs and Credits	15-2:18C
15.205-11	Entertainment Costs	15-2:20
15.205-12	Cost of Idle Facilities and Idle Capacity	15-2:20
15.205-13	Fines and Penalties	15-2:21
15.205-14	[Reserved]	15-2:21
15.205-15	Fringe Benefits	15-2:21
15.205-16	Insurance and Indemnification	15-2:21
15.205-17	Interest and Other Financial Costs	15-2:23
15.205-18	Labor Relations Costs	15-2:23
15.205-19	Losses on Other Contracts	15-2:23
15.205-20	Maintenance and Repair Costs	15-2:23
15.205-21	Manufacturing and Production Engineering Costs	15-2:24
15.205-22	Material Costs	15-2:24
15.205-23	Organization Costs	15-2:25
15.205-24	Other Business Expenses	15-2:26
15.205-25	Relocation Costs	15-2:26
15.205-26	Patent Costs	15-2:27
15.205-27	Pension Plans	15-2:28
15.205-28	Plant Protection Costs	15-2:28
15.205-29	Plant Reconversion Costs	15-2:28
15.205-30	Precontract Costs	15-2:28
15.205-31	Professional and Consultant Service Costs—Legal, Accounting Engineering, and Other	15-2:29
15.205-32	Gains and Losses on Disposition of Depreciable Property or Other Capital Assets	15-2:30
15.205-33	Recruitment Costs	15-2:31
15.205-34	Rental Costs (Including Sale and Leaseback of Property)	15-2:32
15.205-35	Independent Research and Development Costs	15-2:33
15.205-36	Royalties and Other Costs for Use of Patents	15-2:38
15.205-37	Selling Costs	15-2:38
15.205-38	Service and Warranty Costs	15-2:39
15.205-39	Severance Pay	15-2:39
15.205-40	Special Tooling and Special Test Equipment Costs	15-2:40
15.205-41	Taxes	15-2:40
15.205-42	Termination Costs	15-2:42
15.205-43	Trade, Business, Technical, and Professional Activity Costs	15-2:45

Paragraph	Page
15.205-44 Training and Educational Costs	15-2:45
15.205-45 Transportation Costs	15-2:47
15.205-46 Travel Costs	15-2:47
15.205-47 Economic Planning Costs	15-2:49
15.205-48 Automatic Data Processing Equipment (ADPE) Leasing Costs	15-2:49
15.205-49 [Reserved]	15-2:52
15.205-50 Facilities Capital Cost of Money	15-2:52
15.206 Notice of Intent to Disallow or Not Recognize Costs	15-2:53
Subpart 3—Determining Costs With Educational Institutions	
15.301 Purpose and Scope	15-3:1
15.301-1 Objectives	15-3:1
15.301-2 Policy Guides	15-3:1
15.301-3 Application	15-3:1
15.302 Definition of Terms	15-3:1
15.302-1 Organized Research	15-3:1
15.302-2 Departmental Research	15-3:1
15.302-3 Research Agreement	15-3:1
15.302-4 Other Institutional Activities	15-3:2
15.302-5 Apportionment	15-3:2
15.302-6 Allocation	15-3:2
15.302-7 Stipulated Salary Support	15-3:2
15.303 Basic Considerations	15-3:2
15.303-1 Composition of Total Costs	15-3:2
15.303-2 Factors Affecting Allowability of Costs	15-3:2
15.303-3 Reasonable Costs	15-3:2
15.303-4 Allocable Costs	15-3:2
15.303-5 Applicable Credits	15-3:3
15.303-6 Costs Incurred by State and Local Governments	15-3:3
15.304 Direct Costs	15-3:3
15.304-1 General	15-3:3
15.304-2 Application to Research Agreements	15-3:4
15.305 Indirect Costs	15-3:4
15.305-1 General	15-3:4
15.305-2 Criteria for Distribution	15-3:4
15.305-3 Administration of Limitations on Allowances for Research Costs	15-3:6
15.306 Identification and Assignment of Indirect Costs	15-3:6
15.306-1 General Administration and General Expenses	15-3:6
15.306-2 Research Administration Expenses	15-3:6
15.306-3 Operation and Maintenance Expenses	15-3:7
15.306-4 Library Expenses	15-3:7
15.306-5 Departmental Administration Expenses	15-3:8
15.306-6 Set-Off for Indirect Expenses Otherwise Provided for by the Government	15-3:8
15.307 Determination and Application of Indirect Cost Rate or Rates	15-3:9
15.307-1 Indirect Cost Pools	15-3:9
15.307-2 The Distribution Base	15-3:9
15.307-3 Negotiated Lump Sum for Indirect Costs	15-3:10
15.307-4 Predetermined Fixed Rates for Indirect Costs	15-3:10
15.307-5 Negotiated Fixed Rates and Carryforward Provisions	15-3:10
15.308 Simplified Method for Small Institutions	15-3:11
15.308-1 General	15-3:11
15.308-2 Abbreviated Procedure	15-3:11
15.309 General Standards for Selected Items of Cost	15-3:11
15.309-1 Advertising Costs	15-3:12
15.309-2 Bad Debts	15-3:12
15.309-3 Capital Expenditures	15-3:12
15.309-4 Civil Defense Costs	15-3:12
15.309-5 Commencement and Convocation Costs	15-3:12
15.309-6 Communication Costs	15-3:12
15.309-7 Compensation for Personal Services	15-3:12
15.309-8 Contingency Provisions	15-3:16
15.309-9 Deans of Faculty and Graduate Schools	15-3:16
15.309-10 Depreciation and Use Allowances	15-3:16
15.309-11 Employee Morale, Health, and Welfare Costs and Credits	15-3:17
15.309-12 Entertainment Costs	15-3:17
15.309-13 Equipment and Other Facilities	15-3:17
15.309-14 Fines and Penalties	15-3:18
15.309-15 Insurance and Indemnification	15-3:18
15.309-16 Interest, Fund Raising, and Investment Management Costs	15-3:18
15.309-17 Labor Relations Costs	15-3:18
15.309-18 Losses on Other Research Agreements or Contracts	15-3:19
15.309-19 Maintenance and Repair Costs	15-3:19
15.309-20 Material Costs	15-3:19
15.309-21 Memberships, Subscriptions and Professional Activity Costs	15-3:19
15.309-22 Patent Costs	15-3:19
15.309-23 Pension Plan Costs	15-3:19
15.309-24 Plant Security Costs	15-3:20
15.309-25 Preresearch Agreement Costs	15-3:20
15.309-26 Professional Services Costs	15-3:20
15.309-27 Profits and Losses on Disposition of Plant, Equipment, or Other Capital Assets	15-3:20
15.309-28 Proposal Costs	15-3:20
15.309-29 Public Information Services Costs	15-3:20
15.309-30 Rearrangement and Alteration Costs	15-3:20
15.309-31 Reconversion Costs	15-3:21
15.309-32 Recruiting Costs	15-3:21
15.309-33 Royalties and Other Costs for Use of Patents	15-3:21

SUPPLEMENT NO. 2—FILE MAINTENANCE, CLOSEOUT AND DISPOSITION

S2.101-1 [Amended]

34. In Supplement 2, S2.101-1(b) is amended to change the reference at the end of the last sentence to read "Part 20, Subpart 6." in place of "Part 51, Subpart 3."

S2.102-1 [Amended]

35. In Supplement 2, S2.102-1(xv) is revised as follows:

(xv) all cost and pricing data submitted or used, including Certificates of Current Cost or Pricing Data (see 2.102-1(b), 3.501(b), Sec. C(5), 3.807-3, and 3.807-4) or a copy of the waiver of submission of cost or pricing data;

36. In Supplement 2, S2.102-1(xxviii) is amended to change the reference at the end of the sentence (see 16.901) to read (see 21.100).

37. In Supplement 2, S2.102-1(xxxi), the reference at the end of the sentence is changed to read Part 20, Subpart 6 in place of Part 51, Subpart 3.

38. In Supplement 2, S2.102-2(x) is revised as follows:

(x) progressing, expediting, and production surveillance records (these are to be maintained separately to facilitate their early disposal as prescribed in NHB 1441.1); they include such records as—

* * * * *

S2.201 [Amended]

39. In Supplement 2, S2.201, the last sentence starting with "The contract cross reference/locator * * *" is deleted.

S2.301-1 [Amended]

40. In Supplement 2, S2.301-1 is amended to change the reference "51.603" to read "20.5203".

41. In Supplement 2, 2.301-2 is revised as follows:

S2.301-2 Closed Contracts. A contract accorded limited administration and having a face value of $10.000 or under is closed when evidence of physical completion is received by the contracting officer. All other contracts are closed when they are physically complete and when all administrative actions are taken, including the accomplishment of one of the two Contract Completion Statements, DD Form 1594. However, a completed contract cannot be considered closed while it is in litigation, or an appeal is pending before the NASA Board of Contract Appeals.

42. In Supplement 2, S2.302-1 is revised as follows:

S2.302-1 When the Procurement Office Administers the Contract. When the procurement office administers a contract, that office is responsible for insuring that all required purchase actions and contract administration actions have been completed, utilizing as necessary DD Form 1597, Contract Closeout Checklist, and DD Form 1593, Contract Administration Completion Record. When all required actions have been completed, the procurement office shall prepare DD Form 1594, Contract Completion Statement, for all contracts in excess of $10,000. The Contract Completion Statement shall be made a part of the official contract file. For all contracts not in excess of $10,000, the contracting officer shall include in the contract file a statement that all contract actions have been completed. The completed form or statement is authority for closing out of the contract file. The file shall be closed out as provided in S2.401(ii).

S2.302-2 [Amended]

43. In Supplement 2, S2.302-2(a) is amended to change the reference in the

first sentence from "Part 51, Subpart 3" to "Part 20, Subpart 6."

44. In Supplement 2, S2.401(ii) is revised as follows:

S2.401 Review of Contract Case and Cross Reference/Locator Files.

* * * * *

(ii) *official contract case file*—remove folder for completed contract from the active file series, mark each folder or folder tab "Completed (Date)" and place folder in completed (inactive) contract file series; separate series should be established for contracts of $10,000 or less and for contracts of more than $10,000, to facilitate later disposal; and

* * * * *

[FR Doc. 80-19562 Filed 6-27-80; 8:45 am]
BILLING CODE 7510-01-M

41 CFR Ch. 18, Parts 1, 4, 7, 13, Appendix B and Appendix C

[Procurement Regulation Directive 79-5]

Procurement Regulations; Miscellaneous Amendments

AGENCY: National Aeronautics and Space Administration.

ACTION: Final rule.

SUMMARY: This document amends the NASA Procurement Regulation (41 CFR Ch. 18). It reflects amendments contained in Procurement Regulation Directive 79-5 concerning the following areas:

1. Small Business Concerns
2. Unsolicited Proposals
3. Use of Government Property Clause
4. Revised NASA Form 1018 Reporting Period

EFFECTIVE DATE: June 30, 1980.

FOR FURTHER INFORMATION CONTACT: James H. Wilson, Policy Division (Code HP-1), Office of Procurement, NASA Headquarters, Washington, DC 20546, Telephone: 202-755-2237.

SUPPLEMENTARY INFORMATION: (1) Part 1, 1.7 is revised to bring the NASA PR into closer alignment with the DAR (ASPR).

(2) The text of Part 4.4 is deleted and marked reserved. A new Part 4.9, entitled "Unsolicited Proposals", is implemented by the PRD. This new Part 4.9 brings NASA's policies and procedures applicable to "Unsolicited Proposals" into closer alignment with the DAR. Part 1.304-2(b) is revised to update the definition of "Unsolicited Proposals" to coincide with the new material published in Part 4.9.

(3) Part 13.703 is revised to clarify the instructions as to when the clause in 13.703 is required to be inserted in NASA contracts.

(4) NPR Part 7.104-54 and Appendices B and C are revised to reflect the new NASA Form 1018 annual reporting period which shall be from July 1 of each year to June 30 of the following year. The report shall be submitted by July 31.

A transition reporting period shall be from September 1, 1978 to June 30, 1979. The transition period report is due by July 31, 1979.

(42 U.S.C. 2473 (c)(1))

Leroy E. Hopkins,
Acting Director of Procurement.

PART 1—GENERAL PROVISIONS

1. In Part 1, 1.304-2(b)(1) is revised as follows:

1.304-2 Treatment of Technical Data, Commercial, and Financial Data (Recorded Information) Contained in Proposals.

* * * * *

(b) *Definitions.*

(1) *Unsolicited Proposal.* An unsolicited proposal is a written offer to perform a proposed task or effort, initiated and submitted to the Government by a prospective contractor (offeror) without a solicitation by the Government with the objective of obtaining a contract or other agreement. Advertising material, commercial product offerings, contributions or technical correspondence as defined in 4.904(b) through (e) which are submitted to NASA shall not be considered to constitute unsolicited proposals.

* * * * *

1.701-1 [Amended]

2. In Part 1, 1.701-1(a)(1) the last sentence is amended to read:

"For the purpose of procurement of a product or service that could be classified into two or more industries with different size standards, the size standard to be used in determining a bidder's size status shall be that for the industry whose product or services account for the greatest proportion of the contract price."

3. In Part 1, 1.703 the introductory text of paragraph (b) is revised as follows:

1.703 Determination of Status as Small Business Concern.

* * * * *

(b) *Representation by a Bidder or Offeror.* Representation by a bidder or offeror that it is a small business concern shall be effective, even though questioned in accordance with the terms of this subparagraph (b), unless the SBA, in response to such question and pursuant to the procedures in (3) below, determines that the bidder or offeror in question is not a small business concern. If a procurement calls for more than one item and the solicitation permits bids on any item, all items, or all or none, the offeror must meet the small business size standard for each item it is awarded. If the procurement calls for more than one item and the solicitation requires bids on an all or none basis, the offeror can qualify as small business for such procurement if it meets the size standard for the item accounting for the greatest percentage of the total contract value. The controlling point in time for a determination concerning the size status of a questioned bidder or offeror shall be the date of bid opening, or the date for initial proposals in negotiated procurements, as well as the date of award. A representation by a bidder or offeror that it is a small business concern will not be accepted by the contracting officer if it is known that (i) such concern has previously been finally determined by SBA to be ineligible as a small business for the item or service being procured, and (ii) such concern has not subsequently been certified by SBA as being a small business. If SBA has determined that a concern is ineligible as a small business for the purpose of a particular procurement, it cannot thereafter become eligible for the purpose of such procurement by taking affirmative action to constitute itself as small business. * * *

* * * * *

4. In Part 1, 1.704-3(vii) is revised as follows:

1.704-3 Small Business Specialists.

* * * * *

(vii) He shall participate in determinations concerning responsibility of a prospective contractor (see 1.904), whenever small business concerns are involved.

* * * * *

5. In Part 1, 1.705-4 is revised as follows:

1.705-4 Certificates of Competency.

(a) SBA has statutory authority to certify the competency of any small business concern as to all elements of reponsibility including but not limited to, capability, competency, capacity, credit, integrity, perseverance, and tenacity except regulatory requirements under the jurisdiction of other Federal agencies. Contracting officers shall accept SBA certificates of competency as conclusive of a prospective contractor's responsibility (see 1.903-1, 1.903-2 and 1.903-3), unless the contracting officer has substantial doubt as to the concern's ability to perform, in which case the procedures in (f) and (g) apply.

(b) In procurement where the highest competence obtainable or the best scientific approach is needed, as in certain negotiated procurement of

research and development, highly complex equipment, or professional services, the certificate of competency procedure is not applicable to the selection of the source offering the highest competence obtainable or best scientific approach. However, if a small business concern has been selected on the basis of the highest competence obtainable or best scientific approach and, prior to award, the contracting officer determines that the concern is not responsible, the certificate of competency procedure is applicable.

(c) If a bid or proposal of a small business concern is to be rejected because the contracting officer has determined the concern to be nonresponsible, the matter shall be referred to the appropriate SBA field office having the authority to process the referral in the geographical area involved. If required, guidance as to the location of the appropriate SBA field office may be obtained from an SBA representative assigned to the procurement office or the nearest SBA field office. This procedure applies only to proposed awards exceeding $10,000. A pre-award survey (see 1.905) shall be made prior to a determination by a contracting officer that a small business concern is not responsible on a proposed award of more than $10,000. Concurrent referrals of two or more bids or proposals, rejected because of non-responsibility for a proposed award, shall not be made to SBA by the contracting officer. Final processing of a case, including possible issuance of certificate of competency, must be completed by SBA on each referral before the contracting officer may proceed with an additional referral on the proposed award to SBA. If a partial set-aside is involved and the bid of a small business concern on the unreserved portion is to be rejected for non-responsibility and the same small business concern is entitled to consideration on the reserved portion of the set-aside if a certificate of competency is issued by the SBA, the entire quantity of the procurement (reserved and unreserved) for which that small business concern may be entitled, if competent, shall be referred to SBA and the referral papers so noted. The SBA may then certify the small business concern for the maximum quantity of the procurement for which it has been determined responsible. The award shall be withheld until SBA action concerning issuance of a certificate of competency, or until 15 working days after the SBA is so notified, whichever is earlier, subject to the following:

(i) Under no circumstances will a referral be made to the SBA prior to a determination by the contracting officer that the offer of the small business concern is responsive. Except for procurements resulting in construction or service contracts, an offer of an otherwise eligible nonmanufacturer shall not be referred to the SBA for certificate of competency action if the offeror agrees that he does not meet the definition of small business for preferential treatment purposes as prescribed in 1.701–1(a)(2)c. Disagreements will be resolved in accordance with 1.703(b).

(ii) The activity performing the pre-award survey shall furnish the survey to the contracting officer. If the contracting officer determines in accordance with 1.904, that the small business concern is not responsible, he will refer the matter directly to the SBA, or he may notify the pre-award survey activity to refer the matter to the SBA, whichever is the more expeditious (e.g., where the surveying activity is substantially closer to the cognizant SBA office than the procurement office, it may be more expeditious to have the surveying activity refer the matter to the Small Business Administration). A copy of the communication referring the matter to SBA shall be forwarded to the Director of Procurement, NASA Headquarters.

(iii)(A) Upon making a determination to refer the matter to the SBA, the contracting officer shall furnish to the SBA, or to the surveying activity, whichever is consistent with the action taken under (ii) above the data prescribed in (d) below. The procurement office that refers the matter to the SBA shall maintain close liaison with the SBA to assure compliance with (e) below. If the procurement office does not hear from the cognizant SBA field office within five working days after the matter has been referred, the procurement office will contact the SBA office to which the matter was referred to determine whether a certificate of competency is being processed. When, in accordance with (ii) above, the contracting officer has requested the pre-award survey activity to refer the matter to SBA, that activity shall keep the contracting officer advised of significant developments, including the results of any inquiry to the SBA at the end of the five working day period, and any new or additional facts, learned from the SBA, that warrant reversal of the pre-award survey activity's negative finding.

(B) The NASA Director, Small and Minority Business Office identified in 1.704–2 shall be informed by the procuring activity small business specialist, in writing, on a quarterly basis, of all certificate of competency cases initiated during a particular quarter and of the final disposition made on cases during the quarter, including the number and dollar value of certificates of competency issued during the period. The information shall include company name, item being procured, solicitation number, dollar value of the procurement, and the date the case was submitted to SBA. In addition, advice and data will furnished for all cases where (a) the small business concern elects not to file an application for a certificate of competency, or (b) SBA declines to issue a certificate of competency, or (c) the purchasing activity reverses the pre-award survey activity's negative finding concerning responsibility, withdraws the request for the certificate of competency, and makes the award. This reporting requirement shall be included in the Summary of Significant Matters related to the Small Business Program Reports Control No. 10000000029.

(iv) A referral need not be made to the SBA if the contracting officer, with the approval of the Procurement Officer, certifies in writing that the award must be made without delay, includes such certification and supporting documentation in the contract file, and promptly furnishes a copy to the SBA. Contracting officers shall, immediately upon receipt of sufficient information, make a determination concerning the responsibility of the low responsive prospective small business contractor. If a contracting officer makes a determination of nonresponsibility, he shall promptly refer to SBA for certificate of competency consideration unless he executes a documented certificate of urgency indicating the specific reasons why an award must be made without the delay incident to referral to SBA. Referral of a case to SBA or execution of a certificate of urgency shall not be deferred pending investigation and determination of the responsibility of other offerors.

(v) A referral need not be made to the SBA if a contracting officer determines a small business concern nonresponsible pursuant to 1.903–1(v) and such determination is approved by the head of the installation or his designee.

(vi) A referral need not be made to the SBA if a small business concern has been suspended or debarred pursuant to E.O. 11246 or 1.600 of this Regulation.

(vii) A determination by a contracting officer that a small business concern is not responsible, must be supported by substantial evidence documented in the contract files.

(d) It is the policy of NASA to endeavor to reach agreement with the SBA regarding the responsibility of a small business concern. To assist the SBA and to assure that it has the benefit of the views of NASA, the SBA shall be furnished three copies of the solicitation, one copy of the pertinent drawings and specifications, the pre-award survey findings, pertinent technical and financial information, and, if available, the abstract of bids, and other pertinent information which supported the contracting officer's determination of nonresponsibility.

(e) SBA field offices will notify the contracting officer of each case where they (i) plan to issue a certificate of competency, or (ii) are submitting a case to SBA, Washington, D.C., for approval prior to issuance of a certificate of competency, and to provide the contracting officer or his designated representative with a brief written statement citing the reasons for SBA's proposed affirmative action. Prior to final SBA action, the contracting officer will be afforded an opportunity to meet or communicate with SBA field office representatives and furnish to them new or additional information on the case. Copies of significant data developed by SBA that are pertinent to the case will be made available, upon request, to the contracting officer, or his representative, at such meeting or through correspondence. SBA case files may be examined at the meeting and pertinent notes taken by the contracting officer or his representative, but such files will not be released outside of SBA. Personnel from a procurement office, who participated in a pre-award survey of the prospective contractor shall be prepared to discuss with the SBA the basis for the pre-award findings. Every effort should be made to resolve any differences between the SBA and NASA through a complete exchange of pre-award information developed by each agency.

(f) One of the following courses of action shall be taken subsequent to discussions or a meeting between representatives of the contracting officer and SBA field offices:

(i) if the new and additional facts presented by the SBA field office representatives so warrant, the negative determination as to responsibility of the apparent low bidder or offeror shall be reversed, the referral to SBA shall be withdrawn, and the contract award shall be made without the necesssity for issuance of a certificate of competency by SBA. The contracting officer shall promptly inform the SBA field office of his intention to take such action and the anticipated date of contract award.

(ii) if agreement cannot be reached between the SBA field office and the contracting officer and substantial doubt still exists as to the ability of the contractor to perform, the contracting officer shall request the SBA field office to suspend action and to forward the case to SBA, Washington, D.C. for review. The contracting officer shall then forward through channels on an expedited basis a complete case file to the Director of Procurement with a request that the case be considered for appeal to SBA Headquarters. This file will include the data specified in (d) above. SBA's rationale for proposing affirmative certificate of competency action, and the contracting officer's comments thereon. Procurement action shall be suspended until the contracting officer is informed by the Director of Procurement of the final decision in the case. If the Director of Procurement concludes that the request for certificate of competency action should be withdrawn and a contract awarded without benefit of a certificate of competency, the contracting officer will be so informed and provided written instructions on how to proceed with the procurement. If the Director of Procurement agrees with the recommended appeal action of the contracting officer, he will request the SBA Associate Administrator for Procurement Assistance, Washington, D.C., to review the proposed affirmative certificate of competency action of the SBA field office. If SBA, Washington, D.C., does not concur with the proposed affirmative certificate of competency action of its field office, it shall so inform the Director of Procurement. If SBA, Washington, D.C., concurs with the affirmative certificate of competency action proposed by the SBA field office it shall so inform the Director of Procurement, giving reasons for its position. Within 10 working days after receipt of such notice, or such longer time as may be agreed upon, the Director of Procurement will inform the SBA Headquarters whether or not a formal appeal will be made. Such appeal will be presented to SBA Headquarters within 10 working days after the SBA has been informed that an appeal will be made, or at such longer time as may be agreed upon. The 15 day period referred to in (c) shall be automatically suspended when the contracting officer requests SBA to suspend action and to forward the request to SBA Headquarters for review in accordance with this paragraph. Following an appeal, the determination made by the SBA Associate Administrator relative to certificate of competency action shall be considered final and not subject to further appeal by NASA.

(iii) if agreement cannot be reached between the contracting officer and the SBA field office, the contracting officer may conclude it would not be practicable to appeal the case to the Washington SBA level nor would it be appropriate to withdraw his request for certificate of competency action. In that case, the contracting officer shall inform the SBA field office that it must issue a certificate of competency as a prerequisite to contract award. However, such action shall not be taken by the contracting officer without prior approval from the Procurement Officer.

(g) If an SBA field office fails to give a contracting officer the opportunity to refer a proposed affirmative certificate of competency action to the Assistant Administrator of Procurement for review and possible appeal, appeal action described in (f) above may be taken by the contracting officer subsequent to the issue of a certificate of competency if he has substantial doubt as to the ability of the contractor to perform.

(h) When the contracting officer has questioned only one of the general standards of responsibility of a small business offeror, but the SBA has declined to issue a certificate of competency, due to its findings concerning the offeror's capability to perform under a different standard of responsibility, the responsible SBA office will inform the contracting officer of the basis for its decision. The information furnished by SBA to the contracting officer will generally consist of a copy of the letter sent to the offeror in question explaining why SBA declines to issue a certificate of competency. This information will be considered by the contracting officer in making an award of the procurement.

1.705–5 [Amended]

6. In Part 1, 1.705–5 is amended to change the phrase "Assistant Administrator for Procurement" to read "Director of Procurement" wherever it appears.

7. In Part 1, 1.705–5 (c)(1)(D) and (H) are revised as follows:

1.705–5 Contracting with the Small Business Administration.

* * * * *

(c) * * *

(1) * * *

(D) It will be the responsibility of the SBA to provide written certification, as to its competency to perform the contract, to the NASA contracting officer. Such certification may be in the form of a provision in the SBA contract

with the NASA procurement office, substantially as follows:

* * * * *

(H) For follow-on year procurements in support of the SBA requested commitment, the SBA will initiate individual requests to NASA for each ensuing proposed Section 8(a) contract. This process will permit NASA, prior to actual negotiations of follow-on Section 8(a) awards, to verify the availability of requirements, funding and other pertinent factors. It will be the responsibility of the SBA to provide certification to the cognizant NASA contracting officer, for each Section 8(a) contract in accordance with 1.705(c)(1)(D).

* * * * *

8. In Part 1, 1.706–1 is revised to read as follows:

1.706–1 General.

(a) Small business and labor surplus area (LSA) set-asides should be considered in the following order of precedence:

(i) Total combined small business/LSA set-aside

(ii) Total small business set-aside

(iii) Partial small business set-aside

(iv) Total labor surplus area set-aside

(b) Subject to the order of precedence established in (a) above any individual procurement or class of procurements regardless of dollar value or any appropriate part thereof, shall be set-aside for the exclusive participation of small business concerns when such action is determined to be in the interest of maintaining or mobilizing the Nation's full productive capacity, or assuring that a fair proportion of Government procurement is placed with small business concerns. The determination to make a set-aside may be unilateral or joint. A unilateral determination is one which is made by the contracting officer normally upon initiation by the small business specialist. If a small business specialist is not assigned or is otherwise not available, the set-aside may be initiated by the contracting officer. A joint determination is one which is made jointly by an SBA representative and the contracting officer. Insofar as practicable, unilateral determinations rather than joint determinations shall be used as the basis for set-asides. SBA recommendations for set-asides will be limited to those proposed procurements over $2,500 which, after review by the small business specialist or the contracting officer, have been determined by either party not to meet the criteria for total or partial restriction to small business concerns. If a proposed small business set-aside is estimated to exceed $1,000,000 in value and a bond is required, the contracting officer shall, to the extent practicable, place contracts so as to allow more than one concern to perform such work.

(c) To provide for SBA consideration of individual set-asides, at the request of its representative, the procurement office shall make available to him for review at such office (to the extent that he has been granted security clearance) all proposed classified and unclassified procurements expected to exceed $2,500 on which unilateral set-asides have not been made by the contracting officer.

(d) In addition to individual procurement set-asides, classes of current and future procurements, or portions thereof, of selected items or services, or groups of like items or services may be set aside for exclusive small business participation. The determination to make a class set-aside may be either unilateral or joint. Unilateral set-asides will normally be initiated by recommendation of the small business specialist, but may also be initiated by the contracting officer. Joint class set-asides may be recommended by the SBA representative for only those items or services on which unilateral class set-asides have not previously been made by the contracting officer. The determination to make a class set-aside shall not depend on the existence of a current procurement if future procurements can be clearly foreseen. Class set-asides shall apply only to the procurement office making or participating in the agreement, and such set-asides, which are established for projected procurements over $2,500, shall be equally applicable to purchases under $2,500, to be effected by small purchase procedures, unless it is not practicable to effect a small purchase from a small business firm in a timely manner to meet an immediate requirement. A class set-aside agreement should specifically identify the items or services subject thereto. Any class of procurements proposed to be totally set aside shall satisfy the requirements of 1.706–5. The set-aside determination for any class of procurements proposed to be partially set aside shall specify that it does not apply to any individual procurement not severable into two or more economic production runs or reasonable lots. Records of individual procurements under each class set-aside shall be maintained by individual procurement offices and shall include the solicitation number and date, item or service, unilateral or joint class set-asides, estimated dollar amount of the procurement, and estimated dollar amount of the set-aside. A copy of each such record shall be made available by each procurement office to the small business specialist or to the SBA upon request.

(e) None of the following is, in itself, sufficient cause for not making a set-aside:

(i) a large percentage of previous procurements of the item has been placed with small business concerns;

(ii) a period of less than 30 days from date of issuance of solicitations is prescribed for the submission of offers;

(iii) the procurement is classified;

(iv) small business concerns are considered to be receiving a fair proportion of total contracts for supplies or services;

(v) a class set-aside of the item or service concerned has been made at some other procurement office; or

(vi) the item will be described by "brand name or equal."

9. In Part 1, 1.706–3(e), (g), (h) and (i) are revised to read as follows:

1.706–3 Review, Withdrawal, or Modification of Set-Asides or Set-Aside Proposals.

* * * * *

(e) If the contracting officer disagrees with the recommendation of the SBA representative regarding a small business set-aside for an individual procurement or class of procurements or portion thereof and so notifies the SBA representative in writing, or if the SBA representative disagrees with the contracting officer regarding a withdrawal or modification of a joint or unilateral set-aside determination, the SBA representative shall be allowed two working days to appeal in writing to the head of the installation or his designee for decision. Within one working day after receipt of a decision from the head of the installation or his designee approving the action of the contracting officer, the SBA representative may request the contracting officer, in writing, to suspend procurement action pending a further appeal by the Administrator of the SBA to the Administrator of NASA. The SBA shall be allowed 15 working days after making such written request within which (i) the Administrator of SBA may appeal to the Administrator of NASA, and (ii) notify the contracting officer whether the further appeal has in fact been taken. If notification is not received by the contracting officer within the 15 day period, it shall be deemed that the SBA request to suspend procurement action has been withdrawn and that an appeal to the Administrator of NASA was not taken. When an

appeal to the Administrator of NASA has been taken and the contracting officer has been notified of that fact within the 15 day period, the head of the installation shall forward the matter to the Administrator of NASA, through the Office of Procurement, NASA Headquarters, with full justification for his decision.

* * * * *

(g) The Administrator of NASA will have 30 working days to either sustain or deny the appeal for set-aside action. Should it be determined that a decision cannot be made within this time, a later date will be established in writing by the Administrator of NASA to the Administrator, SBA, citing the reasons why additional time is required.

(h) In those cases where an SBA representative is not assigned or available, and the contracting officer disagrees with the recommendation of the small business specialist regarding a small business set-aside for an individual procurement or class of procurements or a portion thereof and so notifies the small business specialist in writing, or if the small business specialist disagrees with the contracting officer regarding a withdrawal or modification of a set-aside determination, the small business specialist may appeal in writing to the Procurement Officer for decision. A memorandum of the decision by the Procurement Officer shall be placed in the contract file. After receipt of a decision from the Procurement Officer, which shall be final, and if the decision approves the action of the contracting officer, the small business specialist shall forward for information and management purposes complete documentation of the case to the Director of Procurement. (Attn: Director, Small and Minority Business Office). Documentation of the case transmitted to the Director of Procurement shall include, as a minimum, a copy of the IFB or RFP, a list of those solicited, indicating if the invitee is small or large business by SBA definition, copies of the reasons, in writing, for or against set-aside or withdrawal or modification of a set-aside submitted by the small business specialist and the contracting officer, a copy of the Procurement Officer's decision and a complete abstract of all bids or proposals received indicating the successful bidder together with any other material considered by the Procurement Officer in arriving at his decision. The small business specialist's transmittal letter or memorandum will contain an affirmative statement that the enclosures constitute the complete file reviewed and considered by the Procurement Officer in making his decision.

(i) A signed memorandum of nonconcurrence in a recommended set-aside action or of any withdrawal or modification shall be made and retained in the contract file.

PART 4—SPECIAL TYPES AND METHODS OF PROCUREMENT

10. In Part 4, the Table of Contents is revised to delete and reserve Subpart 4. A new Subpart 9, Unsolicited Proposals, Table of Contents, is added as follows:

Subpart 4—[Reserved]

Table of Contents

Subpart 9—Unsolicited Proposals

Paragraph and page

4.900 Scope of Subpart, 4–9:1
4.901 General, 4–9:1
4.902 Policy, 4–9:1
4.903 Agency Program Direction and Operation, 4–9:1
4.904 Definitions, 4–9:1
4.905 Advance Guidance, 4–9:2
4.906 Content of Unsolicited Proposals, 4–9:3
4.907 Time of Submission, 4–9:4
4.908 NASA Points of Contact, 4–9:4
4.909 Receipt, Review, and Evaluation, 4–9:5
4.910 Method of Procurement, 4–9:7
4.911 Prohibitions, 4–9:7
4.912 Interagency Coordination, 4–9:7
4.913 Limited Use of Data, 4–9:8
4.914 Foreign Proposals, 4–9:8
4.915 University Proposals, 4–9:8

11. In Part 4, a new Subpart 9, Unsolicited Proposals, is added as follows:

Subpart 9—Unsolicited Proposals

4.900 Scope of Subpart. This Subpart sets forth policies and procedures concerning the receipt, evaluation, and acceptance of unsolicited proposals.

4.901 General. The unsolicited proposal is a valuable means by which unique or innovative methods or approaches which have originated or developed outside the Government can be made available to Government agencies for use in the accomplishment of their missions. It is offered in the hope that the Government will enter into a contract or other agreement with the offeror for (i) research on or development of, the methods, approaches, or ideas it contains, or (ii) the conduct of the activity or services or the delivery of the items it proposes. It should not be merely an advance proposal for a specific agency requirement which would normally be procured by competitive methods. An unsolicited proposal should be prepared independent of Government supervision. It often represents a substantial investment of time and effort by the offeror. It should present the proposed work in sufficient detail to allow a determination that Government support could be worthwhile and that the proposed work could enhance, benefit, and/or provide valuable input to an agency's research and development mission or to some other area of agency responsibility.

4.902 Policy. It is the policy of the Government to foster and encourage the submission of unsolicited proposals.

4.903 Agency Program Direction and Operation. NASA will foster and encourage the submission of unsolicited proposals relevant to Agency mission requirements by:

(a) Informing organizations and individuals of the scientific and technological areas encompassed by NASA's mission:

(b) Issuing notices to the scientific and technological communities which are informative of on-going programs and areas of activity:

(c) making no other use of proposals than for evaluation or review purposes unless otherwise specified by law;

(d) developing appropriate policies and procedures, consistent with this subpart 9, which not only encourage unsolicited proposal submission, but which avoid to the extent possible those factors which tend to discourage the generation and acceptance of innovative ideas by the unsolicited proposal mechanism;

(e) ensuring the availability of information for the preparation and submission of unsolicited proposals to NASA;

(f) maintaining uniform proposal submission requirements throughout NASA which place the least possible burden on the offeror; and

(g) acknowledging proposals, making suitable evaluations, and notifying the offeror of NASA's decisions in a timely fashion.

4.904 Definitions. As used in this Subpart 9, the following terms have the meanings stated.

(a) *"Unsolicited proposal"* means a written offer to perform a proposed task or effort, initiated and submitted to the Government by a prospective contractor (offeror) without a solicitation by the Government with the objective of obtaining a contract or other agreement. Advertising material, commercial product offerings, contributions, or technical correspondence as defined in paragraphs (b) through (e) below which are submitted to an agency shall not be considered to constitute unsolicited

proposals within the intent of this Subpart 9.

(b) *"Advertising material"* means material designed to acquaint the Government with a prospective contractor's present off-the-shelf products or potential capabilities, or designed to determine the Government's interest in buying such products.

(c) *"Commercial product offering"* means offers of standard commercial products usually sold in substantial quantities to the general public and which the vendor wishes to see introduced in the Government's supply system as an alternate or replacement for an existing supply item.

(d) *"Contribution"* means concepts, suggestions, or merely ideas presented to the Government for its use, with no indication on the part of the offeror that he will devote any further effort in relation to such concepts, suggestions, or ideas on behalf of the Government.

(e) *"Technical correspondence"* includes written inquiries regarding Government interest in research areas, preproposal explorations, technical inquiries, and research descriptions.

4.905 Advance Guidance. Organizations or individuals who are interested in submitting an unsolicited proposal should be encouraged, before expending extensive effort in preparing a detailed unsolicited proposal or submitting any proprietary information to the Government, to make preliminary inquiries as to the general need for the type of effort contemplated.

(a) Prior contact with agency technical personnel is permissible and should be encouraged with the limited objectives of conveying to the prospective offeror an understanding of the agency mission and needs relative to the type of effort contemplated.

(b) NASA shall make free written information available to potential offerors regarding policies and procedures for unsolicited proposals. As a minimum, the following information shall be made available to potential offerors:

(i) definition of an unsolicited proposal, consistent with that set forth in 4.904;

(ii) characteristics of a suitable proposal acceptable for formal evaluation (also see 4.906 and 4.910);

(iii) requirements concerning responsible prospective contractors (see 1.900), organizational conflicts of interest, and where applicable, cost sharing (see 1.362);

(iv) the role of technical correspondence prior to proposal preparation;

(v) agency points of contact for information regarding advertising, contributions, bidders mailing lists, and other types of transactions frequently misconstrued as unsolicited proposals;

(vi) information regarding solicited proposal submission procedures;

(vii) information regarding evaluation procedures of NASA;

(viii) sources of information on NASA objectives and areas of potential interest suitable for unsolicited proposal submissions;

(ix) information regarding NASA's policy for treating technical, commercial, and financial data contained in unsolicited proposals and the notice to be used by an offeror to protect any trade secrets contained in a proposal (see 1.304–2); and

(x) advice to the prospective offeror that an unsolicited proposal shall conform to NASA's procedural and submission guidelines.

(c) Personal contacts shall be conducted in a manner that will preclude agency commitments regarding acceptance of unsolicited proposals.

4.906 Content of Unsolicited Proposals. Unsolicited proposals should contain the following information in order to permit consideration in an objective and timely manner.

(a) *Basic Information.* This includes:

(i) the name and address of the offeror (if an organization, indicate type, *e.g.*, profit, nonprofit, educational, small business);

(ii) names and telephone numbers of the offeror's technical and business personnel who may be contacted by the agency for evaluation or negotiation purposes;

(iii) application of the notice of 1.304–2(d)(2) to any information in the proposal which the offeror desires to protect as a trade secret;

(iv) names of any other Federal, State, local agencies, or other parties receiving the proposal and/or funding the proposed effort or activity;

(v) date of submission; and

(vi) signature of a responsible official or authorized representative of the organization or a person authorized to contractually obligate the organization.

(b) *Technical Information.* This includes:

(i) a concise title and an abstract (approximately 200 words) of the proposed effort;

(ii) a reasonably complete discussion stating the objectives of the effort or activity, the method or approach and extent of effort to be employed, the nature and extent of the anticipated results, and the manner in which the work will help to support accomplishment of NASA's mission;

(iii) the name and brief biographical information of the offeror's key personnel (including alternates, if desired) who would be involved; and

(iv) the type of support, if any, the offeror requests of the agency, *e.g.*, facilities, equipment, materials, or personnel resources.

(c) *Supporting Information.* This includes:

(i) a proposed price or total estimated cost;

(ii) a cost estimate for the proposed effort sufficiently detailed by element of cost for meaningful evaluation;

(iii) the type of contract preferred;

(iv) period of time for which the proposal is valid (a minimum of six months is suggested);

(v) proposed duration of effort;

(vi) statements, if applicable, regarding cost sharing organizational conflicts of interest, security clearance status, and environmental impacts and brief descriptions of the organization, previous work or experience in the field of the proposal, and facilities to be utilized for the work, where appropriate for understanding the proposal; and

(vii) The identifying number of the basic contract or other agreement (if applicable).

(d) *Renewal Information.* Proposals for renewal of on-going projects are generally simpler to prepare. However, they should cover parts (a)–(c) above, particularly as dictated by changes since the original award was made. Prior contact with the NASA technical officer is advisable to determine the optimum amount of technical information to include.

4.907 Time of Submission. Unsolicited proposals should be submitted well in advance of the offeror's desired beginning of the proposed effort or activity in order to allow the agency sufficient time to evaluate the proposal and negotiate any resultant contract, or other agreement, and in ample copies to allow simultaneous study by all reviewers. A minimum of 5 copies and of four months advance submission are suggested.

4.908 NASA Points of Contact.

(a) *Coordinating Offices.* Each NASA field installation will designate an organizational entity as its unsolicited proposal control unit for coordinating the handling of unsolicited proposals in accordance with policies and procedures herein (see 4.909). Headquarters program offices are designated as coordinating offices for proposals sent directly to them in relation to disseminated information on continuing activities described in (b)(i) below.

(b) *Proposal Submission.*

(i) Headquarters officers broadly disseminating information within the

scientific and technological communities regarding continuing responsibilities and areas of activity should indicate in the communications that unsolicited proposals relating to such continuing responsibilities and areas of activities should be submitted directly to the originating office, unless submission to a specific field installation is indicated. Responses to any such field installation announcements shall be addressed to the unsolicited proposal control unit at that installation.

(ii) Except as provided in (i), unsolicited proposals believed to be of interest to only one NASA field installation should be submitted to that installation marked for attention of the unsolicited proposal unit.

(iii) Except as provided in (i), unsolicited proposals believed to be of interest to NASA Headquarters are to be submitted to NASA Headquarters, University Affairs Office, Code LU-16. Unsolicited Proposal Control Unit, Washington, DC 20546.

(iv) Except as provided in (i), proposals from colleges and universities which are believed to be of interest to more than one installation should be submitted to NASA Headquarters, University Affairs Office, Code LU-16. Unsolicited Proposal Control Unit, Washington, DC 20546, whereas such proposals from non-educational and other non-profit organizations should be submitted to each installation believed to have an interest, to the attention of the unsolicited proposal control unit.

(c) *Proposal Preparation Information.* Information on the preparation of unsolicited proposals may be obtained from field installation procurement offices or NASA Headquarters. Only inquiries from academic researchers should be sent to the Headquarters University Affairs Office. All other inquiries to NASA Headquarters should be addressed to Headquarters Contracts and Grants Division, Code HW-2, Washington, DC 20546.

(d) *Other Inquiries (See 4.904).*

(i) Advertising material and commercial product offerings may be forwarded to any NASA office or individual.

(ii) Contributions should be sent to Director of the Staff, Inventions and Contributions Board, National Aeronautics and Space Administration, Washington, DC 20546.

(iii) *Technical Correspondence.* NASA does not have an "Informal" or "preliminary" proposal category. Hence, any inquiries or exploratory discussions prior to submission of a complete unsolicited proposal is left as a matter strictly between the interested individuals or organization and the appropriate NASA office or employee. General guidance on whom to contact is available from the procurement office at each field installation and NASA Headquarters.

4.909 Receipt, Review, and Evaluation. Each NASA field installation shall adopt procedures that provide for the coordination, control, receipt, and evaluation of proposals in accordance with agency-wide policies and procedures. Because of the sensitivity of the evaluation process, evaluations should be conducted in a manner that will ensure thorough and equitable reviews which are in the best interests of NASA and the offeror.

(a) Unsolicited proposals shall be acknowledged as soon as possible by the office which has been assigned the coordination responsibility (see 4.908), and processed in an expeditious manner.

(b) Prior to making a comprehensive evaluation of an unsolicited proposal, the coordinating office (see 4.908) shall determine that the document: (i) contains sufficient technical and cost information to permit a meaningful evaluation; and (ii) has been approved by a responsible official or authorized representative of the organization submitting the proposal, or a person authorized to contractually obligate the organization.

(c) If the document does not meet the requirements in paragraph (b) above, the offeror shall be given the opportunity to provide the required data. A comprehensive evaluation of an unsolicited proposal need not be made if the proposal is not within the purview of NASA's mission (also see 4.912(a)). In such cases, the submitter shall be furnished a prompt reply, stating how the document is being interpreted by NASA, the reason(s) for not evaluating it, and the disposition or intended disposition of the matter submitted. NASA shall not deny reconsideration of a timely and appropriately revised submission which is responsive to such an initial determination.

(d) Comprehensive evaluations shall be coordinated by the organizational entity designated in accordance with 4.908. Each unsolicited proposal that is circulated for a comprehensive evaluation within the agency shall have attached the NASA cover sheet prescribed in 1.304-2(d)(4)(B). The policy and procedures set forth in 1.304-2(d)(5) must be followed in the event it is necessary to disclose an unsolicited proposal outside the Government in order to obtain a NASA evaluation. In evaluating an unsolicited proposal, agency personnel shall consider in addition to any other criteria, the following:

(i) unique, innovative, or meritorious methods, approaches, or ideas which have originated with or assembled together by the offeror that are contained in the proposed effort or activity;

(ii) overall scientific, technical, or socio-economic merits of the proposed effort or activity;

(iii) potential contribution which the proposed effort is expected to make to the agency's specific mission, if pursued at this time;

(iv) capabilities, related experience, facilities, or techniques, or unique combinations thereof which the offeror possesses and offers, and which are considered to be integral factors for achieving, the scientific, technical, or socio-economic objective(s) of the proposal; and

(v) qualifications, capabilities, and experience of the proposed principal investigator, team leader, or key personnel who are considered to be critical in achieving the objectives of the proposal.

(e) Upon completion of the comprehensive evaluation of an unsolicited proposal, evaluators shall, in accordance with NASA procedures, notify the coordinating office (see 4.908) of their conclusions together with recommendations for further action. The manner and extent of the evaluation of the scientific/technical and price/cost portions of unsolicited proposal is the responsibility of offices having substantive responsibilities for those areas.

4.910 Method of Procurement.

(a) A favorable comprehensive evaluation of an unsolicited proposal is not in itself, sufficient justification for negotiating on a noncompetitive basis with the offeror. When a document qualifies as an unsolicited proposal (see 4.904(a) and 4.909(b)) but the substance (i) is available to the Government without restriction from another source, or (ii) closely resembles that of a pending competitive solicitation, or (iii) is otherwise not sufficiently unique to justify acceptance (see 4.909(b)), the unsolicited proposal shall not be acceptable. When procurement is intended and competition is feasible, the proposal shall be returned to the offeror together with the reasons for the return (see 4.909(e)).

(b) A negotiated, noncompetitive procurement is permissible when an unsolicited proposal has received a favorable technical evaluation, unless it is determined that the substance thereof is available to the Government without restriction from another source, or a

competitive procurement is otherwise appropriate. The technical office sponsoring the procurement shall support its recommendation with a justification for acceptance of unsolicited proposal. The justification shall be based on a comprehensive evaluation of the proposal. The justification shall include the facts and circumstances that operate to preclude competition and that support the recommended noncompetitive action. Consideration shall include the evaluation factors listed in 4.909 (d)(i-v).

(c) When it is determined that the subject matter of an unsolicited proposal is acceptable for award on a noncompetitive basis, the unsolicited proposal will serve as the basis for negotiation.

4.911 Prohibitions. NASA shall not permit all or any part of an unsolicited proposal to be used as the basis, or portion of, a solicitation, or in negotiation with other organizations unless the offeror is notified of and agrees to the intended use. However, nothing herein precludes the Government from using any data, concept or idea which it could have used had the unsolicited proposal not been submitted. With respect to data (see 4.913(a)) tendered in an unsolicited proposal, disclosure of information which concerns or relates to trade secrets, processes, operations, style of work, or apparatus, and other matters may result in the imposition of a criminal penalty pursuant to the provisions of 18 U.S.C. 1905.

4.912 Intragency Coordination. When it is determined that a meritorious unsolicited proposal is not related to the mission of NASA or may be of interest to agencies in addition to NASA, NASA may identify for the offeror other agencies whose missions bear a relationship to the subject matter of the unsolicited proposal; however, NASA should not transfer responsibility for evaluation to another agency without the express consent of the offeror.

(a) NASA will not accept for formal evaluation unsolicited proposals initially submitted to another agency, or JPL, without the express consent of the offeror.

(b) Proposals submitted to NASA may not be transferred to JPL for procurement without the offeror's permission.

4.913 Limited Use of Data.

(a) As provided in 1.304-2, it is NASA policy to use information contained in an unsolicited proposal for evaluation purposes only. Should any of such information comprise a trade secret of the offeror, or his proposed subcontractor, and it is desired to maintain trade secret rights in the information, the notice of 1.304-2(d)(2) must be affixed to the cover sheet of the proposal when submitted specifying therein the pages of the proposal which contain the trade secret. Thereafter, it is NASA policy to protect such noticed information (data) as a trade secret. The notice in 1.304-2(d)(2) is as follows:

Notice

Data on pages——of this proposal constitute a trade secret. It is furnished to the Government in confidence with the understanding that it will not, without permission of the offeror, be used or disclosed other than for evaluation purposes; provided however, in the event a contract is awarded on this proposal the Government may obtain in the contract additional rights to use and disclose this data.

(b) If the contracting officer receives an unsolicited proposal containing a notice, the terms of which are more restrictive than those provided in the notice in (a) above, the contracting officer shall inquire whether the offeror is willing to accept the conditions of the "Notice" in (a) above. Should the offeror not agree, local counsel should be consulted concerning the legal effect of the more restrictive conditions imposed by the offeror.

4.914 Foreign Proposals. Proposals from Foreign sources are additionally subject to the provisions of NPD 1362.1B, "Initiation and Development of International Participation and Cooperation in Aeronautical and Space Programs." Field Installations will forward purchase requests for foreign proposals to the Headquarters Contracts Division, Code HW-2, through the International Programs Division, Code LI, for procurement action.

4.915 University Proposals. The University Affairs Office will issue appropriate supplementary policies and procedures for internal NASA handling of unsolicited proposals submitted by colleges and universities, in accordance with applicable provisions of NMI 1103.18.

PART 7—CONTRACT CLAUSES

12. In Part 7, 7.104-54 is amended to change the date in the title of the clause to read "(June 1979)" in place of "(October 1976)", and paragraph (c) of the clause is revised as follows:

7.104-54 Financial Reporting of Government-Owned/Contractor-Held Property.

* * * * *

(c) The annual reporting period shall be from July 1 of each year to June 30 of the following year. The report shall be submitted by July 31.

PART 13—GOVERNMENT PROPERTY

13.703 [Amended]

13. In Part 13, 13.703, the introductory sentence is amended to delete the following words at the end of the sentence "under which NASA is to furnish to the contractor, or the contractor is to acquire, Government property."

PART 16—PROCUREMENT FORMS

16.001 [Amended]

14. In Part 16, 16.001(a) and (b) the date of NASA Form 1018 is amended to read "(1-79)" in place of "(7-76)" and the date of Standard Form 33 is amended to read "(3-77)" in place of "(11-69)."

APPENDIX B—CONTROL OF GOVERNMENT PROPERTY

15. In Appendix B, B.311(e) is revised to read as follows:

B.311 Financial Control Accounts and Reports.

* * * * *

(e) *Submission of Reports.* Four copies of the NASA Form 1018, or a negative report when appropriate, for the period ending June 30, shall be submitted by the contractor in accordance with the clause entitled "Financial Reporting of Government-Owned/Contractor-Held Property," not later than July 31 of each year.

Attachment 3 to Appendix B [Amended]

16. In Attachment 3 to Appendix B, in Instructions for the Preparation of NASA Form 1018, in (b) under "3. Submission of Report" the dates "August 31" and "September 25" are amended to read "June 30" and "July 31" respectively.

17. In Attachment 3 to Appendix B, in Instructions for the Preparation of NASA Form 1018, in (b) and (c) under 6. Space Hardware Reporting Requirements, the dates "August 1" and "September 1" are changed to read "June 1" and "July 1" respectively.

APPENDIX C—PROPERTY IN POSSESSION OF R&D CONTRACTORS

18. In Appendix C, C.311(e) is revised as follows:

C.311 Financial Control Accounts and Reports.

* * * * *

(e) Submission of Reports. Four copies of the NASA Form 1018, or a negative report when appropriate, for the period ending June 30 shall be submitted by the contractor in accordance with the clause

entitled "Finance Reporting of Government-Owned/Controlled Property", not later than July 31 of each year.

Attachment 3—Appendix C [Amended]

19. In Attachment 3 to Appendix C, in Instructions for the Preparation of NASA Form 1018, in (b) under 3. Submission of Report the dates "August 31" and "September 25" are amended to read "June 30" and "July 31" respectively.

20. In Attachment 3 to Appendix C, in Instructions for the Preparation of NASA Form 1018, in (b) and (c) under 6. Space Hardware Reporting Requirements the dates "August 1" and "September 1" are changed to read "June 1" and "July 1" respectively.

[FR Doc. 80-19563 Filed 6-27-80; 8:45 am]
BILLING CODE 7510-01-M

41 CFR Ch. 18, Parts 1 and 7

[Procurement Regulation Directive 79-6]

Regulatory Coverage and New Contract Clause Pursuant to the Contract Disputes Act of 1978

AGENCY: National Aeronautics and Space Administration.

ACTION: Final rule.

SUMMARY: This document is NASA implementation of the regulatory coverage and the new contract clause pursuant to the Contract Disputes Act of 1978. On November 1, 1978, the President signed into law the "Contract Disputes Act of 1978" (Pub. L. 95-563; 41 U.S.C. 601-613). This Act, among other things, establishes procedures and remedies to resolve disputes under Government contracts. The Office of Federal Procurement Policy (OFPP) issued interim implementation on February 26, 1979. (44 FR 12519, March 7, 1979).

EFFECTIVE DATE: June 30, 1980.

FOR FURTHER INFORMATION CONTACT: James H. Wilson, Policy Division (Code HP-1), Office of Procurement, NASA Headquarters, Washington, DC 20546, Telephone: 202-755-2237.

(42 U.S.C. 2473(c)(1))

Leroy E. Hopkins,
Acting Director of Procurement.

PART 1—GENERAL PROVISIONS

1. In Part 1, 1.116 is added as follows:

1.116 Fraudulent Claims.

(a) Section 5 of the Contract Disputes Act of 1978 (41 U.S.C. 601, 604) provides that if a contractor is unable to support any part of its claim under the contract and such inability is attributable to misrepresentation of fact or fraud on the part of the contractor, it shall be liable to the Government for:

(1) an amount equal to the unsupported part of the claim, and

(2) costs to the Government attributable to reviewing that part of the claim.

(b) "Misrepresentation of fact" is defined by the Contract Disputes Act as a false statement of substantive fact, or any conduct which leads to a belief of a substantive fact material to proper understanding of the matter in hand, made with intent to deceive or mislead.

(c) All instances of suspected fraudulent claims shall be reported through the Office of General Counsel (Code G), to the Attorney General.

2. In Part 1, 1.314 through 1.314-4 are revised as follows:

1.314 Contract Disputes Act of 1978.

(a) *General.* The Contract Disputes Act of 1978 (Public Law 95-563, 41 U.S.C. 601-613) establishes procedures and remedies to resolve disputes under Government contracts. It is the Government's policy, consistent with that Act, to try to resolve all disputes by mutual agreement at the contracting officer's level, without litigation. In appropriate circumstances, before issuance of a contracting officer's decision, informal discussions between the parties, to the extent feasible by individuals who have not participated substantially in the matter in dispute, can aid in the resolution of differences by mutual agreement and should be considered. The contracting officer is authorized (within any specific limitations in his warrant) to settle all disputes relating to a contract containing the Disputes clause in 7.103-12.

(b) *Exceptions to Use of Disputes Clause.* The Disputes clause is prescribed for use in all contracts covered by this Regulation, except contracts with a foreign government or agency thereof, or with an international organization or subsidiary body thereof, if the NASA Administrator determines that application of the Contract Disputes Act to the contract would not be in the public interest.

(c) *Exceptions to Applicability of Disputes Clause Procedures.* Under contracts containing the Disputes clause, the procedures and remedies in the clause and this paragraph do not apply to:

(i) any claim or dispute for penalties or forfeitures prescribed by statute or regulation which another Federal agency is specifically authorized to administer, settle, or determine, or

(ii) any claim involving fraud.

(d) *Public Law 85-804 Requests.* Requests for relief under Public Law 85-804 are not considered to be claims within the Contract Disputes Act of 1978 or the Disputes clause, and shall continue to be processed under Part 17 of this Regulation. However, certain kinds of relief formerly available within the agency only under Public Law 85-804 and not within the contracting officer's authority, such as alleged legal entitlement to rescission or reformation for mutual mistake, are now within the contracting officer's authority under the Act and the Disputes clause. In case of doubt, the contracting officer should obtain legal advice as to authority to settle or decide specific types of claims.

1.314-1 Contractor Certification of Claims Over $50,000. Any contractor claim over $50,000 (either initially or as amended) must be certified in accordance with paragraph (c) of the Disputes clause before settlement or decision on the claim.

1.314-2 Contracting Officer's Decision.

(a) When a claim cannot be satisfied or settled by agreement and a decision on the claim is necessary, the contracting officer shall:

(i) Review the facts pertinent to the claim;

(ii) Secure assistance from legal and other advisors; and

(iii) Coordinate with the contract administration office or contracting office, when appropriate.

(b) The contracting officer shall furnish a copy of the decision to the contractor, by certified mail, return receipt requested, or any other method that provides evidence of receipt, and include in the decision:

(i) A paragraph substantially as follows:

This is the final decision of the contracting officer. This decision may be appealed to the NASA Board of Contract Appeals. If you decide to make such an appeal you must mail or otherwise furnish written notice thereof to the NASA Board of Contract Appeals, within ninety days from the date you receive this decision. A copy thereof shall be furnished to the contracting officer from whose decision the appeal is taken. The notice shall indicate that an appeal is intended, should reference this decision, and identify the contract by number. In lieu of appealing to the NASA Board of Contract Appeals you may bring an action directly in the U.S. Court of Claims, within twelve months of the date you receive this decision.

(ii) A description of the claim or dispute;

(iii) A reference to pertinent contract provisions;

(iv) A statement of the factual areas of agreement or disagreement;

(v) A statement of the contracting officer's decision, with supporting rationale;

(vi) Notification that the small claims procedure of the NASA Board be applicable at the sole election of the contractor in the event the amount in dispute as a result of the final decision is $10,000 or less; and

(vii) Notification that the accelerated procedure of the NASA Board shall be applicable at the sole election of the contractor in the event the amount in dispute as a result of the final decision is $50,000 or less.

(c) The contracting officer shall issue the decision within the following statutory time limitations:

(i) For claims not exceeding $50,000: sixty days after receipt of the claim.

(ii) For submitted claims exceeding $50,000: sixty days after receipt of claim: provided, however, if a decision is not issued within sixty days the contracting officer shall notify the contractor of the time within which he will make the decision. The reasonableness of this period will depend on the size and complexity of the claim and the adequacy of the contractor's supporting data and any other relevant factors.

(d) The amount determined payable pursuant to the decision, less any portion already paid, normally should be paid without awaiting contractor action concerning appeal. Such payment shall be without prejudice to the rights of either party.

1.314-3 Government Claims Against the Contractor. All claims asserted by the Government againt a contractor relating to a contract which cannot be settled by agreement shall be the subject of a decision by the contracting officer.

1.314-4 Payment of Interest on Contractor's Claims. The Government shall pay interest on contractors' claims as prescribed in paragraph (d) of the Disputes clause.

PART 7—CONTRACT CLAUSES

3. In Part 7, 7.103-12 is revised as follows:

7.103-12 Disputes. Insert the following clause unless exempted by the Administrator under 41 U.S.C. 603(c). See 1.314.

Disputes (March 1979)

(a) This contract is subject to the Contract Disputes Act of 1978 (41 U.S.C. 601. *et seq.*). If a dispute arises relating to the contract, the Contractor may submit a claim to the Contracting Officer who shall issue a written decision on the dispute in the manner specified in NASA Procurement Regulation 1.314.

(b) "Claim" means:

(1) a written request submitted to the Contracting Officer;

(2) for payment of money, adjustment of contract terms, or other relief;

(3) which is in dispute or remains unresolved after a reasonable time for its review and disposition by the Government; and

(4) for which a Contracting Officer's decision is demanded.

(c) In the case of disputed requests or amendments to such requests for payment exceeding $50,000, or with any amendment causing the total request in dispute to exceed $50,000, the Contractor shall certify, at the time of submission as a claim, as follows:

I certify that the claim is made in good faith, that the supporting data are accurate and complete to the best of my knowledge and belief; and that the amount requested accurately reflects the contract adjustment for which the Contractor believes the Government is liable.

(Contractor's Name)

(Title)

(d) The government shall pay the Contractor interest:

(1) on the amount found due on claims submitted under this clause;

(2) at the rates fixed by the Secretary of the Treasury, under the Renegotiation Act, Public Law 92-41;

(3) from the date the Contracting Officer receives the claim, until the Government makes payment.

(e) The decision of the Contracting Officer shall be final and conclusive and not subject to review by any forum, tribunal, or Government agency unless an appeal or action is timely commenced within the times specified by the Contract Disputes Act of 1978.

(f) The contractor shall proceed diligently with performance of this contract, pending final resolution of any request for relief, claim, appeal or action related to the contract, and comply with any decision of the Contracting Officer.

4. In Part 7, 7.607-5 is revised as follows:

7.607-5 *Disputes.* Insert the clause set forth in 7.103-12.

[FR Doc. 80-19585 Filed 6-27-80; 8:45 am]

BILLING CODE 7510-01-M

41 CFR Ch. 18, Parts 3, 7, 13, 15, 16, 23, and Appendix E

[Procurement Regulation Directive 79-7]

Procurement Regulations; Miscellaneous Amendments

AGENCY: National Aeronautics and Space Administration.

ACTION: Final rule.

SUMMARY: The revisions in this NASA Procurement Regulation Directive 79-7 make substantial narrative changes and restructuring of Part 3.807 and other related areas in order to bring the NASA Procurement Regulation into closer alignment with the Defense Acquisition Regulation concerning the following areas: 1. Restructuring the "Certificate of Current Cost and Pricing Data." 2. Forward Pricing Rate Agreements (FPRA's).

EFFECTIVE DATE: June 30, 1980.

FOR FURTHER INFORMATION CONTACT: James H. Wilson, Policy Division (Code HP-1), Office of Procurement, NASA Headquarters, Washington, DC 20546, Telephone: 755-2237.

SUPPLEMENTARY INFORMATION: The major changes are summarized as follows:

1. The "Certificate of Current Cost or Pricing Data" (3.807-6(a)) has been expanded to include cost or pricing data supporting an advance agreement or forward pricing rate agreement (FPRA).

2. In Part 3, 3.807-6(e) now provides that the exercise of an option at the price established in the initial negotiation, in which certified cost or pricing data were used, does not require recertification.

3. In Part 3, 3.807-8 contains revised procedures for the establishment of forward pricing rate agreements.

4. The clauses in NASA Procurement Regulation 3.807-4, "Contractor and Subcontractor Certified Cost or Pricing Data," and 7.104-42, "Audit by National Aeronautics and Space Administration" are being replaced by the following:

(a) 3.807-6, "Certificate of Current Cost or Pricing Data";

(b) 7.104-28, "Price Reduction for Defective Cost or Pricing Data";

(c) 7.104-42, "Audit by National Aeronautics and Space Administration"; and

(d) 7.104-43, "Subcontractor Cost or Pricing Data."

5. DD Forms 633-1 through 633-6 are deleted.

(42 U.S.C. 2473(c)(1))

Leroy E. Hopkins,

Acting Director of Procurement.

PART 3—PROCUREMENT BY NEGOTIATION

3.404–4 [Amended]

1. In Part 3, the Table of Contents is amended to read "3.404–4 Fixed-Price Incentive Contracts . . . 3–4:6G" in place of "3.404–4 Fixed-Price Incentive Contracts . . . 3–4:6H."

2. In Part 3, 3.805 through 3.808–2 of the Table of Contents are revised as follows:

* * * * *

Subpart 8—Price Negotiation Policies and Techniques

* * * * *

3.805 Conduct of Negotiations, 3–8:16
3.805–1 General, 3–8:16
3.805–2 Cost-Reimbursement Type Contracts, 3–8:18
3.805–3 Use of Parallel Short-Term Contracts in Selecting System Design Concepts, 3–8:18A
3.806 Cost, Profit, and Price Relationships, 3–8:18A
3.807 Pricing of Negotiated Contracts, 3–8:18A
3.807–1 General, 3–8:18A
3.807–2 Price Analysis and Cost Analysis Techniques, 3–8:19
3.807–3 Requirement for Cost or Pricing Data, 3–8:20
3.807–4 Subcontractor Cost or Pricing Data, 3–8:22
3.807–5 Refusal to Provide Cost or Pricing Data, 3–8:22
3.807–6 Certificate of Current Cost or Pricing Data, 3–8:23
3.807–7 Adequate Price Competition, Catalog or Market Prices and Prices Set by Law or Regulation, 3–8:24
3.807–8 Forward Pricing Rate Agreements (FPRA's), 3–8:29
3.807–9 Subcontract Pricing Considerations, 3–8:31
3.807–10 Defective Cost or Pricing Data, 3–8:34A
3.807–11 Overhead Rate Considerations, 3–8:34C
3.807–12 Forward Pricing Rate Agreements, 3–8:34C
3.808 Profit or Fee, 3–8:34E
3.808–1 General, 3–8:34E
3.808–2 Factors for Determining Fee or Profit, 3–8:34E

* * * * *

3. In Part 3, Table of Contents, paragraphs 3.850, 3.851 and 3.854–4 are revised as follows:

* * * * *

3.850 Initiation of the Procurement Request, 3–8:44A
3.851 [Reserved], 3–8:44A

* * * * *

3.854–4 Unsuccessful Offerors, 3–8:54

* * * * *

4. 3.402 [Amended]

In Part 3, 3.402(a)(1) the reference 3.807–2(b) is amended to read 3.807–2(a).

5. In Part 3, 3.404–3(c) and (d) are revised and (e) is added as follows:

3.404–3 *Fixed-Price Contract With Economic Price Adjustment.*

* * * * *

(c) *Application.*

(1) *Adjustments Based on Established Prices.* One of the clauses in 7.106 shall be used in accordance with the following instructions. If none of these clauses is applicable, an economic price adjustment clause approved by the Director of Procurement may be included.

a. Price Adjustment for Basic Steel, Aluminum, Brass, Bronze or Copper Mill Products. The price adjustment clause at 7.106–1 is authorized for use in fixed-price supply contracts for basic steel, aluminum, brass, bronze or copper mill products, such as sheets, plates and bars, when an established catalog or market price exists for the particular product being procured and has been verified in accordance with criteria in 3.807–7(b). The 10 percent figure in paragraph (c)(1) of the clause shall not be exceeded unless approved by the Procurement Officer. No adjustment under this clause shall be made in the contract price until the requested adjustment has been verified by the contracting officer, in accordance with the criteria set forth in 3.807–7(b) and as required by paragraph (c)(4) of the clause.

b. Price Adjustment for Nonstandard Steel Items. The price adjustment clause at 7.106–2 is authorized for use in fixed-price supply contracts when:

(i) the contractor is a steel producer and actually manufactures the standard steel mill item referred to in paragraph (d) of the clause: and

(ii) the items being procured and nonstandard steel items made wholly or in part of standard steel mill items. When this clause is included in invitations for bids, Note (8) of the clause is inapplicable and shall be omitted. Invitations for bids or requests for proposals shall instruct bidders or offerors to complete all blanks in accordance with the applicable notes. When the clause is to provide for adjustment based on the contractor's "established price" (see paragraphs (a) and (d) of the clause and Note (8) of the clause), the established price shall be verified in accordance with 3.807–7(b) prior to contract award. When the clause is to provide for adjustment on another basis (see Note (8) of the clause), that price must be verified. No adjustment under this clause shall be made in the contract price until the requested adjustment has been verified by the contracting officer, in accordance with criteria set forth in 3.807–7(b) (but see Note (8) of the clause) and as required by paragraph (f) of the clause. The 110% figure in paragraph (e) of the clause shall not be exceeded unless approved by the Procurement Officer after coordination with the installation Financial Management Officer.

c. Price Adjustment for Standard Supplies. The price adjustment clause at 7.106–3 is authorized for use in negotiated fixed-price supply contracts for standard supplies for which established catalog or market prices exist and have been verified in accordance with criteria in 3.807–7(b). The clause should normally be used only when the total contract price is over $5,000 and delivery is not to be completed within six months after the contract date. No adjustment under this clause shall be made in the contract price until the requested adjustment has been verified by the contracting officer, in accordance with the criteria set forth in 3.807–7(b) and as required by paragraph (c)(4) of the clause. The 10 percent figure in paragraph (c)(1) of the clause shall not be exceeded unless approved by the Procurement Officer after coordination with the installation Financial Management Officer. If any standard trade discounts offered by the contractor from his list or catalog price are taken into account in negotiating the contract unit price, the contracting officer's file shall contain a statement setting forth the list or catalog price and the discounts. The discounts referred to do not include prompt payment or cash discounts.

d. Price Adjustment for Semistandard Supplies. The price adjustment clause at 7.106–4 is authorized for use in negotiated fixed price supply contracts for semistandard supplies, the prices of which can be reasonably related to the prices of nearly equivalent standard supplies for which established catalog or market prices exist and have been verified in accordance with criteria in 3.807–7(b). The clause should normally be used only when the total contract price is over $5,000 and delivery is not to be completed within six months after the contract date. No adjustment under this clause shall be made in the contract price until the requested adjustment has been verified by the contracting officer, in accordance with the criteria set forth

in 3.807–7(b) and as required by paragraph (c)(4) of the clause. A clear understanding shall be set forth in writing prior to entering into the contract as to the identity of the standard supply items and corresponding contract line items to which the clause in 7.106–4 applies. The 10 percent figure in subparagraph (c)(1) of the clause shall not be exceeded unless approved by the Procurement Officer after coordination with the installation Financial Management Officer. If any standard trade discounts offered by the contractor from his list or catalog price are taken into account in negotiating a contract unit price, the contracting officer's file shall contain a statement setting forth the list or catalog price and the discounts. The discounts referred to do not include prompt payment or cash discounts. When the supplies being purchased are standard supplies in all respects except for preservation, packaging, and packing requirements, this clause should not be used; in such cases, the clause for standard supplies, in 7.106–3, is the appropriate clause.

(2) *Adjustment Based on Labor or Material Costs (Actual Cost Method).*

a. The price adjustment clause in 7.107 is authorized for use in negotiated fixed price supply and service contracts when there is no major element of design engineering or developmental work involved in producting the items being procured and one or more identifiable labor or material cost factors are subject to change. The clause shall be limited to contracts in which the price exceeds $50,000 and the period of performance exceeds six months unless its use otherwise is approved by the Procurement Officer. An appropriate modification of the clause may be used in advertised procurements, in accordance with 2.104.

b. The Schedule shall describe in detail the types of labor and materials subject to adjustment, the labor rates (including fringe benefit, if any), and unit prices of materials, which may be increased or decreased, and the quantities of labor and specified materials allocable to each unit of supplies to be delivered under the contract. The following sample format illustrates a type of schedule description that may be used:

The following types of labor and material are subject to price adjustment pursuant to the "Economic Price Adjustment-Labor and Material" clause of this contract.

Contract Item No. 1

Types of Labor and materials	Rates of pay and material prices	Quantities and direct costs per unit of procurement
Drill Press Operator	$3.00/hour no fringe benefits included	
	$3.00	20 min—$1.00
Welder	$2.75/hour .05/hour—vacation pay .20/hour—pension plan	
	$3.00	10 min.—$.50
Copper Sheet	$.40/lb.	2 lb.—$.80
Purchased parts:		
(1) ABC tube X5721	$1.00 each	8 ea.—$3.00
(2) XYZ part No. 9348.	$.50 each	10 ea.—$5.00

c. The 10 percent figure in subparagraph (c)(vi) of the clause shall not be exceeded unless approved by the Procurement Officer after coordination with the installation Financial Management Officer. There shall be no percentage limitation on the amount of decrease. Decreases shall be the full amount of decrease in the labor rates and fringe benefits or unit prices for materials.

d. In negotiating adjustments under the clause, the contracting officer shall consider work in process and materials on hand at the time of changes in labor rates (including fringe benefits, if applicable) or material prices since these elements may have a significant impact on price adjustments. The price adjustment shall not include general and administrative expenses, profit, or overhead (except for fringe benefits as defined in 15.205–6(g)). Fringe benefits must be set forth in the schedule in order to be considered in any economic price adjustment.

e. If the specific terms and conditions of the clause authorized in *a* above are not applicable, a modified economic price adjustment clause to cover increases or decreases to the actual costs incurred by the contractor for labor or materials may be included if it is consistent with the guidelines contained in *a* through *d* above and is approved by the Director of.

(3) *Adjustments Based on Labor or Material Costs (Cost Index Method) a.* As an alternative to the provisions authorized by (1) and (2) above, consideration should be given to inclusion of a special economic price adjustment clause designed to minimize contingency pricing and prepared under the guidelines listed in *b* below, when (i) there will be an extended period of performance with significant costs to be incurred beyond one year after commencement of contract performance, (ii) the contract amount subject to adjustment is substantial and (iii) the economic variables for labor and material are determined to be too unstable to reflect a reasonable division of risk between the parties absent economic price adjustment provisions.

b. All economic price adjustment clauses utilizing indices require advance approval by the Director of Requests for such approval shall be submitted to the Office of Procurement, NASA Headquarters, Code HR.

c. The following factors may be considered in preparing a price adjustment clause meeting the criteria of *a* above including construction of appropriate indices:

1. The clause should not be overly complex:

2. Normally, the clause should not provide either a ceiling or a floor for adjustment unless adjustment is based on indices below the four digit level of the Bureau of Labor Statistics Wholesale Price Index (Material) or the Wage and Income Series by Standard Industrial Classification (Labor).

3. Normally, the clause should cover all potential economic fluctuations within the original contract period of performance.

4. The clause must have a positive and accurate identification of the applicable index(es) upon which adjustments will be based and provide appropriate economic fluctuation in the event of the discontinuance of the publication of the movement of the designated index. This might include the substitution of another index is the time remaining would so justify and an appropriate index is reasonably available, or some other method for repricing of the remaining portion of the work to be performed. There should not normally be any need to make an adjustment in the event computation of the identified index is altered; however, provision may be made to adjust the economic fluctuation computations in the event there is such a substantial alteration to the method of computing the index as to negate the original intent of the parties.

5. An index should be structured to encompass a large sample or relevant items yet bear a logical relationship to the type of contract costs being measured. The basis of the index should not be so large and diverse that it is significantly affected by fluctuations not relevant to the contract performance, yet must be significantly broad so as to assure the minimal effect of any single company, including the anticipated contractors.

6. Construction of an index is largely dependent upon two general series published by the U.S. Department of

Labor, Bureau of Labor Statistics (BLS). These are the Industrial Commodities portion of the Wholesale Price Index for material and the Wage and Income Series by Standard Industrial Classification for Labor. Since there are no BLS published series currently available that relate directly to total prices of delivered items of aeronautical electronics, space property, etc., such composite indices from major portions of the two series described above should be made.

7. Normally not more than two indices should be used, *i.e.*, one for labor (direct and indirect) and one for material (direct and indirect).

8. The clause must establish and properly identify a base period comparable to the contract periods for which adjustments are to be made as a reference point for application of an index.

9. The clause should provide for adjustment from the beginning of the contract or from such period of time that the rate of expenditure is commensurate with the administrative cost and effort to adjust, but it should not provide for adjustment beyond the original contract performance period.

10. The expenditure profile for both labor and material should be based on a predetermined rate of expenditure (expressed as the percentage of material or labor usage as it relates to total contract price) in lieu of actual cost incurred. In the event the clause is to be used in a competitive procurement, the labor and material allocations, with regard to both mix of labor and material and rate of expenditure by percentage, shall be determined by the contracting officer in a manner which will, as nearly as possible, approximate the average expenditure profile of all companies to be solicited in order that all companies may compete on an equal basis. If the clause is to be used in a noncompetitive procurement, the labor and material allocations as determined by the contracting officer may be subject to negotiation and agreement.

11. The clause should state that percentage of the contract price subject to price adjustment. Normally, adjustments would not be applied to the profit portion of the contract. Additionally, the labor and material portions of the contract must be examined to exclude any areas that do not require adjustment. It may not be necessary, for example, to include all subcontracting as being subject to escalation because some of the subcontracting could be for shorter periods of time during the early life of the contract and, would be covered therefore, by firm priced subcontracting. It may be possible to exclude certain areas of overhead from escalation protection: for example, depreciation charges, prepaid insurance costs, rental costs, leases, certain taxes, and utility charges are illustrated as some of the areas that should be examined in detail. In the same manner, consideration should be given to the necessity to include economic fluctuation protection covering that portion of labor for the period of time for which a definitive union agreement exists without additional factoring for such things as cost of living increases. Care should be taken to allocate to labor and material only those costs likely to be affected by fluctuation in the economy. That portion of the contract which is determined to be proper for economic fluctuation protection shall then be allocated to specific periods of time (*e.g.*, quarterly, semiannually, etc.) based on the most probable expenditure or commitment basis (expenditure profile).

12. The clause should provide for definite times or events positive for price adjustments. Adjustments should be of such a frequency so as to afford the contractor appropriate economic relief without at the same time creating a burdensome administrative effort. The adjustment period should normally range from a minimum of quarterly to a maximum of annually.

13. When the contract contains cost incentives, any sums paid to the contractor on account of economic price adjustment provisions shall be subtracted from the total of the contractor's allowable cost for the purpose of establishing the total costs to which the cost incentive provisions apply. If the incentive arrangement is cited in percentage ranges rather than dollar ranges, above and below target costs, the economic price adjustment clause should be structured to maintain the original contract incentive range in dollars.

14. The economic price adjustment clause should provide that once the labor and material allocations have been established, they remain fixed through the life of the contract and are not modified except in the event of partial termination of the contract. The clause should state that pricing actions pursuant to the Changes clause or other provisions of the contract will be priced as though there were no provision for economic price adjustment.

(d) Consistent with the factors set forth in (c)(3)*b* above, the contracting officer may also determine it appropriate to provide for certain economic price adjustment arrangements between the prime contractor and subcontractors to properly allocate risks. In such circumstances, provision for incorporation of price adjustment clauses in specified subcontracts should be included in the price adjustment provision of the prime contract.

(e) When economic price adjustment provisions are included in contracts that do not require submission of cost or pricing data as provided for in 3.807-3 it will be the responsibility of the contracting officer to obtain adequate information to establish the base line from which adjustments will be made. In addition, the contracting officer may require verification of the date submitted to the extent considered necessary to permit reliance upon it as a reasonable base line.

3.405-6 [Amended]

6. In Part 3, 3.405-6(c)(2) "As to fee limitations on subcontracts, see 3.807-9(e)." is added at the end of the paragraph.

3.801-2 [Amended]

7. In Part 3, 3.801-2(c) the reference in the last sentence "3.807-6" is amended to read "3.807-5."

8. In Part 3, 3.801-5(a) and (b)(1)(D) are revised as follows:

3.801-5 *Responsibility of DoD Field Pricing Support Personnel.*

(a) *Field Pricing Support.* Field pricing support involves analysis of the contractor's price proposal by any or all of the field technical and professional specialists including, but not limited to, the cognizant contract administration office; contract auditor; price analyst; quality assurance personnel; engineers; legal counsel and small business specialists. The cognizant contract administration office shall function as the team manager for all NASA contracting officer requests for field pricing support. Therefore all requests for field pricing support shall be forwarded to the cognizant field contract administration activity. However, there shall be no constraints on the lines of communication with the contracting officer, contract administration office, and contract auditor interface.

(b) * * *

(1) * * *

(D) Established catalog or market prices for commercial items which constitute the major portion of the prime contract price proposal.

* * * * *

3.801-5 [Amended]

9. In Part 3, 3.801-5(b)(2) is amended to change the reference in the last sentence "3.807-2(b))" to read "3.807-2(a))."

3.801-5 [Amended]

10. In Part 3, 3.801-5(b) the reference in the last sentence of paragraph (9)

"3.807-3(c)" is changed to read "3.807-3(e)." The reference in the second sentence of paragraph (10) "3.807-3(d)) is changed to read "3.807-3(a))." In the parenthetical phrase of paragraph (12), first sentence, the forth word "or" is amended to read "of."

3.806 [Amended]

11. In Part 3, 3.806(b) the first sentence is revised to read "Profit or fee is only one element of price and normally represents a much smaller proportion of the total price than do such other estimated elements as labor and material."

12. In Part 3, 3.807 is revised as follows:

3.807 Pricing of Negotiated Contracts.

3.807-1 General. Policies set forth in this Subpart may be applied in a variety of ways in evaluating proposals and negotiating contract prices. These provisions apply equally to initial and subsequent price negotiations.

(a) *Definitions.*

(1) *Cost or pricing data* consists of all facts existing up to the time of agreement on price which prudent buyers and sellers would reasonably expect to have a significant effect on price negotiations. Cost or pricing data embraces more than historical accounting data. It also includes such factors as all vendor quotations, nonrecurring costs, changes in production methods and production or procurement volume, data in support of contractor projections of business prospects and objectives, together with related costs of operations, unit cost trends such as those associated with labor efficiency, make-or-buy decisions and estimated resources to attain business goals and any other management decisions which reasonably could be expected to have a significant bearing on costs under a proposed contract, *e.g.*, the comparative analysis by which a particular vendor was selected. In short, cost or pricing data consist of all facts which reasonably can be expected to contribute to sound estimates of future costs as well as to the validity of costs already incurred. Cost or pricing data, being factual, are that type of information which can be verified.

(2) *Price analysis* is the process of examining and evaluating a prospective price without evaluation of the separate cost elements and profit proposed by the individual prospective supplier whose price is being evaluated.

(3) *Cost analysis* is the review and evaluation of a contractor's cost or pricing data and of the judgmental factors applied in projecting from the data to the estimated costs, in order to form an opinion on the degree to which the contractor's proposed costs represent what performance of the contract should cost, assuming reasonable economy and efficiency.

(4) *Indirect costs* are those costs commonly known as overhead. See 3.701-3 and 15.203 for more detailed treatment.

(5) *Forward Pricing Rate Agreements (FPRA's)* are written agreements negotiated between a contractor and the Government to make certain rates available for use during a specified period of time in pricing contracts or modifications. FPRA's represent reasonable projections of specific costs to be incurred in future periods that are not easily estimated for, identified to, or generated by a specific contract, contract end-item or task, such as but not limited to labor rates, overhead rates, material obsolescence and usage, spare parts provisioning, and material handling.

(b) *Evaluation and Pricing of Individual Contracts.* Each contract shall be priced separately and independently and no consideration shall be given to losses or profits realized or anticipated in the performance of other contracts. This prohibition neither prevents the negotiation of indirect costs and other rates applicable to several contracts nor prohibits FPRA's applicable to several contracts.

(c) *Specified Contingencies.* When a contract is to include a provision for adjustment of price upon the happening of a specified contingency (*e.g.*, economic price adjustment clauses, Government-furnished property clauses, tax clauses), the contract price should not include any amount on account of such contingency.

(d) *Requirement for Price or Cost Analysis.* Some form of price or cost analysis is required in connection with every negotiated procurement action. The method and degree of analysis, however, is dependent on the facts surrounding the particular procurement and pricing situation. Cost analysis shall be performed when cost or pricing data are required to be submitted. The extent of cost analysis should be that necessary to assure reasonableness of the pricing result, taking into consideration the amount and complexity of the proposed contract. Price analysis shall be used in all other instances to determine the reasonableness of the proposed contract price. Normally, a sound conclusion as to value cannot be made on the basis of cost analysis alone. Depending on the information available, a price arrived at by cost analysis should be corroborated through price analysis techniques.

3.807-2 Price Analysis and Cost Analysis Techniques.

(a) Price analysis may be accomplished in various ways including:

(1) the comparison of the price quotations submitted;

(2) the comparison of prior quotations and contract prices with current quotations for the same or similar end-items (to provide a suitable basis for comparison, appropriate allowances must be made for differences in such factors as time of prior purchases, specifications, quantities ordered, time for delivery, Government-furnished materials, and experienced trends of improvement in production efficiency; it must also be recognized that such comparison may not detect an unreasonable current quotation unless the reasonableness of the prior prices was established and unless changes in the general level of business and prices have been condidered);

(3) the use of parametric relationship measurements or rough yardsticks (such as dollars per pound, per horsepower, or other units), to point up apparent gross inconsistencies which should be subjected to greater pricing inquiry;

(4) the comparison of prices set forth in published price lists issued on a competitive basis, published market prices of commodities and similar indicia, together with discount or rebate arrangements; and

(5) the comparison of proposed prices with estimates of cost independently developed by the Government.

(b)(1) Cost Analysis includes the appropriate verification of cost or pricing data, the evaluation of specific elements of costs and the projection of these data to determine the effect on prices of such factors as:

(i) the necessity for certain costs,

(ii) the reasonableness of amounts estimated for the necessary costs,

(iii) allowances for contingencies,

(iv) the basis used for allocation of indirect costs; and

(v) the appropriateness of allocations of particular indirect costs to the proposed contract.

(2) Cost analysis also shall include appropriate verification that the contractor's cost submissions are in accordance with Part 15, Contract Cost Principles and Procedures, and when applicable, the rules, regulations and standards of the Cost Accounting Standards Board.

(3) Among the evaluations that should be made, where the necessary data are available, are comparisons of a contractor's or offeror's current estimated costs with:

(i) actual costs previously incurred by the contractor or offeror;

(ii) either his last prior cost estimate or a series of prior estimates for the same or similar items;

(iii) current cost estimates from other possible sources;

(iv) prior estimates or historical costs of other contractors manufacturing the same or similar items; and

(v) forecasts of planned expenditures.

(4) Forecasting future trends in costs from historical cost experience is of importance, but care must be taken to assure that the effect of past inefficient or uneconomical practices are not projected into the future. An adequate cost analysis must include an evaluation of trends and changes in circumstances, if any, and their effect on future costs.

3.807–3 Requirement for Cost or Pricing Data

(a) When appropriate, the contracting officer shall require the contractor to submit, either actually or by specific identification in writing, cost or pricing data in support of his proposal. The contracting officer also shall require the contractor, in circumstances specified in (b) below, to certify, using the certificate set forth 3.807–6, that the cost or pricing data submitted are accurate, complete, and current. Cost or pricing data shall not be required merely in anticipation of post-award review of the contract.

(b) Cost or pricing data are required as part of a proposal leading to, and certification is required prior to:

(i) the award of any negotiated contract (except for unpriced actions such as letter contracts) expected to exceed $100,000 in amount;

(ii) the pricing of any modification to any formally advertised or negotiated contract whether or not cost or pricing data were required in connection with the initial pricing of the contract when the modification involves aggregate increases and/or decreases in costs plus applicable profits expected to exceed $100,000. (For example, the requirement applies to a $30,000 modification resulting from a reduction of $70,000 and an increase of $40,000, or as another example, when the modification results in no change in contract price because there is an increase of $200,000 and a reduction of $200,000. However, this requirement shall not apply when unrelated and separately priced changes for which cost or pricing data would not be required are included in the same modification for administrative convenience.);

(iii) the award of any negotiated contract not expected to exceed $100,000 in amount, or any contract modification not expected to exceed $100,000 in amount to any contract whether or not cost or pricing data were required in connection with the initial pricing of the contract, provided the contracting officer considers that the circumstances warrant such action; unless the price negotiated is based on adequate price competition, established catalog or market prices of commercial items sold in substantial quantities to the general public, or prices set by law or regulation. The requirements under (i) and (ii) above may be waived in exceptional cases when the Director of Procurement authorizes such waiver and states in writing the reasons for such determination.

(c) Unless required to be submitted on one of the termination forms set forth in 16.700, data will be submitted on a DD Form 633. Data supporting FPRA's or final indirect cost proposals will not be submitted on the DD Form 633, but will be submitted in a format acceptable to the contracting officer. The requirement for submission of cost or pricing data is met when all cost or pricing data reasonably available to the contractor have been submitted or identified in writing at the time of agreement on price. The data shall be submitted to the contracting officer or his representative. There is a clear distinction to be made between "submitting" cost or pricing data and merely "making available" books, records and other documents without identification. The latter does not constitute submission of cost or pricing data.

(d) Certified cost or pricing data shall not be requested prior to the award of any contract anticipated to be for $25,000 or less and generally should not be requested for modifications in those amounts. There should be relatively few instances where certified cost or pricing data and the inclusion of defective pricing clauses would be justified in awards between $25,000 and $100,000. In most such awards, the administrative costs will outweigh the benefits which might otherwise accrue from receipt of certified cost or pricing data; hence all other means of determining reasonableness of price should be utilized. When less than complete cost analysis (*e.g.*, analysis of only specific factors) will provide a reasonable pricing result on awards under $100,000 without the submission of complete cost or pricing data, the contracting officer shall request only that data which he considers adequate to support the limited extent of the cost analysis required and he will not require certification.

(e) When it is anticipated from the outset that there will be adequate price competition, cost or pricing data shall not be requested regardless of the dollar amount involved. If, after cost or pricing data were initially requested and received, it is determined that adequate price competition does exist, the data need not be certified. As a general rule, cost or pricing data should not be requested when it has been determined that proposed prices are, or are based on, established catalog or market prices of commercial items sold in substantial quantities to the general public or are prices set by law or regulation. When, however, despite the existence of an established catalog or market price of commercial items sold in substantial quantities to the general public, the contracting officer finds that the price is not reasonable and supports such finding by an enumeration of the facts upon which it is based, cost or pricing data may be requested if necessary to establish a reasonable price: *provided*, that such finding is approved by the Procurement Officer.

(f) When economic price adjustment provisions are included in competitive procurements, see 3.404–3(e).

3.807–4 Subcontractor Cost or Pricing Data.

(a) Any prime contractor who has been required to submit and certify cost or pricing data shall be required to obtain cost or pricing data from his subcontractors under the circumstances set forth in the appropriate clause in 7.104–43. To the extent practicable, such data shall be obtained incident to the negotiation and award of the prime contract and shall be submitted in support of each subcontract estimate included in the prime contractor's proposal to the contracting officer. These requirements, appropriately modified to relate to a higher tier subcontractor rather than the prime contractor, shall apply to lower-tier subcontracts under subcontracts for which subcontractor cost or pricing data are required.

(b) Cost or pricing data furnished by a subcontractor or prospective subcontractor must be submitted to the prime contractor or higher-tier subcontractor. It is the responsibility of the prime contractor and higher-tier subcontractor to review and evaluate the subcontractor proposal and supporting cost or pricing data and furnish the results of such review and evaluation to the Government as part of their cost or pricing data submission.

3.807–5 Refusal to Provide Cost or Pricing Data. If cost or pricing data from the contractor are required to permit adequate analysis of the contractor's proposal and the contractor has refused to provide such data, the contracting officer shall use those means available

to him in attempting to secure such data. If the contractor persists in his refusal to provide necessary data, the contracting officer shall withhold making the award or price adjustment. In such event, he shall refer the procurement action to higher echelons of the procurement organization. Such referral shall include a complete statement of the attempts made to resolve the matter, including (i) steps taken to secure essential cost or pricing data, (ii) efforts to secure the contractor's cooperation in the establishment of a satisfactory business relationship, (iii) any assurances offered, such as agreements to adequately safeguard information furnished, and (iv) a statement concerning the practicability of obtaining the supplies or services from another source.

3.807-6 Certificate of Current Cost or Pricing Data.

(a) When a Certificate of Current Cost or Pricing Data is required, the certificate set forth below shall be included in the contract file along with the memorandum of the negotiation, see 3.811. The contractor shall be required to submit only one certificate which shall be submitted as soon as practicable after agreement is reached on the contract or modification price.

Certificate of Current Cost or Pricing Data

This is to certify that, to the best of my knowledge and belief, cost or pricing data as defined in NASA PR 3.807-1(a)(1) submitted, either actually or by specific identification in writing (see NASA PR 3.807-3(a)) to the Contracting Officer or his representative in support of .....[1] are accurate, complete, and current as of (day)(month)(year) .....[2]

This certification includes the cost or pricing data supporting any advance agreement(s) and forward pricing rate agreements between the offeror and the Government which are part of the proposal.

Firm _____
Name _____
Title _____
Date of Execution [3] _____

(b) Because the certificate pertains to "cost or pricing data," it does not make representations as to the accuracy of the contractor's judgment on the estimated portion of future costs or projections. It does, however, apply to the data upon which the contractor's judgment is based. This distinction between fact and judgment should be clearly understood.

(c) Whenever a Certificate of Current Cost or Pricing Data is required, the applicable clause in 7.104-28 shall be included in the contract.

(d) Although cost or pricing data were requested in the solicitation, a Certificate of Current Cost or Pricing Data shall not be requested in connection with the award of any contract of any dollar value where the price negotiated is based on adequate price competition, established catalog or market prices of commercial items sold in substantial quantities to the general public, or prices set by law or regulation.

(e) The exercise of an option at the price estabished in the initial negotiation in which certified cost or pricing data were used, does not require re-certification.

(f) Negotiated final pricing actions such as total final price agreements under fixed price incentive and redeterminable contracts, final overhead rate settlements under cost type contracts, or partial termination settlement agreements under any type of contract are contract modifications for which certified cost or pricing data are required. A certificate shall be submitted as soon as practicable after agreement is reached on the amount of the modification. That certificate is required when the amount of the total final price agreement exceeds $100,000 or partial termination settlement agreement plus the estimate to complete exceeds $100,000.

(g) A Certificate of Current Cost or Pricing Data is not a substitute for examination and analysis of the contractor's proposal.

(h) Data supplied during negotiation of an advance agreement and FPRA's (see 3.807-8 and 15.107) will not be certified at the time of agreement. When an advance agreement is used in partial support of a later contractual action which does require certification, the price proposal certificate will cover both the data originally supplied to support the advance agreement referenced on the DD Form 633 and all data required to update the specific price proposal data to the time of agreement on the contract price.

3.807-7 Adequate Price Competition, Catalog or Market Prices and Prices Set by Law or Regulation. The terms "adequate price competition,". "established catalog or market prices of commercial items sold in substantial quantities to the general public." and "prices set by law or regulation" shall be construed in accordance with the following guidelines.

(a) *Adequate Price Competition.*

(1) Price competition exists if offers are solicited and (i) at least two responsible offerors, (ii) who can satisfy the requirements, (iii) independently contend for a contract to be awarded to the responsive and responsible offeror submitting the lowest evaluated price, (iv) by submitting priced offers responsive to the expressed requirements of the solicitation. Whether there is price competition for a given procurement is a matter of judgment to be based on evaluation of whether each of the foregoing conditions is satisfied. Generally, in making this judgment, the smaller the number of offerors, the greater the need for close evaluation.

(2) If the foregoing conditions (i) through (iv) are met, price competition shall be presumed to be adequate unless it is determined that:

(i) the solicitation was made under conditions that unreasonably deny to one or more known and qualified offerors an opportunity to compete;

(ii) the low competitor has such a determinative advantage over the other competitors that he is practically immune to the stimulus of competition in proposing a price (e.g., a determinative advantage because substantial costs, such as start-up or other nonrecurring expenses, have already been absorbed in connection with previous sales, thus placing the competitor in a preferential position); or

(iii) the lowest final price is not reasonable and this finding is supported by an enumeration of the facts upon which it is based; *provided,* that such finding is approved by the Procurement Officer or his deputy.

(3) A price is "based on" adequate price competition if it results directly from such competition or, if price analysis (not cost analysis) shows clearly that the price is reasonable in comparison with current or recent prices for the same or substantially the same items procured in comparable quantities under contracts awarded as a result of adequate price competition (e.g., (i) exercise of an option in a contract for which there was adequate price competition if the option price has been determined to be reasonable in accordance with 1.1505(d) and (ii) an item normally is procured competitively but in a particular situation only one offer is solicited or received, and the price clearly is reasonable in comparison with recent purchases of comparable quantities for which there was adequate price competition.)

(4) Prices based on adequate price competition exempt offerors from the requirements for submission and certification of cost or pricing data. *(But see 3.1200 for CAS requirements.)*

(b) *Established Catalog or Market Prices of Commercial Items Sold in Substantial Quantities to the General Public.*

(1) In order for a given price to qualify as a catalog or market price for exemption from the requirements of Public Laws 87–653 or 91–379, the price must either be, or be based on, an established catalog or market price of commercial items, sold in substantial quantities, to the general public. Application of this exemption requires analysis on a case-by-case basis. In making the judgment that the exemption applies, the various elements of the criteria must be considered and a price must meet all these conditions.

(2) The following criteria should be applied to determine whether an item falls within the scope of this exemption:

(a) *"Established Catalog Price."* This is a price included in a catalog, price list, schedule, or other form that is regularly maintained by the manufacturer or vendor, is either published or otherwise available for inspection by customers, and states prices at which sales are currently, or were last, made to a significant number of buyers constituting the general public.

(b) *Established Market Price.* This is a current price, established in the usual and ordinary course of trade between buyers and sellers free to bargain, which can be substantiated from sources independent of the manufacturer or vendor.

(c) *"Commercial Item."* This is an item, which term includes both supplies and services, of a class or kind which is used regularly for other than Government purposes, and is sold or traded in the course of conducting normal business operations.

(d) *"Sold in Substantial Quantities."*

(i) Commercial items meet this criterion when the facts or circumstances support a reasonable conclusion that the quantities regularly sold are sufficient to constitute a real commercial market for the supplies or services. Nominal quantities, such as models, specimens, samples, and prototype or experimental units, cannot be considered as meeting this requirement. Services are sold in substantial quantities if they are customarily provided by the contractor, with personnel regularly employed, and with equipment, if any is necessary, regularly maintained, solely or principally for the purpose of providing such services. There must be a sufficient number of commercial buyers so that their purchases establish an ascertainable going price for the service.

(ii) DD Form 633–7. *"Claim for Exemption from Submission of Certified Cost or Pricing Data,"* establishes three categories of sales: Category A—sales to the U.S. Government or to contractors for U.S. Government use; Category B—sales to the general public at catalog prices; and, Category C—sales to the general public at other than catalog prices. Although substantial quantity cannot be defined precisely, sales to the general public normally are regarded as substantial if all the following criteria are met: Category B and C sales are not negligible in themselves and total 55 percent or more of the total of Category A, B and C sales; and Category B sales total 75 percent or more of the total of Category B and C sales. If Category B and C sales total less than 35 percent of the total of Category A, B and C sales, or Category B sales are less than 55 percent of the total of Category B and C sales, the contracting officer should rarely grant an exemption. When percentages fall between those stated above, the contracting officer should make an analysis before granting an exemption.

(e) *"The General Public."* An item meets this criterion when it is sold (i) to other than the Government (including FMS), (ii) to other than affiliates of the seller, or (iii) for end use by other than the Government (including FMS). Items sold to affiliates of the seller and sales for end use by the Government are not sales to the general public.

(3) A price may be considered to be "based on" established catalog or market prices of commercial items sold in substantial quantities to the general public if the item being purchased is sufficiently similar to such a commercial item to permit the difference between the prices of the items to the identified and justified without resort to cost analysis. In addition, cost or pricing data may be requested, if necessary, where there is such a disparity between the quantity being procured and the quantity for which there is such a catalog or market price that pricing cannot reasonably be accomplished by comparing the two. Where an item is substantially similar to a commercial item for which there is an established catalog or market price at which substantial quantities are sold to the general public, but the offered price of the former is not considered to be "based on" the price of the latter, any requirement for cost or pricing data should be limited to that pertaining to the differences between the items if this limitation is consistent with assuring reasonableness of the pricing result. In determining exemptions, it is the item under consideration that must meet the test. The ultimate objective is to achieve fair and reasonable prices for items bought. Altered terms, minor configuration changes, extra inspection requirements, or quantity differences are adequate reasons for pricing items differently from catalog or market prices.

(4) The Form DD 633–7, *"Claim for Exemption from Submission of Certified Cost or Pricing Data"*, was designed to provide the information necessary to determine an item's exemption from the requirement to submit and certify cost or pricing data. (It also can be used to determine exemption from the requirements arising out of Public Law 91–379 relating to cost accounting standards.) However, the contracting officer may dispense with a DD Form 633–7 when:

a. Within the past year, the contractor or subcontractor has claimed exemption for the same or similar item and the Government has acted favorably on that claim. In this case, the contractor may reference or submit a copy of the prior submission and indicate the Government's action. Note 3 of DD Form 633–7 states the details of this alternative.

b. In anticipation of repetitive procurements of a catalog item, the contracting officer or the cognizant contract administration office has made special arrangements for submission of the exemption claim. The submission need not be on a DD Form 633–7, but shall include any data required by the form and include or incorporate by reference all the applicable definitions, representations and rights included in the form. Government approval of the exemption claim shall set forth the effective period, usually not more than one year, and require the contractor to furnish any later information that might raise a question as to the continuation of the exemption. Such approval may be extended to other Government purchasing offices with their concurrence.

c. Before initiating a procurement, the contracting officer is satisfied, on the basis of a recent prior submission by a prospective contractor or because of his knowledge of the time, sources, prevailing prices, market conditions, or otherwise, that the item has an acceptable established catalog or market price or price set by law or regulation. In this case the contracting officer may, by a solicitation provision or otherwise, either dispense with the requirement for a DD Form 633–7 or limit the data required to be submitted by the form. For example, if the item being procured is similar to a commercial item (see 3.807–7(b)(2)(c)), only an explanation of a price differential may be needed. If the fact of substantial sales to the general public is well known, the actual sales prices, but

not the quantity, of sales may be required.

(5) In exceptional cases the relevant data may justify a catalog or market price exemption even though the prescribed criteria are not strictly satisfied in all respects. In such cases, if the contracting officer is satisfied, on the basis of a DD Form 633-7 or other submission, that an exemption should be made or considered, he may forward the matter to the Procurement Officer who may authorize an exemption on an individual or class basis. The quantity and prices of actual non-government sales in relation to the sales and prices offered to the Government, as these relationships may be influenced by prevailing trade practices, are the important factors to be considered. The Government's need and the offeror's resistance are not appropriate considerations.

(6) Even though an item qualifies for exemption from the requirements for submission of certified cost or pricing data, price analysis must be performed to determine the reasonableness of the price and the need for further negotiation. This analysis will often require more information than is contained in the DD Form 633-7. Unless the additional information required is available from Government sources, it may be necessary to obtain it from the prospective supplier. The specific information will vary with the procurement involved but may include:

(i) the supplier's marketing system, that is, use of jobbers, brokers, sales agencies, distributors, etc.;

(ii) the services normally provided to commercial purchasers (*e.g.*, engineering, financing, advertising or promotion);

(iii) normal quantity per order; and

(iv) annual volume of sales to largest customers.

(7) The contracting officer may verify or obtain verification (including assistance by audit or contract administration personnel) if he deems it necessary to satisfy himself of the reliability of the data in the light of his general knowledge of the product, the market and prior Government purchases. The access to the offeror's books and records granted by the DD Form 633-7, or necessary with other submissions, is limited to actual sales and other data directly pertinent to the factual basis for the exemption claimed. It does not extend to cost, profit or other data solely relevant to the reasonableness of the catalog or proposed price. When exemption is based on an established catalog or market price, the contracting officer shall assure that all applicable criteria are satisfied.

(8) Subcontractors' submissions supporting claims for exemption shall be made through intermediate subcontractors if any, to the prime contractor who may submit them at any time to the contracting officer for an advance review of the acceptability of an exemption claim but otherwise the prime contractor shall submit them with his proposal or request for subcontract consent; or other action by the contracting officer, whichever comes first.

(c) *Prices Set by law or Regulation.*

(1) A price set by law or regulation is exempt from the requirements of Public Law 87-653 and Public Law 91-379. Some governmental body must be responsible for determining the price or range of prices that the offeror will charge customers, including other governmental agencies. Pronouncements in the form of periodic orders, reviews or similar actions of a public body, or embodied in the laws are sufficient to establish the price to be paid.

(2) DD Form 633-7 will be used to justify this exemption. However, the contracting officer may elect to dispense with all or part of the submission under the same conditions and with the same restrictions set forth in connection with catalog or market prices.

(3) Subcontractor claims for this exemption will be processed in the same manner as exemptions claimed for established catalog or market prices.

3.807-8 Forward Pricing Rate Agreements (FPRA's).

(a) FPRA's shall be negotiated by the cognizant Department of Defense administrative contracting officer (ACO) on his own initiative, on the request of the contracting officer, or on request of the contractor. In determining whether or not to establish such an agreement, the ACO should consider whether the benefits to be derived from the existence of the agreement are commensurate with the effort necessary to establish and monitor it. Normally, these agreements are warranted at contractor locations where a significant volume of proposals is processed. The contract auditor and procurement representatives having a significant interest shall be invited to participate in the negotiation to aid in the establishment of sound projections of anticipated business, the determination of reasonable levels of indirect costs, and mutual understanding of the results of the negotiation. Such coordination will assist in the negotiation of major procurements, thereby optimizing the use of resources and maximizing the applicability of the rates to forward pricing actions. The department or agency having plant cognizance shall make the determination as to when FPRA's will be established.

(b) FPRA rates will be used for forward pricing actions during the period of the agreement, subject to the ACO's final determination with respect to the significance of reported changed conditions which may affect the use of those rates.

(1) Changed conditions may be reported by the contracting officer, contract administration personnel, the contract auditor, or the contractor. In assessing changed conditions, the ACO will consider: (i) the type of contract contemplated; (ii) whether the dollar amount of the proposed contract action would significantly change the rates in the agreement; (iii) whether the performance period of the proposed contract action is significantly different from the period to which the rate agreement applies; and (iv) any new data or other information that may raise a question as to the acceptability of the rates.

(2) When the ACO determines that FPRA rates are still valid, he will so advise the interested party who reported the altered conditions.

(3) When the ACO determines that the changed conditions negate the FPRA rates, he shall immediately (i) notify procurement representatives having a significant interest (for example, a contracting officer negotiating a contract), and (ii) initiate appropriate action to enter into negotiation for revised FPRA's.

(4) When procurement representatives have received notice that changed conditions negate FPRA's, individual procurement actions should not be delayed. Pending negotiation of revised FPRA's, the changed conditions should be reflected in the individual procurement actions.

(c) Prior to entering into a forward pricing rate agreement, the administrative contracting officer will obtain a proposal from the contractor which contains cost or pricing data which are accurate, complete and current as of the date of submission. A Certificate of Current Cost or Pricing Data (3.807-6) is not required at this time. The administrative contracting officer will conduct a review and analysis utilizing the services of the contract auditor and technical personnel to the extent necessary. Buying activities having a significant interest shall be afforded the opportunity to assist in the development of a unified Government objective. Upon completion of negotiation a memorandum of negotiation will be prepared (see 3.811).

Copies of this memorandum of negotiation will be distributed to all procurement offices that provided support and to the cognizant Government auditor as soon as practicable.

(d) The forward pricing rate agreement shall provide specific terms and conditions covering expiration, applications and data requirements for systematic monitoring of the agreement to assure the validity of the rates. The agreement shall provide for cancellation at the option of either party, and shall require the contractor to submit to the administrative contracting officer and to the cognizant contract-auditor any significant change in cost or pricing data.

(e) The DD Form 633 requires offerors to describe, in their procurement proposals, any forward pricing rate agreement. When the FPRA is used, offerors are required to identify the latest cost or pricing data already submitted in accordance with the rate agreement. All data submitted in connection with the FPRA, updated as necessary, form a part of the total data that the contractor certifies to be accurate, complete and current at the time of agreement on price of a contract or contract modification.

(f) Indirect costs, commonly known as overhead, are defined and described in 15.203. Criteria for treatment and application of indirect costs to contracts are also set forth in 15.203. To assure a reasonable approximation and allocation of indirect costs on an equitable basis to individual contracts, negotiators shall utilize audited overhead data or negotiated overhead rates, when available, in connection with negotiation of contracts and shall not, unless authorized by the Director of Procurement, seek preferential overhead rates. If there is any question with respect to audited overhead data or negotiated overhead rates, or if such are not available, the negotiator should normally avail himself of the advisory services of the cognizant Government auditor in consonance with 3.809.

3.807-9 Subcontract Pricing Considerations.

(a) *General*

(1) Subcontract costs and pricing arrangements are significant elements to be considered during negotiation of prime contracts and during contract administration.

(2) Basic responsibility rests with the prime contractor for decisions to make or buy, for selection of subcontractors, for subcontract prices, and for subcontract performance. The contracting officer who is responsible for negotiating the contract price with the prime contractor must have adequate knowledge of these elements as they affect prime contract prices.

(b) *Subcontracting Considerations.* Contractors' make-or-buy programs and proposed subcontracts must be reviewed in accordance with Subpart 9 of this Part and with Part 23. Information from these reviews should be used in evaluating subcontract costs when negotiating prime contract prices. The contracting officer, when appropriate, should obtain information from the contractor concerning:

(i) the prime contractor's purchasing practices; and

(ii) the principal items to be subcontracted and the prospective or actual subcontractors, including (A) the extent of competition obtained or expected to be obtained, (B) the basis for the subcontract costs included in the contract pricing proposal (DD Form 633), (C) any contractor cost or price analyses of subcontract proposals, including the cost or pricing data submitted by subcontractors, (D) the pricing arrangement contemplated or negoatiated, and (E) the extent of subcontract supervision.

(c) *Review of Subcontract Costs in a Prime Contractor Proposal.*

(1) The contracting officer is reponsible for the reasonableness of the prime contract price which includes satisfying himself as to the reasonableness of the subcontract costs included in the prime contract price. A field pricing support report is usually required in determining reasonableness of the prime contract price. In some instances, it may be necessary to obtain field pricing support of proposed subcontracts. On the basis of a request from the contracting officer, the contract administration office cognizant of the prime contractor may request field pricing support from the contract administration office cognizant of the prospective subcontractor. These actions will be taken in accordance with 3.801-5.

(2) If the prime contractor's analysis is not considered adequate, the ACO will return the analysis package to the contractor for re-accomplishment indicating areas of inadequacy. In this case, the prime contractor will accomplish or cause the accomplishment of the additional review and resubmit the package to the contract administration office.

(3) If the contracting officer believes that a subcontract at any tier requires field pricing support by the Government, notwithstanding availability of data or analysis done by the prime contractor, he may request such action. This request may be made along with the initial request for field pricing support of the prime or subsequently. This generally will be done only when:

(i) there is a business relationship between the prime contractor and subcontractor not conducive to independence and objectivity, as in the case of a parent-subsidiary or when prime and subcontracting roles of the companies are frequently reversed; or

(ii) the contractor is sole source and the subcontract costs represent a substantial part of the prime contractor costs; or

(iii) the prime contractor was denied access to the subcontractor's records; or

(iv) the contracting officer determnines that, because of factors such as the magnitude of the proposed subcontract price, a subcontract or subcontracts at any tier are critical to a fully detailed analysis of the prime contract proposal. The purpose is to satisfy the contracting officer, notwithstanding the prime contractor analysis, that these elements of the total proposed price are reasonable.

(4) In those instances where the contracting officer requests the cognizant contract administration office to review subcontractor's cost estimates, the request shall be accompanied by a copy of the review package accomplished by the prime contractor or higher-tier subcontractor, including: (i) the subcontractor's proposal; (ii) DD Form 633; (iii) other related cost and pricing data provided by the subcontractor; and (iv) when available, the results of the prime contractor's or higher-tier subcontractor's cost/price analysis.

(5) The appropriate contract administration activities will be notified by the contracting officer when review and evaluation of subcontractors' proposals; (i) will require extensive field pricing assistance in connection with a major acquisition, or (ii) require special or expedited action by field pricing personnel and such action is being, or has been, delayed.

(d) *Review of Subcontract After Award of the Prime Contract.*

(1) In the review of subcontracting there should be assurance that the contractors obtain competition, if available, from qualified sources in their award of subcontracts to the extent consistent with the procurement of the required services or supplies. Contractors shall be required to undertake price analysis in all significant subcontract transactions, and to undertake cost analysis when certified subcontract cost or pricing data are required. Where the contracting officer's consent to subcontract is required in accordance with 23.200,

price or cost analysis shall be required as a condition of such consent and the policies and procedures set forth in 3.807-9(c) (1), (2), and (3) shall be used to evaluate the subcontract price.

(2) When the Government performs the analysis of the subcontract proposal in lieu of the prime contractor because access to the subcontract records was denied to the prime contractor or higher-tier subcontractor, the Government will furnish, to the prime contractor or higher-tier subcontractor, with the consent of the subcontractor reviewed, the summary of the analysis performed by the Government in arriving at a determination of the unacceptable costs included by element in the subcontract proposal. Absent such consent, a range of unacceptable costs for each element will be furnished.

(3) When subcontracts have been placed on a price redetermination or fixed-price incentive basis and the prime contract is to be repriced, it may be appropriate to negotiate a firm prime contract price, even though the contractor has not yet established final subcontract prices. The contracting officer may do this when convinced the amount included for subcontracting is reasonable, e.g., where realistic cost or pricing data on subcontract efforts are available. However, even though the available cost data are highly indefinite and there is a distinct chance that one or more of the subcontracts eventually may be redetermined at prices that are lower than those predicted in redetermining the prime contract price, other circumstances may require the prompt negotiation of the final contract price. In such a case, the contract modification which evidences the revised contract prices should provide for adjustment of the total amount paid or to be paid under the contract on account of subsequent redetermination of the specified subcontracts. This may be done by including in the contract modification a provision substantially as follows:

"Promptly upon the establishment of firm prices for each of the subcontracts listed below, the Contractor shall submit, in such form and detail as the Contracting Officer may reasonably require, a statement of costs incurred in the performance of such subcontract and the firm price established therefor. Thereupon, notwithstanding any other provisions of this contract as amended by this modification, the Contractor and the Contracting Officer shall negotiate an equitable adjustment in the total amount paid or to be paid under this contract to reflect such subcontract price revision. The equitable adjustment shall be evidenced by a modification to this contract.

"List Subcontracts"

(e) *Subcontract Fee Considerations.*

(1) In considering cost-plus-fixed-fee subcontracts, while negotiating prime contracts where cost analysis is performed, the contracting officer will make every effort to ensure, but in consenting to cost-plus-fixed-fee subcontracts the contracting officer shall ensure, that fees under such subcontracts, never exceed

(i) ten percent (10 percent) of the estimated cost, exclusive of fee, in the case of any subcontract for experimental, developmental, or research work; or

(ii) seven percent (7%) of the estimated cost, exclusive of fee, in the case of any other subcontract; except that subcontracts for architectural or engineering services are subject to the statutory limitations set forth in 4.204-1(b): unless the payment of higher fees is approved by the Procurement Officer. However, such fixed-fees shall not exceed the statutory limitations set forth in 10 U.S.C. 2306(d).

(2) For cost-plus-incentive-fee subcontracts, incentive fee arrangements are subject to the provisions of 3.450(f), except that in consenting to such subcontracts, maximum fees which exceed (i) 15 percent of the target cost in subcontracts for experimental, developmental, or research work, or (ii) 10 percent of the target cost in other contracts require the approval of the Procurement Officer.

3.807-10 Defective Cost or Pricing Data.

(a) Where any price to the Government must be negotiated largely on the basis of cost or pricing data submitted by the contractor, it is essential that the data be accurate, complete and current and in appropriate cases so certified by the contractor (see 3.807-3 and 3.807-6). If such certified cost or pricing data is subsequently found to have been inaccurate, imcomplete or noncurrent as of the effective date of the certificate, the Government is entitled to an adjustment of the negotiated price, including profit or fee, to exclude any significant sum by which the price was increased because of the defective data. The clauses in 7.104-28 give the Government in such case an enforceable contract right to a price adjustment, that is, to a reduction in the price to what it would have been if the contractor had submitted accurate, complete and current data. In arriving at a price adjustment under this clause, the contracting officer should, after review of the record of the contract negotiation (see 3.811), consider the following:

(1) The time when cost or pricing data was reasonably available to the contractor. Certain data such as overhead expenses and production records may not be reasonably available except on normal periodic closing dates. Also, the data on numerous minor material items, each of which by itself would be insignificant, may be reasonably available only as of a cut-off date prior to agreement on price because the volume of transactions would make the use of any later data impracticable. Furthermore, except where a single item is used in substantial quantity, the net effect of any changes to the prices of such minor items would likely be insignificant. Closing or cut-off dates should be included as a part of the data submitted with the contractor's proposal and should be updated by the contractor to the latest closing or cut-off dates, preceding agreement on price, for which such data is available. The contracting officer and the contractor are encouraged to reach a prior understanding on criteria for establishing closing or cut-off dates, and to the extent possible the understanding should relate to an approved estimating system. Notwithstanding the foregoing, matters which are significant to contractor management and to Government, and any related data, would be expected to be current on the date of agreement on price and therefore will be treated as reasonably available as of that date. Although changes in the labor base or in prices of major material items are generally significant matters, no hard and fast rule can be laid down since what is significant can depend upon such circumstances as the size and nature of the procurement.

(2) In establishing that the defective data caused an increase in the contract price, the contracting officer is not expected to reconstruct the negotiation by speculating as to what would have been the mental attitudes of the negotiating parties if the correct data had been submitted at the time of agreement on price. In the absence of evidence to the contrary, the natural and probable consequence of defective data is an increase in the contract price in the amount of the defect plus related burden and profit or fee; therefore, unless there is a clear indication that the defective data was not used, or was not relied upon, the contract price should be reduced in that amount.

(3) In determining the amount of an adjustment in the contract price because of defective cost or pricing data, the contracting officer shall consider any understated cost or pricing data

submitted in support of price negotiations for the same pricing action (*e.g.*, for the initial pricing of the same contract or for pricing the same change order), up to the amount of the Government's claim for overstated costs or pricing data arising out of the same pricing action. Such offsets, however, need not be in the same cost groupings (*e.g.*, material, labor or overhead).

(b) If, at any time prior to agreement on price, the contracting officer learns through audit or otherwise that any cost or pricing data submitted is inaccurate, incomplete or noncurrent, he shall immediately call it to the attention of the contractor whether that defective data tends to increase or decrease the contract price. Thereafter, the contracting officer shall negotiate on the basis of any new data submitted, or on a basis which in his opinion makes satisfactory allowance for the incorrect data as he considers appropriate and shall reflect these facts in his record of negotiation.

(c) After award, if the contracting officer obtains information which leads him to believe that the data furnished may not have been accurate, complete or current, or if he considers that the data may not have been adequately verified as of the time of negotiation, he should request an audit to evaluate the accuracy, completeness and currency of such data. In the case of negotiated firm fixed-price contracts, post-award cost performance audit, pursuant to the clause set forth in 7.104–42, shall be limited to the single purpose of determining whether or not defective cost or pricing data were submitted. Such audits shall not be for the purpose of evaluating profit-cost relationships, nor shall any repricing of such contracts be made because the realized profit was greater than was forecast, or because some contingency cited by the contractor in his submission failed to materialize, unless the audit reveals that the cost or pricing data certified by the contractor were, in fact, defective.

(d) Under 10 U.S.C. 2306(f), as implemented by the clauses set forth in 7.104–28 and 7.104–43, the Government's right to reduce the prime contract price extends to cases where the prime contract price was increased by any significant sums because of subcontractor furnished defective cost or pricing data in connection with a subcontract where a certificate of cost or pricing data was or should have been furnished. In some cases, as where the defective nature of a subcontractor's data is only disclosed by Government audit, the information necessary to support a reduction in prime contract and subcontract prices may be available only from the Government. In effecting a prime contract reduction, the contracting officer should make such necessary information available, upon request, to the prime contractor or higher tier subcontractors; however, if the release of such information would compromise security or disclose trade secrets or other confidential business information, it shall be made available only under conditions that will fully protect it from improper disclosure, as may be prescribed or authorized by the Director of Procurement. Information made available pursuant to this paragraph shall be limited to that used as the basis for the prime contract price reduction.

(e) Inasmuch as price reductions under the clauses set forth in 7.104–28 and 7.104–43 may involve first- and lower-tier subcontractors as well as the prime contractor, the contracting officer should give the prime contractor reasonable advance notice before making a determination to reduce the contract price under such clause, in order to afford the prime contractor an opportunity to take any action deemed advisable by him, particularly in connection with any subcontracts that may be involved.

3.807–11 Overhead Rate Considerations.

(a) Indirect costs commonly known as overhead are defined and described in 15.203. Criteria for treatment and application of indirect costs to contracts are also set forth in 15.203.

(b) In order to assure a reasonable approximation and allocation of indirect costs on an equitable basis to individual contracts, negotiators shall utilized audited overhead data or negotiated overhead rates, where available, in connection with negotiation of contracts and shall not, unless authorized by the Procurement Officer, seek preferential overhead rates.

(c) If there is any question with respect to audited overhead data or negotiated overhead rates, or if such are not available, the negotiator should normally avail himself of the advisory services of the cognizant contract auditor in consonance with 3.809.

3.807–12 Forward Pricing Rate Agreements.

(a) *Definition.* A forward pricing rate agreement is a written understanding negotiated between a contractor and the Government to make certain rates available for use during a specified period of time in pricing contracts or modifications. Such rates represent reasonable projections of specific costs to be incurred in future periods that are not easily estimated for, identified to, or generated by a specific contract, contract end item or task such as but not limited to labor rates, overhead rates, material obsolescence and usage, spare parts provisioning, and material handling.

(b) *Establishment.* Forward pricing rate agreements may be negotiated by the contracting officer on his own initiative or on request of the contractor. Normally, these agreements shall be negotiated by a Department of Defense administrative contracting office (ACO). In determining whether or not to establish such an agreement, the contracting officer should consider whether the benefits to be derived from the existence of the agreement are commensurate with the effort necessary to establish and monitor it. Normally, these agreements are warranted at contractor locations where a significant volume of proposals is processed.

(c) *Use.* The rates specified in the agreement are not binding but are available for use by the contractor and Government personnel during the period of the agreement. In deciding whether to use such rates in pricing contracts or modifications, the contracting officer should consider: (i) the type of contract contemplated; (ii) whether the dollar amount of the proposed contract action would significantly change the rates in the agreement; (iii) whether the performance period of the proposed contract action is significantly different from the period to which the rate agreement applies; and (iv) any new data or other information that may raise a question as to the acceptability of the rates. However, in the absence of any specific reason to question the rates, the contracting officer may rely upon and use them, subject to (d)(1) below, without revalidation of the data, negotiations or judgments that lead to the establishment of the forward pricing rate agreement.

(d) *Procedure.* Prior to entering into a forward pricing rate agreement, the contracting officer will obtain a proposal from the contractor which contains cost or pricing data which is accurate, complete and current as of the date of submission. However, a certificate is not required at this time. The contracting officer will conduct a review and analysis. Advice and recommendations of other contracting officers having a particular interest in the forward pricing rate agreement should be solicited. Upon completion of negotiation, a memorandum of negotiation will be prepared.

(1) The forward pricing rate agreement shall provide specific terms and conditions covering expiration, application and data requirements for systematic monitoring of the agreement

to assure the validity of the rates. The agreement shall provide for cancellation at the option of either party. The duration of the agreement normally shall not exceed one year. As a minimum, the agreement shall require the contractor to submit to the contracting officer and to the cognizant contract auditor any significant change in cost or pricing data.

(2) Note 10 on the DD Form 633 requires offerors to describe, in their procurement proposals, any forward pricing rate agreement. When the forward pricing rate agreement is used, offerors are required to identify the latest cost or pricing data already submitted in accordance with the rate agreement. All data submitted in connection with the forward pricing rate agreement, updated as necessary, form a part of the total data that the contractor certifies to be accurate, complete and current at the time of agreement on price of a contract or contract modification.

13. In Part 3, 3.809(d)(iii)(C) is revised as follows:

3.809 *Contract Audit as a Pricing Aid.*

* * * * *

(c) the source of data used in developing the estimates and in assuring that such data is accurate, complete and current;

* * * * *

14. In Part 3, 3.811(a) the third sentence is revised to read as follows:

3.811 *Record of Negotiation.*

(a) * * * If cost or pricing data were submitted and a certificate of current cost or pricing data was required (3.807–6), the memorandum shall reflect the extent to which reliance was not placed upon the factual cost or pricing data submitted and the extent to which this data was not used by the contracting officer in determining his total price objective and in negotiating the final price.

* * * * *

3.812 [Amended]

15. In Part 3, 3.812 the reference in the first sentence "3.807–5(c)" is amended to read "3.807–10".

3.1204 [Amended]

16. In Part 3, 3.1204–1(a)(i) the reference "3.807–3(i)" in next to the last sentence is amended to read "3.807–7(b)."

3.1300–7 [Amended]

16. In Part 3, 3.1300–7(a) the reference "3.807–12(b)" is amended to read "3.807–8."

PART 7—CONTRACT CLAUSES

17. In Part 7, Table of Contents, 7.104–15 is revised as follows:

7.104–15	Examination of Records by Comptroller General	7-1 8A

18. In Part 7, Table of Contents 7.104–28 through 7.104–36 are revised as follows:

* * * * *

7.104–28	Price reduction for Defective Cost or Pricing Data	7-1 10A
7.104–29	through 7 104-34 [Reserved]	7-1 10C
7 104–35	Progress Payments	7-1 10C
7 104–36	Preference for United States-Flag Vessels	7-1 14

* * * * *

19. In Part 7, Table of Contents 7.104–41 through 7.104–60 are revised as follows:

* * * * *

7 104–41	Subcontractor Cost or Pricing Data	7-1 15
7 104–42	Audit by National Aeronautics and Space Administration	7-1 15
7.104–43	Subcontractor Cost or Pricing Data	7-1 16A
7 104–44	[Reserved]	7-1 16C
7.104–45	Limitation of Liability	7-1 16C
7 104–46	through 7 104-49 [Reserved]	7-1 16E
7 104–50	Optional Data Requirements	7-1 16E
7.104–51	Approval of Contract	7-1 16E
7.104–52	[Reserved]	7-1 16F
7.104–53	NASA Financial Management Reporting	7-1 16F
7.104–54	Financial Reporting of Government-Owned/Contractor-Held Property	7-1 17
7.104–55	Cost Accounting Standards	7-1 18
7.104–56	Order of Precedence	7-1.20F
7.104–57	Liability for Government Property Furnished for Repair or Other Services	7-1.20F
7.104–58	Safety and Health	7-1.20F
7.104–59	Non-Use of Foreign-Flag Vessels Engaged in Cuban or North Vietnam Trade	7-1.20G
7 104–60	Report on NASA Subcontracts	7-1.20G

* * * * *

20. In Part 7, Table of Contents 7.106–1 and 7.106–2 are revised as follows:

* * * * *

7.106–1	Price Adjustment Clause for Basic Steel, Aluminum, Brass, Bronze or Copper Mill Products	7-1.24A
7.106–2	Price Adjustment Clause for Nonstandard Steel Items	7-1.25

* * * * *

21. In Part 7, Table of Contents 7.303–90 is revised and 7.303–91 is added as follows:

* * * * *

7 303–90	Change Order Accounting	7-3 6A
7.303–91	Notice of Intent to Disallow or Not Recognize Costs	7-3 6A

* * * * *

22. In Part 7, Table of Contents 7.404–2 through 7.404–54 are revised as follows:

* * * * *

7 404–2	Alterations in Contract	7-4 8B
7 404–3	[Reserved]	7-4 8B
7 404–4	Bill of Materials	7-4 8B
7 404–5	Stop Work Orders	7-4 8B
7 404–50	Notice of Delay	7-4 8B
7 404–51	[Reserved]	7-4 8B
7 404–52	Date of Incurrence of Costs	7-4 8B
7 404–53	Inventions Made Under Contractor's Independent Research and Development Programs	7-4 8B
7 404–54	through 7 404-56 [Reserved]	7-4 8B

* * * * *

23. In Part 7, Table of Contents 7.451–3 through 7.451–7 are revised as follows:

* * * * *

7 451–3	Allowable Cost and Payment	7-4 10
7 451–4	Standards of Work	7-4 10
7 451–5	Inspection	7-4 10
7 451–6	Assignment of Claims	7-4 10
7 451–7	Examination of Records by Comptroller General	7-4 10

* * * * *

24. In Part 7, Table of Contents 7.452–64 through 7.452–86 are revised as follows:

* * * * *

7 452–64	through 7.452-85 [Reserved]	7-4:21
7 452–86	Notification of Changes	7-4:21

* * * * *

25. In Part 7, Table of Contents 7.452–89 and 7.452–90 are deleted.

26. In Part 7, Table of Contents 7.901–3 through 7.901–6 are revised as follows:

* * * * *

7.901–3	Excusable Delays	7-9:2
7.901–4	Termination	7-9:2
7 901–5	Government Property	7-9:4A
7.901–6	Payments	7-9:4A

* * * * *

27. In Part 7, 7.103–2 the last paragraph is removed and the following language is inserted:

1 7.103–2 *Changes.*

* * * * *

In the foregoing clause the period of "30 days" within which any claim for adjustment must be asserted may be varied not to exceed "60 days." In accordance with 10 U.S.C. 2306(f), prior to the pricing of any contract change or modification that is expected to exceed $100,000, except where the price is based on adequate price competition, established catalog or market prices of commercial items sold in substantial quantities to the general public, or prices set by law or regulation, the contracting officer shall require the contractor to furnish a Certificate of Current Cost or Pricing Data (see 3.807–6) and shall assure that the contract includes or is modified to include a defective pricing data clause (see 7.104–28) and the audit clause required by 7.104–42.

28. In Part 7, 7.104–28 is added as follows:

7.104–28 Price Reduction for Defective Cost or Pricing Data.

(a) The following clause shall be inserted in negotiated contracts which when entered into exceed $100,000, except where the price is based on adequate price competition, established catalog or market prices of commercial items sold in substantial quantities to the general public, or prices set by law or regulation. In addition, the contracting officer shall include this clause in other negotiated contracts for which he has obtained a Certificate of Current Cost or Pricing Data in accordance with 3.807–3(b)(iii) in connection with the initial pricing of the contract, or for which he has obtained partial cost or pricing data in accordance with 3.807–3(d).

Price Reduction for Defective Cost or Pricing Data (August 1979)

(a) If any price, including profit or fee, negotiated in connection with this

contract or any cost reimbursable under this contract was increased by any significant sums because the Contractor, or any subcontractor pursuant to the clause of this contract entitled "Subcontractor Cost or Pricing Data" or "Subcontractor Cost or Pricing Data—Price Adjustments" or any subcontract clause therein required, furnished cost, or pricing data which was not accurate, complete and current as certified in the Contractor's or Subcontractor's Certificate of Current Cost or Pricing Data, then such price or cost shall be reduced accordingly and the contract shall be modified in writing as may be necessary to reflect such reduction.

(b) Failure to agree on a reduction shall be a dispute concerning a question of fact within the meaning of the "Disputes" clause of this contract.

(Note.—Since the contract is subject to reduction under this clause by reason of defective cost or pricing data submitted in connection with certain subcontracts, it is expected that the contractor may wish to include a clause in each such subcontract requiring the subcontractor to appropriately indemnify the contractor. However, the inclusion of such a clause and the terms thereof are matters for negotiation and agreement between the contractor and the subcontractor, provided that they are consistent with NASA PR 23.203 relating to Disputes provisions in subcontracts. It is also expected that any subcontractor subject to such indemnification will generally require substantially similar indemnification for defective cost or pricing data required to be submitted by this lower tier subcontractors.)

(c) Insert the following clause in all contracts, both formally advertised and negotiated, which when entered into exceed $100,000 except those containing the clause set forth in (a) above.

Price Reduction for Defective Cost or Pricing Data—Price Adjustments (August 1979)

(a) This clause shall become operative only with respect to any modification of this contract which involves a price adjustment in excess of $100,000 except where the price is based on adequate price competition, established catalog or market prices of commercial items sold in substantial quantities to the general public, or prices set by law or regulation. The right to price reduction under this clause shall be limited to such price adjustments.

(b) If any price, including profit, or fee, negotiated in connection with any price adjustment under this contract was increased by any significant sums because the Contractor or any subcontractor, pursuant to the clause of this contract entitled "Subcontractor Cost or Pricing Data—Price Adjustment" or any subcontract clause therein required, furnished cost or pricing data which was not accurate, complete and current as certified in the Contractor's or subcontractor's Certificate of Current Cost or Pricing Data, then such price shall be reduced accordingly and the contract shall be modified in writing as may be necessary to reflect such reduction.

Note.—Since the contract is subject to reduction under this clause by reason of defective cost or pricing data submitted in connection with certain subcontracts, it is expected that the contractor may wish to include a clause in each such subcontract requiring the subcontractor to appropriately indemnify the contractor. However, the inclusion of such a clause and the terms thereof are matters for negotiation and agreement between the contractor and the subcontractor, *provided* that they are consistent with NASA PR 23.203 relating to Disputes provisions in subcontracts. It is also expected that any subcontractor subject to such indemnification will generally require substantially similar indemnification for defective cost or pricing data required to be submitted by his lower tier subcontractors.

(c) Failure to agree on a reduction shall be a dispute concerning a question of fact within the meaning of the "Disputes" clause of this contract.

(d) The requirement for inclusion of the above clauses in contracts with foreign governments or agencies thereof may be waived in exceptional cases by the Director of Procurement, stating in writing the reasons for such determination.

29. In Part 7, 7.104–41 and 7.104–42 are revised and 7.104–43 is added as follows:

7.104–41 Subcontractor Cost or Pricing Data. In accordance with the requirements of 3.807–3, insert the clause set forth in 7–104–43.

7.104–42 Audit by National Aeronautics and Space Administration.

(a) Insert the following clause in all contracts (except those entered into by formal advertising which are not expected to exceed $100,000).

Audit by National Aeronautics and Space Administration (August 1979)

(a) *General.* The Contracting Officer or his representative shall have the audit and inspection rights described in paragraphs (b), (c) and (d) below.

(b) *Examination of Costs.* If this is a cost reimbursement type, incentive, time and materials, labor, hour, or price redeterminable contract, or any combination thereof, the Contractor shall maintain, and the Contracting Officer or his representatives shall have the right to examine books, records, documents, and other evidence and accounting procedures and practices, sufficient to reflect properly all direct and indirect costs of whatever nature claimed to have been incurred and anticipated to be incurred for the performance of this contract. Such right of examination shall include inspection at all reasonable times of the Contractor's plants, or such parts thereof, as may be engaged in the performance of this contract.

(c) *Cost or Pricing Data.* If the Contractor submitted cost or pricing data in connection with the pricing of this contract or any change or modification thereto, unless such pricing was based on adequate price competition, established catalog or market prices of commercial items sold in substantial quantities to the general public, or prices set by law or regulation, the Contracting Officer or his representatives who are employees of the United States Government shall have the right to examine all books, records, documents and other data of the Contractor related to the negotiation, pricing or performance of such contract, change or modification, for the purpose of evaluating the accuracy, completeness and currency of the cost or pricing data submitted. Additionally, in the case of pricing any change or modification exceeding $100,000 to formally advertised contracts, the Comptroller General of the United States or his representatives who are employees of the United States Government shall have such rights. The right of examination shall extend to all documents necessary to permit adequate evaluation of the cost or pricing data submitted, along with the computations and projections used therein.

(d) *Reports.* If the Contractor is required to furnish financial management reports, cost or performance data, the Contracting Officer or his representatives shall have the right to examine books, records, other documents, and supporting materials, for the purpose of evaluating (i) the effectiveness of the Contractor's policies and procedures to produce data compatible with the objectives of these reports, and (ii) the data reported.

(e) *Availability.* The materials described in (b), (c) and (d) above shall be made available at the office of the Contractor, at all reasonable times, for inspection, audit, or reproduction, until the expiration of three (3) years from the date of final payment under this contract or such lesser time specified in Appendix M of the NASA Procurement Regulation, and for such longer period, if any, as is required by applicable statute, or by other clauses of this contract, or by (1) and (2) below:

(1) If this contract is completely or partially terminated, the records relating to the work terminated shall be made available for a period of three (3) years from the date of any resulting final settlement.

(2) Records which relate to appeals under the "Disputes" clause of this contract, or litigation, or the settlement of claims arising out of the performance of this contract, shall be made available until such appeals, litigations, or claims have been disposed of.

(f) The Contractor shall insert a clause containing all the provisions of this clause, including this paragraph (f), in all subcontracts exceeding $10,000 hereunder, except altered as necessary for proper identification of the contracting parties and the Contracting Officer under the Government prime contract.

(b) In the case of consolidated facilities contracts, facilities acquisition contracts and facilities use contracts, paragraph (b) of the clause should be amended to read:

(b) *Examination of Costs.* The Contractor shall maintain, and the Contracting Officer and his representative shall have the right to examine books, records, documents, and other evidence and accounting procedures and practices, sufficient to reflect properly (1) all direct and indirect costs of whatever nature claimed to have been incurred and anticipated to be incurred for the performance of this contract and (2) the use of, and charges for the use of, the facilities. Such right of examination shall include inspection at all reasonable times of the Contractor's plants, or such parts thereof, as may be engaged in the performance of this contract.

7.104-43 Subcontractor Cost or Pricing Data.

(a) The following clause shall be inserted in all negotiated contracts expected to exceed $100,000, except where the price is based on adequate price competition, established catalog or market prices of commercial items sold in substantial quantities to the general public, or prices set by law or regulation. The contracting officer may include this clause, with appropriate reduction in the dollar amounts included therein, in other negotiated contracts where a Certificate of Current Cost or Pricing Data is required (see 3.807-3(b)(iii)) in connection with initial pricing of the contract.

Subcontractor Cost or Pricing Data (August 1979)

(a) The Contractor shall require subcontractors hereunder to submit, actually or by specific identification in writing, cost or pricing data under the following circumstances: (i) prior to the award of any subcontract the amount of which is expected to exceed $100,000 when entered into, (ii) prior to the pricing of any subcontract modification which involves aggregate increases and/or decreases in costs plus applicable profits expected to exceed $100,000, except where the price is based on adequate price competition, established catalog or market prices of commercial items sold in substantial quantities to the general public, or prices set by law or regulation.

(b) The Contractor shall require subcontractors to certify, in substantially the same form as that used in the certificate by the Prime Contractor to the Government, that to the best of their knowledge and belief, the cost and pricing data submitted under (a) above is accurate, complete, and current as of the date of agreement on the negotiated price of the subcontract or subcontract change or modification.

(c) The Contractor shall insert the substance of this clause including this paragraph (c) in each subcontract hereunder which exceeds $100,000 when entered into except where the price thereof is based on adequate price competition, established catalog or market prices of commercial items sold in substantial quantities to the general public, or prices set by law or regulation. In each such excepted subcontract hereunder in excess of $100,000, the Contractor shall insert the substance of the following clause:

Subcontractor Cost or Pricing Data—Price Adjustments

(a) Paragraphs (b) and (c) of this clause shall become operative only with respect to any modification made pursuant to one or more provisions of this contract which involves aggregate increases and/or decreases in costs plus applicable profits expected to exceed $100,000. The requirements of this clause shall be limited to such contract modifications.

(b) The Contractor shall require subcontractors hereunder to submit, actually or by specific identification in writing, cost or pricing data under the following circumstances: (i) prior to award of any subcontract, the amount of which is expected to exceed $100,000 when entered into; (ii) prior to the pricing of any subcontract modification which involves aggregate increases and/or decreases in costs plus applicable profits expected to exceed $100,000; except where the price is based on adequate price competition, established catalog or market prices of commercial items sold in substantial quantities to the general public, or prices set by law or regulation.

(c) The Contractor shall require subcontractors to certify, in substantially the same form as that used in the certificate by the Prime Contractor to the Government, that to the best of their knowledge and belief the cost and pricing data submitted under (b) above is accurate, complete, and current as of the date of agreement on the negotiated price of the subcontract or subcontract change or modification.

(d) The Contractor shall insert the substance of this clause including this paragraph (d) in each subcontract hereunder which exceeds $100,000 when entered into.

(b) Insert the following clause in all contracts, both formally advertised and negotiated, which exceed $100,000 other than those described in (a) above:

Subcontractor

Cost or Pricing Data—Price Adjustments (August 1979)

(a) Paragraphs (b) and (c) of this clause shall become operative only with respect to any modification made pursuant to one or more provisions of this contract which involves aggregate increases and/or decreases in costs plus applicable profits expected to exceed $100,000. The requirements of this clause shall be limited to such modifications.

(b) The Contractor shall require subcontractors hereunder to submit cost or pricing data under the following circumstances: (i) prior to the award of any subcontract the amount of which is expected to exceed $100,000 when entered into; (ii) prior to the pricing of any subcontract modification which involves aggregate increases and/or decreases in costs plus applicable profits expected to exceed $100,000; except where the price is based on adequate price competition, established catalog or market prices of commercial items sold, in substantial quantities to the general public, or prices set by law or regulation.

(c) The Contractor shall require subcontractors to certify that to the best of their knowledge and belief the cost and pricing data submitted under (b) above is accurate, complete, and current as of the date of agreement on the negotiated price of the subcontract or subcontract change or modification.

(d) The Contractor shall insert the substance of this clause including this paragraph (d) in each subcontract which exceeds $100,000.

(e) The requirement for inclusion of the above clauses in contracts with foreign governments or agencies thereof

may be waived in exceptional cases by the Director of Procurement, who shall state in writing the reasons for such determination.

7.106–1 [Amended]

30. In Part 7, 7.106–1 the "Economic Price Adjustment-Basic Steel, Aluminum, Brass, Bronze or Copper Mill Products" clause date "(March 1977)" is amended to read "(August 1979)" and the reference "3.807–1(b)(2)" in next to the last sentence of paragraph (a) is amended to read "3.807–7(b)."

7.106–2 [Amended]

31. In Part 7, 7.106–2 the "Economic Price Adjustment-Nonstandard Steel Items" clause date "(March 1977)" is amended to read "(August 1979)" and the reference "3.807–1(b)(2)" in the first sentence of paragraph (a) is amended to read "3.807–7(b)."

7.106–3 [Amended]

32. In Part 7, 7.106–3 the "Economic Price Adjustment-Standard Supplies" clause date "(March 1977)" is amended to read "(August 1979)" and the reference in the third sentence of paragraph (a) is amended to read "3.807–7(b)."

7.106–4 [Amended]

33. In Part 7, 7.106–4 the "Economic Price Adjustment-Semistandard Supplies" clause date "(March 1977)" is amended to read "(August 1979)" and the reference "3.807–1(b)(2)" of paragraph (a) is amended to read "3.807–7(b)."

7.108–1 [Amended]

34. In Part 7, 7.108–1 the "Incentive Price Revision (Firm Target)" clause date "(January 1979)" is amended to read "(August 1979)."

7.108–1 [Amended]

35. In Part 7, 7.108–1(c) and (g)(ii) in the "Incentive Price Revision (Firm Target)" clause the phrase "DD Form 633–6" is amended to read "DD Form 633."

7.108–2 [Amended]

36. In Part 7, 7.108–2 the "Incentive Price Revision (Successive Targets)" clause date "(January 1979)" is amended to read "(August 1979)."

7.108–2 [Amended]

37. In Part 7, 7.108–2 paragraphs (c)(1)(ii), (c)(1)(iii) and (e) in the "Incentive Price Revision (Successive Targets): clause the phrase "DD Form 633–6: is amended to read "DD Form 633."

7.109–2 [Amended]

38. In Part 7, 7.109–2(b) the "Price Redetermination (Type A)" clause date "(January 1979)" is amended to read "(August 1979)."

7.109–2 [Amended]

39. In Part 7, 7.109–2 paragraphs (c)(i)(A) and (c)(ii) in the "Price Redetermination (Type A)" clause "DD Form 633–6" is amended to read "DD Form 633."

7.109–3 [Amended]

40. In Part 7, 7.109–3(b) the "Price Redetermination (Type E)" clause the date "(January 1979)" is amended to read "(August 1979)."

7.109–3 [Amended]

41. In Part 7, 7.109–3(b) the "Price Redetermination (Type E)" clause, the phrase "DD Form 633–6" in paragraph (b) of the clause is amended to read "DD Form 633."

42. In Part 7, 7.203–2 the text following the "Changes" clause is revised as follows:

7.203–2 *Changes.*

* * * * *

In the foregoing clause, the period of "sixty (60) days" within which any claim for adjustment must be asserted may be reduced to a period of not less than "thirty (30) days." In accordance with 10 U.S.C. 2306(f), prior to the pricing of any contract change or modification that is expected to exceed $100,000, except where the price is based on adequate price competition, established catalog or market prices of commercial items sold in substantial quantities to the general public, or prices set by law or regulation, the contracting officer shall require the contractor to furnish a Certificate of Current Cost or Pricing Data (see 3.807–6) and shall assure that the contract includes or is modified to include a defective pricing data clause (see 7.104–28).

43. In Part 7, 7.304–1 the text following the "Changes" clause is revised as follows:

7.304–1 *Changes.*

* * * * *

In the foregoing clause, the period of "sixty (60) days" within which any claim for adjustment must be asserted may be reduced to a period of not less than "thirty (30) days." In accordance with 10 U.S.C. 2306(f), prior to the pricing of any contract change or modification that is expected to exceed $100,000, except where the price is based on adequate price competition, established catalog or market prices of commercial items sold in substantial quantities to the general public, or prices set by law or regulation, the contracting officer shall require the contractor to furnish a Certificate of Current Cost or Pricing Data (see 3.807–6) and shall assure the contract includes or is modified to include a Defective Pricing Data clause (see 7.104–28).

44. In Part 7, 7.404–1 the text following the "Changes" clause is revised as follows:

7.404–1 *Changes.*

* * * * *

In the foregoing clause, the period of "sixty (60) days" within which any claim for adjustment must be asserted may be reduced to a period of not less than "thirty (30) days." In accordance with 10 U.S.C. 2306(f), prior to the pricing of any contract change or modification that is expected to exceed $100,000, except where the price is based on adequate price competition, established catalog or market prices of commercial items sold in substantial quantities to the general public, or prices set by law or regulation, the contracting officer shall require the contractor to furnish a Certificate of Current Cost or Pricing Data (see 3.807–6) and shall assure that the contract includes or is modified to include a Defective Pricing Data clause (see 7.104–28).

45. In Part 7, 7.453–1 the text following the "Changes" clause is revised as follows:

7.453–1 *Changes.*

* * * * *

In the foregoing clause, the period of "sixty (60) days" within which any claim for adjustment must be asserted may be reduced to a period of not less than "thirty (30) days." In accordance with 10 U.S.C. 2306(f), prior to the pricing of any contract change or modification that is expected to exceed $100,000, except where the price is based on adequate price competition, established catalog or market prices of commercial items sold in substantial quantities to the general public, or prices set by law or regulation, the contracting officer shall require the contractor to furnish a Certificate of Current Cost or Pricing Data (see 3.807–6) and shall assure that the contract includes or is modified to include a Defective Pricing Data clause (see 7.104–28).

46. In Part 7, 7.901–2 the text following the "Changes" clause is revised as follows:

7.901–2 *Changes.*

* * * * *

In the foregoing clause, the period of "thirty (30) days" within which any claim for adjustment must be asserted may be increased to a period of not more than "sixty (60) days." In accordance with 10 U.S.C. 2306(f), prior to the pricing of any contract change or modification that is expected to exceed $100,000, except where the price is based on adequate price competition, established catalog or market prices of commercial items sold in substantial quantities to the general public, or prices set by law or regulation, the contracting officer shall require the contractor to furnish a Certificate of Current Cost or Pricing Data (see 3.807–6) and shall assure that the contract includes or is

modified to include a Defective Pricing Data clause (see 7.104–28).

PART 8—TERMINATION OF CONTRACTS

8.206 [Amended]

47. In Part 8, 8.206(c)(xv), the reference "3.807–3(i)" is amended to read "3.807–6(f)."

PART 13—GOVERNMENT PROPERTY

13.212–1 [Amended]

48. In Part 13, 13.212–1(ii), the reference "3.807–1(b)" is amended to read "3.807–7(b)."

49. In Part 13, 13.702, the introductory text of paragraph (b) is revised as follows:

13.702 *Government Property Clauses for Fixed-Price Contracts.*

* * * * *

(b) Contracts Requiring the Furnishing of Cost or Pricing Data. In negotiated fixed-price contracts for which the price is not based on (i) adequate price competition, (ii) established catalog or market prices of commercial items sold in substantial quantities to the general public (see 3.807–7(b)), or (iii) prices set by law or regulation, substitute the following for paragraph (g) of the clause in (a) above:

PART 15—CONTRACT COST PRINCIPLES AND PROCEDURES

15.204 [Amended]

50. In Part 15, 15.204(c) the reference "3.807–10(b)" in the last sentence is amended to read "3.807–9(d)."

51. In Part 15, 15.205–22(e) (i) and (ii) are revised as follows:

15.205–22 *Material Cost.*

* * * * *

(e) * * *

(i) it is or is based on an "established catalog or market price of commercial items sold in substantial quantities to the general public" in accordance with 3.807–7(b); or

(ii) it is the result of "adequate price competition" in accordance with 3.807–7(a), and is the price at which an award was made to the affiliated organization after obtaining quotations on an equal basis from such organization and one or more outside sources which normally produce the item or its equivalent in significant quantity:

* * * * *

PART 16—PROCUREMENT FORMS

52. In Part 16, Table of Contents 16.201–7 through 16.204 are revised as follows:

16.201–7 General Provisions—Cost-Reimbursement Research and Development Contracts With Educational or Non-profit Institutions (NASA Form 419) 16-2.2
16.201–8 General Provisions—Facilities Contracts (NASA Form 746, 747, and 748) 16-2.2
16.201–9 General Provisions—Time and Material and Labor Hour Contracts 16-2.2
16.202 Contract Pricing Proposal Form 16-2.2
16.202–1 Special Forms 16-2.2
16.202–2 Contract Pricing Proposal Supporting Schedules 16-2.2A
16.202–3 Contract Facilities Capital and Cost of Money 16-2.2A
16.203 [Reserved] 16-2.2A
16.204 Justification for Authority to Negotiate (NASA Form 543) 16-2.2A

16.001 [Amended]

53. In Part 16, 16.001(c) the date "(April 1968)" of the Department of Defense Form 633 is amended to read "(April 1979)" and Department of Defense Forms 633–1 through 633–6 are deleted.

54. In Part 16, 16.202 through 16.202–3 are revised as follows:

16.202 *Contract Pricing Proposal Form.*

16.202 Contract Pricing Proposal Form.

(a) DD Form 633 (NASA Edition), or DD Form 633–7 (NASA Edition) shall be used except for negotiated final overhead rates whenever cost or pricing data (see 3.807–3) is required in connection with the pricing of contracts, subcontracts, and changes or modifications to contracts and subcontracts; or, in accordance with 3.807–3(i) whenever exemption from such requirements for contracts or subcontracts is claimed by reason of established catalog or market price (see 3.807–7(b)) or price set by law or regulation. The "Cost Elements" and estimates in DD Form 633 may be presented in a different format acceptable to the contracting officer, when the contractor's or subcontractor's accounting system makes the use of the prescribed format impracticable or when required for a more effective and efficient presentation of cost or pricing information. In such cases, a signed DD Form 633 is required to be submitted and fully accomplished as to all items except that the "Cost Elements" and the "Proposed Contract Estimate" may be accomplished by making reference to the contractor's format.

(b) DD Form 783 (Royalty Report (Foreign and Domestic)) is approved for use as the separate schedule required by DD Form 633.

16.202–1 Special Forms. The following forms may be used as appropriate:

(i) DD Form 633–7 (Claim For Exemption From Submission of Certified Cost or Pricing Data).

(ii) DD Form 783 (Royalty Report).

16.202–2 Contract Pricing Proposal Supporting Schedules may be devised by the contracting officer to require such supporting data to the foregoing forms as is considered necessary and reasonable through knowledge of industry; company or commodity practices.

16.202–3 Contract Facilities Capital and Cost of Money. The DD Form 1861 shall be used, in accordance with Part 3, Subpart 13, to compute the cost of money for facilities capital employed on a specific contract. Completion of Lines 7 and 8 is optional for NASA contracts.

PART 23—SUBCONTRACTING POLICIES AND PROCEDURES

55. In Part 23, Table of Contents 23.102–3 through 23.150 are revised as follows:

23.102–3 Special Reviews of Approved Systems 23-1:3
23.102–4 Review of Procurement Systems When Approval is Withheld or Withdrawn 23-1:3
23.103 Extent of Review 23-1:3
23.104 Contractor Procurement System Review Boards 23-1:4
23.105 Granting, Continuing, Withholding, and Withdrawing Approval 23-1:5
23.106 Distribution of Reports, Schedules and Notifications 23-1:7
23.107 Disclosure of Approval Status of Contractor's Procurement Systems 23-1:8
23.108 Surveillance of the Contractor's Approved Procurement System 23-1:8
23.150 Contractor Procurement System Reviews Conducted by the Department of Defense (DoD) 23-1:9

23.103 [Amended]

56. In Part 23, 23.103(a)(ii) the second reference "3.807–4" at the end of the sentence is amended to read "3.807–6."

23.202 [Amended]

57. In Part 23, 23.202(b)(ii) the reference "3.807–10(b)" is amended to read "3.807–9(d)."

58. In Part 23, 23.202(d) is added as follows:

23.202 *Consent to Subcontracts.*

* * * * *

(d) In consenting to cost reimbursement subcontracts, the contracting officer must ensure that fees under such subcontracts never exceed the fees identified in 3.405–6(c)(2).(Also see 3.807–9(e).)

APPENDIX E—CONTRACT FINANCING

59. In Appendix E, Table of Contents E.511–5 and E.511–6 are revised as follows:

E.511–5 Unusual Percentages E-5.6A
E.511–6 Other Protective Provisions E-5.6A

E.505 [Amended]

60. In Appendix E, E.505 in the last sentence of the first paragraph the title "Assistant Administrator for Procurement" is amended to read "Director of Procurement."

E.511–3 [Amended]

61. In Appendix E, E.511–3 the reference "(3.807–2(c))" near the end of

the last sentence is amended to read "(see 3.807-1(a) and 3.807-2(b))."

[FR Doc. 80-19567 Filed 6-27-80; 8:45 am]

BILLING CODE 7510-01-M

FEDERAL MARITIME COMMISSION

46 CFR Part 502

[General Order No. 16, Amendment 35, Docket No. 80-15]

Rules of Practice and Procedure

AGENCY: Federal Maritime Commission.

ACTION: Final rules.

SUMMARY: The Federal Maritime Commission has revised Rule 67 of the Commission's Rules of Practice and Procedure (46 CFR 502.67). Rule 67, relating to proceedings under section 3(a) of the Intercoastal Shipping Act, 1933, sets out the prescribed procedures relating to any change in rates, fares or charges in the tariffs of ocean carriers in the domestic trades.

The originally proposed revision limited the application of certain provisions of the rule to vessel operating common carriers, and required carriers to file testimony, workpapers and exhibits with the relevant State Attorney Generals on the same day that they are filed with the Commission. After reviewing comments submitted by Sea-Land Service, Inc. the Commission made, in addition, the following changes: Rule 67(d)(2) is revised to require the parties to serve on each other only a prehearing statement instead of testimony, exhibits and workpapers. "Administrative Law Judge" is changed to "presiding officer." The presiding officer in Rule 67(d)(2) cases is required to hold a prehearing conference. Rule 67(a)(3) is amended to require all persons wishing to inspect workpapers underlying financial and operating data filed in connection with a proposed rate change to submit a certification. Finally, Rule 67 is amended to require a protestant to file his protest with the tariff publishing officer of the carrier.

EFFECTIVE DATE: June 30, 1980.

FOR FURTHER INFORMATION CONTACT: Francis C. Hurney, Secretary, Federal Maritime Commission, 1100 L Street, N.W., Washington, D.C. 20573, (202) 523-5725.

SUPPLEMENTARY INFORMATION: This proceeding was initiated by a Notice of Proposed Rulemaking published in the Federal Register on March 24, 1980; 45 FR 18991. The purpose of the proceeding was to amend Rule 67 (46 CFR 502.67) to limit its applicability to vessel operating carriers and to clarify certain other aspects of the rule. Only one party, Sea-Land Service, Inc., submitted comments. It directed its comments toward that part of the proposed rule that deals with less than general rate increases and the increases of NVO's. Sea-Land's comments on the proposed rule were carefully considered by the Commission and adopted in part.

1. *Section 502.67(d)(2).* Sea-Land proposed that the following procedures be followed for non-general rate increases or decreases and non-vessel operating common carrier rate changes: The carrier should submit his direct testimony, exhibits and workpapers within 20 days of the Order of Investigation; Hearing Counsel and all protestants should simultaneously serve their direct testimony, exhibits and workpapers within 30 days of the Order. A prehearing conference should be convened to help simplify and identify the issues and otherwise prepare for resolution of the case of holding of a hearing. Sea-Land pointed out that an administrative law judge need not preside over the case and suggested that either an individual commissioner, an administrative law judge, or a designated employee of the Commission preside. Within 35 days of the Order, the conference chairman should issue an order and, if necessary, set a date for a hearing before an administrative law judge, to commence no later than 50 days after the Order of Investigation. Sea-Land also pointed out that in cases where the carrier only filed the financial data required by G.O. 11, the Commission might not want to bind Hearing Counsel, and all protestants to simultaneous filing of direct cases with the carrier, so it would be best to have the conference soon after the Order. Sea-Land expressed concern that requirements established by general rules might work unfairness in particular cases.

The Commission agrees with Sea-Land that a prehearing conference can be very useful and that such a conference need not be presided over by an administrative law judge. It also agrees with Sea-Land on the danger of applying inflexible general rules to particular cases. In fact, the Commission feels that both the proposed rule and Sea-Land's proposal as to exchange of direct testimony, exhibits and workpapers are too inflexible and might work unfairness in particular cases. Therefore, the Commission has revised Rule 67(d)(2) to require the carrier, Hearing Counsel, and all protestants to simultaneously serve on each other only a prehearing statement instead of direct testimony, exhibits and workpapers. After the service of these statements the presiding officer shall, at his discretion, hold a prehearing conference to consider, among other things, ordering the exchange of written testimony and exhibits. The term "Administrative Law Judge" is changed to "presiding officer" wherever it appears. Rule 25 of the Commission's Rules of Practice and Procedure (46 CFR 502.25) defines "presiding officer" to include:

(a) any one or more of the members of the Commission (not including the Commission when sitting as such), (b) one or more Administrative Law Judges or (c) one or more officers authorized by the Commission to conduct nonadjudicatory proceedings when duly designated to preside at such proceedings.

The fifty (50) day limitation on the commencement of hearings suggested by Sea-Land is rejected. Section 3(b) of the Intercoastal Shipping Act, 1933 already requires that hearings be completed within sixty (60) days. There appears to be no reason to impose an additional requirement in the Commission's Rules of Practice and Procedure.

2. *Section 502.67(a)(3).* Sea-Land proposed that whenever a carrier is required to provide financial data to any interested person in connection with a proposed rate change, that person should be required to submit a certification that he will use the material only for evaluating the rate change and identifying all those to whom the data will be made available. Sea-Land was concerned with the inconsistency between G.O. 11 and Rule 67 in cases where G.O. 11 requires carriers to make financial data available to interested persons and Rule 67 does not require submission of a certification.

The Commission agrees that there is an inconsistency in the rules and has amended 502.67(a)(3) to require all persons wishing to inspect workpapers underlying financial and operating data filed in connection with a proposed rate change to submit a certification.

3. *Definition of the term "file".* Sea-Land claims that "file" is a term of art defined in 46 CFR 531.2(i) and that amendments should be made to the rules to reflect the current, accurate meaning of the word. The Commission does not agree that any such amendment is necessary. First, the definition of a term in one order does not govern that term's meaning in other orders or rules. Second, the term "file" as used in both 46 CFR 531.2(i) and Rule 67 implies receipt.

4. *Filing protest on the carrier.* Sea-Land pointed out that present rules only require a protestant to file his protest

with a carrier. The rule would allow the protestant to leave the protest at an office which was not aware of the Commission's requirements. Instead, Sea-Land proposes, the protestant should be required to file his protest with the tariff publishing officer of the carrier. The Commission agrees with this proposal and has amended the rule accordingly.

Therefore, pursuant to section 4 of the Administrative Procedure Act (5 U.S.C. § 553), sections 2 and 3 of the Intercoastal Shipping Act, 1933 (46 U.S.C. 844, 845) and sections 21, 27, and 43 of the Shipping Act, 1916 (46 U.S.C. 820, 826, 841(a)), Part 502 of Title 46, Code of Federal Regulations, is amended as set forth hereinafter.

Section 502.67 is revised as follows:

§ 502.67 Proceedings under section 3(a) of the Intercoastal Shipping Act, 1933.

(a)(1)(i) The term "general rate increase" means any change in rates, fares, or charges which will (A) result in an increase in not less than 50 per centum of the total rate, fare, or charge items in the tariffs per trade of any common carrier by water in intercoastal commerce; and (B) directly result in an increase in gross revenues of such carrier for the particular trade of not less than 3 per centum.

(ii) The term "general rate decrease" means any change in rates, fares, or charges which will (A) result in a decrease in not less than 50 per centum of the total, rate, fare, or charge items in the tariffs per trade of any common carrier by water in the intercoastal commerce; and (B) directly result in a decrease in gross revenue of such carrier for the particular trade of not less than 3 per centum.

(2) No general rate increase or decrease shall take effect before the close of the sixtieth day after the day it is posted and filed with the Commission. A vessel operating common carrier (VOCC) shall file, under oath, concurrently with any general rate increase or decrease testimony and exhibits of such composition, scope and format that they will serve as the VOCC's entire direct case in the event the matter is set for formal investigation, together with all underlying workpapers used in the preparation of the testimony and exhibits. The VOCC shall also certify that copies of testimony, exhibits and underlying workpapers have been filed simultaneously with the Attorney General of every non-contiguous State, Commonwealth, possession or Territory having ports in the relevant trade that are served by the VOCC. The contents of underlying workpapers served on attorneys general pursuant to this paragraph are to be considered confidential and are not to be disclosed to members of the public except to the extent specifically authorized by an order of the Commission or a presiding officer. A copy of the testimony and exhibits shall be made available at every port in the trade at the offices of the VOCC or its agent during usual business hours for inspection and copying by any person.

(3) Workpapers underlying financial and operating data filed in connection with proposed rate changes shall be made available promptly by the carrier to all persons requesting them for inspection and copying upon the submission of the following certification, under oath, to the carrier:

Certification

I, (Name and title if applicable) ———, of (Full name of company or entity), having been duly sworn, certify that the underlying workpapers requested from (Name of carrier), will be used solely in connection with protests related to and proceedings resulting from (Name of carrier) ——— 's rate (increase) (decrease) scheduled to become effective (Date) —— and that their contents will not be disclosed to any person who has not signed, under oath, a certification in the form prescribed, which has been filed with the Carrier, unless public disclosure is specifically authorized by an order of the Commission or the presiding officer.

Signature: ———.

Date: ———.

Signed and Sworn before me this —— Day of ———.

Notary Public: ———.

My Commission expires: ———.

(4) Failure by the VOCC to meet the service and filing requirements of paragraph (a)(2) may result in rejection of the tariff matter. Such rejection will take place within three work days after the defect is discovered.

(b)(1) Protests against a proposed general rate increase or decrease made pursuant to section 3 of the Intercoastal Shipping Act, 1933, may be made by letter and shall be filed with the Director, Bureau of Ocean Commerce Regulation and the tariff publishing officer of the carrier no later than thirty (30) days prior to the proposed effective date of the proposed changes. In the event the due date for protests falls on a Saturday, Sunday or national legal holiday, protest must be filed with the Director, Bureau of Ocean Commerce Regulation and the carrier no later than the last business day preceding the weekend or holiday. Persons filing protests pursuant to this section shall be made parties to any docketed proceeding involving the matter protested, provided that the issues raised in the protest are pertinent to the issues set forth in the order of investigation. Protests shall include:

(i) Identification of the tariff in question;

(ii) Grounds for opposition to the change;

(iii) Identification of any specific areas of the VOCC's testimony, exhibits, or underlying data that are in dispute and a statement of position on each area in dispute (VOCC general rate increases or decreases only);

(iv) Specific reasons why a hearing is necessary to resolve the issues in dispute;

(v) Any requests for additional carrier data;

(vi) Identification of any witnesses that protestant would produce at a hearing, a summary of their testimony and identification of documents that protestant would offer in evidence; and

(vii) A subscription and verification.

(2) Protests against other proposed changes in tariffs made pursuant to section 3 of the Intercoastal Shipping Act, 1933, shall be filed no later than twenty (20) days prior to the proposed effective date of the change. The provisions of paragraph (b)(1) relating to the form, place and manner of filing protests against a proposed general rate increase or decrease shall be applicable to protests against other proposed tariff changes.

(c) Replies to protests shall conform to the requirements of § 502.74 (Rule 74).

(d)(1) In the event the general rate increase or decrease of a VOCC is made subject to a docketed proceeding, Hearing Counsel, the VOCC and all protestants shall serve, under oath, testimony and exhibits constituting their direct case, together with underlying workpapers on all parties and lodge copies of testimony and exhibits with the presiding officer no later than seven (7) days after the tariff matter takes effect or, in the case of suspended matter, seven (7) days after the matter would have otherwise gone into effect.

(2) If other proposed tariff changes made pursuant to section 3 of the Intercoastal Shippinig Act, 1933 are made subject to a docketed proceeding, the carrier, Hearing Counsel and all protestants will simultaneously serve on all parties and lodge with the presiding officer prehearing statements as specified in paragraph (f)(1) of this section no later than seven (7) days after the tariff matter takes effect, or in the case of suspended matter, seven (7) days after the matter would have othewise gone into effect.

(e)(1) Subsequent to the exchange of prehearing statements by all parties, the presiding officer shall, at his discretion,

direct all parties to attend a prehearing conference to consider:

(i) Simplification of issues;

(ii) Identification of issues which can be resolved readily on the basis of documents, admissions of fact, or stipulations;

(iii) Identification of any issues which require evidentiary hearing;

(iv) Limitation of witnesses and areas of cross-examination should an evidentiary hearing be necessary;

(v) Requests for subpoenas; and

(vi) Other matters which may aid in the disposition of the hearing including but not limited to the exchange of written testimony and exhibits.

(2) After considering the procedural recommendations of the parties, the presiding officer shall limit the issues to the extent possible and establish a procedure for their resolution.

(3) The presiding officer shall, whenever feasible, rule orally upon the record on matters presented before him.

(f)(1) It shall be the duty of every party to file a prehearing statement on a date specified by the presiding officer, but in any event no later than the date of the prehearing conference.

(2) A prehearing statement shall state the name of the party or parties on whose behalf if is presented and briefly set forth:

(i) Identification of issues which can be resolved readily on the basis of documents, admisssions of fact, or stipulations;

(ii) Identification of any issues which require evidentiary hearing, together with the reasons why these issues cannot be resolved readily on the basis of documents, admissions of facts stipulations or an alternative procedure;

(iii) Requests for cross-examination of the direct written testimony of specified witnesses, the subjects of such cross-examination and the reasons why alternatives to cross-examination are not feasible;

(iv) Requests for additional, specified witnesses and documents, together with the reasons why the record would be deficient in the absence of this evidence; and

(v) Procedural suggestions that would aid in the timely disposition of the proceeding.

(g) The provisions of this section are designed to enable the presiding officer to complete a hearing within sixty (60) days after the proposed effective date of the tariff changes and submit an initial decision to the Commission within one hundred twenty (120) days pursuant to section 3(b) of the Intercoastal Shipping Act, 1933. The presiding officer may employ any other provision of the Commission's Rules of Practice and Procedure, not inconsistent with this section, in order to meet this objective. Exceptions to the decision of the presiding officer, filed pursuant to section 502.227 (Rule 227) shall be served no later than fifteen (15) days after date of service of the initial decision. Replies thereto shall be served no later than ten (10) days after the date of service of exceptions. In the absence of exceptions, the decision of the presiding officer shall be final within 30 days from the date of service unless within that period a determination to review is made in accordance with the procedures outlined in § 502.227 of this part.

(h) Intervention by persons other than protestants ordinarily shall not be granted. In the event intervention of such persons is granted, the presiding officer or the Commission may attach such conditions or limitations as are deemed necessary to effectuate the purpose of this section. [Rule 67].

By the Commission.

Francis C. Hurney,

Secretary.

[FR Doc. 80-19598 Filed 6-27-80; 8:45 am]

BILLING CODE 6730-01-M

FEDERAL COMMUNICATIONS COMMISSION

47 CFR Part 73

[BC Docket No. 79-343; RM-3482; RM-3488; RM-3550; RM-3552]

FM Broadcast Stations in Greenwood, Booneville, and Waldron, Ark.; Changes Made in Table of Assignments

AGENCY: Federal Communications Commission.

ACTION: Final rule (Report and Order).

SUMMARY: Action taken herein assigns Class A FM channels to Greenwood, Booneville and Waldron, Arkansas, as first FM assignments, in response to petitions filed by Margaret Crisler, Charles Massey, B & L Communications, and Great Scott Broadcasting Corp. The assignments can provide Greenwood, Booneville and Waldron with their first local FM broadcast service.

EFFECTIVE DATE: August 4, 1980.

ADDRESSES: Federal Communications Commission, Washington, D.C. 20554.

FOR FURTHER INFORMATION CONTACT: Mildred B. Nesterak, Broadcast Bureau, (202) 632-7792.

SUPPLEMENTARY INFORMATION:

In the matter of amendment of § 73.202(b), *Table of Assignments,* FM Broadcast Stations. (Greenwood, Booneville and Waldron, Arkansas), BC Docket No. 79-343, RM-3482, RM-3488, RM-3550, RM-3552.

Report and Order—Proceeding Terminated

Adopted: June 18, 1980.

Released: June 26, 1980.

1. The Commission has under consideration its *Notice of Proposed Rule Making,* adopted December 19, 1979, 45 FR 1919, proposing the assignment of Channel 292A to Greenwood, Arkansas, in response to a petition filed by Margaret Crisler ("Crisler"). Three other petitions which are in conflict with the above proposal or with each other have also been incorporated into this proceeding. They are: (1) The assignment of Channel 292A to Booneville, Arkansas, proposed by B & L Communications ("B & L"); (2) the assignment of Channel 221A to Booneville, Arkansas, proposed by Charles Massey ("Massey"); and (3) the assignment of Channel 221A to Waldron, Arkansas, proposed by Great Scott Broadcasting Corp. ("Great Scott").[1] Crisler and Massey filed comments in which they reaffirmed their interest in filing for their respective proposed channels, if assigned.

2. In comments, Crisler showed that the conflict between the proposed channels can be resolved by assigning Channel 292A to Greenwood, Channel 221A to Booneville, and Channel 276A, in lieu of the requested Channel 221A, to Waldron. A staff study has verified these assignments to each of the communities.

3. In support of their proposals, petitioners have submitted sufficient information with respect to the need for a first FM channel assignment to their respective communities. Greenwood would be provided with its first fulltime local aural service and Booneville and Waldron would receive their first local aural broadcast service. Even though B & L Communications requested Channel 292A, it has not shown that Booneville should receive two assignments at the expense of a first FM assignment to Greenwood. As indicated, Booneville will be assigned Channel 221A and B & L Communications can apply for that channel instead. The channel assignments can be made in conformity with the minimum distance separation requirements and without affecting any existing assignments. The assignment to

[1] Although they deal with separate communities, the proposals are mutually exclusive since the communities, Greenwood and Booneville, are only 20 miles apart, whereas 105 kilometers (65 miles) are required. The same holds true for the communities of Booneville and Waldron.

Waldron would require siting 6.4 kilometers (4 miles) southwest of Waldron.

4. In view of the foregoing, it is ordered, That effective August 4, 1980, the FM Table of Assignments, § 73.202(b) of the Commission's rules, is amended with respect to the following communities listed below:

City and Channel No.

Booneville, Arkansas—221A
Greenwood, Arkansas—292A
Waldron, Arkansas—276A

5. Authority for the action taken herein is contained in Sections 4(i), 5(d)(1), 303(g) and (r) and 307(b) of the Communications Act of 1934, as amended, and § 0.281 of the Commission's rules.

6. It is further ordered, that this proceeding is terminated.

7. For further information concerning this proceeding, contact Mildred B. Nesterak, Broadcast Bureau, (202) 632-7792.

Federal Communications Commission.

(Secs. 4, 5, 303, 48 Stat., as amended, 1066, 1068, 1082; (47 U.S.C. 154, 155, 303))

Henry L. Baumann,

Chief, Policy and Rules Division, Broadcast Bureau.

[FR Doc. 80-19588 Filed 6-27-80; 8:45 am]

BILLING CODE 6712-01-M

DEPARTMENT OF TRANSPORTATION

Research and Special Programs Administration and Materials Transportation Bureau

49 CFR Parts 171, 172, 173, 174, 176, and 177

[Dockets Nos. HM-126A, 145B, and 171; Amdts. Nos. 171-153, 172-58]

Identification Numbers, Harzardous Substances, International Descriptions

AGENCY: Materials Transportation Bureau (MTB), Research and Special Programs Administration, Department of Transportation (DOT).

ACTION: Postponement of voluntary compliance date; notice of public hearing and request for comments.

SUMMARY: This action postpones the voluntary compliance data for display of identification numbers on placards and use of the Optional Hazardous Materials Table. Petitions for reconsideration have been received from the Association of American Railroads (AAR) and the Southern Railway System (Southern) pertaining to these matters, thereby compelling MTB to postpone voluntary compliance with those new regulations that impact on regulations presently in effect. A public hearing will be held on July 31, 1980, to receive comments on the petitions for reconsideration, including those portions dealing with hazardous substances.

DATES: The Effective Date statement, published in the Federal Register for Amendment No. 172-58 *et al.* (45 FR 34560) on May 22, 1980, is changed to read "November 20, 1980, unless otherwise specified in the regulations adopted under this rulemaking. Except for descriptions specified in § 172.102 and the display of identification numbers on placards (§ 172.334), shipments may be prepared, offered for transportation, and transported in accordance with these amendments beginning July 1, 1980."

A public hearing will be held on July 31, 1980, beginning at 9:00 a.m.

Written comments must be received on or before August 12, 1980.

ADDRESSES: The public hearing will be held in Room 7A of the Federal Aviation Administration building (FOB 10A) located at 800 Independence Avenue, S.W., Washington, D.C.

Address comments to: Dockets Branch, Materials Transportation Bureau, U.S. Department of Transportation, Washington, D.C. 20590. It is requested that the docket number be identified and that five copies be submitted. The Dockets Branch is located in Room 8426 of the Nassif Building, 400 7th Street, S.W., Washington, D.C. Office hours are 8:30 a.m. to 5:00 p.m., Monday through Friday. Telephone (202) 426-3148.

FOR FURTHER INFORMATION CONTACT: L. Metcalfe (202-426-0656) or Delmer Billings (202-426-2075), Standards Division, Office of Hazardous Materials Regulation, Materials, Transportation Bureau, Department of Transportation, Washington, D.C. 20590. Office hours are 8:00 a.m. to 4:30 p.m., Eastern Time, Monday through Friday.

SUPPLEMENTARY INFORMATION: On May 22, 1980, final regulations were published in the Federal Register (45 FR 34560) under Dockets HM-118, 126A, 126B, 145A, 145B, 159, and 171. Of the six petitions for reconsideration received, MTB believes that two petitions raise matters of major significance warranting further public participation before any action is taken concerning their disposition. These petitions were received from the Association of American Railroads (AAR) and the Southern Railway Company and its affiliated rail carriers commonly referred to as Southern Railway System (Southern). In order to afford full public review, the MTB is providing in this publication a complete reproduction of the text of the AAR petition and the principal statements of Southern that are in addition to those of the AAR. The AAR statement is quoted as follows:

This petition is submitted by the Association of American Railroads (AAR) on behalf of its member railroads. The AAR seeks reconsideration of the regulations published by the Materials Transportation Bureau's Research and Special Programs Administration (MTB), Department of Transportation, at 45 FR 34560 (1980). The AAR and its member railroads have a substantial interest in regulations affecting the transportation of hazardous materials.

The rules promulgated by the MTB represent the consolidation of several rulemaking proceedings which vary in degree of controversy. The AAR and individual member railroads have participated in all of these proceedings by the filing of comments in response to published notices. Two of the proceedings—HM-145A and HM-145B—represent MTB's exercise of its rulemaking authority to adopt rules which will accommodate the Congressionally mandated program for the handling of hazardous wastes under the Resource Conservation and Recovery Act (RCRA) and the Environmental Protection Agency's hazardous substance program established pursuant to Section 311 of the Federal Water Pollution Control Act. The AAR is conscious of the importance of implementing the RCRA regulations and the hazardous substances program and compliments the MTB on the manner in which it has structured the regulations in this regard. There are, however, several important deficiencies in MTB's regulations which must be corrected.

As will be discussed more fully, the railroads take sharp issue with several aspects of the regulations adopted pursuant to Dockets HM-126 and HM-171. In those two proceedings, the Bureau has adopted rules which seriously undermine safety programs and impose significant and unnecessary burdens on the railroads. The Optional Materials Table, fashioned after the Inter-Governmental Maritime Consultative Organization (IMCO) Code for use by shippers in domestic movements, is particularly onerous and must be withdrawn. Additionally, the MTB would permit the use of an alternate form of placards on hazardous materials cars which destroys the integrity of the current placard system. This new placard system was adopted without notice and without opportunity to address the utility of the current format of the various placards. This action by the MTB is totally unreasonable and must be reversed.

In the preamble to the regulations (45 FR 34560, 1980) MTB announced that "Shipments may be prepared, offered for transportation, and transported in accordance with these amendments beginning July 1, 1980." The AAR strongly urges that the MTB issue a Federal Register notice withdrawing that statement. The rules as promulgated make significant and substantial changes which cannot be implemented by the railroads on such short notice. While shippers may find it possible to use the Optional Hazardous Materials Table prior to November 20, 1980, the railroads cannot complete by that time

the instructions and training programs which would be necessary to enable railroad employees to comply with the regulations associated with the use of the Optional Hazardous Materials Table. Similarly, while shippers may be in a position to alter existing placards or to paste labels with UN numbers over the wording on existing placards, the significant burdens resulting from the use of an additional placarding system fall on the railroads. In addition to training programs, the MTB's regulations must be published in the Bureau of Explosives Tariff before the railroads can enforce regulations as a part of the contract for the carriage of commodities designated as hazardous materials. It is anomalous for MTB to admit "it will take some time for the emergency services to become fully familiar" with the new system (45 FR 34564, 1980) and at the same time allow use of the new system almost immediately. The MTB's regulations, which represent drastic changes, should not be offered as alternatives prior to the effective date of the regulations.

49 CFR 171.8

As an essential element in the implementation of the EPA's hazardous substances program, it was necessary that DOT adopt regulations requiring that shippers advise carriers when they are tendering a reportable quantity of a hazardous substance and to specifically advise the carrier of the precise identification of that commodity. For the most part the MTB's regulations accomplish this purpose. Positive steps taken include the inclusion of all hazardous substances in the Hazardous Materials Table, the addition of "E" as a designator denoting an environmentally hazardous substance, and the use of "RQ" as an indicator of a reportable quantity of a hazardous substance. Furthermore, while § 171.17, which provides for hazardous substance discharge notifications, does not define what a hazardous substance discharge is, the preamble clearly supports the proposition that § 171.17 and § 171.8 be read together (45 FR 34570, 1980). As a result, notification of a hazardous substance discharge is required only when a reportable quantity is discharged. This result is consistent with EPA regulations and thereby supports a coherent regulatory program.

In one particular respect the definition of the term "hazardous substance" is too narrow and could potentially expose the railroads to liability. As promulgated, 49 CFR 171.8 defines a hazardous substance as "a quantity of a material offered for transportation in one package, or transport vehicle when the material is not packaged", that equals or exceeds the reportable quantity for the material. According to this definition, a trailer offered in TOFC service loaded with 55 gallon drums of a hazardous material does not contain a hazardous substance if one drum does not contain the reportable quantity, even though in the aggregate the trailer contains far in excess of the reportable quantity. A spill from such a trailer could result in an environmental disaster and a railroad could be subject to civil suits by parties affected by such a spill even though the railroad did not know it was transporting a hazardous substance. The definition must be modified to require shippers to notify transporters when several packages of a hazardous material are tendered in one transport vehicle, if in the aggregate there is an amount equal to or exceeding a reportable quantity of a hazardous substance. The AAR suggests that a "hazardous substance" be redefined to mean a quantity of material offered for transportation in one or more packages, or one transport vehicle when the material is not packaged.

49 CFR 172.102

The AAR strongly objects to the adoption of the "Optional Hazardous Material Table" in § 172.102. The MTB has created two optional and interchangeable commodity tables without any attempt to reconcile the differences. The chaotic effect of maintaining two hazardous materials lists to be available at the whim of the shippers is totally unacceptable to the railroad industry. The Optional Table will be counterproductive from a safety standpoint because in actual practice, the presence of the Optional Table will require use of both tables and increase the potential for error. The Optional Table not only requires verification and cross-referencing with the § 171.101 Hazardous Materials Table, but also creates havoc for rail personnel seeking correct train placement and a correlation between shipping papers and car placards.

Use of the Optional Table and the IMCO hazard classification numbers will also result in significant operating burdens on the railroads which cannot be justified on the basis of the record in this proceeding. Some commodities classed as hazardous under the IMCO system are presently classed as ORME under existing DOT regulations. Thus, if a shipper elected to use the Optional Table for these commodities, placarding and special car handling and placement would be required, while under the § 172.101 Hazardous Materials Table placarding and special car handling would not be required. In addition, many commodities now classed as "combustible" under the § 172.101 Hazardous Materials Table would be classed as "flammable" under the IMCO system. Flammable commodities require special handling, combustible commodities do not. The MTB cannot justify imposing the additional expense and operating burdens that will result from use of the Optional Table. The Optional Table for the first time assigns certain commodities to a hazard class and changes have been made without the required data, safety experience, or independent analyses of commodity characteristics.

49 CFR 172.334 and 172.338

Section 172.334 permits the display of United Nations (UN) identification numbers on the placard specified for the hazard material contained in the car. This section provides for a new series of placards as an alternative to displaying the identification number on an orange panel in the proximity of the placard.* [* MTB has excluded "poison gas" and "radioactive" placards from this alternative system. At a minimum, the exclusion should extend to "Explosive A" placards.] These new placards would not contain the wording currently used to define the particular hazard class. MTB would replace the easily understandable wording presently found on placards with an obtuse numbering system which means nothing to most people and conveys no immediate information. This drastic action is being taken without the thorough discussion or evaluation necessary to ensure that the change will protect public safety. The alternative placard system has been adopted without providing the public with notice or an opportunity to comment, as required by the Administrative Procedure Act, and must be withdrawn.

It is unconscionable for the MTB to permit the alternative system on the basis of a record which contains no discussion of the effect of the elimination of the wording currently found on MTB mandated placards. The existing placards were adopted after an exhaustive examination of the alternatives. In Docket HM-103, the Department of Transportation proposed a series of placards in a Notice of Proposed Rulemaking published in the Federal Register of June 24, 1974 (39 FR 33964). The Department of Transportation proposed that a 2-digit numeric identifier be included on placards as the mechanism for conveying the hazard and multiple hazards of the materials. Following the receipt of comments by shippers and carriers, the Department of Transportation, by notice in the Federal Register on June 25, 1975 (40 FR 26687), terminated its proposals pertaining to the use of a 2-digit number to identify the hazards of materials during transportation. In the final regulations adopted in HM-103, the MTB included as an integral part of its placard system the requirement that specific wording identifying the hazard class appear on placards. Now, without opportunity for public participation in the decision-making process and indeed without notice, MTB would permit an alternative system under which the UN identification numbers can be applied to a placard in a manner which obliterates the descriptive wording.

Railroad personnel and emergency forces have been trained in the use of placards containing descriptive wording for both train placement and initial emergency response. The record contains no indication of any analysis of the adverse safety impact which may result from the elimination of the descriptive wording on the placards. It would indeed be charitable to define this action by MTB as being arbitrary, capricious, unreasonable, and without support in the record.

The problems which the railroads would confront by the shippers' use of the alternate placard system would be exacerbated by § 172.338 which requires that the railroads replace UN identification numbers and placards which are lost from a car in transit. Even though the railroads are convinced that the use of the UN number on an orange label attached to the car in the vicinity of the placard provides no information for immediate emergency response purposes, we do not object to the label provisions in § 172.332. As a consequence, we do not

object to the provision in § 172.338 requiring as soon as practicable the replacement of the orange labels bearing the UN number (which can be inserted on a blank panel by use of an indelible ink pen) when such labels are lost from a car in transit. However, we strongly object to the requirement that railroads replace the alternative labels which are permitted to be used pursuant to § 172.334. It is not reasonable to require that the railroads maintain a dual system of placards and various colored indelible ink markers so that they may respond to a shipper's choice of a placarding system. This is a particularly unreasonable burden considering that the alternative placarding system has been adopted without justification.

Although the effective date for these regulations is November 28, 1980, shipments may be transported under the alternate placard system on July 1, 1980. Even assuming these were no other problems with the alternate placard system, the AAR would like to reiterate that MTB is inviting disaster by allowing the system to be used on July 1. Railroad personnel, firemen, policemen, and other emergency officials have been using the present placard system for the past several years. In a little over a month thousands of these people will be required to familiarize themselves with the UN hazard class numbering system. Instead of identifying the nature of the hazard by the words printed on a placard, railroad personnel and others will have a numbering system which does not provide easily understood information. The training program required by this new system cannot be completed by July 1. Furthermore, the emergency manuals associated with the UN hazard class numbering system have not been published by the Department of Transportation. In light of the safety dangers posed by immediate use of the alternate placard system, the AAR sees no reasons for the MTB to permit that system to be used as early as July 1.

Conclusion

The AAR recognizes the dangers inherent in the transportation of hazardous materials. The railroad industry has demonstrated a continuing commitment to the safe transportation of hazardous materials. Consistent with these efforts, the AAR feels obliged to bring to the attention of the Department of Transportation regulations which hinder the railroads' safety program. This petition for reconsideration offers suggestions for an improved safety program and discusses those regulations which do not contribute, and are in fact counterproductive, to the safe transportation of hazardous materials. The AAR strongly recommends the adoption of its proposals.

Though much of Southern's petition for reconsideration was a repetition of the AAR petition quoted above, Southern made some additional comments in support of its petition. Concerning the July 1, 1980, voluntary compliance date as it pertains to use of the optional Hazardous Materials Table and the display of identification numbers on placards, Southern stated:

The instructional programs and necessary training cannot be accomplished on such short notice. In addition to the training programs, the MTB's regulations must be published in the Bureau of Explosives Tariff before the railroads can enforce regulations as a part of the contract for the carriage of commodities designated as hazardous materials. Because these regulations constitute such drastic changes from the current DOT regulations, at a minimum they should not be offered as alternatives prior to the effective date of the regulations themselves. It is anomalous for the MTB on page 34564 to admit that it will take some time for the emergency services to become fully familiar with the new system and not recognize the same need for carrier personnel. Unless the MTB withdraws its authorization, Southern must seek court relief.

Concerning the applicability of the regulations to hazardous substances, Southern stated:

Assuming several drums of that material equal the reportable quantity and yet shipper identification is not made under the DOT regulations, a spill from those drums could result in an environmental disaster, and the carrier, even though not having the requisite information to marshall its emergency forces, might still be held accountable. The DOT's statement on page 34570 that the EPA will not bring civil or criminal suit for failure to make notification when notification is not required under the DOT rules is small comfort to any carrier facing enormous liability because it did not act timely to abate or clean up a spilled substance not known to be hazardous.

In a similar vein Southern strenuously objects to the chart the MTB has established in § 171.8 for shippers to use to identify hazardous substance constituents contained in mixtures or solutions. In Southern's view this chart (based on certain weight concentrations and percentages, tied into the RQ weight quantities specified in § 172.101, is still not specific enough, and precise percentages should be furnished by shippers to carriers to determine whether in fact a reportable quantity of a hazardous substance contained in a mixture or solution has been spilled. To be consistent with notifications for pure substances, precise percentages must be provided. Otherwise carriers will be cleaning up spills which do not have to be cleaned up and not cleaning up some which should. To make any exceptions for mixtures or solutions (from the Clean Water Act criteria applicable only to hazardous substances in reportable quantities) goes beyond the MTB's authority.

Concerning the use of the optional Hazardous Materials Table (§ 172.102), Southern stated:

Approximately ninety-nine commodities which would be classed as ORM-E under the Hazardous Materials Table (thus not requiring either placarding or special handling) would be classed as hazardous under the IMCO system (requiring placarding and special handling). Similarly, some 188 commodities ** [**A prime example is diesel fuel] now classed as "combustible" under the Hazardous Materials Table (thus requiring placarding but not special handling) would be classed as "flammable" under the IMCO system (requiring placards and special handling). The importance of such classification changes lies in the increased handling that such cars must be given by the carriers. In the future, depending on the whim of the shipper who chooses to use the Optional Table, it will be necessary either to placard commodities not now placarded, *i.e.*, ORM-E shipments moving under the IMCO system, or to provide special car handling and placement in the train (including shoving to rest under E.O. #5) where the current regulations do not require such handling.

Concerning the display of identification numbers on placards, Southern stated:

An argument might be raised that the presence of the UN hazard class number on the lower corner of the placard obviates the need for the hazard class wording, but Southern submits that it does not. A verbal description of the hazard class is far more quickly and accurately recognizable than any code number could ever be. The use of words—commonly understood, requiring no code book to be read—makes it much more likely that a spill or discharge will be acted on properly, in both ordinary operations and emergency situations. This is especially true in instances where visability is poor because of fog, darkness, or smoke, which would make small-sized numbers hard to see. *E.G.*, even if some of the larger letters in the phrase "Explosives A" are obscured, the message as to the kind of danger is likely to be received by the reader. But if one digit of a UN number is obscured or misread, then the whole message is probably lost. * * * Displaying such identification numbers is a marking requirement, and any replacement should be a shipper's responsibility entirely. While Southern agrees that the placards (as opposed to panels) will have to be replaced by carriers, we vigorously protest any requirement that railroads replace the missing "UN" placard. . . . The MTB should only require the carriers to replace the missing "UN" placard with the most appropriate placard currently used under the existing DOT rules.

Since the AAR and Southern petitions address matters of major interest and concern to many shippers, carriers, and emergency response entities, the MTB believes these petitions should be given full review with public participation prior to taking final action. Therefore, MTB has scheduled a public hearing announced earlier in this publication and solicits written views and comments on the petitions as they relate to the regulations published on May 22, 1980.

(49 U.S.C. 1803, 1804, 1806; 49 CFR 1.53, Appendix A to Part I)

Issued in Washington, D.C. on June 25, 1980.

L. D. Santman,

Director, Materials Transportation Bureau.

[FR Doc. 80-19708 Filed 6-27-80; 8:45 am]

BILLING CODE 4910-60-M

INTERSTATE COMMERCE COMMISSION

49 CFR Part 1033

[Service Order No. 1473]

Various Railroads Authorized To Use Tracks and/or Facilities of the Chicago, Rock Island & Pacific Railroad Co., Debtor (William M. Gibbons, Trustee)

AGENCY: Interstate Commerce Commission.

ACTION: Third Revised Service Order No. 1473.

SUMMARY: Pursuant to Section 122 of the Rock Island Transition and Employee Assistance Act, Pub. L. 96-254, this order authorizes various railroads to provide interim service over Chicago, Rock Island and Pacific Railroad Company, Debtor (William M. Gibbons, Trustee), and to use such tracks and facilities as are necessary for operations. This order permits carriers, previously providing unsubsidized service under Directed Service Order No. 1462, which expired 11:59 p.m., May 31, 1980, and for which statutory authority expired on the same date, to continue to provide service to shippers which would otherwise be deprived of essential rail transportation.

In particular, Third Revised Service Order No. 1473, deletes the authority for the Denver and Rio Grande Western Railroad to serve an area of Denver, Colorado, and permits the Cadillac and Lake City Railway to assume that operation as Item 23 to Appendix A.

EFFECTIVE DATE: 12:01 a.m., June 26, 1980, and continuing in effect until 11:59 p.m., August 31, 1980, unless otherwise modified, amended or vacated by order of this Commission.

FOR FURTHER INFORMATION CONTACT: M. F. Clemens, Jr., (202) 275-7840.

Decided: June 24, 1980.

Pursuant to Section 122 of the Rock Island Transition and Employee Assistance Act, Pub. L. 96-254, the Commission is authorizing various railroads to provide interim service over Chicago, Rock Island and Pacific Railroad Company, Debtor (William M. Gibbons, Trustee), (RI) and to use such tracks and facilities as are necessary for that operation.

In view of the urgent need for continued service over RI's lines pending the implementation of long-range solutions, this order permits carriers, previously providing unsubsidized service under Directed Service Order No. 1462, which expired 11:59 p.m., May 31, 1980, and for which statutory authority expired on the same date, to continue to provide service to shippers which would otherwise be deprived of essential rail transportation.

Third Revised Service Order No. 1473 is revised by making the following changes to Appendix A.

1. Item 8—is changed by deleting the authority in A. from Sandown Junction (Milepost 0.1) to and including junction with DRGW Belt Line (milepost 9.9) all in the vicinity of Denver, Colorado, and by making B., A.

2. Item 23—is added permitting the Cadillac and Lake City Railway to operate the track segment deleted above.

It is the opinion of the Commission that an emergency exists requiring that the railroads listed in the attached appendix be authorized to conduct operations, also identified in the attachment, using RI tracks and/or facilities; that notice and public procedure are impracticable and contrary to the public interest; and good cause exists for making this order effective upon less than thirty days' notice.

It is ordered,

§ 1033.1473 Service Order No. 1473.

(a) *Various railroads authorized to use tracks and/or facilities of the Chicago, Rock Island and Pacific Railroad Company, debtor (William M. Gibbons, Trustee).* Various railroads are authorized to use tracks and/or facilities of the Chicago, Rock Island and Pacific Railroad Company (RI), as listed in Appendix A to this order, in order to provide interim service over the RI.

(b) The Trustee shall permit the affected carriers to enter upon the property of the RI to conduct service essential to these interim operations.

(c) The Trustee will be compensated on terms established between the Trustee and the affected carrier(s); or upon failure of the parties to agree as hereafter fixed by the Commission in accordance with pertinent authority conferred upon it by Section 122(a), Pub. L. 96-254.

(d) Interim operators authorized in Appendix A to this order, shall, within fifteen (15) days of its effective date, notify the Railroad Service Board of the date on which interim operations were commenced or the expected commencement date of those operations.

(e) Interim operators, authorized in Appendix A to this order, shall, within thirty days of commencing operations under authority of this order, notify the RI Trustee of those facilities they believe are necessary or reasonably related to the authorized operations.

(f) During the period of these operations over the RI lines, interim operators shall be responsible for preserving the value of the lines, associated with each interim operation, to the RI estate, and for performing necessary maintenance to avoid undue deterioration of lines and associated facilities.

(g) Any operational or other difficulty associated with the authorized operations shall be resolved through agreement between the affected parties or, failing agreement, by the Commission's Railroad Service Board.

(h) Any rehabilitation, operational, or other costs related to the authorized operations shall be the sole responsibility of the interim operator incurring the costs, and shall not in any way be deemed a liability of the United States Government.

(i) *Application.* The provisions of this order shall apply to intrastate, interstate and foreign traffic.

(j) *Rate applicable.* Inasmuch as this operation by interim operators over tracks previously operated by the RI is deemed to be due to carrier's disability, the rates applicable to traffic moved over these lines shall be the rates applicable to traffic routed to, from, or via these lines which were formerly in effect on such traffic when routed via RI, until tariffs naming rates and routes specifically applicable become effective.

The operator under this temporary authority will not be required to protect transit rate obligations incurred by the RI or the directed carrier, Kansas City Terminal Railway Company, on transit balances currently held in storage.

(k) In transporting traffic over these lines, all interim operators involved shall proceed even though no contracts, agreements, or arrangements now exist between them with reference to the divisions of the rates of transportation applicable to that traffic. Divisions shall be, during the time this order remains in force, those voluntarily agreed upon by and between the carriers; or upon failure of the carriers to so agree, the divisions shall be those hereafter fixed by the Commission in accordance with pertinent authority conferred upon it by the Interstate Commerce Act.

(l) *Employees.* In providing service under this order interim operators, to the maximum extent practicable, shall use the employees who normally would have performed work in connection with the traffic moving over the lines subject to this Service Order.

(m) *Effective date.* This order shall become effective at 12:01 a.m., June 26, 1980.

(n) *Expiration date.* The provisions of this order shall expire at 11:59 p.m.,

August 31, 1980, unless otherwise modified, amended, or vacated by order of this Commission.

This action is taken under the authority of 49 U.S.C. 10304–10305 and Section 122, Pub. L. 96–254.

This order shall be served upon the Association of American Railroads, Car Service Division, as agent of the railroads subscribing to the car service and car hire agreement under the terms of that agreement and upon the American Short Line Railroad Association. Notice of this order shall be given to the general public by depositing a copy in the Office of the Secretary of the Commission at Washington, D.C., and by filing a copy with the Director, Office of the Federal Register.

By the Commission, Railroad Service Board, members Joel E. Burns, Robert S. Turkington and John H. O'Brien. John H. O'Brien not participating.

Agatha L. Mergenovich,

Secretary.

Appendix A.—RI Lines Authorized To Be Operated by Interim Operators

1. *Louisiana and Arkansas Railway Company (L&A):*

A. Tracks one through six of the Chicago, Rock Island and Pacific Railroad Company's (RI) Cadiz yard in Dallas, Texas, commencing at the point of connection of RI track six with the tracks of the Atchision, Topeka and Santa Fe Railway Company (ATSF) in the southwest quadrant of the crossing of the ATSF and the Missouri-Kansas-Texas Railroad Company (MKT) at interlocking station No. 19.

B. from Hodge to Winnfield, Louisiana.

C. Alexandria Yard, Alexandria, Louisiana.

2. *Peoria and Pekin Union Railway Company (P&PU):* All Peoria Terminal Railroad property on the east side of the Illinois River, located within the city limits of Pekin, Illinois.

3. *Union Pacific Railroad Company (UP):*

A. Beatrice, Nebraska.

B. from Colby to Caruso, Kansas.

C. approximately 36.5 miles of trackage extending from Fairbury, Nebraska, to RI Milepost 581.5 north of Hallam, Nebraska.

4. *Toledo, Peoria and Western Railroad Company (TP&W):*

A. Keokuk, Iowa.

B. Peoria Terminal Company trackage from Hollis to Iowa Junction, Illinois.

5. *Burlington Northern, Inc. (BN):*

A. Burlington, Iowa (milepost 0 to milepost 2.06).

B. Fairfield, Iowa.

C. Henry, Illinois (milepost 126) to Peoria, Illinois (milepost 164.35) including the Keller Branch (milepost 1.55 to 8.62).

D. Phillipsburg, Kansas (milepost 282) to CBQ Junction, Kansas (milepost 325.9).

6. *Fort Worth and Denver Railway Company (FW&D):*

A. From Groom, Texas (milepost 718.9) to Adrian, Texas (milepost 809.5).

B. Terminal trackage at Amarillo, Texas, including approximately (3) three miles northerly along the old Liberal Line, and at Bushland, Texas.

C. North Fort Worth, Texas (milepost 603.0 to milepost 611.4).

7. *Chicago and North Western Transporation Company (C&NW):*

A. from Minneapolis-St. Paul, Minnesota, to Kansas City, Missouri.

B. from Rock Junction (milepost 5.2) to Inver Grove, Minnesota (milepost 0).

C. from Inver Grove (milepost 344.7) to Northwood, Minnesota.

D. from Clear Lake Junction (milepost 191.1) to Short Line Junction, Iowa (milepost 73.6).

E. from Short Line Junction Yard (milepost 354) to West Des Moines, Iowa (milepost 364).

F. from Short Line Junction (milepost 73.6) to Carlisle, Iowa (milepost 64.7).

G. from Carlisle (milepost 64.7) to Allerton, Iowa (milepost 0).

H. from Allerton, Iowa (milepost 363) to Trenton, Missouri (milepost 502.2).

I. from Trenton (milepost 415.9) to Air Line Junction, Missouri (milepost 502.2).

J. from Iowa Falls (milepost 97.4) to Esterville, Iowa (milepost 206.9).

K. from Rake (milepost 50.7) to Ocheyedan, Iowa (milepost 502).

L. from Palmer (milepost 454.5) to Royal, Iowa (milepost 502).

M. from Dows (milepost 113.4) to Forest City, Iowa (milepost 158.2).

N. from Cedar Rapids (milepost 100.5) to Cedar River Bridge, Iowa (milepost 96.2) and to serve all industry formerly served by the RI at Cedar Rapids.

O. from Newton (milepost 320.5) to Earlham, Iowa (milepost 388.6).

P. Sibley, Iowa.

Q. Worthington, Minnesota.

R. Altoona to Pella, Iowa.

S. Carlisle, Indianola, Iowa.

T. Omaha, Nebraska, (between milepost 502 to milepost 504).

U. Earlham, (milepost 388.6) to Dexter, Iowa (milepost 393.5).

8. *Chicago, Milwaukee, St. Paul and Pacific Railroad Company (Milwaukee):*

A. from West Davenport, through and including Muscatine, to Fruitland, Iowa, including the Iowa-Illinois Gas and Electric Company near Fruitland.

B. from Seymour, to and including industry and team tracks at Centerville, Iowa.

C. Washington, Iowa.

D. from Newport, to a point near the east bank of the Mississippi River, sufficient to serve Northwest Oil Refinery, at St. Paul Park, Minnesota.

9. *Davenport, Rock Island and North Western Railway Company (DRI):*

A. Davenport, Iowa.

B. Moline, Illinois.

C. Rock Island, Illinois, including 26th Street yard.

D. from Rock Island through Milan, Illinois, to a point west of Milan sufficient to include service to the Rock Island Industrial complex.

E. from East Moline to Silvis, Illinois.

F. from Davenport to Wilton, Iowa.

G. from Rock Island, Illinois, to Davenport, Iowa, sufficient to include service to Rock Island arsenal.

10. *Illinois Central Gulf Railroad Company (ICG):* Ruston, Louisiana.

11. *Waterloo Railroad Company (Waterloo):* Waterloo, Iowa.

12. *St. Louis Southwestern Railway Company (SSW):* operating the Tucumcari Line from Santa Rosa, NM. to St. Louis, MO (via Kansas City, KS/MO), a total distance of 965.2 miles. The line also includes the RI branch line from Bucklin to Dodge City, KS, a distance of 26.5 miles, and North Topeka, KS. Also between Brinkley and Briark, Arkansas, and at Stuttgart, Arkansas.

13. *The Southwestern Oklahoma Railroad Company:* from Hobart, Oklahoma (milepost 70) to Mangum, Oklahoma (milepost 97.7), and from Hobart, (milepost 70) to Anadarko, Oklahoma (milepost 18.5).

14. *Little Rock & Western Railway Company:* from Little Rock, Arkansas (milepost 135.2) to Perry, Arkansas (milepost 184.2); and from Little Rock (milepost 136.4) to the Missouri Pacific/RI Interchange (milepost 130.6).

15. *Missouri Pacific Railroad Company:* from Little Rock, Arkansas (milepost 135.2) to Hazen, Arkansas (milepost 91.5); Little Rock, Arkansas (milepost 135.2) to Pulaski, Arkansas (milepost 141.0); Hot Springs Junction (milepost 0.0) to and including Rock Island milepost 4.7.

16. *Missouri-Kansas-Texas Railroad Company/Oklahoma, Kansas and Texas Railroad Company:*

A. Herington-Ft. Worth Line of Rock Island: beginning at milepost 171.7 within the City of Herington, Kansas, and extending for a distance of 439.5 miles to milepost 613.5 within the City of Ft. Worth, Texas, and use of Fort Worth and Denver trackage between Purina Junction and Tower 55 in Ft. Worth.

B. Ft. Worth-Dallas Line of Rock Island: beginning at milepost 611.9 within the City of Ft. Worth, Texas, and extending for a distance of 34 miles to

milepost 646, within the City of Dallas, Texas.

C. El Reno-Oklahoma City Line of Rock Island: beginning at milepost 513.3 within the City of El Reno, Oklahoma, and extending for a distance of 16.9 miles to milepost 496.4 within the City of Oklahoma City, Oklahoma.

D. Salina Branch Line of Rock Island: beginning at milepost 171.4 within the City of Herington, Kansas, and extending for a distance of 27.4 miles to milepost 198.8 in the City of Abilene, Kansas, including RI trackage rights over the line of the Union Pacific Railroad Company to Salina (including yard tracks) Kansas.

E. Right to use joint with other authorized carriers the Herington-Topeka Line of Rock Island: beginning at milepost 171.7 within the City of Herington, Kansas, and extending for a distance of 81.6 miles to milepost 89.9 within the City of Topeka, Kansas, as bridge rights only.

F. Rock Island rights of use on the Wichita Union Terminal Railway Company and the Wichita Terminal Association, all located in Wichita, Kansas.

G. Rock Island right to interchange with and use the properties of the Great Southwest Railroad Company located in Grand Prairie, Texas.

H. The Atchison Branch from Topeka, at milepost 90.5, to Atchison, Kansas, at milepost 519.4 via St. Joseph, Missouri, at mileposts 0.0 and 498.3, including the use of interchange and yard facilities at Topeka, St. Joseph and Atchison, and the trackage rights used by the Rock Island to form a continuous service route, a distance of 111.6 miles.

I. The Ponca City Line at approximately milepost 26.1 at Billings, Oklahoma, to North Enid, Oklahoma, at milepost 339.5 on the Southern Division main line, a distance of 26.1 miles.

J. That part of the Mangum Branch Line from Chickasha, milepost 0.0 to Anadarko at milepost 18, thence south on the Anadarko Line at milepost 460.5 to milepost 485.3 at Richards Spur, a distance of 42.8 miles.

K. Oklahoma City-McAlester Line of Rock Island: Beginning at milepost 496.4 within the City of Oklahoma City, Oklahoma, and extending for a distance of 131.4 miles to milepost 365.0 within the City of McAlester, Oklahoma.

17. *El Dorado and Wesson Railroad Company:* from El Dorado to Catesville, Arkansas, a distance of 8 miles, in order to serve the Velsical Plant.

18. *The Denver and Rio Grande Western Railroad Company:*

A. from Colorado Springs (milepost 609.1) to and including all rail facilities at Colorado Springs and Roswell, Colorado (milepost 602.8), all in the vicinity of Colorado Springs, Colorado.

19. *Norfolk and Western Railway Company:* is authorized to operate over tracks of the Chicago, Rock Island and Pacific Railroad Company running southerly from Pullman Junction, Chicago, Illinois, along the western shore of Lake Calumet approximately four plus miles to the point, approximately 2,500 feet beyond the railroad bridge over the Calumet Expressway, at which point the RI track connects to Chicago Regional Port District track; and running easterly from Pullman Junction approximately 1,000 feet into the lead to Clear-View Plastics, Inc., for the purpose of serving industries located adjacent to such tracks and connecting to the Chicago Regional Port District. Any trackage rights arrangements which existed between the Chicago, Rock Island and Pacific Railroad Company and other carriers, and which extend to the Chicago Regional Port District Lake Calumet Harbor, West Side, will be continued so that shippers at the port can have NW rates and routes regardless of which carrier performs switching services.

20. *St. Louis-San Francisco Railway Co.:*

A. At Okeene, Oklahoma.

B. At Lawton, Oklahoma.

21. *Southern Railway Co:*

A. At Memphis, Tennessee.

22. *Winchester and Western Railroad Co.:*

A. LaSalle to Ottawa, Illinois, a distance of approximately 14 miles.

*23. *Cadillac and Lake City Railroad:*

A. From Sandown Junction (milepost 0.1) to and including junction with DRGW Belt Line (milepost 3.9) all in the vicinity of Denver, Colorado.

[FR Doc. 80-19614 Filed 6-27-80; 8:45 am]
BILLING CODE 7035-01-M

---

49 CFR Part 1033

[Service Order No. 1474]

Various Railroads Authorized To Use Tracks and/or Facilities of Chicago, Milwaukee, St. Paul & Pacific Railroad Co., Debtor (Richard B. Ogilvie, Trustee)

AGENCY: Interstate Commerce Commission.

ACTION: Revised Service Order No. 1474.

SUMMARY: Pursuant to Section 122 of the Rock Island Transition and Employee Assistance Act, Pub. L. 96-254, the Commission is authorizing various railroads to provide interim service over Chicago, Milwaukee, St. Paul and Pacific Railroad Company, Debtor (Richard B. Ogilvie, Trustee), (MILW) and to use such tracks and facilities as are necessary for that operation.

In view of the urgent need for continued service over MILW's lines pending the implementation of long-range solutions, this order permits carriers, previously providing service under various individual service orders to operate under authority of a single order which appendix describes their operations, and to continue to provide service to shippers which would otherwise be deprived of essential rail transportation.

In particular, this order adds the Wisconsin and Southern Railroad Company to the appendix authorizing operation over certain lines in the state of Wisconsin.

EFFECTIVE DATE: 12:01 a.m., June 26, 1980, and continuing in effect until 11:59 p.m., August 1, 1980, unless otherwise modified, amended, or vacated by order of this Commission.

FOR FURTHER INFORMATION CONTACT: M. F. Clemens, Jr., (202) 274-7840.

Decided June 24, 1980.

Pursuant to Section 122 of the Rock Island Transition and Employee Assistance Act, Pub. L. 96-254, the Commission is authorizing various railroads to provide interim service over Chicago, Milwaukee, St. Paul and Pacific Railroad Company, Debtor (Richard B. Ogilvie, Trustee), (MILW) and to use such tracks and facilities as are necessary for that operation.

In view of the urgent need for continued service over MILW's lines pending the implementation of long-range solutions, this order permits carriers, previously providing service under various individual service orders to operate under authority of a single order which appendix describes their operations, and to continue to provide service to shippers which would otherwise be deprived of essential rail transportation.

Revised Service Order No. 1474, is revised by adding the Wisconsin and Southern Railroad Company as item 14, permitting an interim operation over certain lines in the state of Wisconsin.

It is the opinion of the Commission that an emergency exists requiring that the railroads listed in the attached appendix be authorized to conduct operations, also identified in the attachment, using MILW tracks and/or facilities; that notice and public procedure are impracticable and contrary to the public interest; and that good cause exists for making this order

*Added.

effective upon less than thirty days' notice.

It is ordered,

§ 1033.1474 Service Order No. 1474.

(a) *Various railroads authorized to use tracks and/or facilities of the Chicago, Milwaukee, St. Paul and Pacific Railroad Company, Debtor (Richard B. Ogilvie, Trustee).* Various railroads are authorized to use tracks and/or facilities of the Chicago, Milwaukee, St. Paul and Pacific Railroad Company (MILW), as listed in Appendix A to this order, in order to provide interim service over the MILW.

(b) The Trustee shall permit the affected carriers to enter upon the property of the MILW to conduct service essential to these interim operations.

(c) The Trustee will be compensated on terms established between the Trustee and the affected carrier(s); or upon failure of the parties to agree as hereafter fixed by the Commission in accordance with pertinent authority conferred upon it by Section 122(a), Public Law 96-254.

(d) Interim operators, authorized in Appendix A to this order, shall, within fifteen (15) days of its effective date, notify the Railroad Service Board of the date on which interim operations were commenced on the expected commencement date of those operations.

(e) Interim operators, authorized in Appendix A to this order, shall, within thirty days of commencing operations under authority of this order, notify the MILW Trustee of those facilities they believe are necessary or reasonably related to the authorized operations.

(f) During the period of these operations over the MILW lines, interim operators shall be responsible for preserving the value of the lines, associated with each interim operation, to the MILW estate, and for performing necessary maintenance to avoid undue deterioration of lines and associated facilities.

(g) Any operational or other difficulty associated with the authorized operations shall be resolved through agreement between the affected parties or, failing agreement, by the Commission's Railroad Service Board.

(h) Any rehabilitation, operational, or other costs related to the authorized operations shall be the sole responsibility of the interim operator incurring the costs, and shall not in any way be deemed a liability of the United States Government.

(i) *Application.* The provisions of this order shall apply to intrastate, interstate and foreign traffic.

(j) *Rate applicable.* Inasmuch as this operation by interim operators over tracks previously operated by the MILW is deemed to be due to carrier's disability, the rates applicable to traffic moved over these lines shall be the rates applicable to traffic routed to, from, or via these lines which were formerly in effect on such traffic when routed via MILW, until tariffs naming rates and routes specifically applicable become effective.

(k) In transporting traffic over these lines, all interim operators involved shall proceed even though no contracts, agreements, or arrangements now exist between them with reference to the divisions of the rates of transportation applicable to that traffic. Divisions shall be, during the time this order remains in force, those voluntarily agreed upon by and between the carriers; or upon failure of the carriers to so agree, the divisions shall be those hereafter fixed by the Commission in accordance with pertinent authority conferred upon it by the Interstate Commerce Act.

(l) *Employees*—In providing service under this order interim operators, to the maximum extent practicable, shall use the employees who normally would have performed work in connection with the traffic moving over the lines subject to this Service Order.

(m) *Effective date.* This order shall become effective at 12:01 a.m., June 26, 1980.

(n) *Expiration date.* The provisions of this order shall expire at 11:59 p.m., August 1, 1980, unless otherwise modified, amended, or vacated by order of this Commission.

This action is taken under the authority of 49 U.S.C. 10304-10305 and Section 122, Pub. L. 96-254.

This order shall be served upon the Association of American Railroads, Car Service Division, as agent of the railroads subscribing to the car service and car hire agreement under the terms of that agreement and upon the American Short Line Railroad Association. Notice of this order shall be given to the general public by depositing a copy in the Office of the Secretary of the Commission at Washington, D.C., and by filing a copy with the Director, Office of the Federal Register.

By the Commission, Railroad Service Board, members Joel E. Burns, Robert S. Turkington and John H. O'Brien. John H. O'Brien not participating.

Agatha L. Mergenovich,
Secretary.

Appendix A—MILW Lines Authorized To Be Operated by Interim Operators

1. Chicago and North Western Railroad Company (CNW):

A. At DeKalb, Illinois.

B. At Appleton, Wisconsin.

C. At Lake Preston, Mitchell, and Sioux Falls, South Dakota, and from Wolsey to but not including Aberdeen, South Dakota.

D. At Miloma and Montgomery, Minnesota.

E. Between Jefferson and Marathon, Jefferson and Waukee, and Manning and Huxley, Iowa.

2. Illinois Central Gulf Railroad Company (ICG):

A. Between Cedar Rapids and Louisa, Iowa, including Marion, Iowa.

B. In Sioux City, Iowa, from Pearl Street west approximately 1.5 miles to Tri-View Industrial area, and from Court Street to Virginia Street.

3. Seattle and North Coast Railroad Company (SNC):

A. Between Port Angeles and Port Townsend, Washington, including Pier 27 and associated track in Seattle, Washington.

4. Cedar Rapids and Iowa City Railway Company (CIC):

A. Between Middle Amana and Cedar Rapids, Iowa.

B. Over the Chicago, Rock Island and Pacific Railroad Company trackage—4th Street Corridor—in Cedar Rapids, Iowa, originally operated by MILW under trackage rights.

C. Over certain terminal and industry tracks in Cedar Rapids, Iowa, between milepost 86 and milepost 87 in order to serve the 6th Street Power Station.

5. Escanaba and Lake Superior Railroad Company (ELS):

A. Between Iron Mountain, Michigan, and Green Bay, Wisconsin.

6. Consolidated Rail Corporation (CR):

A. At Momence, Illinois.

7. Des Moines Union Railway Company (DMU):

A. Between Des Moines (milepost 0) and Clive (milepost (8.5), Iowa; and between Clive (milepost 0) and Grimes, Iowa (milepost 7), a total of 15.5 miles.

8. The La Salle and Bureau County Railroad Company (LSBC):

A. From Mendota, Illinois (milepost 69.5) to Ladd, Illinois (milepost 82.1), a total of 12.6 miles.

9. Chicago, Madison and Northern Railway Company (CMN):

A. Between Sparta, Wisconsin, (milepost 2.5) and Viroqua, Wisconsin (milepost 34.7), a distance of approximately 32.2 miles.

B. Between Janesville, Wisconsin (milepost 10.0) and Mineral Point, Wisconsin (milepost 90.7), a distance of approximately 80.7 miles.

10. Wisconsin Central Railroad Company (WCRC):

A. Between Waukesha, Wisconsin (milepost 20.5) and Milton Junction,

Wisconsin (milepost 61.5), a distance of approximately 41.0 miles.

11. Pend Oreille Valley Railroad, Inc. (POV):

A. Between Newport, Washington (milepost 43.6) and Metaline Falls, Washington (milepost 104.7), a distance of approximately 61.1 miles.

12. St. Maries River Railroad Company (SMRR):

A. Between St. Maries and Bovill, Idaho, the Bovill Branch a distance of approximately 52 miles; and between St. Maries and Plummer, Idaho, a distance of approximately 19 miles.

13. Chippewa River Railroad Company (CRRC):

A. Between Eau Claire, Wisconsin, and Durand, Wisconsin, a distance of approximately 33 miles.

*14. Wisconsin and Southern Railroad Company (WSR):

A. The following lines in the state of Wisconsin:

(1) North Milwaukee (milepost 93.72) to Oshkosh (milepost 187.64).

(2) Horicon (milepost 140.27) to Cambia (milepost 165.7)

(3) Granville (milepost 100.5) to Menomonee Falls (milepost 104).

(4) Iron Ridge (milepost 133) to Mayville (milepost 140).

(5) Beaver Dam Junction (milepost 148.5) to Beaver Dam (milepost 150.5).

(6) Fox Lake Junction (milepost 154.5) to Fox Lake (milepost 156.7).

(7) Brandon (milepost 161.15) to Markesan (milepost 172.7).

[FR Doc. 80-19615 Filed 6-27-80; 8:45 am]
BILLING CODE 7035-01-M

* Added.

DEPARTMENT OF COMMERCE

National Oceanic and Atmospheric Administration

50 CFR Part 371

Fraser River Sockeye and Pink Salmon Fishery

AGENCY: National Oceanic and Atmospheric Administration/Commerce.

ACTION: Final regulations.

SUMMARY: On March 24, 1980, the International Pacific Salmon Fisheries Commission (IPSFC) forwarded its proposed regulations for the 1980 commercial fishing season for sockeye and pink salmon in Convention Waters to the Government of the United States for approval, as required by Article VI of the Convention. The United States has approved those regulations, with the exception that the regulations will not apply to Indian tribes exercising treaty-secured fishing rights at the tribes' usual and accustomed fishing places. These fisheries are regulated by 25 CFR Part 256, published by the Department of the Interior.

These regulations for the all-citizen fisheries will become effective on June 22, 1980, in High Seas Convention Waters and in Convention Waters inside the Bonilla Point-Tatoosh Island line; however, fishing will not commence until the week of July 20. These regulations are necessary to achieve the objectives of the Convention (e.g. assure escapement of adequate numbers of salmon within each spawning unit and assure an equitable division of catch between U.S. and Canadian fishermen) and provide for a rational fishery by U.S. fishermen.

EFFECTIVE DATE: 12:01 a.m. on June 22, 1980.

FOR FURTHER INFORMATION CONTACT: Dr. Thomas E. Kruse, Acting Regional Director, Northwest Regional Office, National Marine Fisheries Service, 1700 Westlake Avenue North, Seattle, Washington, 98109, Telephone: (206) 442-7575.

SUPPLEMENTAL INFORMATION: These regulations for 1980 are similar to regulations adopted in previous years that implemented the Convention for the Protection, Preservation, and Extension of the Sockeye Salmon and Pink Salmon Fisheries of the Fraser River System (Convention) between the United States and Canada. The regulations are amended to adjust the amount of open fishing periods and predicted catches to achieve the Convention's conservation requirement of providing adequate escapement of sockeye salmon in each spawning unit for improved future production, and the requirement of dividing equally the harvestable number of sockeye salmon caught in Convention Waters between U.S. and Canadian fisheries. The pre-season fishing schedule in 1979 established, on the basis of IPSFC regulations as approved by the U.S. Government, a 10-week season. The 1979 pre-season schedule provided for eight weeks with two days of fishing per week and two weeks with one day per week. In-season emergency changes in fishing schedules by the IPSFC, in response to developing information on the abundance and migration routes and timing of the spawning races of Fraser River sockeye and pink salmon, resulted in five weeks with only one day of fishing per week, two weeks with two days, two weeks with three days, and one week, September 9-15, when no fishing was permitted. Pink salmon are abundant in Puget Sound tributaries and the Fraser River only in odd-numbered years and will not be available in 1980.

The 1980 pre-season regulations for sockeye salmon fishing provide for a 7-week fishing season with only 1-day fishing per week for the U.S. all-citizen fishery. This pre-season schedule will undoubtedly be adjusted during the season by emergency orders of the IPSFC to meet the paramount objectives of the Convention with Canada: (1) conservation, i.e., adquate escapement of certain portions of the various races of salmon through the fisheries for spawning purposes; and (2) equal division of Convention Waters catches between fishermen of the two nations. Such changes in fishing schedules are historically normal as the season progresses and fish abundance (run size), catches and racial composition are monitored and analyzed daily.

These rules do not apply to Treaty Indians exercising treaty-secured fishing rights at the tribes' usual and accustomed fishing places in accordance with regulations promulgated by the Department of Interior (25 CFR Part 256).

These regulations are being issued with respect to a foreign affairs function of the U.S. and, therefore, are exempt from the requirements of Executive Order 12044, pursuant to Section 6(b)(2) of that Order and the advance notice, public comment and delayed effectiveness procedures of 5 U.S.C., Section 553, pursuant to Section (a)(1) of that Act.

Signed as Washington, D.C., this 24th day of June 1980.

Winfred H. Meibohm,

Executive director, National Marine Fisheries Services.

Accordingly, 50 CFR Part 371 is revised to read as follows:

PART 371—FRASER RIVER SOCKEYE AND PINK SALMON REGULATIONS

Subpart A—General Provisions

Sec.
371.1 Purpose of regulations.
371.2 Scope of regulations.
371.3 Definition of terms.
371.4 Other laws and regulations.
371.5 Reporting requirements.
371.6 Notice of change in regulations.
371.7 Unlawful possession.
371.8 Forcible assault of enforcement officer.
371.9 Commission regulations.
Appendix A—International Pacific Salmon Fisheries Commission Regulations for 1980.

Authority: Sockeye Salmon or Pink Salmon Fishing Act of 1947, 16 U.S.C. 776-776f.

§ 371.1 Purpose of regulations.

The regulations in this Subpart A implement the Convention between the United States and Canada for the Protection of the Sockeye and Pink Salmon Fisheries of the Fraser River System, and the Sockeye Salmon or Pink Salmon Fishing Act of 1947.

§ 371.2 Scope of regulations.

This Part 371 applies to all fishing for sockeye salmon and pink salmon and related activities conducted in U.S. Convention Waters during the time the Commission exercises jurisdiction over the sockeye salmon and pink salmon fisheries, except that these regulations and Appendix A do not govern fishing by Treaty Indians exercising treaty-secured fishing rights at the tribes' usual and accustomed fishing places in accordance with regulations promulgated by the U.S. Department of the Interior (25 CFR 256).

§ 371.3 Definition of terms.

When used in this Subchapter C:

(a) *Act* means: the Sockeye Salmon or Pink Salmon Fishing Act of 1947, 16 U.S.C. 776–776f.

(b) *Commission* means: the International Pacific Salmon Fisheries Commission provided for by Article II of the Convention.

(c) *Convention* means: the Convention between the United States of America and Canada for the Protection, Preservation, and Extension of the Sockeye Salmon Fisheries of the Fraser River system, signed at Washington on the 26th day of May, 1930, as amended by the protocol to the convention to include pink salmon, signed at Ottawa on the 28th day of December 1956.

(d) *Convention Waters* means: those waters described in Article I of the Convention.

(e) *Enforcement Officer* means:

(1) any enforcement agent of the National Marine Fisheries Service.

(2) any commissioned, warrant, or petty officer of the Coast Guard;

(3) any Coast Guard personnel accompanying and acting under the direction of any person described in Paragraph (e)(2) of this Section.

(4) any other person authorized by the Regional Director, Northwest Region, National Marine Fisheries Service to enforce the provisions of the Convention, the Commission's regulations, the Act and this Part 371.

(f) *Fish, Fishing* means: the fishing for, catching, or taking, or the attempted fishing for, catching, or taking, of any sockeye salmon or pink salmon in Convention Waters.

(g) *Fishing gear* means: any net, trap, hook, or other device, appurtenance or equipment, of whatever kind or description, used or capable of being used, for the purpose of capturing fish or an aid in capturing fish.

(h) *Gill Net* means: gill net as defined in Washington Administrative Code, Chapter 220–16, and lawful gillnet as defined in Washington Administrative Code, Chapter 220–47.

(i) *Person* means: individuals, partnerships, associations, and corporations.

(j) *Pink salmon* means: that species of salmon known by the scientific name *Oncorhynchus gorbuscha.*

(k) *Purse seine* means: purse seine as defined in Washington Administrative Code, Chapter 220–16 and lawful purse seine as defined in Washington Administrative Code, Chapter 220–47.

(l) *Reef net* means: reef net as defined in Washington Administrative Code, Chapter 220–16 and lawful reef net as defined in Washington Administrative Code, Chapter 220–47.

(m) *Salmon preserves* means: salmon preserves defined in Washington Administrative Code, Chapter 220–47.

(n) *Sockeye salmon* means: that species of salmon known by the scientific name *Oncorhynchus nerka.*

(o) *State areas* means: fishing areas defined as Puget Sound Salmon Management and Catch Reporting Areas in Washington Administrative Code, Chapter 220–22, as amended.

(p) *Troll line* means: troll line as defined in Washington Administrative Code, Chapter 220–16 and lawful troll line as defined in Washington Administrative Code, Chapter 220–47.

§ 371.4 Other laws and regulations.

Nothing in Part 371 shall be construed to relieve a person from any other requirements imposed by a statute or regulation of the United States or of the State of Washington.

§ 371.5 Reporting requirements.

(a) Any person receiving or purchasing fish caught by any person fishing under § 371.9 Commission Regulations (Appendix A) of this Part 371 shall comply with Washington Administrative Code, Chapter 220–69.

(b) Any person fishing under § 371.9, Commission Regulations (Appendix A) of this Part 371, who sells these fish directly to the consumer, restaurant, boathouse or any other retail outlet shall comply with Washington Administrative Code Chapter 220–69.

(c) No person receiving or purchasing sockeye or pink salmon caught in U.S. Convention Waters during the time the Commission exercises control over fishing for sockeye salmon or pink salmon in U.S. waters shall fail to permit enforcement officers to inspect records or reports required by Washington Administrative Code, Chapter 220–69 or to inspect fish landing, holding or storage areas under the control of this person.

§ 371.6 Notice of change in regulations.

The regulations of the Commission regarding the times permissible to fish are subject to frequent change by Emergency Order. Emergency Orders are published by news releases to radio stations and newspapers in the fishing area. In addition, these Emergency Order schedules will be available by calling the National Marine Fisheries Service toll-free telephone Hotline 1–800–562–2870. The Emergency Orders will be effective from the time of publication or as stated in the order until superseded or modified by further action of the Commission.

§ 371.7 Unlawful possession.

No person subject to this Part 371 shall possess or retain on board a fishing vessel a sockeye or pink salmon while engaged in a fishery for other species in U.S. Convention waters during times these waters are closed by the Commission, except that this provision shall not prohibit the direct transport of legally-caught sockeye or pink salmon to off-loading areas.

§ 371.8 Forcible assault of enforcement officer.

No person shall forcibly assault, resist, oppose, impede, intimidate or interfere with an enforcement officer engaged in enforcing the Convention, the Commission's regulations, the Act or this Part 371.

§ 371.9 Commission regulations.

Appendix A sets forth regulations of the Commission for the 1980 fishing season. These regulations as may be modified from time to time by Emergency Orders of the Commission and disseminated pursuant to § 371.6 of this Part 371, are the "Regulations of the Commission," violation of which is unlawful under the Act.

Appendix A—International Pacific Salmon Fisheries Commission Regulations

1. No person shall fish for sockeye or pink salmon with nets from the 22nd day of June, 1980, to the 19th day of July, 1980, both dates inclusive.

2. (1) No person shall fish for sockeye or pink salmon with purse seines in Puget Sound Salmon Management and Catch Reporting Areas 4B, 5 and 6C:

(a) From the 20th day of July, 1980, to the 16th day of August, 1980, both dates inclusive, except from five o'clock in the

forenoon to half past nine o'clock in the afternoon of Monday of each week; and

(b) From the 17th day of August, 1980, to the 30th day of August, 1980, both dates inclusive, except from five o'clock in the forenoon to nine o'clock in the afternoon of Monday of each week.

(2) No person shall fish for sockeye or pink salmon with gill nets in the waters described in subsection (1) of this section:

(a) From the 20th day of July, 1980, to the 26th day of July, 1980, and from the 3rd day of August, 1980, to the 9th day of August, 1980, all dates inclusive, except from seven o'clock in the afternoon of Monday to half past nine o'clock in the forenoon of Tuesday of each week; and

(b) From the 27th day of July, 1980, to the 2nd day of August, 1980, and from the 10th day of August, 1980, to the 16th day of August, 1980, all dates inclusive, except from seven o'clock in the afternoon of Sunday to half past nine o'clock in the forenoon of Monday of each week; and

(c) From the 17th day of August, 1980, to the 23rd day of August, 1980, both dates inclusive, except from six o'clock in the afternoon of Monday to nine o'clock in the forenoon of Tuesday; and

(d) From the 24th day of August, 1980, to the 30th day of August, 1980, both dates inclusive, except from six o'clock in the afternoon of Sunday to nine o'clock in the forenoon of Monday.

(3) No person shall fish for sockeye or pink salmon with commercial trolling gear in the waters described in subsection (1) of this section from the 20th day of July, 1980, to the 30th day of August, 1980, both dates inclusive, except from Monday through Friday of each week on those days when purse seine fishing is permitted within that area.

3. (1) No person shall fish for sockeye or pink salmon with purse seines in Puget Sound Salmon Management and Catch Reporting Areas 6, 6A, 7, 7A and 7D:

(a) From the 20th day of July, 1980, to the 16th day of August, 1980, both dates inclusive, except from five o'clock in the forenoon to half past nine o'clock in the afternoon of Monday of each week; and

(b) From the 17th day of August, 1980, to the 6th day of September, 1980, both dates inclusive, except from five o'clock in the forenoon to nine o'clock in the afternoon of Monday of each week.

(2) No person shall fish for sockeye or pink salmon with reef nets in the waters described in subsection (1) of this section:

(a) From the 20th day of July, 1980, to the 26th day of July, 1980, from the 3rd day of August, 1980, to the 9th day of August, 1980, from the 17th day of August, 1980, to the 23rd day of August, 1980, and from the 31st day of August, 1980, to the 6th day of September, 1980, all dates inclusive, except from half past six o'clock in the forenoon to eight o'clock in the afternoon of Sunday of each week; and

(b) From the 27th day of July, 1980, to the 2nd day of August, 1980, and from the 10th day of August, 1980, to the 16th day of August, 1980, all dates inclusive, except from half past seven o'clock in the forenoon to half past nine o'clock in the afternoon of Sunday of each week; and

(c) From the 24th day of August, 1980, to the 30th day of August, 1980, both dates inclusive, except from half past seven o'clock in the forenoon to nine o'clock in the afternoon of Sunday.

(3) No person shall fish for sockeye or pink salmon with gill nets in the waters described in subsection (1) of this section:

(a) From the 20th day of July, 1980, to the 26th day of July, 1980, and from the 3rd day of August, 1980, to the 9th day of August, 1980, all dates inclusive, except from seven o'clock in the afternoon of Monday to half past nine o'clock in the forenoon of Tuesday of each week; and

(b) From the 27th day of July, 1980, to the 2nd day of August, 1980, and from the 10th day of August, 1980, to the 16th day of August, 1980, all dates inclusive, except from seven o'clock in the afternoon of Sunday to half past nine o'clock in the forenoon of Monday of each week; and

(c) From the 17th day of August, 1980, to the 23rd day of August, 1980, and from the 31st day of August, 1980, to the 6th day of September, 1980, all dates inclusive, except from six o'clock in the afternoon of Monday to nine o'clock in the forenoon of Tuesday of each week; and

(d) From the 24th day of August, 1980, to the 30th day of August, 1980, both dates inclusive, except from six o'clock in the afternoon of Sunday to nine o'clock in the forenoon of Monday.

4. (1) No person shall fish for sockeye or pink salmon with nets in that portion of the waters described in subsection (1) of section 3 lying northerly and westerly of a straight line drawn from Iwersen's Dock on Point Roberts in the State of Washington to Georgina Point Light at the entrance to Active Pass in the Province of British Columbia from the 31st day of August, 1980, to the 6th day of September, 1980, and from the 14th day of September, 1980, to the 20th day of September, 1980, all dates inclusive.

(2) No person shall fish for sockeye or pink salmon with nets in that portion of waters described in subsection (1) of section 3 lying westerly and northerly of a straight line drawn from the low water range marker in Boundary Bay on the International Boundary through the east tip of Point Roberts in the State of Washington to the East Point Light on Saturna Island in the Province of British Columbia from the 7th day of September, 1980, to the 13th day of September, 1980, both dates inclusive.

5. The foregoing recommended regulations shall not apply to the following waters:

(1) Puget Sound Salmon Management and Catch Reporting Areas as follows:

(a) Commencing July 20, 1980, Area 7B.

(b) Areas 6B and 7C.

(2) Preserves previously established by the Director of Fisheries of the State of Washington for the protection of other species of food fish.

All times hereinbefore mentioned shall be Pacific Daylight Saving Time.

[FR Doc. 80-19499 Filed 6-27-80; 8:45 am]
BILLING CODE 3510-22-M

Proposed Rules

Federal Register
Vol. 45, No. 127
Monday, June 30, 1980

This section of the FEDERAL REGISTER contains notices to the public of the proposed issuance of rules and regulations. The purpose of these notices is to give interested persons an opportunity to participate in the rule making prior to the adoption of the final rules.

DEPARTMENT OF AGRICULTURE

Federal Crop Insurance Corporation

7 CFR Part 403

Proposed Peach Crop Insurance Regulations

AGENCY: Federal Crop Insurance Corporation, USDA.

ACTION: Proposed rule.

SUMMARY: This proposed rule prescribes procedures for insuring peaches effective with the 1981 crop year. This rule is a revision of the previous regulations for insuring peaches to include several changes and to reissue the regulations in a clearer, shorter, and simpler document. This proposed rule is promulgated under the authority of the Federal Crop Insurance Act, as amended.

DATE: Written comments, data, and opinions must be submitted not later than August 29, 1980, to be sure of consideration.

ADDRESS: Written comments on this proposed rule should be sent to James D. Deal, Manager, Federal Crop Insurance Corporation, U.S. Department of Agriculture, Washington, D.C. 20250.

FOR FURTHER INFORMATION CONTACT: Peter F. Cole, Secretary, Federal Crop Insurance Corporation, U.S. Department of Agriculture, Washington, D.C. 20250, telephone 202-447-3325.

The Draft Impact Analysis describing the options considered in developing this proposed rule and the impact of implementing each option is available upon request from the above-named individual.

SUPPLEMENTARY INFORMATION: This proposed action has been reviewed under USDA procedures established in Secretary's Memorandum No. 1955 to implement Executive Order No. 12044, and has been classified as "not significant".

Under the authority contained in the Federal Crop Insurance Act, as amended (7 U.S.C. 1501 *et seq.*), the Federal Crop Insurance Corporation (FCIC) proposes to revise and reissue the Peach Crop Insurance Regulations (7 CFR Part 403) as published in the Federal Register at 43 FR 56205 (Friday, December 1, 1978) and amended by 44 FR 74792 (Tuesday, December 18, 1979), effective for the 1981 crop year.

In addition to shortening and simplifying the regulations, the proposed 7 CFR Part 403 provides (1) for a change in the premium adjustment table to reduce the premium adjustment factor for unfavorable insuring experience, (2) that any premium not paid by the termination date will be increased by a 9 percent charge, with a 9 percent simple interest charge applying to any unpaid balance at the end of each subsequent 12-month period thereafter, (3) that the contract shall terminate if no premium is earned for 5 consecutive years, and (4) that the sales closing date for all States except Arkansas and South Carolina is changed from January 10 to December 31.

In addition, § 403.5, "Good Faith Reliance on Misrepresentation", of the proposed Peach Crop Insurance Regulations increases the limitation from $5,000 to $20,000 in those cases involving good faith reliance on misrepresentation wherein the Manager of the Corporation (FCIC) is authorized to take action to grant relief.

All previous regulations applicable to insuring peaches as found in 7 CFR Part 403 will not be applicable to the 1981 and succeeding peach crops but will remain in effect for Federal Crop Insurance Corporation peach crop insurance policies issued for the crop years prior to 1981.

All written submissions made pursuant to this notice will be available for public inspection in the office of the Manager during regular business hours, 8:15 a.m. to 4:45 p.m., Monday through Friday.

Proposed Rule

Accordingly, pursuant to the authority contained in the Federal Crop Insurance Act, as amended (7 U.S.C. 1501 *et seq.*), the Federal Crop Insurance Corporation proposes to amend 7 CFR Part 403 by revoking Subpart—Regulations for the 1979 and succeeding crop years and, in lieu therefore, substituting the following subpart to read as follows:

PART 403—PEACH CROP INSURANCE

Subpart—Regulations for the 1981 and Succeeding Crop Years

Sec.

403.1 Availability of Peach Insurance.
403.2 Premium rates and levels of insurance.
403.3 Public notice of indemnities paid.
403.4 Creditors.
403.5 Good faith reliance on misrepresentation.
403.6 The contract.
403.7 The application and policy.

Authority: Secs. 506, 516, 52 Stat. 73, as amended, 77, as amended (7 U.S.C. 1506, 1516).

Subpart—Regulations for the 1981 and Succeeding Crops Years

§ 403.1 Availability of Peach Insurance.

Insurance shall be offered under the provisions of this subpart on peaches in counties within limits prescribed by and in accordance with the provisions of the Federal Crop Insurance Act, as amended. The counties shall be designated by the Manager of the Corporation from those approved by the Board of Directors of the Corporation. Before insurance is offered in any county, there shall be published by appendix to this part the names of the counties in which peach insurance will be offered.

§ 403.2 Premium rates and levels of insurance.

(a) The Manager shall establish premium rates and levels of insurance for peaches which shall be shown on the county actuarial table on file in the office for the county and may be changed from year to year.

(b) At the time the application for insurance is made, the applicant shall elect a level of insurance from among those levels shown on the actuarial table for the crop year.

§ 403.3 Public notice of indemnities paid.

The Corporation shall provide for posting annually in each county at each county courthouse a listing of the indemnities paid in the county.

§ 403.4 Creditors.

An interest of a person in an insured crop existing by virtue of a lien, mortgage, garnishment, levy, execution, bankruptcy, or an involuntary transfer shall not entitle the holder of the interest to any benefit under the contract except as provided in the policy.

§ 403.5 Good faith reliance on misrepresentation.

Notwithstanding any other provision of the peach insurance contract, whenever (a) an insured person under a contract of crop insurance entered into under these regulations, as a result of a misrepresentation or other erroneous action or advice by an agent or employee of the Corporation, (1) is indebted to the Corporation for additional premiums, or (2) has suffered a loss to a crop which is not insured or for which the insured person is not entitled to an indemnity because of failure to comply with the terms of the insurance contract, but which the insured person believed to be insured, or believed the terms of the insurance contract to have been complied with or waived, and (b) the Board of Directors of the Corporation, or the Manager in cases involving not more than $20,000, finds (1) that an agent or employee of the Corporation did in fact make such misrepresentation or take other erroneous action or give erroneous advice, (2) that said insured person relied thereon in good faith, and (3) that to require the payment of the additional premiums or to deny such insured's entitlement to the indemnity would not be fair and equitable, such insured person shall be granted relief the same as if otherwise entitled thereto.

§ 403.6 The contract.

The insurance contract shall become effective upon the acceptance by the Corporation of a duly executed application for insurance on a form prescribed by the Corporation. Such acceptance shall be effective upon the date the notice of acceptance is mailed to the applicant. The contract shall cover the peach crop as provided in the policy. The contract shall consist of the application, the policy the attached appendix, and the provisions of the county actuarial table. Any changes made in the contract shall not affect its continuity from year to year. Copies of forms referred to in the contract are available at the office for the county.

§ 403.7 The application and policy.

(a) Application for insurance on a form prescribed by the Corporation may be made by any person to cover such person's insurable share in the peach crop as landlord, owner-operator, or tenant. The application shall be submitted to the Corporation at the office for the county on or before the applicable closing date on file in the office for the county.

(b) The Corporation reserves the right to discontinue the acceptance of applications in any county upon its determination that the insurance risk involved is excessive, and also, for the same reason, to reject any individual application. The Manager of the Corporation is authorized in any crop year to extend the closing date for submitting applications or contract changes in any county, by placing the extended date on file in the office for the county and publishing a notice in the Federal Register upon the Manager's determination that no adverse selectivity will result during the period of such extension: *Provided, however,* That if adverse conditions should develop during such period, the Corporation will immediately discontinue the acceptance of applications.

(c) In accordance with the provisions governing changes in the contract contained in policies issued under FCIC regulations for the 1979 and succeeding crop years, a contract in the form provided for under this subpart will come into effect as a continuation of a peach contract issued under such prior regulations, without the filing of a new application.

(d) The provisions of the application and Peach Insurance Policy for the 1981 and succeeding crop years, and the Appendix to the Peach Insurance Policy are as follows:

U.S. Department of Agriculture

Federal Crop Insurance Corporation

Application for 19— and Succeeding Crop Years Peach Crop Insurance Contract

Contract number _____
Identification number _____
Name, address, and (Zip code) _____
County and State _____
Type of entity _____
Applicant is over 18 Yes No

A. The applicant, subject to the provisions of the regulations of the Federal Crop Insurance Corporation (herein called "Corporation"), herey applies to the Corporation for insurance on the applicant's share in the peaches grown on insurable acreage as shown on the county actuarial table for the above-stated county. The applicant elects from the actuauial table the level of insurance. The premium rates and levels of insurance shall be those shown on the applicable county actuarial table filed in the office for the county for each crop year.
Level of insurance election _____

Example: For the 19 crop year only (100% share)

Location Farm No.	Expected production bushels per acre	Amount of insurance per acre [1]	Premium per $100 [2]	(A)

[1] Your amount of insurance will be on a unit basis (acres x amount of insurance per acre x share) and will be subject to reduction based on section 4(b) of the policy.

[2] Your premium is subject to adjustment in accordance with section 5(c) of the policy.

B. When notice of acceptance of this application is mailed to the applicant by the corporation, the contract shall be in effect for the crop year specified above, unless the time for submitting applications has passed at the time this application is filed, and shall continue for each succeeding crop year until canceled or terminated as provided in the contract. This accepted application, the following peach insurance policy, the attached appendix, and the provisions of the county actuarial table showing the levels of insurance, premium rates, uninsurable varieties, and insurable and uninsurable acreage shall constitute the contract. Additional information regarding contract provisions can be found in the county regulations folder on file in the office for the county. No term or condition of the contract shall be waived or changed except in writing by the corporation.

Code No./Witness to Signature of applicant
Date 19
Address of office for county: _____
Phone _____
Location of farm headquarters: _____
Phone _____

Peach Crop Insurance Policy

Terms and Conditions

Subject to the provisions in the attached appendix:

1. *Causes of Loss.* (a) Causes of loss insured against. The insurance provided is against unavoidable loss of production resulting from (1) drought, earthquake, flood, freeze, frost, hail, hurricane, lightning, tornado, and wind occurring within the insurance period, and (2) an insufficient number of hours of chilling temperature to effectively break the dormant period, subject to any exceptions, exclusions, or limitations with respect to causes of loss shown on the actuarial table.

(b) Causes of loss not insured against. The contract shall not cover any loss of production due to (1) disease or insect infestation, (2) the neglect or malfeasance of the insured, any member of the insured's household, the insured's tenants or employees, (3) failure to follow recognized good farming practices, (4) damage resulting from the backing up of water by any governmental or public utilities dam or reservoir project, (5) split pits and misshapen fruit regardless of the cause, or (6) any cause not specified as an insured cause in this policy as limited by the actuarial table.

2. *Crop and Acreage Insured.* (a) The crop insured shall be a variety of peaches established as adapted to the area and not shown as uninsurable on the actuarial table, which is located on insured acreage, and for which the actuarial table shows a level of insurance and premium rate.

(b) The acreage insured for each crop year shall be that acreage of peaches

shown as insurable on the actuarial table, and the insured's share therein as reported by the insured or as determined by the Corporation, whichever the Corporation shall elect: *Provided,* That insurance shall not attach or be considered to have attached, as determined by the Corporation, to any acreage (1) on which the trees have not reached the 4th growing season after being set out or (2) having a minimum expected production of less than 100 bushels per acre on the date insurance attaches.

3. *Responsibility of Insured to Report Acreage, Share, and Expected Production.* (a) Not later than January 10 each year, the insured shall submit to the Corporation at the office for the county on a form prescribed by the Corporation a report showing the following: (1) All acreage of peaches (including a designation of any acreage to which insurance does not attach) in which the insured has a share, (2) the insured's share therein, and (3) the expected production per acre from such acreage.

4. *Amount of Insurance Per Acre, Coverage Levels, and Prices for Computing Indemnities.* (a) For each crop year of the contract, the levels of insurance per acre shall be those shown on the actuarial table: *Provided,* That the level of insurance for peaches intended for processing, as determined by the Corporation, shall not exceed the Medium level.

(b) The dollar amount of insurance per acre for each crop year shall be determined as shown in the following Amount of Insurance Table. (1) For the purpose of computing premium, the dollar amount of insurance per acre shall be the amount corresponding with the expected production (as reported by the insured or as determined by the Corporation, whichever the Corporation shall elect) and the applicable level of insurance as shown in Columns A and B. (2) For the purpose of determining any indemnity, where the amount of fruit remaining on the trees at the time of harvest is less than the expected production, the dollar amount of insurance shall be the amount shown in Columns C through H opposite the applicable level of insurance shown in Column B.

Amount of Insurance Table

Dollar amount of insurance per acre based upon expected production and dollar level of insurance per acre at the time insurance attaches		Dollar amount of insurance per acre based upon bushels of fruit remaining on the trees at the time of harvest					
Col. A	Col. B	Col. C	Col. D	Col. E	Col. F	Col. G	Col. H
Expected production (bushels)	Levels of insurance	200 or more	150 to 199	100 to 149	50 to 99	10 to 49	0 to 9
300 or more	High $800	$800	$720	$640	$560	$480	$400
	Med. 600	600	540	480	420	360	300
	Low 400	400	360	320	280	240	200
250–299	High 700	700	630	560	490	420	350
	Med. 525	525	475	420	370	315	265
	Low 350	350	315	280	245	210	175
200–249	High 600	600	540	480	420	360	300
	Med. 450	450	405	360	315	270	225
	Low 300	300	270	240	210	180	150
150–199	High 500	500	500	440	375	315	250
	Med. 375	375	375	330	280	235	190
	Low 250	250	250	220	190	155	125
100–149	High 400	400	400	400	335	265	200
	Med. 300	300	300	300	250	200	150
	Low 200	200	200	200	165	135	100

(c) The price per bushel for computing indemnities shall be determined by the Corporation as follows: (1) The price for fresh fruit shall be based upon the applicable average FOB shipping point price per ¾ bushel carton of U.S. Extra No. 1 two-inch peaches (if not available, the next larger size for which a price is available) as reported by the Market News Service of the Department of Agriculture for the seven consecutive market days commencing with the day harvest starts for the variety as determined by the Corporation: *Provided,* That such price shall never be less than $4.00 per ¾ bushel carton. (2) The price for peaches which are intended for processing, as determined by the Corporation, shall be the price per bushel received by the insured: *Provided,* That such price shall never be less than $2.00 per bushel.

5. *Annual Premium.* (a) The annual premium is earned and payable on the date insurance attaches and the amount thereof shall be determined by multiplying the insured acreage times the amount of insurance per acre (based on the expected production when insurance attaches), times the applicable premium rate, times the insured's share at the time insurance attaches, times the applicable premium adjustment percentage in subsection (c) of this section.

(b) For premium adjustment purposes, only the years during which premiums were earned subsequent to the 1978 crop year shall be considered.

(c) The premium shall be adjusted as shown in the following table:

BILLING CODE 3410-08-M

% ADJUSTMENTS FOR FAVORABLE CONTINUOUS INSURANCE EXPERIENCE

	Numbers of Years Continuous Experience Through Previous Year															
	0	1	2	3	4	5	6	7	8	9	10	11	12	13	14	15 or more
Loss Ratio 1/ Through Previous Crop Year	Percentage Adjustment Factor For Current Crop Year															
.00 – .20	100	95	95	90	90	85	80	75	70	70	65	65	60	60	55	50
.21 – .40	100	100	95	95	90	90	90	85	80	80	75	75	70	70	65	60
.41 – .60	100	100	95	95	95	95	95	90	90	90	85	85	80	80	75	70
.61 – .80	100	100	95	95	95	95	95	95	90	90	90	90	85	85	85	80
.81 – 1.09	100	100	100	100	100	100	100	100	100	100	100	100	100	100	100	100

% ADJUSTMENTS FOR UNFAVORABLE INSURANCE EXPERIENCE

	Number of Loss Years Through Previous Year 2/															
	0	1	2	3	4	5	6	7	8	9	10	11	12	13	14	15
Loss Ratio 1/ Through Previous Crop Year	Percentage Adjustment Factor For Current Crop Year															
1.10 – 1.19	100	100	100	102	104	106	108	110	112	114	116	118	120	122	124	126
1.20 – 1.39	100	100	100	104	108	112	116	120	124	128	132	136	140	144	148	152
1.40 – 1.69	100	100	100	108	116	124	132	140	148	156	164	172	180	188	196	204
1.70 – 1.99	100	100	100	112	122	132	142	152	162	172	182	192	202	212	222	232
2.00 – 2.49	100	100	100	116	128	140	152	164	176	188	200	212	224	236	248	260
2.50 – 3.24	100	100	100	120	134	148	162	176	190	204	218	232	246	260	274	288
3.25 – 3.99	100	100	105	124	140	156	172	188	204	220	236	252	268	284	300	300
4.00 – 4.99	100	100	110	128	146	164	182	200	218	236	254	272	290	300	300	300
5.00 – 5.99	100	100	115	132	152	172	192	212	232	252	272	292	300	300	300	300
6.00 – Up	100	100	120	136	158	180	202	224	246	268	290	300	300	300	300	300

1/ Loss Ratio means the ratio of indemnity(ies) paid to premium(s) earned.

2/ Only the crop years subsequent to the 1978 crop year will be used to determine the number of "Loss Years" (A crop year is determined to be a "Loss Year" when the amount of indemnity for the year exceeds the premium for the year).

BILLING CODE 3410-03-C

(d) Any amount of premium for an insured crop which is unpaid on the day following the termination date for indebtedness for such crop shall be increased by a 9 percent service fee, which increased amount shall be the premium balance, and thereafter, at the end of each 12-month period, 9 percent simple interest shall attach to any amount of the premium balance is which unpaid: *Provided,* When notice of loss has been timely filed by the insured as provided in section 7 of this policy, the service fee will not be charged and the contract will remain in force if the premium is paid in full within 30 days after the date of approval or denial of the claim for indemnity; *however,* if any premium remains unpaid after such date, the contract will terminate and the amount of premium outstanding shall be increased by a 9 percent service fee, which increased amount shall be the premium balance. If such premium balance is not paid within 12 months immediately following the termination date, 9 percent simple interest shall apply from the termination date and each year thereafter to any unpaid premium balance.

(e) Any unpaid amount due the Corporation may be deducted from any indemnity payable to the insured by the Corporation or from any loan or payment to the insured under any Act of Congress or program administered by the U.S. Department of Agriculture, when not prohibited by law.

6. *Insurance Period.* Insurance on insured acreage shall attach each crop year on January 10, and shall cease in the same calendar year upon the earliest of (1) harvest, (2) September 15, or (3) total destruction of the insured peach crop.

7. *Notice of Damage or Loss.* (a) Any notice of damage or loss shall be given promptly in writing by the insured to the Corporation at the office for the county after insured damage to the peaches becomes apparent, giving the date(s) and cause(s) of such damage.

(b) If an indemnity is to be claimed on any unit, notwithstanding any prior notice of damage, the insured shall notify the office for the county of the intended date of harvest at least seven days prior to the start of harvest. If (1) damage occurs within the seven-day period prior to the start of or during harvest, notice of damage must be given immediately to the office for the county or (2) if harvest will begin after the calendar date for the end of the insurance period, the insured shall give written notice thereof to the Corporation at the office for the county not later than the calendar date for the end of the insurance period. The Corporation reserves the right to provide additional time if it determines there are extenuating circumstances.

(c) Any insured acreage which is not to be harvested and upon which an indemnity is to be claimed shall be left intact until inspected by the Corporation.

(d) The Corporation may reject any claim for indemnity if any of the requirements of this section are not met.

8. *Claim for Indemnity.* (a) It shall be a condition precedent to the payment of any indemnity that the insured (1) establish that any loss has been directly caused by one or more of the causes insured against during the insurance period for which the indemnity is claimed and (2) furnish any other information regarding the manner and extent of loss as may be required by the Corporation.

(b) Indemnities shall be determined separately for each unit. The amount of indemnity for any unit shall be determined by subtracting the dollar value of production from the dollar amount of insurance and multiplying the remainder by the insured share. The dollar value of production is obtained by multiplying the total production to be counted by the applicable price for computing indemnities provided in subsection 4(c). The dollar amount of insurance is obtained by multiplying the applicable dollar amount per acre determined in accordance with the provisions of subsections 4 (a) and (b) times the determined acres: *Provided,* That if the premium computed on the insured acreage and share is more than the premium computed on the reported acreage and share, the amount of indemnity shall be computed on the insured acreage and share and then reduced proportionately.

(c) The total production to be counted for a unit shall be determined by the Corporation and subject to adjustment for wind and hail damage to fruit, shall include all harvested production and any appraisals made by the Corporation for unharvested production, poor farming practices, uninsured causes of loss, or for acreage abandoned or put to another use without prior written consent of the Corporation. The production to be counted shall not be less than the expected production per acre at the time insurance attached for any acreage of peaches which is abandoned, put to another use without prior written consent of the Corporation, not inspected by the Corporation prior to the completion of harvest, or damaged solely by an uninsured cause.

(d) The Corporation reserves the right to delay final appraisal of any damage until the extent of damage can be determined.

9. *Misrepresentation and Fraud.* The Corporation may void the contract without affecting the insured's liability for premiums or waiving any right, including the right to collect any unpaid premiums if, at any time, the insured has concealed or misrepresented any material fact or committed any fraud relating to the contract, and such voidance shall be effective as of the beginning of the crop year with respect to which such act or omission occurred.

10. *Transfer of Insured Share.* If the insured transfers any part of the insured share during the crop year, protection will continue to be provided according to the provisions of the contract to the transferee for such crop year on the transferred share, and the transferee shall have the same rights and responsibilities under the contract as the original insured for the current crop year. Any transfer shall be made on an approved form.

11. *Records and Access to Farm.* The insured shall keep or cause to be kept for two years after the time of loss, records of the harvesting, storage, shipments, sale or other disposition of all peaches produced on each unit including separate records showing the same information for production from any uninsured acreage. Any persons designated by the Corporation shall have access to such records and the farm for purposes related to the contract.

12. *Life of Contract: Cancellation and Termination.* (a) The contract shall be in effect for the crop year specified on the application and may not be canceled for such crop year. Thereafter, either party may cancel the insurance for any crop year by giving a signed notice to the other on or before the cancellation date preceding such crop year.

(b) Except as provided in section 5(d) of this policy, the contract will terminate as to any crop year if any amount due the Corporation under this contract is not paid on or before the termination date for indebtedness preceding such crop year: *Provided,* That the date of payment for premium (1) if deducted from an indemnity claim shall be the date the insured signs such claim or (2) if deducted from payment under another program administered by the U.S. Department of Agriculture shall be the date such payment was approved.

(c) Following are the cancellation and termination dates:

State, Cancellation Date, and Termination Date for Indebtedness

All states, November 30 and January 10.

(d) In the absence of a notice from the insured to cancel, and subject to the provisions of subsections (a), (b), and (c) of this section, and section 6 of the Appendix, the contract shall continue in force for each succeeding crop year.

Appendix (Additional Terms and Conditions)

1. *Meaning of Terms.* For the purposes of peach crop insurance:

(a) "Actuarial table" means the forms and related material for the crop year approved by the Corporation which are on file for public inspection in the office for the county, and which show the levels of insurance, premium rates, uninsurable varieties, insurable and uninsurable acreage, and related information regarding peach insurance in the county.

(b) "County" means the county shown on the application and any additional land located in a local producing area bordering on the county, as shown on the actuarial table.

(c) "Crop year" means the period within which the peach crop is normally grown and shall be designated by the calendar year in which the peach crop is normally harvested.

(d) "Harvest" means the picking of peaches from the tree or from the ground either by hand or machine for the purpose of marketing.

(e) "Insurable acreage" means the land classified as insurable by the Corporation and shown as such on the county actuarial table.

(f) "Insured" means the person who submitted the application accepted by the Corporation.

(g) "Office for the county" means the Corporation's office serving the county shown on the application for insurance or such office as may be designated by the Corporation.

(h) "Person" means an individual, partnership, association, corporation, estate,

trust, or other business enterprise or legal entity, and wherever applicable, a State, a political subdivision of a State, or any agency thereof.

(i) "Share" means the interest of the insured as landlord, owner-operator, or tenant in the insured peach crop at the time insurance attaches as reported by the insured or as determined by the Corporation, whichever the Corporation shall elect, and no other share shall be deemed to be insured: *Provided*, That for the purpose of determining the amount of indemnity, the insured share shall not exceed the insured's share at the earliest of (1) the date of beginning of harvest on the unit, (2) the calendar date for the end of the insurance period, or (3) the date the entire crop on the unit is destroyed, as determined by the Corporation.

(j) "Tenant" means a person who rents land from another person for a share of the peach crop or proceeds therefrom.

(k) "Unit" means all insurable acreage of peaches in the county on the date insurance attaches for the crop year (1) in which the insured has a 100 percent share, or (2) which is owned by one entity and operated by another entity on a share basis. Land rented for cash, a fixed commodity payment, or any consideration other than a share in the peach crop on such land shall be considered as owned by the lessee. Land which would otherwise be one unit may be divided according to applicable guidelines on file in the office for the county, or by written agreement between the Corporation and the insured. The Corporation shall determine units as herein defined when adjusting a loss, notwithstanding what is shown on the acreage report, and has the right to consider any acreage and share reported by or for the insured's spouse or child or any member of the insured's household to be the bona fide share of the insured or any other person having the bona fide share.

2. *Acreage Insured.* (a) The Corporation reserves the right to limit the insured acreage of peaches to any acreage limitations established under any Act of Congress provided the insured is so notified in writing prior to the time insurance attaches.

(b) If the insured does not submit an acreage report on or before the acreage reporting date on file in the office for the county, the Corporation may elect to determine by units the insured acreage, share, and expected production per acre, or declare the insured acreage on any unit(s) to be "zero". If the insured does not have a share in any insured acreage in the county for any year, the insured shall submit a report so indicating. Any acreage report submitted by the insured may be revised only upon approval of the Corporation.

3. *Annual Premium.* (a) If there is no break in the continuity of participation, any premium adjustment applicable under section 5 of the policy shall be transferred to (1) the contract of the insured's estate or surviving spouse in case of death of the insured, (2) the contract of the person who succeeds the insured if such person had previously participated in the farming operation, or (3) the contract of the same insured who stops farming in one county and starts farming in another county.

(b) If there is a break in the continuity of participation, any reduction in premium earned under section 5 of the policy shall not thereafter apply; *however*, any previous unfavorable insurance experience shall be considered in premium computation following a break in continuity.

4. *Claim for And Payment of Indemnity.* (a) Any claim for indemnity on a unit shall be submitted to the Corporation on a form prescribed by the Corporation.

(b) In determining the total production to be counted for each unit, production from units on which the production has been commingled will be allocated to such units in proportion to the liability on each unit.

(c) There shall be no abandonment to the Corporation of any insured peach acreage.

(d) In the event that any claim for indemnity under the provisions of the contract is denied by the Corporation, an action on such claim may be brought against the Corporation under the provisions of 7 U.S.C. 1508(c): *Provided*, That the same is brought within one year after the date notice of denial of the claim is mailed to and received by the insured.

(e) Any indemnity will be payable within 30 days after a claim for indemnity is approved by the Corporation. *However*, in no event shall the Corporation be liable for interest or damages in connection with any claim for indemnity whether such claim be approved or disapproved by the Corporation.

(f) If the insured is an individual who dies, disappears, or is judicially declared incompetent, or the insured is an entity other than an individual and such entity is dissolved after insurance attaches for any crop year, any indemnity will be paid to the person(s) the Corporation determines to be beneficially entitled thereto.

(g) The Corporation reserves the right to reject any claim for indemnity if any of the requirements of this section or section 8 of the policy are not met and the Corporation determines that the amount of loss cannot be satisfactorily determined.

5. *Subrogation.* The insured (including any assignee or transferee) assigns to the Corporation all rights of recovery against any person for loss or damage to the extent that payment hereunder is made by the Corporation. The Corporation thereafter shall execute all papers required and take appropriate action as may be necessary to secure such rights.

6. *Termination of the Contract.* (a) The contract shall terminate if no premium is earned for five consecutive years.

(b) If the insured is an individual who dies or is judicially declared incompetent, or the insured entity is other than an individual and such entity is dissolved, the contract shall terminate as of the date of death, judicial declaration, or dissolution; *however*, if such event occurs after insurance attaches for any crop year, the contract shall continue in force through such crop year and terminate at the end thereof. Death of a partner in a partnership shall dissolve the partnership unless the partnership agreement provides otherwise. If two or more persons having a joint interest are insured jointly, death of one of the persons shall dissolve the joint entity.

7. *Levels of Insurance.* (a) If the insured has not elected on the application a level of insurance from among those shown on the actuarial table, the level of insurance per acre which shall be applicable under the contract, and which the insured shall be deemed to have elected, shall be as provided on the actuarial table for such purposes.

(b) The insured may, with the consent of the Corporation, change the level of insurance for any crop year on or before the closing date for submitting applications for that crop year.

8. *Assignment of Indemnity.* Upon approval of a form prescribed by the Corporation, the insured may assign to another party the right to an indemnity for the crop year and such assignee shall have the right to submit the loss notices and forms as required by the contract.

9. *Contract Changes.* The Corporation reserves the right to change any terms and provisions of the contract from year to year. Any changes shall be mailed to the insured or placed on file and made available for public inspection in the office for the county at least 15 days prior to the cancellation date preceding the crop year for which the changes are to become effective, and such mailing or filing shall constitute notice to the insured. Acceptance of any changes will be conclusively presumed in the absence of any notice from the insured to cancel contract as provided in section 12 of the policy.

Note.—The reporting requirements contained herein have been aproved by the Office of Management and Budget in accordance with the Federal Reports Act of 1942 and OMB Circular A-40

Approved by the Board of Directors on May 30, 1980.

Peter F. Cole,

Secretary, Federal Crop Insurance Corporation.

Dated: June 23, 1980.

Approved by:

W. Otto Johnson,

Acting Manager.

[FR Doc. 80-19570 Filed 6-27-80; 8:45 am]

BILLING CODE 3410-08-M

---

7 CFR Part 408

Proposed Eastern U.S. Apple Crop Insurance Regulations

AGENCY: Federal Crop Insurance Corporation.

ACTION: Proposed rule.

SUMMARY: This proposed rule prescribes procedures for insuring apples grown in the Eastern United States effective with the 1981 crop year. This rule is a revision of the previous regulations for insuring apples to include several changes and to reissue the regulations in a clearer, shorter, and simpler document which will make the program more effective administratively. This proposed rule is promulgated under the authority of the Federal Crop Insurance Act, as amended.

DATE: Written comments, data, and opinions on this proposed rule must be submitted by not later than August 29, 1980, to be sure of consideration.

ADDRESS: Written comments on this proposed rule should be sent to James D. Deal, Manager, Federal Crop Insurance Corporation, U.S. Department of Agriculture, Washington, D.C., 20250.

FOR FURTHER INFORMATION CONTACT: Peter F. Cole, Secretary, Federal Crop Insurance Corporation, U.S. Department of Agriculture, Washington, D.C., 20250, telephone 202-447-3325.

The Draft Impact Analysis describing the options considered in developing this proposed rule and the impact of implementing each option is available on request from the above-named individual.

SUPPLEMENTARY INFORMATION: This proposed rule has been reviewed under USDA procedures established in Secretary's Memorandum No. 1955, to implement Executive Order No. 12044, and has been classified as "not significant".

Under the authority contained in the Federal Crop Insurance Act, as amended (7 U.S.C. 1501 *et seq.*), the Federal Crop Insurance Corporation (FCIC) proposes to revise and reissue the Eastern United States Apple Crop Insurance Regulations (7 CFR Part 408) as published in the Federal Register on December 9, 1976 (41 FR 53803), as amended December 12, 1979 (44 F.R. 71813), effective for the 1981 crop year.

In addition to shortening and simplifying the regulations, the proposed 7 CFR Part 408 provides (1) for a premium adjustment table that affords up to a 50 percent premium discount for good insuring experience and premium increases for unfavorable insuring experience, in place of the present premium discount system, (2) that any premium not paid by the termination date will be increased by a 9 percent charge, with a 9 percent simple interest charge applying to any unpaid balance at the end of each subsequent 12-month period thereafter, (3) that the contract shall terminate if no premium is earned for 5 consecutive years, (4) that three coverage level options will be offered in each county, with the imposed level being shown on the actuarial table and the conversion level being the one closest to the present percent level for the county, and (5) for unit division by written agreement between the policyholder and the Corporation or by applicable guidelines.

In addition, § 408.5, "Good Faith Reliance on Misrepresentation", of the proposed Eastern United States Apple Crop Insurance Regulations increases the limitation from $5,000 to $20,000 in those cases involving good faith reliance on misrepresentation wherein the Manager of the Corporation (FCIC) is authorized to take action to grant relief.

All previous regulations applicable to insuring apples in the Eastern United States as found in 7 CFR Part 408, as amended, will not be applicable to the 1981 and succeeding apple crops in the Eastern United States but will remain in effect for Federal Crop Insurance Corporation Eastern United States Apple insurance policies issued for the crop years prior to 1981.

All written submissions made pursuant to this notice will be available for public inspection in the Office of the Manager during regular business hours, 8:15 a.m. to 4:45 p.m., Monday through Friday.

Proposed Rule

Accordingly, pursuant to the authority contained in the Federal Crop Insurance Act, as amended (7 U.S.C. 1501 *et seq.*), the Federal Crop Insurance Corporation proposes to revise and reissue the Eastern United States Apple Crop Insurance Regulations effective for the 1981 and succeeding crop years, which shall remain in effect until amended or superseded, to read as follows:

PART 408—EASTERN U.S. APPLE CROP INSURANCE

Subpart—Regulations for the 1981 and Succeeding Crop Years

Sec.

408.1 Availability of Eastern U.S. Apple Insurance.
408.2 Premium rates, production guarantees, coverage levels, and prices at which indemnities shall be computed.
408.3 Public notice of indemnities paid.
408.4 Creditors.
408.5 Good faith reliance on misrepresentation.
408.6 The contract.
408.7 The application and policy.

Authority: Secs. 506, 516, 52 Stat. 73, as amended, 77, as amended (7 U.S.C. 1506, 1516).

Subpart—Regulations for the 1981 and Succeeding Crop Years

§ 408.1 Availability of Eastern U.S. Apple Insurance.

Insurance shall be offered under the provisions of this subpart on apples in counties within limits prescribed by and in accordance with the provisions of the Federal Crop Insurance Act, as amended. The counties shall be designated by the Manager of the Corporation from those approved by the Board of Directors of the Corporation. Before insurance is offered in any county, there shall be published by appendix to this part the names of the counties in which Eastern U.S. apple insurance will be offered.

§ 408.2 Premium rates, production guarantees, coverage levels, and prices at which indemnities shall be computed.

(a) The Manager shall establish premium rates, production guarantees, coverage levels, and prices at which indemnities shall be computed for apples which shall be shown on the county actuarial table on file in the office for the county and may be changed from year to year.

(b) At the time the application for insurance is made, the applicant shall elect a coverage level and price at which indemnities shall be computed from among those levels and prices shown on the actuarial table for the crop year.

§ 408.3 Public notice of indemnities paid.

The Corporation shall provide for posting annually in each county at each county courthouse a listing of the indemnities paid in the county.

§ 408.4 Creditors.

An interest of a person in an insured crop existing by virtue of a lien, mortgage, garnishment, levy, execution, bankruptcy, or an involuntary transfer shall not entitle the holder of the interest to any benefit under the contract except as provided in the policy.

§ 408.5 Good faith reliance on misrepresentation.

Notwithstanding any other provision of the Eastern U.S. apple insurance contract, whenever (a) an insured person under a contract of crop insurance entered into under these regulations, as a result of a misrepresentation or other erroneous action or advice by an agent or employee of the Corporation, (1) is indebted to the Corporation for additional premiums, or (2) has suffered a loss to a crop which is not insured or for which the insured person is not entitled to an indemnity because of failure to comply with the terms of the insurance contract, but which the insured person believed to be insured, or believed the terms of the insurance contract to have been complied with or waived, and (b) the Board of Directors of the Corporation, or the Manager in cases involving not more than $20,000, finds (1) that an agent or employee of the Corporation did in fact make such misrepresentation or take other erroneous action or give erroneous advice, (2) that said insured person relied thereon in good faith, and (3) that to require the payment of the additional premiums or to deny such insured's entitlement to the indemnity would not

be fair and equitable, such insured person shall be granted relief the same as if otherwise entitled thereto.

§ 408.6 The Contract.

The insurance contract shall become effective upon the acceptance by the Corporation of a duly executed application for insurance on a form prescribed by the Corporation. Such acceptance shall be effective upon the date the notice of acceptance is mailed to the applicant. The contract shall cover the apple crop as provided in the policy. The contract shall consist of the application, the policy, the attached appendix, and the provisions of the county actuarial table. Any changes made in the contract shall not affect its continuity from year to year. Copies of forms referred to in the contract are available at the office for the county.

§ 408.7 The application and policy.

(a) Application for insurance on a form prescribed by the Corporation may be made by any person to cover such person's insurable share in the apple crop as landlord, owner-operator, or tenant. The application shall be submitted to the Corporation at the office for the county on or before the applicable closing date on file in the office for the county.

(b) The Corporation reserves the right to discontinue the acceptance of applications in any county upon its determination that the insurance risk involved is excessive, and also, for the same reason, to reject any individual application. The Manager of the Corporation is authorized in any crop year to extend the closing date for submitting applications or contract changes in any county, by placing the extended date on file in the office for the country and publishing a notice in the Federal Register upon the Manager's determination that no adverse selectivity will result during the period of such extension: *Provided, however,* That if adverse conditions should develop during such period, the Corpporation will immediately discontinue that acceptance of applications.

(c) In accordance with the provisions governing changes in the contract contained in policies issued under FCIC regulations for the 1977 and succeeding crop years, a contract in the form provided for under this subpart will come into effect as a continuation of an Eastern U.S. apple contract issued such prior regulations, without the filing of a new application.

(d) The provisions of the application and Eastern U.S. Apple Insurance Policy for the 1981 and succeeding crop years, and the Appendix to the Eastern U.S. Apple Insurance Policy are as follows:

United States Department of Agriculture Federal Crop Insurance Corporation Application for 19 and Succeeding Crop Years Eastern U.S. Apple Crop Insurance Contract

_____

_____

(Contract Number)

_____

_____

(Identification Number)

_____

(Name and Address) (Zip Code)

_____

(County) (State)

Type of entity——— applicant is over 18 Yes——No——

A. The applicant, subject to the provisions of the regulations of the Federal Crop Insurance Corporation (herein called "Croporation"), hereby applies to the Corporation for insurance on the applicant's share in the apples grown on insurable acreage as shown on the county actuarial table for the above-stated county. The applicant elects from the actuarial table the coverage level and price at which indemnities shall be computed. The premium rates and production guarantees shall be those shown on the applicable county actuarial table filed in the office for the county for each crop year. Level Election——— Price Election ———

Example: For the 19—— crop year only (100% share)

Location/ Farm No.	Age of trees	No. of trees peracre	Guarantee per acre*	Premium per acre**	(A)

*Your guarantee will be on a unit basis (acres x per acre guarantee x share).

**Your premium is subject to adjustment in accordance with section 5(c) of the policy.

B. When notice of acceptance of this application is mailed to the applicant by the corporation, the contract shall be in effect for the crop year specified above, unless the time for submitting applications has passed at the time this application is filed, and shall continue for each succeeding crop year until canceled or terminated as provided in the contract. This accepted application, the following Eastern U.S. apple insurance policy, the attached appendix, and the provisions of the county actuarial table showing the production guarantees, coverage levels, premium rates, prices for computing indemnities, and insurable and uninsurable acreage shall constitute the contract. Additional information regarding contract provisions can be found in the county regulations folder on file in the office for the county. No term or condition of the contract shall be waived or changed except in writing by the Corporation.

Signature of applicant: ——— Date:——, 19—.

Code No./witness to signature:———.

Address of office for county: ———

_____

Phone: ———

Location of farm headquarters: ———

_____

Phone: ———

Eastern U.S. Apple Crop Insurance Policy

Terms and Conditions

Subject to the provisions in the attached appendix:

1. *Causes of Loss.* (a) Causes of loss insured against. The insurance provided is against unavoidable loss of production resulting from frost, freeze or hail occurring within the insurance period, subject to any exceptions, exclusions or limitations with respect to causes of loss shown on the actuarial table.

(b) Causes of loss not insured against. The contract shall not cover any loss of production, as determined by the Corporation, (1) to the blossoms or trees, (2) due to the neglect or malfeasance of the insured, any member of the insured's household, the insured's tenants or employees, (3) due to the failure to follow recognized good orchard management practices, or (4) due to any cause not specified as an insured cause in this policy as limited by the actuarial table.

2. *Crop and Acreage Insured.* (a) The crop insured shall be a variety of apples established as adapted to the area, which is located on insured acreage, and for which the acturial table shows a guarantee and premium rate per acre.

(b) The acreage insured for each crop year shall be that acreage of apples located on insurable acreage as shown on the actuarial table, and the insured's share therein as reported by the insured or as determined by the Corporation, whichever the Corporation shall elect: *Provided,* That insurance shall attach or be considered to have attached, as determined by the Corporation, only to acreage on which there are 25 or more bearing trees per acre that have reached the number of growing seasons shown on the actuarial table for this purpose.

3. *Responsibility of Insured to Report Acreage, Share, and Ages and Number of Trees.* The insured, at the time of filing the application shall also file on a form prescribed by the Corporation, a report of (a) all the acreage of insured apples in the county (including a designation of any acreage to which insurance does not attach) in which the insured has a share, (b) the insured's share therein, and (c) the ages and number of trees thereon. Such report shall be revised before insurance attaches for any crop year to reflect any change in acreage, share, and ages or number of trees. The latest report filed shall be considered as the basis for continuation of insurance from year to year.

4. *Production Guarantees, Coverage Levels, and Prices for Computing Indemnities.* (a) For each crop year of the contract, the production guarantees, coverage levels, and prices at which indemnities shall be computed shall be those shown on the actuarial table.

(b) The production guarantee per price acre shall be in bushels as shown on the county actuarial table.

5. *Annual Premium.* (a) The annual premium is earned and payable on the date insurance attaches and the amount thereof shall be determined by multiplying the insured acreage times the production guarantee per acre, times the price election, times the premium percentage rate, times the insured's share at the time insurance attaches, times the applicable premium adjustment percentage in subsection (c) of this section.

(b) For premium adjustment purposes, only the years during which premiums were earned shall be considered.

(c) The premium shall be adjusted as shown in the following table:

BILLING CODE 3410-08-M

% ADJUSTMENTS FOR FAVORABLE CONTINUOUS INSURANCE EXPERIENCE

	Numbers of Years Continuous Experience Through Previous Year															
	0	1	2	3	4	5	6	7	8	9	10	11	12	13	14	15 or more
Loss Ratio 1/ Through Previous Crop Year	Percentage Adjustment Factor For Current Crop Year															
.00 – .20	100	95	95	90	90	85	80	75	70	70	65	65	60	60	55	50
.21 – .40	100	100	95	95	90	90	90	85	80	80	75	75	70	70	65	60
.41 – .60	100	100	95	95	95	95	95	90	90	90	85	85	80	80	75	70
.61 – .80	100	100	95	95	95	95	95	95	90	90	90	90	85	85	85	80
.81 – 1.09	100	100	100	100	100	100	100	100	100	100	100	100	100	100	100	100

% ADJUSTMENTS FOR UNFAVORABLE INSURANCE EXPERIENCE

	Number of Loss Years Through Previous Year 2/															
	0	1	2	3	4	5	6	7	8	9	10	11	12	13	14	15
Loss Ratio 1/ Through Previous Crop Year	Percentage Adjustment Factor For Current Crop Year															
1.10 – 1.19	100	100	100	102	104	106	108	110	112	114	116	118	120	122	124	126
1.20 – 1.39	100	100	100	104	108	112	116	120	124	128	132	136	140	144	148	152
1.40 – 1.69	100	100	100	108	116	124	132	140	148	156	164	172	180	188	196	204
1.70 – 1.99	100	100	100	112	122	132	142	152	162	172	182	192	202	212	222	232
2.00 – 2.49	100	100	100	116	128	140	152	164	176	188	200	212	224	236	248	260
2.50 – 3.24	100	100	100	120	134	148	162	176	190	204	218	232	246	260	274	288
3.25 – 3.99	100	100	105	124	140	156	172	188	204	220	236	252	268	284	300	300
4.00 – 4.99	100	100	110	128	146	164	182	200	218	236	254	272	290	300	300	300
5.00 – 5.99	100	100	115	132	152	172	192	212	232	252	272	292	300	300	300	300
6.00 – Up	100	100	120	136	158	180	202	224	246	268	290	300	300	300	300	300

1/ Loss Ratio means the ratio of indemnity(ies) paid to premium(s) earned.

2/ Only the most recent 15 crop years will be used to determine the number of "Loss Years". (A crop year is determined to be a "Loss Year" when the amount of indemnity for the year exceeds the premium for the year.)

BILLING CODE 3410-08-C

(d) Any amount of premium for an insured crop which is unpaid on the day following the termination date for indebtedness for such crop shall be increased by a 9 percent service fee, which increased amount shall be the premium balance, and thereafter, at the end of each 12-month period, 9 percent simple interest shall attach to any amount of the premium balance which is unpaid: *Provided,* When notice of loss has been timely filed by the insured as provided in section 7 of this policy, the service fee will not be charged and the contract will remain in force if the premium is paid in full within 30 days after the date of approval or denial of the claim for indemnity; *however,* if any premium remains unpaid after such date, the contract will terminate and the amount of premium outstanding shall be increased by a 9 percent service fee, which increased amount shall be the premium balance. If such premium balance is not paid whithin 12 months immediately following the termination date, 9 percent simple interest shall apply from the termination date and each year thereafter to any unpaid premium balance.

(e) Any unpaid amount due the Corporation may be deducted from any indemnity payable to the insured by the Corporation or from any loan or payment to the insured under any Act of Congress or program administered by the U.S. Department of Agriculture, when not prohibited by law.

6. *Insurance Period.* Insurance on insured acreage shall attach on March 1 or upon acceptance of the application, whichever is later, for the first crop year of the contract. For each crop year thereafter, insurance attaches on March 1. Insurance ceases each crop year upon the earliest of (a) harvest, (b) October 15, or (c) total destruction of the insured apple crop.

7. *Notice of Damage or Loss.* (a) Any notice of damage or loss shall be given promptly in writing by the insured to the Corporation at the office for the county.

(b) Notice shall be given for each damage to the apples from an insured cause of loss within seven days after such damage occurs, giving the date, cause, and estimated extent of such damage: *Provided,* That if an indemnity is to be claimed on any unit, the insured shall give written notice thereof to the Corporation at the Office for the county (1) of the intended harvest date at least fifteen days before harvest commences if a final adjustment has not been made on the unit, and (2) immediately if the damage occurs within the fifteen-day period before harvest commences, or during harvest.

(c) In addition to the notices required in subsection (b) of this section, if an indemnity is to be claimed on any unit, the insured shall give written notice thereof to the Corporation at the office for the county not later than *30 DAYS* after the earlier of (1) the calendar date for the end of the insurance period, or (2) the date the entire apple crop on the unit is destroyed, as determined by the Corporation. The Corporation reserves the right to provide additional time if it determines there are extenuating circumstances.

(d) Any insured acreage upon which an indemnity is to be claimed shall be left intact until inspected by the Corporation.

(e) The Corporation may reject any claim for indemnity if any of the requirements of this section are not met.

8. *Claim for Indemnity.* (a) It shall be a condition precedent to the payment of any indemnity that the insured (1) establish that any loss of production was directly caused by one or more of the causes insured against during the insurance period for which the indemnity is claimed and (2) furnish any other information regarding the manner and extent of loss as may be required by the Corporation.

(b) Indemnities shall be determined separately for each unit. The amount of indemnity for any unit shall be determined by (1) multiplying the insured acreage of apples on the unit by the applicable production guarantee per acre, which product shall be the production guarantee for the unit, (2) subtracting therefrom the total production of apples to be counted for the unit, (3) multiplying the remainder by the applicable price for computing indemnities, and (4) multiplying the result obtained in step (3) by the insured share: *Provided,* That if the premium computed on the insured acreage and share is more than the premium computed on the reported acreage and share, the amount of indemnity shall be computed on the insured acreage and share and then reduced proportionately.

(c) The total production to be counted for a unit shall be determined by the Corporation and, subject to the provisions hereinafter, shall include (1) all production harvested before insured damage occurs or harvested prior to an appraisal by the Corporation, (2) all production on the trees at the time of appraisal, (3) any appraisals made by the Corporation for poor farming practices, uninsured causes of loss, or acreage abandoned or put to another use without the consent of the Corporation: *Provided,* That (1) acreage harvested prior to an appraisal by the Corporation, not damaged by an insured cause, abandoned, or put to another use without the consent of the Corporation, shall be appraised at not less than the applicable production guarantee provided on the actuarial table, and (2) any apple which is reduced in grade due to an insured cause of loss, as determined by the Corporation, below U. S. No. 1, as defined in the United States Standards for Apples for Processing, shall not be counted as production.

9. *Misrepresentation and Fraud.* The Corporation may void the contract without affecting the insured's liability for premiums or waiving any right, including the right to collect any unpaid premiums if, at any time, the insured has concealed or misrepresented any material fact or committed any fraud relating to the contract, and such voidance shall be effective as of the beginning of the crop year with respect to which such act or omission occurred.

10. *Transfer of Insured Share.* If the insured transfers any part of the insured share during the crop year, protection will continue to be provided according to the provisions of the contract to the transferee for such crop year on the transferred share, and the transferee shall have the same rights and responsibilities under the contract as the original insured for the current crop year. Any transfer shall be made on an approved form.

11. *Records and Access to Farm.* The insured shall keep or cause to be kept for two years after the time of loss, records of the harvesting, storage, shipments, sale or other disposition of all apples produced on each unit including separate records showing the same information for production from any uninsured acreage. Any persons designated by the Corporation shall have access to such records and the farm for purposes related to the contract.

12. *Life of Contract:* Cancellation and Termination. (a) The contract shall be in effect for the crop year specified on the application and may not be canceled for such crop year. Thereafter, either party may cancel the insurance for any crop year by giving a signed notice to the other on or before the cancellation date preceding such crop year.

(b) Except as provided in section 5(d) of this policy, the contract will terminate as to any crop year if any amount due the Corporation under this contract is not paid on or before the termination date for indebtedness preceding such crop year: *Provided,* That the date of payment for premium (1) if deducted from an indemnity claim shall be the date the insured signs such claim or (2) if deducted from payment under another program administered by the U.S. Department of Agriculture shall be the date such payment was approved.

(c) Following are the cancellation and termination dates:

State	Cancellation date	Termination date for indebtedness
All counties	Dec. 31.	Feb. 15.

(d) In the absence of a notice from the insured to cancel, and subject to the provisions of subsections (a), (b), and (c) of this section, and section 6 of the Appendix, the contract shall continue in force for each succeeding crop year.

Appendix (Additional Terms and Conditions)

1. Meaning of Terms. For the purposes of Eastern U.S. apple crop insurance:

(a) "Actuarial table" means the forms and related material for the crop year approved by the Corporation which are on file for public inspection in the office for the county, and which show the production guarantees, coverage levels, premium percentage rate, prices for computing indemnities, insurable and uninsurable acreage, and related information regarding apple insurance in the county.

(b) "Contiguous land" means land which is touching at any point, except that land which is separated by only a public or private right-or-way shall be considered contiguous.

(c) "County" means the Eastern U.S. county shown on the application and any additional land located in a local producing area bordering on the county, as shown on the actuarial table.

(d) "Crop year" means the period beginning with the date insurance attaches to the apple crop and extending through normal harvest time and shall be designated by the calender year in which the apples are normally harvested.

(e) "Eastern U.S." means those states east of a line extending north-south along the eastern state boundaries of North Dakota, South Dakota, Nebraska, Kansas, Oklahoma and Texas.

(f) "Harvest" means the picking of marketable apples from the trees or from the ground.

(g) "Insurable acreage" means the land classified as insurable by the Corporation and shown as such on the county actuarial table.

(h) "Insured" means the person who submitted the application accepted by the Corporation.

(i) "Office for the county" means the Corporation's office serving the county shown on the application for insurance or such office as may be designated by the Corporation.

(j) "Person" means an individual, partnership, association, corporation, estate, trust, or other business enterprise or legal entity, and wherever applicable, a State, a political subdivision of a State, or any agency thereof.

(k) "Share" means the interest of the insured as landlord, owner-operator, or tenant in the insured apple crop at the time insurance attaches as reported by the insured or as determined by the Corporation, whichever the Corporation shall elect, and no other share shall be deemed to be insured: *Provided*, That for the purpose of determining the amount of indemnity, the insured share shall not exceed the insured's share at the earliest of (1) the date of beginning of harvest on the unit, (2) the calender date for the end of the insurance period, or (3) the date the entire crop on the unit is destroyed, as determined by the Corporation.

(l) "Tenant" means a person who rents land from another person for a share of the apple crop or proceeds therefrom.

(m) "Unit" means all insurable acreage of apples in the county which is located on contiguous land, and, at the time insurance attaches for the crop year, (1) in which the insured has a 100 percent share, or (2) which is owned by one entity and operated by another entity on a share basis. Land rented for cash, a fixed commodity payment, or any consideration other than a share in the apple crop on such land shall be considered as owned by the lessee. Land which would otherwise be one unit may be divided according to applicable guidelines on file in the office for the county or by written agreement between the Corporation and the insured. The Corporation shall determine unit as herein defined when adjusting a loss, notwithstanding what is shown on the acreage report, and has the right to consider any acreage and share reported by or for the insured's spouse or child or any member of the insured's household to be the bona fide share of the insured or any other person having the bona fide share.

2. *Acreage Insured.* (a) The Corporation reserves the right to limit the insured acreage of apples to any acreage limitations established under any Act of Congress, provided the insured is so notified in writing prior to the time insurance attaches.

(b) If the insured does not submit an acreage report on or before the acreage reporting date on file in the office for the county, the Corporation may elect to determine by units the insured acreage, share, and age and number of trees, or declare the insured acreage on any unit(s) to be "zero". If the insured does not have a share in any insured acreage in the county for any year, the insured shall submit a report so indicating. Any acreage report submitted by the insured may be revised only upon approval of the Corporation.

3. *Annual Premium.* (a) If there is no break in the continuity of participation, any premium adjustment applicable under section 5 of the policy shall be transferred to (1) the contract of the insured's estate or surviving spouse in case of death of the insured, (2) the contract of the person who succeeds the insured if such person had previously participated in the farming operation, or (3) the contract of the same insured who stops farming in one county and starts farming in another county.

(b) If there is a break in the continuity of participation, any reduction in premium earned under section 5 of the policy shall not thereafter apply; *however*, any previous unfavorable insurance experience shall be considered in premium computation following a break in continuity.

4. *Claim for And Payment of Indemnity.* (a) Any claim for indemnity on a unit shall be submitted to the Corporation on a form prescribed by the Corporation.

(b) In determining the total production to be counted for each unit, production from units on which the production has been commingled will be allocated to such units in proportion to the liability on each unit.

(c) There shall be no abandonment to the Corporation of any insured apple acreage.

(d) In the event that any claim for indemnity under the provisions of the contract is denied by the Corporation, an action on such claim may be brought against the Corporation under the provisions of 7 U.S.C. 1508(c): *Provided*. That the same is brought within one year after the date notice of denial of the claim is mailed to and received by the insured.

(e) Any indemnity will be payable within 30 days after a claim for indemnity is approved by the Corporation. *However*, in no event shall the Corporation be liable for interest or damages in connection with any claim for indemnity whether such claim be approved or disapproved by the Corporation.

(f) If the insured is an individual who dies, disappears, or is judicially declared incompetent, or the insured is an entity other than an individual and such entity is dissolved after insurance attaches for any crop year, any indemnity will be paid to the person(s) the Corporation determines to be beneficially entitled thereto.

(g) The Corporation reserves the right to reject any claim for indemnity if any of the requirements of this section or section 8 of the policy are not met and the Corporation determines that the amount of loss cannot be satisfactorily determined.

5. *Subrogation.* The insured (including any assignee or transferee) assigns to the Corporation all rights of recovery against any person for loss or damage to the extent that payment hereunder is made by the Corporation. The Corporation thereafter shall execute all papers required and take appropriate action as may be necessary to secure such rights.

6. *Termination of the Contract.* (a) The contract shall terminate if no premium is earned for five consecutive years.

(b) If the insured is an individual who dies or is judicially declared incompetent, or the insured entity is other than an individual and such entity is dissolved, the contract shall terminate as of the date of death, judicial declaration, or dissolution; *however*, if such event occurs after insurance attaches for any crop year, the contract shall continue in force through such crop year and terminate at the end thereof. Death of a partner in a partnership shall dissolve the partnership unless the partnership agreement provides otherwise. If two or more persons having a joint interest are insured jointly, death of one of the persons shall dissolve the joint entity.

7. *Coverage Level and Price Election.* (a) If the insured has not elected on the application a coverage level and price at which indemnities shall be computed from among those shown on the actuarial table, the coverage level and price election which shall be applicable under the contract, and which the insured shall be deemed to have elected, shall be as provided on the actuarial table for such purposes.

(b) The insured may, with the consent of the Corporation, change the coverage level and/or price election for any crop year on or before the closing date for submitting applications for that crop year.

8. *Assignment of Indemnity.* Upon approval of a form prescribed by the Corporation, the insured may assign to another party the right to an indemnity for the crop year and such assignee shall have the right to submit the loss notices and forms as required by the contract.

9. *Contract Changes.* The Corporation reserves the right to change any terms and provisions of the contract from year to year. A changes shall be mailed to the insured or placed on file and made available for public inspection in the office for the county at least 15 days prior to the cancellation date preceding the crop year for which the changes are to become effective, and such mailing or filing shall constitute notice to the insured. Acceptance of any changes will be conclusively presumed in the absence of any notice from the insured to cancel the contract as provided in section 12 of the policy.

Note.—The reporting requirements contained herein have been approved by the Office of Management and Budget in accordance with the Federal Reports Act of 1942 and OMB Circular A-40.

Approved by the Board of Directors on May 30, 1980.

Peter F. Cole,

Secretary, Federal Crop Insurance Corporation.

Approved by:

W. Otto Johnson,

Acting Manager.

Dated: June 23, 1980.

[FR Doc. 80-19571 Filed 6-27-80; 8:45 am]

BILLING CODE 3410-08-M

7 CFR Part 438

Proposed Canning and Processing Tomato Crop Insurance Regulations

AGENCY: Federal Crop Insurance Corporation, USDA.

ACTION: Proposal rule.

SUMMARY: This proposed rule prescribes procedures for insuring canning and processing tomatoes effective with the 1981 crop year. This rule combines provisions from previous regulations for insuring tomatoes in a shorter, clearer, and simpler document which will make it easier to administer the program. This rule is promulgated under the authority contained in the Federal Crop Insurance Act, as amended.

DATE: Written comments, data, and opinions must be submitted not later than August 29, 1980, to be sure of consideration.

ADDRESS: Written comments on this proposed rule should be sent to James D. Deal, Manager, Federal Crop Insurance Corporation, U.S. Department of Agriculture, Washington, D.C. 20250.

FOR FURTHER INFORMATION CONTACT: Peter F. Cole, Secretary, Federal Crop Insurance Corporation, U.S. Department of Agriculture, Washington, D.C. 20250, telephone 202-447-3325.

The Draft Impact Analysis describing the options considered in developing this proposed rule and the impact of implementing each option is available on request from the above-named individual.

SUPPLEMENTARY INFORMATION: This proposed action has been reviewed under USDA procedures established in Secretary's Memorandum No. 1955 to implement Executive Order No. 12044, and has been classified as "not significant".

Under the authority contained in the Federal Crop Insurance Act, as amended (7 U.S.C. 1501 *et seq.*), it is proposed that there be established a new Part 438 of Chapter IV in Title 7 of the Code of Federal Regulations to be known as 7 CFR Part 438 Canning and Processing Tomato Crop Insurance Regulations. This part describes procedures for insuring tomatoes effective with the 1981 corp year.

All previous regulations applicable to insuring tomatoes as found in 7 CFR 401.101-401.111, and 401.137 (33 FR 12665, September 6, 1968), as amended (43 FR 2379, Tuesday, January 17, 1978), will not be applicable to 1981 and succeeding tomato crops but will remain in effect for Federal Crop Insurance (FCIC) tomato insurance policies issued for crop years prior to 1981.

It has been determined that combining all previous regulations for insuring tomato crops into one shortened, simplified, and clearer regulation would be easier to administer, while at the same time providing fewer documents for the policyholder to be concerned with.

In addition, proposed 7 CFR Part 438 provides (1) for a premium adjustment table that provides for up to 50 percent premium discount for good insuring experience and premium increases for unfavorable insuring experience, which replaces the present premium discount system, (2) that any premium not paid by the termination date will be increased by a 9 percent charge, with a 9 percent simple interest applying to any balance at the end of each subsequent 12-month period thereafter, (3) that the period for submitting a notice of damage or loss is extended from 15 days to 30 days and eliminates the 60-day period for filing a claim, (4) that three coverage level options be offered in each county with the imposed level being provided on the actuarial and the conversion level being closest to the present level for the county, and (5) that the termination date for California is January 31 instead of February 20, which sets the date for termination of the contract for nonpayment of premium 20 days earlier. The termination date for Ohio and all other States is March 31 instead of May 10, which sets the date for termination of the contract for nonpayment of premium 40 days earlier.

In addition, § 438.5 of the proposed Canning and Processing Tomato Crop Insurance Regulations, titled "Good Faith Reliance on Misrepresentation," reflects an increase in limitation from $5,000 to $20,000 in those cases involving good faith reliance on misrepresentation wherein the Manager of the Corporation (FCIC) is authorized to take action to grant relief.

All written submissions made pursuant to this notice will be available for public inspection in the Office of the Manager during regular business hours, 8:15 a.m. to 4:45 p.m., Monday through Friday.

Proposed Rule

Accordingly, pursuant to the authority contained in the Federal Crop Insurance Act, as amended (7 U.S.C 1501 *et seq.*), the Federal Crop Insurance Act, Corporation proposes to delete and reserve 7 CFR 401.137, but these provisions shall remain in effect for FCIC tomato insurance policies issued for crop years prior to 1981. The Corporation also proposes to issue a new Part 438 in Chapter IV of Title 7 of the Code of Federal Regulations effective with the 1981 and subsequent crop years, which shall remain in effect until amended or superseded, to read as set forth below:

1. Section 401.137 is deleted in its entirety.

2. New Part 438 is proposed to be added to read as set forth below:

PART 438—TOMATO CROP INSURANCE

Subpart—Regulations for the 1981 and Succeeding Crop Years

Sec.
438.1 Availability of tomato insurance.
438.2 Premium rates, production guarantees, coverage levels, and prices at which indemnities shall be computed.
438.3 Public notice of indemnities paid.
438.4 Creditors.
438.5 Good faith reliance on misrepresentation.
438.6 The contract.
438.7 The application and policy.

Authority: Secs. 506, 516, 52 Stat. 73, as amended, 77, as amended (7 U.S.C. 1506, 1516).

Subpart—Regulations for the 1981 and Succeeding Crop Years

§ 438.1 Availability of tomato insurance.

Insurance shall be offered under the provisions of this subpart on tomatoes in counties within limits prescribed by an in accordance with the provisions of the Federal Crop Insurance Act, as amended. The counties shall be designated by the Manager of the Corporation from those approved by the Board of Directors of the Corporation. Before insurance is offered in any county, there shall be published by appendix to this part the names of the counties in which tomato insurance will be offered.

§ 438.2 Premium rates, production guarantees, coverage levels, and prices at which indemnities shall be computed.

(a) The Manager shall establish premium rates, production guarantees,

coverage levels and prices at which indemnities shall be computed for tomatoes which shall be shown on the county actuarial table on file in the office for the county and may be changed from year to year.

(b) At the time the application for insurance is made, the applicant shall elect a coverage level and price at which indemnities shall be computed from among those levels and prices shown on the actuarial table for the crop year.

§ 438.3 Public notice of indemnities paid.

The Corporation shall provide for posting annually in each county at each county courthouse a listing of the indemnities paid in the county.

§ 438.4 Creditors.

An interest of a person in an insured crop existing by virtue of a lien, mortgage, garnishment, levy, execution, bankruptcy, or an involuntary transfer shall not entitle the holder of the interest to any benefit under the contract except as provided in the policy.

§ 438.5 Good faith reliance on misrepresentation.

Notwithstanding any other provision of the tomato insurance contract, whenever (a) an insured person under a contract of crop insurance entered into under these regulations, as a result of a misrepresentation or other erroneous action or advice by an agent or employee of the Corporation, (1) is indebted to the Corporation for additional premiums, or (2) has suffered a loss to a crop which is not insured or for which the insured person is not entitled to an indemnity because of failure to comply with the terms of the insurance contract, but which the insured person believed to be insured, or believed the terms of the insurance contract to have been complied with or waived, and (b) the Board of Directors of the Corporation, or the Manager in cases involving not more than $20,000, finds (1) that an agent or employee of the Corporation did in fact make such misrepresentation or take other erroneous action or give erroneous advice, (2) that said insured person relied thereon in good faith, and (3) that to require the payment of the additional premiums or to deny such insured's entitlement to the indemnity would not be fair and equitable, such insured person shall be granted relief the same as if otherwise entitled thereto.

§ 438.6 The contract.

The insurance contract shall become effective upon the acceptance by the Corporation of a duly executed application for insurance on a form prescribed by the Corporation. Such acceptance shall be effective upon the date the notice of acceptance is mailed to the applicant. The contract shall cover the tomato crop as provided in the policy. The contract shall consist of the application, the policy, the attached appendix, and the provisions of the county actuarial table. Any changes made in the contract shall not affect its continuity from year to year. Copies of forms referred to in the contract are available at the office for the county.

§ 438.7 The application and policy.

(a) Application for insurance on a form prescribed by the Corporation may be made by any person to cover such person's insurable share in the tomato crop as landlord, owner-operator, or tenant. The application shall be submitted to the Corporation at the office for the county on or before the applicable closing date on file in the office for the county.

(b) The Corporation reserves the right to discontinue the acceptance of applications in any county upon its determination that the insurance risk involved is excessive, and also, for the same reason, to reject any individual application. The Manager of the Corporation is authorized in any crop year to extend the closing date for submitting applications or contract changes in any county, by placing the extended date on file in the office for the county and publishing a notice in the Federal Register upon the Manager's determination that no adverse selectivity will result during the period of such extension: *Provided, however,* That if adverse conditions should develop during such period, the Corporation will immediately discontinue the acceptance of applications.

(c) In accordance with the provisions governing changes in the contract contained in policies issued under FCIC regulations for the 1969 and succeeding crop years, a contract in the form provided for under this subpart will come into effect as a continuation of a canning and processing tomato contract issued under such prior regulations, without the filing of a new application.

(d) The provisions of the application and Tomato Insurance Policy for the 1981 and succeeding crop years, and the Appendix to the Tomato Insurance Policy are as follows:

United States Department of Agriculture

Federal Crop Insurance Corporation

Application for 19—And Succeeding Crop Years; Tomato Crop Insurance Contract

..... (Contract Number)

..... (Identification Number)

..... (Name and Address) (Zip Code) ..... (County) ..... (State)

Type of Entity _____

Applicant is Over 18 Yes— No—

A. The applicant, subject to the provisions of the regulations of the Federal Crop Insurance Corporation (herein called "Corporation"), hereby applies to the Corporation for insurance on the applicant's share in the tomatoes planted on insurable acreage as shown on the county actuarial table for the above-stated county. The applicant elects from the actuarial table the coverage level and price at which indemnities shall be computed. The premium rates and production guarantees shall be those shown on the applicable county actuarial table filed in the office for the county for each crop year.

Level Election _____

Price Election _____

Example: For the 19— Crop Year Only (100% Share)

Location/ Farm No.	Guarantee per acre*	Premium per acre**	Practice

*Your guarantee will be on a unit basis (acres × per acre guarantee × share).

**Your premium is subject to adjustment in accordance with section 5(c) of the policy.

B. When notice of acceptance of this application is mailed to the applicant by the Corporation, the contract shall be in effect for the crop year specified above, unless the time for submitting applications has passed at the time this application is filed, and shall continue for each succeeding crop year until canceled or terminated as provided in the contract. This accepted application, the following canning and processing tomato insurance policy, the attached appendix, and the provisions of the county actuarial table showing the production guarantees, coverage levels, premium rates, prices for computing indemnities, and insurable and uninsurable acreage shall constitute the contract. Additional information regarding contract provisions can be found in the county regulations folder on file in the office for the county. No term or condition of the contract shall be waived or changed except in writing by the Corporation.

(Signature of Applicant)_____

(Date)_____, 19—

(Code No./Witness to Signature)_____

Address of Office for County: _____

Phone_____

Location of Farm Headquarters: _____

Phone_____

Canning and Processing Tomato Crop Insurance Policy

Terms and Conditions

Subject to the provisions in the attached appendix:

1. *Causes of Loss.* (a) Causes of loss insured against. The insurance provided is against unavoidable loss of production resulting from adverse weather conditions, heat, insects, plant disease, wildlife, earthquake or fire occurring within the insurance period, subject to any exceptions, exclusions or limitations with respect to causes of loss shown on the actuarial table.

(b) Causes of loss not insured against. The contract shall not cover any loss of production, as determined by the Corporation, due to (1) the neglect or malfeasance of the insured, any member of the insured's household, the insured's tenants or employees, (2) failure to follow recognized good farming practices, (3) damage resulting from the backing up of water by any governmental or public utilities dam or reservoir project, (4) failure to market the tomatoes when such failure is not due to an insured cause of loss, or (5) any cause not specified as an insured cause in this policy as limited by the actuarial table.

2. *Crop and Acreage Insured.* (a) The crop insured shall be tomatoes for canning or processing grown on insured acreage under a contract executed with a canner or processor on or before the acreage to be insured is reported, for which the actuarial table shows a guarantee and premium rate per acre.

(b) The acreage insured for each crop year shall be that acreage planted to tomatoes on insurable acreage as shown on the actuarial table, and the insured's share therein as reported by the insured or as determined by the Corporation, whichever the Corporation shall elect: *Provided,* That insurance shall not attach or be considered to have attached, as determined by the Corporation, to any acreage (1) which is not grown under a contract with a canner or processor or which is excluded from such contract for the crop year pursuant to the terms thereof, (2) where premium rates are established by farming practices on the actuarial table, and the farming practices carried out on any acreage are not among those for which a premium rate has been established, (3) not reported for insurance as provided in section 3 if such acreage is irrigated and an irrigated practice is not provided for such acreage on the actuarial table, (4) which is destroyed and after such destruction it was practical to replant to tomatoes and such acreage was not replanted, (5) initially planted after the date on file in the office for the county which has been established by the Corporation as being too late to initially plant and expect a normal crop to be produced, (6) planted to a type or variety of tomatoes not established as adapted to the area or shown as noninsurable on the actuarial table, or (7) planted for the development or production of hybrid seed or for experimental purposes.

3. *Responsibility of Insured To Report Acreage and Share.* The insured shall submit to the Corporation on a form prescribed by the Corporation, a report showing (a) all acreage of tomatoes planted in the county (including a designation of any acreage to which insurance does not attach) in which the insured has a share and (b) the insured's share therein at the time of planting. In California, a report of the preceding year's insurable acreage and the tonnage produced therefrom shall also be provided by the insured on a form prescribed by the Corporation when the acreage report for the current year is submitted. Such report(s) shall be submitted each year not later than the acreage reporting date on file in the office for the county.

4. *Production Guarantees, Coverage Levels, and Prices for Computing Indemnities.* (a) For each crop year of the contract, the production guarantees, coverage levels, and prices at which indemnities shall be computed shall be those shown on the actuarial table.

(b) The production guarantees per acre are progressive by periods as shown on the county actuarial table with such production guarantees increasing on specified dates up to the maximum production guarantee for harvested tomato acreage.

(c) Notwithstanding section 8 of this policy, or any other provisions of the contract, any acreage on which the tomato crop is damaged, as determined by the Corporation, to the extent that growers in the area generally would not further care for the crop shall be deemed to have been destroyed at the time of such damage even though the tomato crop is further cared for by the insured. Subject to section 8 of this policy, the production guarantee applicable to any acreage shall be that established for the period in which such destruction occurs, as determined by the Corporation, and the production guarantee for the final period shall apply only to harvested acreage.

5. *Annual Premium.* (a) The annual premium is earned and payable at the time of planting and the amount thereof shall be determined by multiplying the insured acreage times the applicable premium per acre, times the insured's share at the time of planting, times the applicable premium adjustment percentage in subsection (c) of this section.

(b) For premium adjustment purposes, only the years during which premiums were earned shall be considered.

(c) The premium shall be adjusted as shown in the following table:

BILLING CODE 3410-08-M

% ADJUSTMENTS FOR FAVORABLE CONTINUOUS INSURANCE EXPERIENCE

	Numbers of Years Continuous Experience Through Previous Year															
	0	1	2	3	4	5	6	7	8	9	10	11	12	13	14	15 or more
Loss Ratio 1/ Through Previous Crop Year	Percentage Adjustment Factor For Current Crop Year															
.00 – .20	100	95	95	90	90	85	80	75	70	70	65	65	60	60	55	50
.21 – .40	100	100	95	95	90	90	90	85	80	80	75	75	70	70	65	60
.41 – .60	100	100	95	95	95	95	95	90	90	90	85	85	80	80	75	70
.61 – .80	100	100	95	95	95	95	95	95	90	90	90	90	85	85	85	80
.81 – 1.09	100	100	100	100	100	100	100	100	100	100	100	100	100	100	100	100

% ADJUSTMENTS FOR UNFAVORABLE INSURANCE EXPERIENCE

	Number of Loss Years Through Previous Year 2/															
	0	1	2	3	4	5	6	7	8	9	10	11	12	13	14	15
Loss Ratio 1/ Through Previous Crop Year	Percentage Adjustment Factor For Current Crop Year															
1.10 – 1.19	100	100	100	102	104	106	108	110	112	114	116	118	120	122	124	126
1.20 – 1.39	100	100	100	104	108	112	116	120	124	128	132	136	140	144	148	152
1.40 – 1.69	100	100	100	108	116	124	132	140	148	156	164	172	180	188	196	204
1.70 – 1.99	100	100	100	112	122	132	142	152	162	172	182	192	202	212	222	232
2.00 – 2.49	100	100	100	116	128	140	152	164	176	188	200	212	224	236	248	260
2.50 – 3.24	100	100	100	120	134	148	162	176	190	204	218	232	246	260	274	288
3.25 – 3.99	100	100	105	124	140	156	172	188	204	220	236	252	268	284	300	300
4.00 – 4.99	100	100	110	128	146	164	182	200	218	236	254	272	290	300	300	300
5.00 – 5.99	100	100	115	132	152	172	192	212	232	252	272	292	300	300	300	300
6.00 – Up	100	100	120	136	158	180	202	224	246	268	290	300	300	300	300	300

1/ Loss Ratio means the ratio of indemnity(ies) paid to premium(s) earned.

2/ Only the most recent 15 crop years will be used to determine the number of "Loss Years". (A crop year is determined to be a "Loss Year" when the amount of indemnity for the year exceeds the premium for the year.)

BILLING CODE 3410-08-C

(d) Any amount of premium for an insured crop which is unpaid on the day following the termination date for indebtedness for such crop shall be increased by a 9 percent service fee, which increased amount shall be the premium balance, and thereafter, at the end of each 12-month period, 9 percent simple interest shall attach to any amount of the premium balance which is unpaid: *Provided,* When notice of loss has been timely filed by the insured as provided in section 7 of this policy, the service fee will not be charged and the contract will remain in force if the premium is paid in full within 30 days after the date of approval or denial of the claim for indemnity; *however,* if any premium remains unpaid after such date, the contract will terminate and the amount of premium outstanding shall be increased by a 9 percent service fee, which increased amount shall be the premium balance. If such premium balance is not paid within 12 months immediately following the termination date, 9 percent simple interest shall apply from the termination date and each year thereafter to any unpaid premium balance.

(e) Any unpaid amount due the Corporation may be deducted from any indemnity payable to the insured by the Corporation or from any loan or payment to the insured under any Act of Congress or program administered by the U.S. Department of Agriculture, when not prohibited by law.

6. *Insurance Period.* Insurance on insured acreage shall attach at the time the tomatoes are planted and shall cease upon the earliest of (a) final adjustment of a loss, (b) harvest or removal of the tomatoes from the field, (c) when the crop is deemed destroyed and it is not practical to replant by the date shown on the actuarial table, or (d) October 20 in California and October 10 in all other States of the calendar year in which the tomatoes are normally harvested.

7. *Notice of Damage or Loss.* (a) Any notice of damage or loss shall be given promptly in writing by the insured to the Corporation at the office for the county.

(b) Notice shall be given promptly if, during the period before harvest, the tomatoes on any unit are damaged to the extent that the insured does not expect to further care for the crop or harvest any part of it, or if the insured wants the consent of the Corporation to put the acreage to another use. No insured acreage shall be put to another use until the Corporation has made an appraisal of the potential production of such acreage and consents in writing to such other use. Such consent shall not be given until it is too late or impractical to replant to tomatoes. Notice shall also be given when such acreage has been put to another use.

(c) If an indemnity is to be claimed on a unit, the insured shall give written notice thereof to the Corporation at the office for the county immediately: (1) after harvest is completed on the unit, (2) if harvesting is discontinued on any acreage before the entire crop production is harvested, (3) at any time when harvest should be in progress on any unit if the insured does not expect to harvest, or (4) if the insured is unable to deliver production to the canner or processor.

(d) In addition to the notices required in subsections (b) and (c) of this section, written notice shall be given not later than 30 days after the earlier of (1) the calendar date for the end of the insurance period, or (2) the date the entire tomato crop on the unit is destroyed, as determined by the Corporation. The Corporation reserves the right to provide additional time if it determines there are extenuating circumstances.

(e) The tomato vines on any hand harvested insured acreage with respect to which an indemnity is to be claimed shall not be destroyed until inspected by the Corporation.

(f) Any insured acreage which is not to be harvested and upon which an indemnity is to be claimed shall be left intact until inspected by the Corporation.

(g) The Corporation may reject any claim for indemnity if any of the requirements of this section are not met.

8. *Claim for Indemnity.* (a) It shall be a condition precedent to the payment of any indemnity that the insured (1) establish the total production of tomatoes on the unit and that any loss of production was directly caused by one or more of the insured causes during the insurance period for the crop year for which the indemnity is claimed and (2) furnish any other information regarding the manner and extent of loss as may be required by the Corporation.

(b) Indemnities shall be determined separately for each unit. The amount of indemnity for any unit shall be determined by (1) multiplying the insured acreage of tomatoes on the unit by the applicable production guarantee per acre, which product shall be the production guarantee for the unit, (2) subtracting therefrom the total production of tomatoes to be counted for the unit, (3) multiplying the remainder by the applicable price for computing indemnities, and (4) multiplying the result obtained in step (3) by the insured share: *Provided,* That if the premium computed on the reported acreage and share is more than the premium computed on the insured acreage and share, the amount of indemnity shall be computed on the insured acreage and share and then reduced proportionately.

(c) The total production to be counted for a unit shall be determined by the Corporation and, subject to the provisions hereinafter, shall include: (1) all production marketed, (2) any appraisals made by the Corporation for potential production on harvested acreage, uninsured causes, poor farming practices, and for production which would meet the quality requirements of the processor contract referred to in section 2 if such tomatoes had been timely marketed, (3) not less than the applicable guarantee for any acreage which is abandoned or put to another use without prior written consent of the Corporation or damaged solely by an uninsured cause, and (4) only the appraisal in excess of the difference between the production guarantee applicable for such acreage and the production guarantee applicable for the final period for all other unharvested acreage.

(d) The appraised potential production for acreage for which consent has been given to be put to another use shall be counted as production in determining the amount of loss under the contract. *However,* if consent is given to put acreage to another use and the Corporation determines that any such acreage (1) is not put to another use before harvest of tomatoes becomes general in the county, (2) is harvested, or (3) is further damaged by an insured cause before the acreage is put to another use, the indemnity for the unit shall be determined without regard to such appraisal and consent.

9. *Misrepresentation and Fraud.* The Corporation may avoid the contract without affecting the insured's liability for premiums or waiving any right, including the right to collect any unpaid premiums if, at any time, the insured has concealed or misrepresented any material fact or committed any fraud relating to the contract, and such voidance shall be effective as of the beginning of the crop year with respect to which such act or omission occurred.

10. *Transfer of Insured Share.* If the insured transfers any part of the insured share during the crop year, protection will continue to be provided according to the provisions of the contract to the transferee for such crop year on the transferred share, and the transferee shall have the same rights and responsibilities under the contract as the original insured for the current crop year. Any transfer shall be made on an approved form.

11. *Records and Access to Farm.* The insured shall keep or cause to be kept for two years after the time of loss, records of the harvesting, storage, shipments, sale or other disposition of all tomatoes produced on each unit including separate records showing the same information for production from any uninsured acreage. Any persons designated by the Corporation shall have access to such records and the farm for purposes related to the contract.

12. *Life of Contract:* Cancellation and Termination. (a) The contract shall be in effect for the crop year specified on the application and may not be canceled for such crop year. Thereafter, either party may cancel the insurance for any crop year by giving a signed notice to the other on or before the cancellation date preceding such crop year.

(b) Except as provided in section 5(d) of this policy, the contract will terminate as to any crop year if any amount due the Corporation under this contract is not paid on or before the termination date for indebtedness preceding such crop year: *Provided,* That the date of payment for premium (1) if deducted from an indemnity claim shall be the date the insured signs such claim or (2) if deducted from payment under another program administered by the U.S. Department of Agriculture shall be the date such payment was approved.

(c) Following are the cancellation and termination dates:

State	Cancellation date	Termination date for indebtedness
California	Dec. 31	Jan. 31.
Ohio and other States	Dec. 31	Mar. 31.

(d) In the absence of a notice from the insured to cancel, and subject to the provisions of subsections (a), (b), and (c) of this section, and section 7 of the Appendix, the contract shall continue in force for each succeeding crop year.

Appendix (Additional Terms and Conditions)

1. *Meaning of terms.* For the purposes of tomato crop insurance:

(a) "Actuarial table" means the forms and related material for the crop year approved by the Corporation which are on file for public inspection in the office for the county, and which show the production guarantees, coverage levels, premium rates, prices for computing indemnities, insurable and uninsurable acreage, and related information regarding tomato insurance in the county.

(b) "County" means the county shown on the application and any additional land located in a local producing area bordering on the county, as shown on the actuarial table.

(c) "Crop year" means the period within which the tomato crop is normally grown and shall be designated by the calendar year in which the tomato crop is normally harvested.

(d) "Harvest" or "harvested" as to any insured acreage not deemed to have been destroyed earlier, means severance of tomatoes from the vines and delivery of such tomatoes under the insured's contract with a canner or processor. *However,* for the purpose of determining the applicable guarantee per acre, acreage in excess of 10% of the acreage for the unit from which no tomatoes are accepted by the canner or processor shall not be deemed to have been harvested.

(e) "Insurable acreage" means the land classified as insurable by the Corporation and shown as such on the county actuarial table.

(f) "Insured" means the person who submitted the application accepted by the Corporation.

(g) "Office for the county" means the Corporation's office serving the county shown on the application for insurance or such office as may be designated by the Corporation.

(h) "Person" means an individual, partnership, association, corporation, estate, trust, or other business enterprise or legal entity, and wherever applicable, a State, a political subdivision of a State, or any agency thereof.

(i) "Share" means the interest of the insured as landlord, owner-operator, or tenant in the insured tomato crop at the time of planting as reported by the insured or as determined by the Corporation, whichever the Corporation shall elect, and no other share shall be deemed to be insured: *Provided,* That for the purpose of determining the amount of indemnity, the insured share shall not exceed the insured's share at the earliest of (1) the date of beginning of harvest on the unit, (2) the calendar date for the end of the insurance period, or (3) the date the entire crop on the unit is destroyed, as determined by the Corporation.

(j) "Tenant" means a person who rents land from another person for a share of the tomato crop or proceeds therefrom.

(k) "Unit" means all insurable acreage of tomatoes in the county on the date of planting for the crop year (1) in which the insured has a 100 percent share, or (2) which is owned by one entity and operated by another entity on a share basis. Land rented for cash, a fixed commodity payment, or any consideration other than a share in the tomato crop on such land shall be considered as owned by the lessee. Land which would otherwise be one unit may be divided according to applicable guidelines on file in the office for the county or by written agreement between the Corporation and the insured. The Corporation shall determine units as herein defined when adjusting a loss, notwithstanding what is shown on the acreage report, and has the right to consider any acreage and share reported by or for the insured's spouse or child or any member of the insured's household to be the bona fide share of the insured or any other person having the bona fide share.

2. *Acreage Insured.* (a) The Corporation reserves the right to limit the insured acreage of tomatoes to any acreage limitations established under any Act of Congress, provided the insured is so notified in writing prior to the planting of tomatoes.

(b) If the insured does not submit an acreage report on or before the acreage reporting date on file in the office for the county, the Corporation may elect to determine by units the insured acreage and share or declare the insured acreage on any unit(s) to be "zero". If the insured does not have a share in any insured acreage in the county for any year, the insured shall submit a report so indicating. Any acreage report submitted by the insured may be revised only upon approval of the Corporation.

3. *Irrigated Acreage.* (a) Where the actuarial table provides for insurance on an irrigated practice, the insured shall report as irrigated only the acreage for which the insured has adequate facilities and water to carry out a good irrigation practice at the time of planting.

(b) Where irrigated acreage is insurable, any loss of production caused by failure to carry out a good irrigation practice, except failure of the water supply from an unavoidable cause occurring after the beginning of planting, as determined by the Corporation, shall be considered as due to an uninsured cause. The failure or breakdown of irrigation equipment or facilities shall not be considered as a failure of the water supply from an unavoidable cause.

4. *Annual Premium.* (a) If there is no break in the continuity of participation, any premium adjustment applicable under section 5 of the policy shall be transferred to (1) the contract of the insured's estate or surviving spouse in case of death of the insured, (2) the contract of the person who succeeds the insured if such person had previously participated in the farming operation, or (3) the contract of the same insured who

stops farming in one county and starts farming in another county.

(b) If there is a break in the continuity of participation, any reduction in premium earned under section 5 of the policy shall not thereafter apply; *however*, any previous unfavorable insurance experience shall be considered in premium computation following a break in continuity.

5. *Claim for and Payment of Indemnity.* (a) Any claim for indemnity on a unit shall be submitted to the Corporation on a form prescribed by the Corporation.

(b) In determining the total production to be counted for each unit, production from units on which the production has been commingled will be allocated to such units in proportion to the liability on each unit.

(c) There shall be no abandonment to the Corporation of any insured tomato acreage.

(d) In the event that any claim for indemnity under the provisions of the contract is denied by the Corporation, an action on such claim may be brought against the Corporation under the provisions of 7 U.S.C. 1508(c): *Provided*, That the same is brought within one year after the date notice of denial of the claim is mailed to and received by the insured.

(e) Any indemnity will be payable within 30 days after a claim for indemnity is approved by the Corporation. *However*, in no event shall the Corporation be liable for interest or damages in connection with any claim for indemnity whether such claim be approved or disapproved by the Corporation.

(f) If the insured is an individual who dies, disappears, or is judicially declared incompetent, or the insured is an entity other than an individual and such entity is dissolved after the tomatoes are planted for any crop year, any indemnity will be paid to the person(s) the Corporation determines to be beneficially entitled thereto.

(g) The Corporation reserves the right to reject any claim for indemnity if any of the requirements of this section or section 8 of the policy are not met and the Corporation determines that the amount of loss cannot be satisfactorily determined.

6. *Subrogation.* The insured (including any assignee or transferee) assigns to the Corporation all rights of recovery against any person for loss or damage to the extent that payment hereunder is made by the Corporation. The Corporation thereafter shall execute all papers required and take appropriate action as may be necessary to secure such rights.

7. *Termination of the Contract.* (a) The contract shall terminate if no premium is earned for five consecutive years.

(b) If the insured is an individual who dies or is judicially declared incompetent, or the insured entity is other than an individual and such entity is dissolved, the contract shall terminate as of the date of death, judicial declaration, or dissolution; *however*, if such event occurs after insurance attaches for any crop year, the contract shall continue in force through such crop year and terminate at the end thereof. Death of a partner in a partnership shall dissolve the partnership unless the partnership agreement provides otherwise. If two or more persons having a joint interest are insured jointly, death of one of the persons shall dissolve the joint entity.

8. *Coverage Level and Price Election.* (a) If the insured has not elected on the application a coverage level and price at which indemnities shall be computed from among those shown on the actuarial table, the coverage level and price election which shall be applicable under the contract, and which the insured shall be deemed to have elected, shall be as provided on the actuarial table for such purposes.

(b) The insured may, with the consent of the Corporation, change the coverage level and/or price election for any crop year on or before the closing date for submitting applications for that crop year.

9. *Assignment of Indemnity.* Upon approval of a form prescribed by the Corporation, the insured may assign to another party the right to an indemnity for the crop year and such assignee shall have the right to submit the loss notices and forms as required by the contract.

10. *Contract Changes.* The Corporation reserves the right to change any terms and provisions of the contract from year to year. Any changes shall be mailed to the insured or placed on file and made available for public inspection in the office for the county at least 15 days prior to the cancellation date preceding the crop year for which the changes are to become effective, and such mailing or filing shall constitute notice to the insured. Acceptance of any changes will be conclusively presumed in the absence of any notice from the insured to cancel the contract as provided in section 12 of the policy.

Note.—The reporting requirements contained herein have been approved by the Office of Management and Budget in accordance with the Federal Reports Act of 1942 and OMB Circular A-40.

Approved by the Board of Directors on May 30, 1980.

Peter F. Cole,

Secretary, Federal Crop Insurance Corporation.

Dated: June 23, 1980.

Approved by: W. Otto Johnson, *Acting Manager.*

[FR Doc. 80-19569 Filed 6-27-80; 8:45 am]

BILLING CODE 3410-08-M

DEPARTMENT OF AGRICULTURE

Agricultural Marketing Service

7 CFR Part 928

Handling of Papayas Grown in Hawaii; Proposed Amendment to Rules and Regulations

AGENCY: Agricultural Marketing Service, USDA.

ACTION: Proposed rule.

SUMMARY: This proposed action would permit a producer to handle 100 pounds of papayas he or she produces direct to consumers during any one day for home use and not for resale exempt from certain requirements of the order. Regulating the handling of papayas grown in Hawaii.

DATES: Comments must be received not later than July 15, 1980.

ADDRESS: Send two copies of comments to the Hearing Clerk, Room 1077 South Building, U.S. Department of Agriculture, Washington, D.C. 20250, where they will be made available for public inspection during regular business hours (7 CFR 1.27(b)).

FOR FURTHER INFORMATION CONTACT: Malvin E. McGaha, Chief, Fruit Branch, F&V, AMS, UDSA, Washington, D.C. 20250, telephone 202-447-5975. The Draft Impact Analysis relative to this proposed rule is available on request from the above named individual.

SUPPLEMENTARY INFORMATION: This proposed action has been reviewed under USDA procedures established in Secretary's Memorandum 1955 to implement Executive Order 12044 and classified "not significant." The proposal is being published with less than a 60-day comment period because there is insufficient time between the date when the information upon which it is based became available and the effective date necessary to effectuate the declared policy of the act. The proposed amendment to the rules and regulations was recommended by the Papaya Administrative Committee. The rules and regulations (Subpart—Rules and Regulations; 7 CFR 928.100-928.160) are effective pursuant to the applicable

provisions of the marketing agreement and Order No. 928 (7 CFR Part 928), regulating the handling of papayas grown in Hawaii. The agreement and order are effective under the Agricultural Marketing Agreement Act of 1937, as amended (7 U.S.C. 601–674).

Section 928.54 of the order provides that the committee, with the approval of the Secretary, may establish a rule regarding special purpose and minimim quantity exemption of papayas. Such section also provides that the committee shall, with the approval of the Secretary, prescribe such rules, regulations, and safeguards as it may deem necessary to assure compliance.

The proposal would require each producer to apply to the committee to handle papayas he or she producer direct to consumers exempt from the provisions of § 928.41 (assessments), § 928.52 (issuance of regulations), § 928.53 (modification, suspension, or termination of regulations), and § 928.55 (inspection and certification). Each approved applicant may sell not more than 100 pounds of papayas during any one day direct to consumers for home use and not for resale.

The proposal is to add a new section reading as follows:

§ 928.153 Minimum quantities exemption.

(a) Any producer may apply to the committee to handle papayas he or she producers direct to consumers exempt from the provisions of §§ 928.41, 928.52, 928.53, and 928.55. Such application shall show:

(1) The name and address of the producer;

(2) The location of the orchard, the acreage in such orchard, and the estimated production thereof;

(3) The location at which the producer will sell the papayas to consumers; and

(4) An agreement to submit such reports as may be required by the Committee.

(b) Upon approval of the producer's application, such producer may sell not to exceed a total of 100 pounds of papayas during any one day direct to consumers for home use and not for resale.

Dated: June 25, 1980.

D. S. Kuryloski,

Deputy Director, Fruit and Vegetable Division, Agricultural Marketing Service.

[FR Doc. 80-19604 Filed 6-27-80; 8:45 am]

BILLING CODE 3410-02-M

DEPARTMENT OF TRANSPORTATION

Federal Aviation Administration

14 CFR Part 39

[Docket No. 80-NW-28-AD]

Hiller UH-12D and UH-12E as Modified by Soloy Conversions, Ltd., STC Nos. SH177WE and SH178WE, Respectively; Airworthiness Directives

AGENCY: Federal Aviation Administration (FAA), DOT.

ACTION: Notice of Proposed Rulemaking.

SUMMARY: This notice proposes to adopt an Airworthiness Directive (AD) that would require replacement of the engine output shaft to prevent excessive torsional stresses which could lead to engine, transmission, or drive line failure resulting in loss of power to the rotar drive system. The proposed rule is prompted by investigations which show that certain combinations of engine and torquemeter gear induce steady-state torsional vibrations which exceed the engine manufacturer's approved installation limits.

DATE: Comments must be received on or before August 1, 1980.

ADDRESS: Send comments on the proposal in duplicate to:

Federal Aviation Administration, Northwest Region, Office of Regional Counsel, Attention: Airworthiness Rules Docket, Docket No. 80-NW-28-AD, 9010 East Marginal Way South, Seattle, Washington 98108.

FOR FURTHER INFORMATION CONTACT: Daniel I. Cheney, Propulsion Section, ANW-214, Engineering and Manufacturing Branch, FAA Northwest Region, 9010 East Marginal Way South, Seattle, Washington, 98108, (206) 767-2520.

SUPPLEMENTARY INFORMATION: During recent testing with an instrumented helicopter drive shaft, torsional vibrations were discovered which exceeded the engine manufacturer's approved installation limits for the engine. Subsequent investigations revealed the problem to be with certain undefined characteristics of the torquemeter gear found mainly on Detroit Diesel Allison (DDA) 250-C20B engines but which are also eligible for 250-C20 engines.

There have been no reported accidents or service difficulties to date that can be attributed to the vibration, but the potential exists for engine, transmission, or drive line failure. This proposed rule is necessary to insure the continued safe operation of Soloy converted Hiller UH-12D/E helicopters. The modification required by the proposal replaces the engine output coupling shaft with one which exhibits torsional stresses which are within acceptable limits.

Comments Invited

Interested persons are invited to participate in the making of the proposed rule by submitting such written data, views, or arguments as they may desire. Communications should identify the regulatory docket or notice number and be submitted in duplicate to the address specified above. All communications received on or before the closing date for comments specified above will be considered by the Administrator before taking action on the proposed rule. The proposals contained in this notice may be changed in the light of comments received. All comments submitted will be available both before and after the closing date for comments in the Rules Docket for examination by interested persons. A report summarizing each FAA/public contact concerned with the substance of this proposal will be filed in the Rules Docket.

Availability of NPRM's

Any person may obtain a copy of this Notice of Proposed Rulemaking (NPRM) by submitting a request to the Federal Aviation Administration, Northwest Region, Office of the Regional Counsel, Attention: Airworthiness Directive Rules Docket, Docket No. 80-NW-28-AD, 9010 East Marginal Way South, Seattle, Washington 98108.

The Proposed Amendment

Accordingly, the Federal Aviation Administration proposes to amend § 39.13 of the Federal Aviation Regulations (14 CFR 39.13) by adding the following new Airworthiness Directive:

Hiller Aviation: Applies to Hiller UH-12D and UH-12E (including 4-place) helicopters certificated in all categories which have been converted to turbine power under Soloy Conversions, Ltd. Supplemental Type Certificates SH177WE and SH178WE.

Compliance required within 500 hours operating time or 180 days, whichever occurs first after the effective date of this AD.

Replace Soloy Part Number 560-2408-2 engine output coupling shaft with Soloy Part Number 660-2408-3 shaft in accordance with Soloy Service Bulletin Number 12-560 dated May 21, 1980, or later FAA Approved revisions.

Equivalent methods of compliance may be used when approved by the Chief, Engineering and Manufacturing Branch, FAA Northwest Region, 9010 East Marginal Way South, Seattle, Washington 98108.

(Secs. 313(a), 601, 603, Federal Aviation Act of 1958, as amended (49 U.S.C. 1655(c)); and 14 CFR 11.85)

Note.—The FAA has determined that this document involves a proposed regulation which is not considered to be significant under the provisions of Executive Order 12044 and as implemented by Department of Transportation Regulatory Policies and Procedures (44 FR 11034; February 26, 1979).

Issued in Seattle, Wash., on June 18, 1980.

E. O'Connor,

Acting Director, Northwest Region.

[FR Doc. 80-19554 Filed 6-27-80; 8:45 am]

BILLING CODE 4910-13-M

14 CFR Part 39

[Docket No. 80-WE-29-AD]

McDonnell Douglas Model DC-9 Series Airplanes; Airworthiness Directives

AGENCY: Federal Aviation Administration (FAA) DOT.

ACTION: Notice of proposed rule making.

SUMMARY: This notice proposes to adopt an airworthiness directive (AD) that would require inspection, lubrication, and sealing of upper cargo door attach hardware on McDonnell Douglas Model DC-9 series airplanes so equipped. The proposed AD is needed to prevent stress corrosion cracking of the upper cargo door spool fitting attach bolts which could jeopardize the door latching/locking capability.

DATE: Comments must be received on or before September 4, 1980.

ADDRESSES: Send comments on the proposal to: Department of Transportation, Federal Aviation Administration, Western Region, Attention: Regional Counsel, Airworthiness Rule Docket, P.O. Box 92007, Worldway Postal Center, Los Angeles, California 90009.

The applicable service information may be obtained from: McDonnell Douglas Corporation, 3855 Lakewood Boulevard, Long Beach, California 90846, Attention: Director, Publications and Training, C1-750, (54-60).

FOR FURTHER INFORMATION CONTACT: Jerry Presba, Executive Secretary, Airworthiness Directive Review Board, Federal Aviation Administration, Western Region, P.O. Box 92007, World Way Postal Center, Los Angeles, California 90009. Telephone: (213) 536-6351.

SUPPLEMENTARY INFORMATION: Interested persons are invited to participate in the making of the proposed rule by submitting such written data, views, or arguments as they may desire. Interested persons are also invited to comment on the economic, environmental and energy impact that might result because of adoption of the proposed rule. Communications should identify the regulatory docket number and be submitted in duplicate to the address specified above. All communications received on or before the closing date for comments will be considered by the Administrator before taking action on the proposed rule. The proposal contained in this notice may be changed in light of comments received. All comments submitted will be available, both before and after the closing date for comments, in the Rules Docket for examination by interested persons. A report summarizing each FAA-public contact, concerned with the substance of the proposed AD, will be filed in the Rules Docket.

There have been reports of upper cargo door latch spool base fitting attach bolt failures on McDonnell Douglas Model DC-9 series airplanes which could jeopardize the door latching/locking capability. The cause has been attributed to stress corrosion produced by entrapped moisture in the void area between the bolts and spool attach fittings. Since this condition is likely to exist or develop in other airplanes of the same type design, the proposed AD would require inspection, lubrication and sealing, and bolt replacement if required, on upper main cargo door latch spool fitting attach bolts on McDonnell Douglas Model DC-9 series airplanes so equipped.

Proposed Amendment

Accordingly, the Federal Aviation Administration proposes to amend § 39.13 of the Federal Aviation Regulations (14 CFR 39.13) by adding the following new Airworthiness Directive:

McDonnell Douglas: Model DC-9 series airplanes equipped with upper main cargo door certificated in all categories.

Compliance required as indicated, unless already accomplished.

To prevent possible failure of the upper main cargo door latching/locking capability, accomplish the following:

(a) For fuselage numbers 1 through 675, within 12 months from the effective date of this AD remove, two at a time, the latch spool base fitting attach bolts and nuts, and perform the following:

(1) Visually inspect nuts and bolts for evidence of corrosion and damage, and

(2) Visually inspect the bolts for loss of plating, and

(3) Inspect the nuts and bolts for cracks utilizing magnetic particle inspection methods.

(b) For fuselage numbers 676 and subsequent, within 24 months from the effective date of this AD, conduct the inspections required by paragraph (a) of this AD.

(c) Any bolts or nuts which show any of the discrepancies defined in paragraph (a) of this AD are to be replaced with like servicable parts.

(d) Bolt reinstallation shall be as follows:

(1) Swab bolt hole cavities with denatured alcohol and dry thoroughly with dry compressed air;

(2) Lubricate bolt holes, shanks, and threads with Parker-O-Lube;

(3) Install lubricated bolts in cleaned and lubricated holes;

(4) Using a grease gun with a midget flush nozzle, carefully fill the void around each bolt with Parker-O-Lube. Do not overfill;

(5) Install nuts and washers;

(6) Torque to 550-600 inch-pounds;

(7) Thoroughly clean the exposed portion of the bolts, nuts, washers, and around the fitting using 1, 1, 1 trichloroethane (Mil-T-81533). Do not remove Parker-O-Lube from the void around the bolt;

(8) Fillet seal around the fitting base, plate, shims, and over the upper end of the bolts (head or nut) using PR 1422B 1/2 (Mil-S-8802) sealant.

Note.—McDonnell Douglas All Operators Letter AOL9-833A dated April 2, 1979 and McDonnell Douglas DC-9 Alert Service Bulletin A52-115, dated October 15, 1979, refer to this subject.

(e) Special flight permits may be issued in accordance with FAR 21.197 and 21.199 to operate airplanes to a base for the accomplishment of inspections required by this AD.

(f) Alternative inspections, modifications or other actions which provide an equivalent level of safety may be used when approved by the Chief, Aircraft Engineering Division, FAA Western Region.

(Secs. 313(a), 601, 603, Federal Aviation Act of 1958, as amended (49 U.S.C. 1354(a), 1421, 1423); sec. 6(c) Department of Transportation Act (49 U.S.C. 1655(c)); and 14 CFR 11.85)

Note.—The Federal Aviation Administration has determined that this document involves a proposed regulation which is not considered to be significant under Executive Order 12044 as implemented by DOT Regulatory Policies and Procedures (44 FR 11034; February 26, 1979). In addition, the expected impact is so minimal that this action does not warrant preparation of a regulatory evaluation.

Issued in Los Angeles, Calif., on June 19, 1980.

W. R. Frahse,

Acting Director, FAA Western Region.

[FR Doc. 80-19549 Filed 6-27-80; 8:45 am]

BILLING CODE 4910-13-M

14 CFR Part 39

[Docket No. 80-WE-30-AD]

McDonnell Douglas Model DC-10 Series Airplanes; Airworthiness Directives

AGENCY: Federal Aviation Administration (FAA) DOT.

ACTION: Notice of proposed rule making.

SUMMARY: This notice proposes to adopt an airworthiness directive (AD) that would require inspection, lubrication, and sealing of cargo door attach hardware of all cargo doors on McDonnell Douglas Model DC-10 series airplanes. The proposed AD is needed to prevent stress corrosion cracking of the cargo door spool fitting attach bolts which could jeopardize the door latching/locking capability.

DATE: Comments must be received on or before September 4, 1980.

ADDRESSES: Send comments on the proposal to: Department of Transportation, Federal Aviation Administration, Western Region, Attention: Regional Counsel, Airworthiness Rule Docket, P.O. Box 92007, Worldway Postal Center, Los Angeles, California 90009.

The applicable service information may be obtained from: McDonnell Douglas Corporation, 3855 Lakewood Boulevard, Long Beach, California 90846, Attention: Director, Publications and Training, C1-750, (54-60).

FOR FURTHER INFORMATION CONTACT: Jerry Presba, Executive Secretary, Airworthiness Directive Review Board, Federal Aviation Administration, Western Region, P.O. Box 92007, World Way Postal Center, Los Angeles, California 90009. Telephone (213) 536-6351.

SUPPLEMENTARY INFORMATION: Interested persons are invited to participate in the making of the proposed rule by submitting such written data, views, or arguments as they may desire. Interested persons are also invited to comment on the economic, environmental and energy impact that might result because of adoption of the proposed rule. Communications should identify the regulatory docket number and be submitted in duplicate to the address specified above. All communications received on or before the closing date for comments will be considered by the Administrator before taking action on the proposed rule. The proposal contained in this notice may be changed in light of comments received. All comments submitted will be available, both before and after the closing date for comments, in the Rules Docket for examination by interested persons. A report summarizing each FAA-public contact, concerned with the substance of the proposed AD, will be filed in the Rules Docket.

There have been reports of cargo door latch spool base fitting attach bolt failures on McDonnell Douglas Model DC-10 series airplanes which could jeopardize the door latching/locking capability. The cause has been attributed to stress corrosion produced by entrapped moisture in the void area between the bolts and spool attach fittings. Since this condition is likely to exist or develop in other airplanes of the same type design, the proposed AD would require inspection, lubrication and sealing, and bolt replacement if required, on cargo door latch spool fitting attach bolts on McDonnell Douglas Model DC-10 seriers airplanes.

Proposed Amendment

Accordingly, the Federal Aviation Administration proposes to amend § 39.13 of the Federal Aviation Regulations (14 CFR 39.13) by adding the following new Airworthiness Directive:

McDonnell Douglas: Model DC-10 series airplanes certificated in all categories.

Compliance required as indicated, unless already accomplished.

To prevent possible failure of the cargo door latching/locking capability, accomplish the following:

(a) For fuselage numbers 1 through 125, within 12 months from the effective date of this AD remove, two at a time, the latch spool base fitting attach bolts and nuts, and perform the following:

(1) Visually inspect nuts and bolts for evidence of corrosion and damage, and

(2) Visually inspect the bolts for loss of plating, and

(3) Inspect the nuts and bolts for cracks utilizing magnetic particle inspection methods.

(b) For fuselage numbers 126 and subsequent, within 24 months from the effective date of this AD, conduct the inspections required by paragraph (a) of this AD.

(c) Any bolts or nuts which show any of the discrepancies defined in paragraph (a) of this AD are to be replaced with like servicable parts.

(d) Bolt reinstallation shall be as follows:

(1) Swab bolt hole cavities with denatured alcohol and dry thoroughly with dry compressed air;

(2) Lubricate bolt holes, shanks, and threads with Parker-O-Lube;

(3) Install lubricated bolts in cleaned and lubricated holes;

(4) Using a grease gun with a midget flush nozzle, carefully fill the void around each bolt with Parker-O-Lube. Do not overfill;

(5) Install nuts and washers;

(6) Torque to 550-600 inch-pounds;

(7) Thoroughly clean the exposed portion of the bolts, nuts, washers, and around the fitting using 1, 1, 1 trichloroethane (MIL-T-81533). Do not remove Parker-O-Lube from the void around the bolt;

(8) Fillet seal around the fitting base, plate, shims, and over the upper end of the bolts (head or nut) using PR 1422B ½ (Mil-S-8802) sealant.

Note.—McDonnell Douglas All Operators Letter 10-719A dated 2/14/79 and McDonnell Douglas DC-10 Alert Service Bulletin A52-181, dated October 15, 1979, refer to this subject.

(e) Special flight permits may be issued in accordance with FAR 21.197 and 21.199 to operate airplanes to a base for the accomplishment of inspections required by this AD.

(f) Alternative inspections, modifications or other actions which provide an equivalent level of safety may be used when approved by the Chief, Aircraft Engineering Division, FAA Western Region.

(Secs. 313(a), 601, 603, Federal Aviation Act of 1958, as amended (49 U.S.C. 1354(a), 1421, 1423); sec. 6(c) Department of Transportation Act (49 U.S.C. 1655(c)); 14 CFR 11.85)

Note.—The Federal Aviation Administration has determined that this document involves a proposed regulation which is not considered to be significant under Executive Order 12044 as implemented by DOT Regulatory Policies and Procedures (44 FR 11034; February 26, 1979). In addition, the expected impact is so minimal that this action does not warrant preparation of a regulatory evaluation.

Issued in Los Angeles, Calif., on June 19, 1980.

W. R. Frehse,

Acting Director, FAA Western Region.

[FR Doc. 80-19550 Filed 6-27-80; 8:45 am]

BILLING CODE 4910-13-M

---

14 CFR Part 39

[Docket No. 80-WE-28-AD]

McDonnell Douglas Model DC-8 Series Airplanes; Airworthiness Directives

AGENCY: Federal Aviation Administration (FAA) DOT.

ACTION: Notice of proposed rule making.

SUMMARY: This notice proposes to adopt an airworthiness directive (AD) that would require inspection, lubrication, and sealing of upper cargo door attach hardware on McDonnell Douglas Model DC-8 series airplanes so equipped. The proposed AD is needed to prevent stress corrosion cracking of the upper cargo door spool fitting attach bolts which could jeopardize the door latching/locking capability.

DATE: Comments must be received on or before September 4, 1980.

ADDRESSES: Send comments on the proposal to:

Department of Transportation, Federal Aviation Administration, Western Region, Attention: Regional Counsel, Airworthiness Rule Docket, P.O. Box 92007, Worldway Postal Center, Los Angeles, California 90009.

The applicable service information may be obtained from:

McDonnell Douglas Corporation, 3855 Lakewood Boulevard, Long Beach, California 90846, Attention: Director,

Publications and Training, C1-750, (54-60).

FOR FURTHER INFORMATION CONTACT: Jerry Presba, Executive Secretary Airworthiness Directive Review Board, Federal Aviation Administration, Western Region, P.O. Box 92007, Worldway Postal Center, Los Angeles, California 90009. Telephone: (213) 536-6351.

SUPPLEMENTARY INFORMATION: Interested persons are invited to participate in the making of the proposed rule by submitting such written data, views, or arguments as they may desire. Interested persons are also invited to comment on the economic, environmental and energy impact that might result because of adoption of the proposed rule. Communications should identify the regulatory docket number and be submitted in duplicate to the address apecified above. All communications received on or before the closing date for comments will be considered by the Administrator before taking action on the proposed rule. The proposal contained in this notice may be changed in light of comments received. All comments submitted will be available, both before and after the closing date for comments, in the Rules Docket for examination by interested persons. A report summarizing each FAA-public contact, concerned with the substance of the proposed AD, will be filed in the Rules Docket.

There have been reports of upper cargo door latch spool base fitting attach bolt failures on McDonnell Douglas Model DC-8 series airplanes which could jeopardize the door latching/locking capability. The cause has been attributed to stress corrosion produced by entrapped moisture in the void area between the bolts and spool attach fittings. Since this condition is likely to exist or develop in other airplanes of the same type design, the proposed AD would require inspection, lubrication and sealing, and bolt replacement if required, on upper main cargo door latch spool fitting attach bolts on McDonnell Douglas Model DC-8 series airplanes so equipped.

Proposed Amendment

Accordingly, the Federal Aviation Administration proposes to amend § 39.13 of the Federal Aviation Regulations (14 CFR 39.13) by adding the following new Airworthiness Directive:

McDonnell Douglas: Model DC-8 series airplanes equipped with upper main cargo door certificated in all categories. Compliance required as indicated, unless already accomplished.

To prevent possible failure of the upper main cargo door latching/locking capability, accomplish the following:

(a) Within 12 months from the effective date of this AD remove, two at a time, the latch spool base fitting attach bolts and nuts, and perform the following

(1) Visually inspect nuts and bolts for evidence of corrosion and damage, and

(2) Visually inspect the bolts for loss of plating, and

(3) Inspect the nuts and bolts for cracks utilizing magnetic particle inspection methods.

(b) Any bolts or nuts which exhibit any of the discrepancies defined in paragraph (a) of this AD are to be replaced with like servicable parts.

(c) Bolt reinstallation shall be as follows:

(1) Swab bolt hole cavities with denatured alcohol and dry thoroughly with dry compressed air;

(2) Lubricate bolt holes, shanks, and threads with Parker-O-Lube.

(3) Install lubricated bolts in cleaned and lubricated holes;

(4) Using a grease gun with a midget flush nozzle, carefully fill the void around each bolt with Parker-O-Lube. Do not overfill.

(5) Install nuts and washers.

(6) Torque to 550-600 inch-pounds;

(7) Thoroughly clean the exposed portion of the bolts, nuts, washers, and around the fitting using 1, 1, 1 trichloroethane (MIL-T-81533). Do not remove Parker-O-Lube from the void around the bolt;

(8) Fillet seal around the fitting base, plate shims, and over the upper end of the bolts (head or nut) using PR 1422B ½ (Mil-S-6302) sealant.

Note.—McDonnell Douglas DC-8 Service Bulletin 52-78 dated May 5, 1975 and McDonnell Douglas DC-8 Alert Service Bulletin A52-81, dated October 15, 1979, refer to this subject.

(d) Special flight permits may be issued in accordance with FAR 21.197 and 21.199 to operate airplanes to a base for the accomplishment of inspections required by this AD.

(e) Alternative inspections, modifications or other actions which provide an equivalent level of safety may be used when approved by the Chief, Aircraft Engineering Division, FAA Western Region.

(Secs. 313(a), 601, 603, Federal Aviation Act of 1958, as amended (49 U.S.C. 1354(a), 1421, 1423); sec. 6(c) Department of Transportation Act (49 U.S.C. 1655(c)); 14 CFR 11.85)

Note.—The Federal Aviation Administration has determined that this document involves a proposed regulation which is not considered to be significant under Executive Order 12044 as implemented by DOT Regulatory Policies and Procedures (44 FR 11034; February 26, 1979). In addition, the expected impact is so minimal that this action does not warrant preparation of a regulatory evaluation.

Issued in Los Angeles, Calif., on June 19, 1980.

W. R. Frehse,

Acting Director, FAA Western Region.

[FR Doc. 80-19551 Filed 6-27-80; 8:45 am]

BILLING CODE 4910-13-M

DEPARTMENT OF HOUSING AND URBAN DEVELOPMENT

Office of the Secretary

24 CFR Part 869

[R-80-829]

Low-Income Public Housing; Transmittal of Interim Rule to Congress

AGENCY: Department of Housing and Urban Development.

ACTION: Notice of transmittal of interim rule to Congress under Section 7(o) of the Department of HUD Act.

SUMMARY: Recently enacted legislation authorizes Congress to review certain HUD rules for fifteen (15) calendar days of continuous session of Congress prior to each such rule's publication in the Federal Register. This Notice lists and summarizes for public information an interim rule which the Secretary is forwarding to Congress for such review. This interim rule would implement Section 211 of the Housing and Community Development Amendments of 1979 to amend Section 9 of the U.S. Housing Act of 1937 and, thus, provide for the continued operation of a public housing project as low-income housing after the completion of debt service for the project. Under this rule, the maintenance of the low-income nature of a project would allow for continued eligibility for payment of operating subsidy with respect to the project.

FOR FURTHER INFORMATION CONTACT: Burton Bloomberg, Director, Office of Regulations, Office of General Counsel, 451 7th Street, S.W., Washington, D.C. 20410, (202) 755-6207.

SUPPLEMENTARY INFORMATION: Concurrently with issuance of this Notice, the Secretary is forwarding to the Chairmen and Ranking Minority Members of both the Senate Banking, Housing and Urban Affairs Committee and the House Banking, Finance and Urban Affairs Committee the following rulemaking document:

24 CFR Part 869—Low-Income Public Housing—PHA-Owned Projects—Continued Operation as Low-Income Housing After Completion of Debt Service.

(Section 7(o) of the Department of HUD Act, 42 U.S.C. 3535(o), Section 324 of the Housing and Community Development Amendments of 1978)

Issued at Washington, D.C., June 25, 1980.

Moon Landrieu,

Secretary, Department of Housing and Urban Development.

[FR Doc. 80-19518 Filed 6-27-80; 8:45 am]

BILLING CODE 4210-01-M

EQUAL EMPLOYMENT OPPORTUNITY COMMISSION

29 CFR Part 1613

Equal Employment Opportunity in the Federal Government; Complaints of Handicap Discrimination

AGENCY: Equal Employment Opportunity Commission.

ACTION: Proposed regulations.

SUMMARY: The Equal Employment Opportunity Commission proposes to amend its regulations concerning complaints of handicap discrimination in order to authorize awards of back pay to applicants for Federal employment. The proposed regulations also make clear that a complainant has the right to file suit in Federal court if dissatisfied with final agency action, or failure to act, on a complaint of handicap discrimination. These changes are necessary in order to conform to the 1978 amendments to the Rehabilitation Act of 1973.

COMMENT DATE: Written comments will be considered if received on or before August 29, 1980.

ADDRESS: Comments should be addressed to Marie Wilson, Executive Secretariat, Equal Employment Opportunity Commission, 2401 E Street, N.W., Washington, D.C. 20506.

FOR FURTHER INFORMATION CONTACT: Thomas L. Saltonstall, Director, Technical Guidance Division, Equal Employment Opportunity Commission, 2401 E Street, N.W., Washington, D.C. 20506, telephone (202) 634-6855.

SUPPLEMENTARY INFORMATION: As part of Reorganization Plan #1 of 1978, the responsibility for enforcing equal employment opportunity in the Federal Government for handicapped individuals was transferred from the Civil Service Commission to the Equal Employment Opportunity Commission (EEOC). To provide continuity during the transfer of functions, EEOC adopted the procedures for complaints of handicap discrimination which had previously been issued by the Civil Service Commission. *See* 43 FR 60900 (December 29, 1978). These procedures originally appeared at 43 FR 12293 (March 24, 1978) and are now codified at 29 CFR 1613.701 through 1613.710. Changes in these procedures are now necessary in order to comply with the 1978 amendments to the Rehabilitation Act of 1973.

The 1978 amendments added a new section (§ 505) to the Rehabilitation Act of 1973. *See* Pub. L. 95-602, § 120, 92 Stat. 2982 (November 6, 1978). Section 505 makes available to individuals complaining of handicap discrimination the same remedies, procedures and rights as are provided under Section 717 of Title VII of the Civil Rights Act of 1964. The legislative history of this amendment demonstrates that Congress intended it to apply at the administrative as well as the judicial level. *See* 124 Cong. Rec. S15591 (daily ed. Sept. 20, 1978) (remarks of Senator Cranston); Senate Report #95-890, 95th Cong., 2d Sess., 18-19 (1978).

In order to implement this statutory amendment, it is necessary to delete Section 1613.710 of the Commission's regulations. This section currently prohibits awards of back pay to applicants for employment aggrieved by handicap discrimination. At the time the Civil Service Commission adopted this regulation, the only statutory authority for awards of back pay in handicap discrimination cases was the Back Pay Act, 5 U.S.C. § 5596. *See* 43 FR 12293, 12294 (March 24, 1978). Since the Back Pay Act applies to employees only, the Civil Service Commission prohibited awards of back pay to applicants for employment. This restriction is no longer either necessary or permissible. Section 505 of the Rehabilitation Act now extends to complainants in handicap discrimination cases the same right to administrative awards of back pay as is provided by Section 717(b) of the Civil Rights Act of 1964. As a result, back pay is now available to both applicants for Federal employment and Federal employees.

Section 505 of the Rehabilitation Act also entitles persons complaining of handicap discrimination to file suit in Federal court once they have met the prerequisites set forth in section 717(c) of the Civil Rights Act of 1964. This new right is reflected in the amendment to Section 1613.708 of the Commission's regulations. As amended, this section makes the Commission's regulations concerning the right to file a civil action (§§ 613.281-1613.283) applicable to complaints of handicap discrimination.

The Commission has determined that these regulations do not require a regulatory analysis under Section 3 of Executive Order 12044.

By virtue of the authority vested in the Commission under Sections 501 and 505 of the Rehabilitation Act of 1973, as amended, 29 U.S.C. §§ 791 and 794a, Reorganization Plan No. 1 of 1978 (43 FR 19807), and Executive Order 12106 (44 FR 1053), the Equal Employment Opportunity Commission hereby publishes the following amendments to its regulations on Equal Employment Opportunity in the Federal Government.

Signed this 26th day of June 1980.

For the Commission.

Eleanor Holmes Norton,

Chair.

PART 1613—EQUAL EMPLOYMENT OPPORTUNITY IN THE FEDERAL GOVERNMENT

Accordingly, 29 CFR Part 1613 is amended by revising Sections 708 and 710, as explained below:

1. 29 CFR 1613.708 is revised to read as follows:

§ 1613.708 General.

An agency shall provide regulations governing the acceptance and processing of complaints of discrimination based on a physical or mental handicap which comply with the principles and requirements in §§ 1613.213 through 1613.283 and §§ 1613.601 through 1613.643. Nothing in the foregoing shall be construed to postpone the effective date of this rule.

2. 29 CFR 1613.710 is deleted.

§ 1613.710 [Deleted]

[FR Doc. 80-19503 Filed 6-27-80; 8:45 am]

BILLING CODE 6570-06-M

ENVIRONMENTAL PROTECTION AGENCY

40 CFR Part 52

[FRL 1528-4]

Approval and Promulgation of State Implementation Plans; Proposed Revision to the New York State Implementation Plan

AGENCY: Environmental Protection Agency.

ACTION: Proposed rulemaking.

SUMMARY: The purpose of this notice is to propose disapproval of certain portions of a revision to the New York State Implementation Plan (SIP) for the New York City metropolitan area (New York City and Nassau, Suffolk, Westchester and Rockland Counties). It deals only with those portions of the SIP revision related to public transit improvements. The other portions of the SIP revision, not related to public transit improvements, have been dealt with in earlier Federal Register notices prepared by the Environmental Protection Agency.

Those portions of the SIP revision discussed in today's notice of proposed rulemaking were prepared by the State to satisfy the requirements of sections 110(a)(3)(D), 110(c)(5) and 172 of the Clean Air Act relating to the attainment and maintenance of national ambient air quality standards and the establishment, expansion and improvement of public transportation measures to meet basic transportation needs.

DATE: Comments must be received on or before August 29, 1980.

ADDRESSES: Written comments should be submitted to:

Charles S. Warren, Regional Administrator, U.S. Environmental Protection Agency, Region II Office, 26 Federal Plaza, New York, New York 10278.

Copies of the proposal are available for public inspection during normal business hours at:

U.S. Environmental Protection Agency, Air Programs Branch, Room 908, Region II Office, 26 Federal Plaza, New York, New York 10278.

U.S. Environmental Protection Agency, Central Docket Section, Waterside Mall, Room 2903 B, 401 M Street, S.W., Washington, D.C. 20460.

New York State Department of Environmental Conservation, Division of Air, 50 Wolf Road, Albany, New York 12233.

New York State Department of Environmental Conservation, Region I, SUNY, Building 40, Stony Brook, New York 11790.

New York State Department of Environmental Conservation, Region II, 2 World Trade Center, 61st Floor, New York, New York 10047.

New York State Department of Environmental Conservation, Region III, 211 South Putt Corners Road, New Paltz, New York 12561.

New York State Department of Environmental Conservation, Region III, 202 Mamaroneck Avenue, White Plains, New York 10601.

New York State Department of Transportation, 1220 Washington Avenue, Building 5, Room 115, State Campus, Albany, New York 12232.

FOR FURTHER INFORMATION CONTACT: William S. Baker, Chief, Air Programs Branch, U.S. Environmental Protection Agency, Region II Ofdfice, 26 Federal Plaza, New York, New York 10278 (212) 264-2517.

SUPPLEMENTARY INFORMATION:

I. Introduction

The 1977 Amendments to the Clean Air Act reaffirmed the importance of public transportation in national efforts to protect and enhance air quality and in efforts to meet other national objectives. In recognition of this concern Congress, in a number of provisions of the Clean Air Act, required states with severe motor vehicle related air pollution problems to study and enact measures to establish, expand, or improve their public transportation systems to meet basic transportation needs.

In such areas the public transportation system must provide more than simply a means of traveling from one location to another. This is because, in order for some of the measures designed to reduce motor vehicle air pollution to work, the public transportation system must be viewed as a viable alternative to the private automobile. To be viewed in such a way the system must be convenient, extensive, reliable and capable of providing certain basic physical amenities. In other words, it must meet basic transportation needs.

The public transportation system of the New York City metrpolitan area is the largest (both in comprehensiveness and ridership) in the United States. It plays a major role in the area's economic and social vitality. There is probably nowhere else in the nation where a change in public transportation ridership can have as great an impact on motor vehicle related air pollution. Even a small percentage shift in ridership from public transportation to automobiles can have substantial impact.

The remainder of this notice deals with New York State's plans to improve public transportation in order to attract and maintain transit ridership and with the Environmental Protection Agency's (EPA's) review of these plans. Todays' notice is organized as follows:

Table of Contents

I. Introduction.
II. Background.
A. The 1970 Amendments to the Clean Air Act.
B. The 1977 Amendments to the Clean Air Act.
1. Section 110(c)(5) Requirements
2. Sections 172 and 110(a)(3)(D) Requirements.
a. Section 172(b)(1)-(10)
b. Section 172(b)(11)(A)-(C) and 110(a)(3)(D).
3. Effect on the New York City Metropolitan Area.
C. New York State Submittals and EPA Actions to Date.
1. BTN Plan.
2. Attainment Plan.
III. Description of the New York Submittals.
A. Introduction.
B. Summary of the BTN Plan's Content.
1. Introduction.
2. Relationship of Public Transportation to Air Quality.
3. Basic Transportation Needs.
4. Attainment Plan Transit Improvement Measures.
5. Funding for Public Transportation Measures.
6. Equivalent Emissions Reductions.
7. Responses to Comments Received at the March 16, 1979 Public Hearing.
C. Summary of the Attainment Plan's Content.
1. Management of the Transit System.
2. Fare Stabilization.
3. Public Transit Rehabilitation.
4. Improvements to and Methods of Promoting Mass Transit Service.
IV. EPA Review and Proposed Action.
A. Introduction.
B. BTN Plan Requirements and EPA Review.
1. The SIP may be revised to eliminate the requirements for bridge tolls upon application of the Governor.
2. The SIP must be revised to include measures to meet basic transportation needs.
a. Method of Analysis.
b. State's Identification of Basic Transportation Needs.
(1) Indicators.
(2) Performance Standards.
c. Adequacy of Public Transportation Improvement Measures Identified by the State as Being Necessary.
(1) Introduction.
(2) Fare Stability.
(3) Operational Safety and Reliability.
(4) Comfort.
(5) Environment and Security.
(6) Availability and Convenience of Service.
(7) Conclusion.
3. The SIP must include measures necessary to attain and maintain ambient air quality standards.
4. The SIP must include requirements to use federal grants and state or local funds.
a. Introduction.
b. Operating Program.
c. Capital Program.
5. The SIP must provide for emission reductions equivalent to the reductions which were expected from the bridge toll strategy.
6. The SIP must include written evidence requirements of Part D of the Clean Air Act.
a. State adoption after adequate notice and public hearing.
b. An accurate, current emissions inventory.
c. Adequate resources to carry out the SIP's provisions.
d. Schedules of compliance.
e. Evidence of public, local government and state legislative involvement and consultation.
f. Identification of air quality, health, welfare, economic and social effects of the SIP's provisions.
g. Adoption in legally enforceable form.
h. Commitments to implement and enforce the SIP.
C. Attainment Plan Requirements and EPA Review.
1. The SIP must be adopted only after adequate notice and public hearing.

2. The SIP must provide for the implementation of all reasonably available control measures.
3. The SIP must provide for reasonable further progress in emission reductions.
4. The SIP must include an accurate, current emissions inventory.
5. The SIP must include procedures for regulating the growth of new major sources of air pollution through a permit program.
6. The SIP must provide for adequate resources to carry out its provisions.
7. The SIP must contain compliance schedules.
8. The SIP must provide evidence of public, local government and state legislative involvement and consultation and identify the air quality, health, welfare, economic and social effects of its provisions.
9. The SIP must be adopted in legally enforceable form and contain commitments to implementation and enforcement.
10. Additional requirements for ozone or carbon monoxide SIPs with attainment dates after 1982.
a. Alternate site analyses for new source reviews.
b. A schedule for establishing a vehicle emission inspection and maintenance program.
c. A program for selecting transportation control measures as necessary to meet emission reduction targets.
d. A plan to meet basic transportation needs.
D. Summary of EPA's Proposed Action.
1. BTN Plan.
2. Attainment Plan.
V. Consequences of EPA's Proposed Action.
A. Findings Regarding Part D.
B. New Source Growth.
C. Funding Limitations.
D. Mitigating Measures Which the State May Undertake.
VI. Public Comment.
Addendum A—June 20, 1978 letter from Administrator Costle to Governor Carey.
Addendum B—Projects and Studies Contained in the New York State Basic Transportation Needs Plan.
Addendum C—Projects and Studies Contained in the New York State Attainment Plan.
Addendum D—Performance Standards Contained in the New York State Basic Transportation Needs Plan.
Addendum E—New York State Assessment of the Existing Public Transportation System's Ability to Meet Performance Standards.

II. Background

A. The 1970 Amendments to the Clean Air Act

Section 110(a)(2)(A) of the 1970 Amendments to the Clean Air Act required each state to develop a State Implementation Plan (SIP) providing for the attainment and maintenance of air quality standards. In addition to emission controls on stationary sources and the federal new car emission control program, the Clean Air Act specifically required that states implement transportation control measures where necessary to meet ambient air quality standards (Section 110(a)(2)(B)). In order to meet this requirement, on April 17, 1973 the Governor of New York State submitted a SIP revision which included transportation control measures for the New York City metropolitan area. This revision, as approved by EPA on June 22, 1973 (38 FR 16560), included Strategy B-7, "Imposition of Tolls on All East River Bridges and Harlem River Bridges." The goal of this strategy was to use the surplus of funds generated from its implementation to support public transportation. Strategy B-7 also would have reduced air pollution by creating a uniform toll structure for all bridges to the borough of Manhattan in New York City, thereby reducing unnecessary travel by vehicles attempting to avoid existing tolled facilities.

The 1973 SIP revision contained a schedule calling for imposition of the tolls by January 1977; however, no progress was made toward implementation. Consequently, on September 27, 1975, under the authority of Section 113(a) of the Clean Air Act, the EPA Region II Administrator issued an Administrative Order requiring the implementation of this strategy. Later, as a result of a suit brought by environmental groups, a federal court order also was obtained requiring the State and City of New York to implement Strategy B-7 by August 1978. (See generally, *Friends of the Earth III Friends of the Earth* v. *Carey*, 552 F.2d (2nd Cir., 1977)). This federal court order was subsequently modified to delete the requirement to implement Strategy B-7 and to substitute a requirement to comply with section 110(c)(5) of the Clean Air Act (this provision of the Clean Air Act is discussed in the next subsection of this notice).

B. The 1977 Amendments to the Clean Air Act

1. Section 110(c)(5) Requirements. In August 1977 the Clean Air Act was again amended. These 1977 Amendments contained a new section, section 110(c)(5), specifically relating to intracity bridge tolls. It provides that such toll requirements contained in a SIP would be eliminated upon application of the Governor. However, as part of this application, the Governor had to certify that he would revise the SIP by August 8, 1978 to meet the following provisions delineated in section 110(c)(5)(B) of the Clean Air Act:

- The inclusion of comprehensive measures to establish, expand or improve public transportation to meet basic transportation needs,
- The implementation of transportation control measures necessary to attain and maintain national ambient air quality standards,
- The use of any federal grants, state or local funds, or any combination thereof (consistent with terms of the legislation for use of those funds) as may be necessary to implement these measures,
- The inclusion of measures to provide for emission reductions equivalent to those expected to have been achieved by the bridge tolls, and
- The inclusion of the written evidence required by Part D of the Clean Air Act that the SIP revision:

—Was adopted after reasonable notice and public hearing (section 172(b)(1)),
—Includes a comprehensive, accurate and current emissions inventory (section 172(b)(4)),
—Identifies and commits the financial resources necessary to carry out the plan (section 172(b)(7)),
—Contains compliance schedules for its implementation (section 172(b)(8)),
—Contains evidence of public, local government, and state legislative involvement and consultation (section 172(b)(9)),
—Includes an identification and analysis of the air quality, health, welfare, economic, energy, and social effects of the plan and a summary of the public comment on such analysis (section 172(b)(9)(A)) and (B)),
—Includes written evidence that the State, local governments, or designated regional agency has adopted measures necessary to legally enforce the provisions of the plan and that the State, local government or regional agency is committed to implement and enforce the plan (section 172(b)(10)).

2. Sections 172 and 110(a)(3)(D) Requirements. The 1977 Amendments to the Clean Air Act also contained two other new sections of concern to today's notice, sections 172 and 110(a)(3)(D). Section 172 requires that for each area within a state not meeting a national ambient air quality standard, a revision to the SIP must be adopted by the state and submitted for approval to EPA. This revision is to provide for attainment of the contravened standard by December 31, 1982 or, for ozone and carbon monoxide, under certain conditions specified by the Clean Air Act, no later than December 31, 1987.

a. Section 172(b) (1)-(10): The SIP revision prepared by a state must meet

certain requirements delineated in section 172 of the Clean Air Act. Seven of these requirements were just identified in Subsection II.B.1. of this notice. The remaining provisions of section 172 require that a SIP revision must:

—Provide for the implementation of all reasonably available control measures as expeditiously as practicable (section 172(b)(2)),
—Require reasonable further progress toward attainment of the air quality standards (section 172(b)(3)),
—Identify the emissions to be allowed from major new or modified stationary sources (section 172(b)(5)),
—Require permits for new or modified major stationary sources (section 172(b)(6)).

b. Sections 172(b)(11) (A)–(C) and 110(a)(3)(D): As noted earlier, the date by which the national ambient air quality standards for ozone and carbon monoxide must be attained can be extended up to December 31, 1987 if a state can demonstrate that it cannot reach attainment by December 31, 1982 after applying all reasonably available control measures.

For states granted an extension beyond 1982 for attainment of the ozone and carbon monoxide standards, Part D of the Clean Air Act imposes the following additional requirements:

—Establish a program for analyzing alternative sites for construction of major stationary sources (section 172(b)(11)(A)),
—Establish a specific schedule for implementation of an automobile emissions inspection and maintenance program (section 172(b)(11)(B)),
—Identify other measures necessary to provide for attainment no later than December 31, 1987 (section 172(b)(11)(C)), and
—Establish, expand or improve public transportation measures to meet basic transportation needs as required in Section 110(c)(5)(B) (section 110(a)(3)(D)).

Regarding this last requirement, the statute, its legislative history and congressional intent all clearly demonstrate that section 110(a)(3)(D) did make section 110(C)(5)(B) a Part D requirement for all purposes, including the restrictions on growth and funding contained in sections 110(a)(2)(I), 176(a) and 316 of the Clean Air Act. Thus, as discussed in section V of this notice, failure to submit an approvable plan required by section 110(c)(5)(B) will result in the imposition of certain of these restrictions. Furthermore, section 110(c)(5)(B) is independently a Section 172 element because of its requirements that the plan revision meet the written evidence requirements of Part D and be coordinated with Part D.

All of the requirements discussed in this and the preceeding subsection are further discussed and elaborated upon in a "General Preamble for Proposed Rulemaking on Approval of State Implementation Plan Revisions for Nonattainment Areas" published in the April 4, 1979 Federal Register (44 FR 20372). The reader is referred to this notice for a complete discussion of SIP revision requirements; these are not repeated in great detail in this notice. The reader is also referred to several supplements to this April 4, 1979 notice which were published in Federal Register notices on July 2, 1979 (44 FR 38583), August 28, 1979 (44 FR 50371), September 17, 1979 (44 FR 53761) and November 23, 1979 (44 FR 67182).

3. Effect on the New York City Metropolitan Area. The New York City metropolitan area is affected by the requirements just discussed in several ways. First, since it has eliminated the bridge toll requirement in its SIP, the State must develop a plan to meet basic transportation needs (a "BTN Plan"). Also, since this area is a nonattainment area, the State must revise its SIP to meet the requirements of Part D of the Clean Air Act, including the implementation of all reasonably available control measures as expeditiously as practicable (an "Attainment Plan"). Lastly, since the State has requested an extension until 1987 to attain the national ambient air quality standards for carbon monoxide and ozone in the New York City metropolitan area, the SIP revision must also meet the additional Part D requirements for receiving the extension. These requirements include the development of a BTN Plan.

C. New York State Submittals and EPA Actions to Date

1. BTN Plan. On October 19, 1977 the Governor of the State of New York took advantage of the provisions of Section 110(c)(5) of the Clean Air Act and applied to the Administrator of EPA to eliminate the SIP requirement for tolls on all East and Harlem River bridges. On December 5, 1977, by notice in the Federal Register (42 FR 61453), EPA removed the bridge toll requirement from the SIP. Subsequently, in a June 20, 1978 letter to the Governor (Addendum A to this notice), the EPA Administrator summarized the requirements for a SIP revision under Section 110(c)(5) and provided the State with guidance on what EPA believed would be needed to satisfy them.

On July 26, 1978, the State held a public hearing on the SIP revision required by section 110(c)(5) of the Clean Air Act. This revision could not fully address the EPA Administrator's June 20 guidance because the guidance was received by the State after the revision had been printed. The revision consisted of a document entitled, "New York State Air Quality Implementation Plan for Mass Transit Improvements in the New York City Metropolitan Area—June 1978," which was submitted to EPA on August 6, 1978.

In a January 29, 1979 Federal Register notice (44 FR 5693) EPA proposed disapproval of this initial August 6 submittal. At that time, however, the State was preparing a supplemental submittal. A public hearing was held on the supplemental submittal on March 16, 1979 and it was submitted to EPA on May 24, 1979. The supplemental submittal was entitled, "New York State Air Quality Implementation Plan, The Moynihan/Holtzman Amendment Submission: Transit Improvements in the New York City Metropolitan Area, May 1979." It is this May 24, 1979 BTN Plan submittal that is dealt with in today's notice.

2. Attainment Plan. Also on May 24, 1979, the State submitted a SIP revision to meet the other requirements of Section 172 of the Clean Air Act. With the exception of the part of this plan related to public transportation, the plan was conditionally approved by EPA on May 21, 1980 (45 FR 33981). The contents of this plan and the history of its development are summarized in EPA's notice of proposed rulemaking which was published in the Federal Register on December 10, 1979 (44 FR 70754). Finally, on May 21, 1980 the State submitted supplemental information dealing in part with public transportation issues.

III. Description of the New York Submittals

A. Introduction

While they represent two distinct programs, the State's BTN and Attainment Plans contain many elements in common. In the BTN plan the State has presented a program of public transportation improvement measures which it believes will provide for the basic transportation needs of the New York City metropolitan area. The public transportation improvement program contained in the Attainment Plan sets forth more ambitious programs than the BTN Plan; the BTN Plan's improvement program is contained within the Attainment Plan. Because of this the State believes that the implementation of the Attainment Plan

will provide for the New York City metropolitan area's basic transportation needs as well as provide for attainment and maintenance of air quality standards.

B. Summary of the BTN Plan's Content

The BTN Plan consists of:

- An introduction,
- A discussion of the relationship between public transportation and air quality,
- An identification of public transportation improvement measures necessary to meet basic transportation needs,
- A summary of the public transportation improvement measures contained in the Attainment Plan,
- An identification of the funding sources required to advance the public transportation improvement programs contained in the BTN and Attainment Plans,
- A calculation of the emissions reductions expected from the BTN Plan and the public transportation measures in the Attainment Plan, and
- Responses to public comments received at the State's March 16, 1979 public hearing.

The contents of each of these sections of the BTN Plan are described in the remainder of this subsection. The reader is referred to Addendum B to today's notice for a list of the specific measures which are contained in the BTN Plan as part of the State's program to meet basic transportation needs.

1. Introduction. The introduction states that the BTN Plan sets forth a public transportation improvement program designed to meet the basic transportation needs of the New York City metropolitan area and identifies the funding necessary to implement the plan. It is claimed that the plan also provides for emission reductions equivalent to those which would be achieved by the imposition of tolls.

2. Relationship of Public Transportation to Air Quality. The BTN Plan states that public transportation improvement will do little to reduce automobile generated air pollutants. This section also discusses recent trends in public transportation financing.

3. Basic Transportation Needs. This section of the BTN Plan defines basic transportation needs in terms of five criteria: fare stability, operational safety and reliability, comfort, environment and security, and availability and convenience of service. This section also sets forth the State's program of public transportation improvements to meet basic transportation needs.

4. Attainment Plan Transit Improvement Measures. The BTN Plan contains a summary of the public transportation improvement measures included in the Attainment Plan. These measures are proposed for five general areas: management, fare stability, public transportation rehabilitation, improving and promoting mass transit service, and improving transit support systems.

5. Funding for Public Transportation Measures. This section of the BTN Plan describes the funding sources and amounts required to advance the Attainment and BTN Plans.

6. Equivalent Emissions Reductions. The State calculated that a package of public transportation measures must reduce vehicle miles traveled (VMT) in the nine-county region by 0.4 percent to be comparable with the VMT reduction anticipated by the imposition of tolls on the East and Harlem River bridges. The State concludes that the fare stabilization strategy alone will achieve this VMT reduction. The State commits to monitoring the impact of the other service improvement strategies upon regional VMT.

7. Responses to Comments Received at the March 16, 1979 Public Hearing. Topics discussed in this section of the BTN Plan include public hearing comments related to:

- Public hearing arrangements,
- Definition of basic transportation needs,
- The effect of inflation upon the financial estimates in the plan,
- The state's projections of available federal funds,
- The State's projection of the Metropolitan Transportation Authority (MTA) operating budget,
- Westway interstate highway trade-in, and
- The requirement that the strategy substituted for bridge tolls be a transit strategy.

C. Summary of the Attainment Plan's Content

The Attainment Plan submitted by the State also contains a program of public transportation improvement measures. This program is presented in the SIP documents, "Volume I—New York State Air Quality Implementation Plan for Control of Carbon Monoxide and Hydrocarbons in the New York City Metropolitan Area" and "Volume II—Detailed Descriptions of Reasonably Available Control Measures." The reader is referred to Addendum C to today's notice for a list of the specific measures which are contained in the Attainment Plan.

As noted in EPA's December 10, 1979 (44 FR 70754) Federal Register notice of proposed rulemaking concerning the non-public transportation elements of the Attainment Plan, there are discrepancies between the contents of Volumes I and II. This situation also exists for the public transportation measures. The description of the Attainment Plan which follows generally relates to material contained in Volume I, but EPA considers that the material in Volume II is also part of the SIP.

The Attainment Plan consists of the following public transportation improvement elements:

- Management of the transit system,
- Fare stabilization,
- Public transit rehabilitation, and
- Improvements and methods of promoting transit service.

These elements are briefly summarized as follows.

1. *Management of the Transit System.* The State is committed to implement certain actions aimed at achieving improved transit operations by offering better service through better management techniques. These are the establishment of the post of Executive Director of the MTA, the development of a plan to streamline the New York City transit capital budget approval process, and the implementation of the recommendations of the MTA Management Study.

2. *Fare Stabilization.* In the Attainment Plan it is stated that, "The Governor of New York and the Mayor of New York City are committed to maintaining the present transit fare." The immediate objectives are to hold the current fare through 1981 and to institute a policy of fare stabilization relative to the cost of living over the long term.

3. *Public Transit Rehabilitation.* This measure appears in both the Attainment Plan and the BTN Plan. The measure proposes to accelerate the State's existing rehabilitation program for transit stations, equipment, and maintenance facilities.

4. *Improvements to and Methods of Promoting Mass Transit Service.* This measure is intended to improve service by reducing travel time, improving coordination, and providing passenger information.

IV. EPA Review and Proposed Action

A. Introduction

This section discusses EPA's proposed findings with regard to the adequacy of the State's SIP revision submittals. The SIP has been reviewed against each of the requirements of the Clean Air Act described in Section II.B of today's notice.

As noted earlier, this Federal Register notice is concerned only with the New

York State BTN Plan, which was submitted to EPA on May 24, 1979, and the public transportation improvement portion of its Attainment Plan, which also was submitted to EPA on May 24, 1979. EPA's review of the remainder of the Attainment Plan appeared in the Federal Register on December 10, 1979 (44 FR 70754) and May 21, 1980 (45 FR 33981).

In the review discussed in today's notice EPA relied, in part, on the findings contained in an EPA consultant report, EPA 902/4-79-004, "Evaluation of the State Implementation Plan Revision Submitted by New York State in Fulfillment of the Moynihan-Holtzman Amendment" prepared by A. L. Kornhauser and Associates of Princeton, New Jersey. This document is available from the National Technical Information Service, publication number PB 80 150279.

B. BTN Plan Requirements and EPA Review

1. *The SIP may be revised to eliminate the requirement for bridge tolls upon application of the Governor.* Section 110(c)(5)(A) of the Clean Air Act requires such application to include a certification that the Governor will revise the SIP by August 7, 1978 to meet the provisions of Section 110(c)(5)(B). The Governor made the necessary application and certification in an October 19, 1977 letter to the EPA Administrator. In a December 5, 1977 notice in the Federal Register (42 FR 61453) the bridge toll requirement was removed from the SIP.

2. *The SIP must be revised to include comprehensive measures to establish, expand or improve public transportation to meet basic transportation needs.* a. Method of Analysis: In order to implement this provision of Section 110(c)(5)(B)(i) of the Clean Air Act the SIP should contain an identification of what basic transportation needs exist in an area, it should evaluate how the area's public transportation system currently meets or does not meet these needs, and it should identify any additional measures which are necessary to meet these needs.

Identification of basic transportation needs includes consideration of what level of service for passengers is adequate. As such, EPA believes that a public transportation system that meets basic transportation needs should be:

- Extensive in coverage and frequent in service,
- Reliable and rapid,
- Attractive and comfortable,
- Safe,
- Secure from crime, and
- Reasonably and stably priced.

Since Congress envisioned that a public transportation system is essential to the success of transportation control measures seeking to reduce motor vehicle related air pollution, a system that meets basic transportation needs would be capable of serving as an attractive, effective alternative to the automobile. As noted in the Administrator's June 20, 1978 letter to New York State, the public transportation system should result in travel times and costs which are comparable to those of the private automobile. In addition, the system should be adaptable to the specialized needs of its users and include passenger amenities which make public transportation attractive, convenient and comfortable.

Basic transportation needs should be defined by performance standards. Performance standards should reflect the needs of passengers and be adapted to operational practices. The standards also should be quantitative to allow for periodic assessments of the system's adequacy.

After identifying basic transportation needs, this definition and its associated performance standards should be applied to the existing public transportation system to determine the degree to which the needs are being met. The final step is to identify transportation improvement measures that are capable of correcting any deficiencies in the existing system. Those measures necessary to meet basic transportation needs should be included in the SIP. This approach was generally used by the State in developing its BTN Plan.

b. The State's Identification of Basic Transportation Needs. (1) Indicators: The State's BTN Plan identifies five indicators of basic transportation needs. These are (1) fare stability, (2) operational safety and reliability, (3) comfort, (4) environment and security, and (5) availability and convenience of service. EPA believes that these are appropriate. Taken as a whole they are capable of providing a comprehensive picture of the service requirements of the public transportation system.

(2) Performance Standards: The State indicators of basic transportation needs are defined in part by performance standards. These standards were not used by EPA in its evaluation of the approvability of the State's BTN Plan. However, it should be noted that the performance standards selected by the State often are lax when compared to other established standards or existing conditions. Also, at times they are imprecise and vague, which would tend to make them difficult to implement or monitor. So that the State may take advantage of EPA's comments in any future revision to its BTN Plan, a discussion of these performance standards and the State's assessment of the ability of the existing public transportation system to meet them appear in Addenda D and E to today's notice, respectively.

c. Adequacy of Public Transportation Improvement Measures Identified by the State as Being Necessary. (1) Introduction: The BTN Plan identifies the measures that will be taken by the State to meet the basic transportation needs it has identified. The public transportation improvement measures identified consist primarily of capital project improvements and, to a lesser extent, operational and managerial improvements. Financial costs associated with the improvements also were provided.

EPA's review of the adequacy of the operational and managerial improvements is based in part on recent recommendations by the Governor and the MTA. Both Governor Carey and the MTA have recognized the need for operational improvements, including an improved managment system for the MTA and an end to the deferral of preventive maintenance.

EPA's assessment of the adequacy of the capital project improvements is based, in part, on the improvements recommended in a New York City Department of City Planning document, "A New Direction in Transit." According to the State this document was relied upon in the development of its BTN Plan. "A New Direction in Transit" classified projects to upgrade the New York City transit system according to five levels of priority.

Level A corresponds to that which could be done with recent levels of funding. It provides only for meeting "the indispensable near-term needs of the existing transit system." It specifically does not provide for the means to maintain safety and ensure reliable service over the long term. Level B corresponds to the further projects which could be completed with additional funds earmarked under the State's "Accelerated Transit Program" (which generally corresponds to the program in the region's Transportation Improvement Program). Level C represents projects "essential to maintain safety, improve reliability and operating efficiency, and provide a reasonable level of passenger comfort over the long term." Levels D and E include other projects which have been suggested, but which were not thought to be essential.

Whereas the State's BTN Plan identifies a capital program requiring $427 million in average annual expenditures for the entire nine-county New York City metropolitan area, Level C in "A New Direction in Transit" identifies an annual need of $553 million (in 1977 dollars) for New York City alone. This $553 million figure inflates to $721 million when placed in terms of future-year dollars (the convention used in the SIP). The capital improvement program in the State's BTN Plan falls somewhere between Levels A and B of "A New Direction in Transit."

The State's BTN Plan does not explain in any detail why public transportation improvement measures less extensive than those contained in Level C (and less than Level B) can be justified as satisfying the area's basic transportation needs. EPA believes that a reasonable definition of basic transportation needs incorporates consideration of long-term as well as short-term needs. The major difference between Levels A and C in "A New Direction in Transit" is that the former is specifically denoted as insufficient to meet long-term minimum safety and service requirements while the latter is the smallest program which is viewed by New York City as adequate to address essential long-term needs.

In addition to the fact that the State's BTN Plan does not reconcile the difference in basic transportation needs between those it identifies and those identified in the Department of City Planning document, it also differs with other official documents. Such documents include the MTA's "Ten Year Capital Needs Report" and the Long Island Railroad's "Long Island Railroad Short-Term Needs." These documents identify additional projects needed to meet minimum requirements and would necessitate funding greater than that identified in the State's BTN Plan.

(2) Fare Stability: This standard is defined as a fare which increases at a rate which is less than that of the cost of living.

(a) Operational and managerial improvement measures: The State's BTN Plan identifies the need for continued application of operating cost efficiencies to maintain long-term fare stability. A document entitled "The New York MTA Management Study" is credited with the development of recommendations for improved employee productivity and management practices to achieve this goal. While EPA recognizes that these operational and managerial improvements are of critical importance, they do not appear to be sufficient to maintain fares at their current levels. While the MTA is announcing fare increases of approximately 20 percent to meet large operating deficits, this increase will have to be evaluated against the State's fare stability performance standard. This issue of operating funds is discussed more fully in Section IV.B.4 of this notice.

(b) Capital project improvement measures: The State's BTN Plan identifies capital improvements which can result in the reduction of operating costs thereby helping to maintain the long-term stability of the fare. Such improvements include new subway cars and buses, rehabilitation and replacement of subway shops, subway yards and bus maintenance facilities, and improved electric power equipment. However, an estimate of the long term impact of these capital improvements on the operating budget is not provided in the State's BTN Plan. Thus EPA cannot determine the extent to which the capital improvement measures assist in meeting the basic need for fare stability.

(3) Operational Safety and Reliability: The operational safety standard is defined as an accident rate which is as safe or safer than the private automobile and not substantially greater than comparable public transportation systems elsewhere in the county. The reliability standard is defined as 90 percent average daily reliability.

(a) Operational and managerial improvement measures: The State's BTN Plan again identifies that the "MTA Management Study" will result in improved operational safety and reliability through improved vehicle maintenance and repair practices. A program of bus depot security is also noted as a means to improve operational safety and reliability by reducing vandalism. The MTA policy to defer maintenance, as noted by the Governor in a February 20, 1980 statement to the New York State Legislature, "has a serious impact on the overall efficiency and productivity of the systems in terms of equipment failures, delays, and the threat to public safety." The MTA also has indicated that deferred maintenance should be ended. Consequently, it is evident to EPA that the policy of deferred maintenance interferes with the ability of the transit system to meet basic transportation needs. The State's BTN Plan does not include operational and managerial improvements to provide for an adequate preventive maintenance program. Given this deficiency, EPA cannot conclude that the operational and managerial improvement measures meet the basic need for operational safety and reliability.

(b) Capital project improvement measures: The State's BTN Plan identified numerous capital improvements as part of the State's operational safety and reliability program. These include improvements to line structures, tracks, line equipment, signals, communication and power equipment, emergency equipment, subway cars, service vehicles, and commuter rail cars. The BTN Plan also includes purchase of new subway cars, buses and commuter rail cars.

A number of the projects identified in Level C of "A New Direction in Transit," which are not included in the State's BTN Plan, appear to be fundamental to the long-term adequacy of the area's public transportation system. The State's BTN Plan contains no explanations as to why these Level C projects, which are identified as essential by the New York City Department of City Planning, are not included. Given these significant discrepancies, EPA cannot conclude that the capital project improvements meet the basic need for operational safety and reliability.

(4) Comfort: The comfort standard is defined in terms of three characteristics: crowding, air conditioning, and noise levels.

The crowding standard for subways is four square feet per passenger per line in the peak hour. The crowding standard for commuter rail lines is between 8.2 and 7.0 square feet per passenger per line in the peak hour. No crowding standards is set for buses.

The comfort standard also requires that all public transportation vehicles be air conditioned and heated.

No noise standard is set.

(a) Operational and managerial improvement measures: The State's BTN Plan identifies some operational and managerial improvements to meet the performance standards for comfort. These include studies of service requirements of rail and bus operations. The BTN Plan also identifies the possible need for increases in service to meet the performance standards for crowding. The plan does not, however, identify maintenance requirements essential for fully meeting comfort standards. This omission makes it evident that the State has not adequately assessed the need for operational and managerial improvements in this regard. Consequently, EPA cannot conclude that the BTN Plan contains the commitments to implement necessary improvements.

(b) Capital project improvement measures: The State's BTN Plan identifies capital project improvements needed to meet the performance standards for comfort. These improvements include new subway and

commuter rail cars, air conditioning of existing subway cars, new buses, and station rehabilitation. The plan contains no analysis of how these improvements serve to meet the performance standards. Moreover, the New York City Department of City Planning has identified the need for additional projects to meet Level C needs. Consequently, EPA cannot conclude that the capital project improvements contained in the State's BTN Plan meet the basic transportation need for comfort.

(5) Environment and Security: This standard is defined as stations which are secure from crime and vandalism, brightly lit, supplied with easy to understand signs, kept in good repair, and kept clean of litter, dirt, and foul odor.

(a) Operational and managerial improvement measures: The State's BTN Plan identifies for subway stations some operational and managerial improvements designed to meet the performance standards for environment and security. These include cleaning and minor repairs. However, the plan contains no discussion of the environment requirements for any component of the system other than subway stations. Therefore, EPA cannot conclude that the program meets the basic transportation need for environment.

The Attainment Plan discusses a New York City Department of Transportation survey of the public's feeling as to various aspects of the transit system. The most important issue was found to be crime. The BTN Plan notes that New York City maintains a separate police force for the transit system at an annual cost of about $100 million. The Plan also notes that the Mayor of New York City increased the use of transit police (at an estimated cost of an additional $15 million per year) which "had a measurable effect on crime and has helped improve the rider's sense of security." However, the degree of police protection needed to meet the security standard is not clear. Further, it should be noted that the recent increase in police protection has been discontinued by the City and is not included in the State's BTN Plan. Therefore, EPA cannot conclude that the BTN Plan meets the basic transportation need for security.

(b) Capital project improvement measures: The State's BTN Plan identifies some capital project improvements to meet the performance standards for environment and security. These include an increase in subway station rehabilitation, lighting improvements, and a closed circuit television system at some stations.

As noted, the BTN Plan does not assess the environment and security requirements of any component of the system other than subway stations. In addition, the BTN Plan does not indicate to what extent its program of improvements will meet the standards which have been established. Given these omissions, EPA cannot conclude that the capital project improvements contained in the State's BTN Plan meet the basic transportation need for environment and security.

(6) Availability and Convenience of Service: This standard is defined as a system which serves ninety percent of the population in the dense portion of the urban area with an arrangement of routes that is convenient for travel desires and about which information is both comprehensible and available. It must assure that the special mobility needs for the elderly and handicapped are met at reasonable cost.

(a) Operational and managerial improvement measures: The State's BTN Plan identifies operational and managerial improvements to meet the performance standards for availability and convenience of service. These include service sufficiency studies, accessibility studies, and park-and-ride studies. EPA agrees with the State's contention as to the adequacy of the availability of the public transportation services in the New York City metropolitan area. However, with regard to the system's convenience, the State has not fully identified a program of improvements. Consequently, until the studies are completed and improvement measures are identified, EPA cannot conclude that the operational and managerial improvement measures meet the need of convenience.

(b) Capital project improvement measures: Few capital projects to meet the performance standard for availability and convenience of service are included in the State's BTN Plan. The State does not indicate to what degree the improvements which are included in the plan meet the performance standard. Consequently, EPA cannot conclude that the State's capital improvement program meets the basic transportation need of availability and convenience of service.

(7) Conclusion: As indicated by the preceding discussions, EPA cannot conclude that the State's BTN Plan provides adequate and sufficient measures to establish, expand, or improve public transportation to meet basic transportation needs. Inadequate evidence is provided that implementation of the public transportation improvement measures selected by the State will result in the meeting of basic transportation needs.

3. The SIP must include comprehensive measures which implement transportation control measures necessary to attain and maintain national ambient air quality standards. The inclusion of this requirement in Section 110(c)(5)(B) of the Clean Air Act demonstrates the importance of the link between meeting basic transportation needs and the attainment and maintenance of ambient air quality standards. Since the State's comprehensive program of transportation control measures, including public transportation improvement measures, is included in the State's Attainment Plan, this requirement is discussed in Section IV.C.2. of this notice rather than here.

4. For the purpose of implementing public transportation measures as would be necessary to meet basic transportation needs, the revised SIP must include requirements to use federal grants and state or local funds in a manner consistent with the terms of their legislation. a. Introduction: This requirement of section 110(c)(5)(B) of the Clean Air Act necessitates a review of all federal, state, and local revenue sources to determine which funds may, consistent with the terms of their legislation, be applied to public transportation. The State's BTN Plan presents an ambitious and expensive program of public transportation improvement measures. A large portion of the funding to support this program is identified as being from federal sources. Significant amounts of funds are also identified as coming from State and local governments in addition to fare box revenues. Based on information available to EPA, it is evident that the sources of funds identified in the State's BTN Plan are inadequate to cover program expenses. In addition, program expenses appear to be underestimated, further compounding the problem. Moreover, since EPA has found that it is unlikely that basic transportation needs would be met if all public transportation improvement measures contained in the State's BTN Plan were implemented, funds needed for this purpose are likely to be even greater than indicated by the State.

In this section of today's notice EPA reviews the amount of funds needed to support the program of public transportation improvements identified by the State in its BTN Plan. EPA also reviews identified funding sources to see if they are being used in the manner indicated by the Clean Air Act. These

reviews are organized in terms of operating and capital programs.

b. Operating Program: The BTN Plan presents the 1979–1983 operating budget for the New York City Transit Authority (NYCTA) and the 1978–1983 operating budget for the Metropolitan Transportation Authority's commuter rail operations. The budgets show a cumulative cash surplus for all years for the NYCTA and a small deficit for commuter rail operations. Although the operating budgets contained in the State's BTN Plan generally demonstrate adequate funding for its public transportation improvement program, the financial projections of the MTA, provided in a May 16, 1980 memorandum from its Chairman to the Governor indicated that without action such as the recently enacted gross receipts tax and fare increases there would be a deficit in the past State fiscal year of $58 million and predicated deficits of $330 million, $499 million, $632 million and $770 million for the State fiscal years 1981, 1982, 1983, and 1984, respectively.

Factors which contribute to the inaccuracy of the State's operating budget as presented in its BTN Plan are:

- The availability of less federal operating assistance than identified in the BTN Plan,
- Wage settlements for employees of the NYCTA and Long Island Railroad higher than identified in the BTN Plan,
- Greater fuel and power expenses than identified in the BTN Plan, and
- The possibility of less Triborough Bridge and Tunnel Authority (TBTA) funds available than identified in the BTN Plan, despite a recent increase in tolls on TBTA facilities.

The new tax and fare increases should provide adequate funds to meet the 1981 deficit, but they do not eliminate the deficits in the subsequent years. Consequently, EPA finds that the budgets do not identify adequate resources for operating the public transportation system in a manner consistent with the program contained in the State's BTN Plan.

In addition, EPA believes that several public transportation improvement measures needed to meet basic transportation needs are not accounted for in the budgets. These include:

- Maintenance costs necessary to end the program of deferred maintenance, estimated at $100 million per year,
- Additional police security at a minimum of $15 million per year, and
- Increased operating costs associated with defects in the R–46 subway car trucks.

The State's BTN Plan does not identify the need for any additional operating funds to meet the basic transportation needs of the New York City metropolitan area. However, as discussed, it appears that a substantial shortfall in operating funds does exist. Consequently, the State must use all available funds to meet this shortfall.

EPA recognizes that efforts are being made by the Governor of New York, the State Legislature and the MTA to make additional funds available for assisting in the operation of the public transportation system. EPA also recommends that operating expenses be examined to determine whether some may be more appropriately treated as capital expenses. As discussed in the next subsection of this notice, capital funds may be available in addition to those identified in the State's BTN Plan.

Consequently, though it appears that the State is using all operating funds currently available, additional funding is clearly necessary.

c. Capital Program: The State's BTN Plan presents a six-year annual capital budget. This information is included in Table 1 of today's notice. It should be noted that Table 1 reflects revised expense and revenue information submitted by the State to EPA on May 21, 1980.

Although the capital financing program contained in the State's BTN Plan generally demonstrates the availability of adequate funds, it is evident that a substantial funding deficit exists. This conclusion results from the following circumstances:

Table 1.—*6-Year (1978–1983) BTN Plan Capital Budget*

[Dollars in millions per year]

Expenses:	
Safe and reliable operations	331
Comfort	45
Environment and security	51
	427
Revenues:	
UMTA [1] grants	339
Matching funds:	
State	44
Port Authority [2]	20
Local governments	20
Other	134
	557

[1] Urban Mass Transportation Administration.
[2] Port Authority of New York and New Jersey.

- The future UMTA grants to this region are not expected to increase in the magnitude projected in the State's submission. Therefore, there is no assurance that the State will be receiving the $339 million per year it identified as needed.
- The "windfall profits" tax on oil revenues cited by the State as an additional revenue source does not appear able to produce the anticipated significant increase in funds available for public transportation improvements.
- Statements made by the Governor in a March 27, 1980 letter to the Secretary of Transportation indicate that levels of federal funding assumed by the State are not being made available.
- Recently, the Port Authority of New York and New Jersey announced that it was planning to defer future commitments to non-revenue producing capital projects (e.g., public transportation projects). The BTN Plan, in part, relies upon this source of funds.

On February 13, 1980 the State provided EPA with information which attempts to demonstrate that the capital program funding requirements in its BTN Plan will be met for the first year. An identification of needed funds and their sources are provided in Table 2 of today's notice. However, based on the preceding discussion, EPA believes that even if the State can obtain needed funds in the first year, it is highly unlikely that adequate funds will be available in future years of its capital improvement program. Table 3 provides an historical review of UMTA capital funds awarded to the New York City metropolitan area.

Table 2.—*Comparison of 1979 Capital Funds Committed by New York State to the Level of Funding Required by the BTN Plan* [1]

[Dollars in Millions]

	Committed	Plan
Expenses:		
New York City:		
NYCTA/MaBSTOA [2]	322	321
SIRTOA [3]	4	8
Private bus	9	17
Staten Island Ferry	2	5
Commuter rail	82	70
Suburban bus	7	8
	426	427
Revenues:		
Federal sources: [4]		
UMTA [5] grants		250
FHWA [6] grants		44
State sources:		
1979 bond issue		95
Other		14
Port Authority [7] bond issue		20
		426

[1] Data supplied by New York State.
[2] New York City Transit Authority/Manhattan and Bronx Surface Transit Operating Authority.
[3] Staten Island Rapid Transit Operating Authority.
[4] Includes State matching funds.
[5] Urban Mass Transportation Administration.
[6] Federal Highway Administration.
[7] Port Authority of New York and New Jersey.

Table 3.—*Historical Review of UMTA Capital Funds New York City Metropolitan Area*

[Approved Grants to the New York City Metropolitan Area]

Federal fiscal year	NYCTA	Commuter	Other	Total	National grants
1974–75	[1]$175.00	$10.80	$22.46	$208.26	$1,196.60
1975–76	202.40	19.85	0.96	223.21	1,092.19
Transition quarter	60.00	0	0	60.00	253.91

Table 3.—*Historical Review of UMTA Capital Funds New York City Metropolitan Area*—Continued

[Approved Grants to the New York City Metropolitan Area]

Federal fiscal year	NYCTA	Commuter	Other	Total	National grants
1976-78	165.68	117.84	27.91	311.43	1,250.00
1977-78	183.60	42.76	1.14	227.50	1,400.00
1978-79	213.00	25.00	15.00	253.00	1,525.00

[1] Adjusted to agree with UMTA records.

Since there is an identified shortfall in capital funds, the State must demonstrate, for the purpose of implementing necessary public transportation improvements, the use of additional federal grants and State or local funds as may be consistent with terms of the legislation providing such grants and funds. Currently the State is receiving a substantial amount of funds from the Department of Transportation. It is not likely that additional funds will become available from the Department of Transportation to meet the identified shortfall. Consequently, the State must examine existing sources so as to maximize the amount spent on public transportation. Such sources of funds administered by the Department of Transportation include Federal Aid to Urban Systems funds and the trade-in of interstate highways, both of which are provided for by Title 23, United States Code. In addition, other federal agencies, such as the Department of Housing and Urban Development and the Department of Commerce, administer programs which could be applied to improvements. The BTN Plan identifies the use of some of the Department of Transportation monies, but claims that additional transportation funds are not readily available or needed. Federal funding sources other than from the Department of Transportation are not examined in detail, nor are any additional state or local sources identified. Nevertheless, under the provisions of the Clean Air Act the State must initiate action for the use of such monies insofar as is necessary to meet the funding shortfalls. Until this is done, the State is not utilizing all available and needed funding sources and ETA cannot conclude that the BTN Plan is adequate.

5. The SIP must include comprehensive measures that provide for emission reductions equivalent to the reductions which were expected to be achieved through the eliminated tolls. Section 110(c)(5)(B) of the Clean Air Act requires that the BTN Plan contain a determination of the emission reductions which were expected to result from the bridge toll strategy and a demonstration that such reductions now will be obtained from public transportation improvement measures.

The BTN Plan includes an analysis of the emission reductions that were expected to be achieved through the eliminated tolls. The State estimates that a reduction of 0.4 percent in the region's vehicle miles traveled (VMT) was expected. The plan includes a demonstration that such a reduction in VMT will result from the fare stabilization component of its proposed public transportation improvements. It contains an estimate of the impact of each measure on motor vehicle use (i.e., vehicle miles traveled). EPA has estimated the impact of these measures based on the 1977 base year hydrocarbon inventory. These reductions and impacts are:

Measure	VMT reduction (percent)	Hydrocarbon reduction (tons)
Fare stabilization	1	2,250
Service improvements	0 5	1,125
Improved passenger amenities and/or rehabilitation	(1)	(1)

[1] No estimate

The State claims that its aim is to keep existing transit riders from switching to auto travel and to reduce the rate of increased auto use by an amount at least equal to the reduction forecast for the bridge toll strategy in its 1973 plan. The demonstration that emission reductions equivalent to those which were expected from tolls is considered adequate by EPA; however, this conclusion will have to be reassessed in light of the transit fare increases.

It should be noted that the BTN Plan contends that public transportation improvements will do little to reduce automobile generated air pollution. The demonstration just discussed tends to refute this contention. There is a strong relationship between the adequacy of public transportation service and its level of usage. A deteriorating public transportation system certainly cannot attract new riders and will have difficulty maintaining existing users.

6. The SIP must include written evidence requirements of Part D, of the Clean Air Act, as follows. a. The SIP must be adopted by the State only after adequate notice and public hearing: This is a requirement of section 172(b)(1) of the Clean Air Act. The State's BTN Plan was adopted by the Governor after a public hearing was held in Manhattan on March 16, 1979.

The State has provided documentation to identify that the necessary notices, public hearing and adoptions were carried out in such a manner as to be found acceptable to EPA. The public hearing was held after at least 30 days of notice.

b. The SIP must include an accurate, current emissions inventory: Because this requirement of section 172(b)(4) of the Clean Air Act is mostly associated with the public transportation improvement measures identified in the Attainment Plan, it is discussed in Section IV.C.4 of today's notice rather than here.

c. The SIP must provide identification and commitment of the necessary resources to carry out the Part D provisions of the plan: The BTN Plan's ability to meet this requirement of section 172(b)(7) of the Clean Air Act has been discussed in detail in Section IV.B.4 of this notice. As noted, the plan is inadequate in that it fails to include the capital and operating funds required to advance a program to meet basic transportation needs.

d. The SIP must contain schedules of compliance and such other measures as may be necessary to meet the requirements of Part D: This requirement of section 172(b)(8) of the Clean Air Act is discussed in Section IV.C.7 of today's notice.

e. The SIP must give evidence of the public, local government and state legislative involvement and consultation in accordance with Section 174 of the Clean Air Act: This requirement of section 172(b)(9) of the Clean Air Act refers to the provisions of section 174(b) which require that the preparation of the SIP must be coordinated with the continuing, cooperative and comprehensive transportation process required under section 134 of Title 23, United States Code. EPA received no evidence that the State's BTN Plan was developed with such consultation.

Specifically, the definition of basic transportation needs and the financial budgets contained in the BTN Plan do not appear to have been developed in consultation with local government officials and agencies responsible for ensuring that basic transportation needs are properly developed and implemented, such as the MTA and the Tri-State Regional Planning Commission. EPA questions whether such consultation has taken place since endorsements of the BTN Plan have not been made by such officials and agencies. In fact, quite the opposite has occurred. For example, the MTA Board has stated officially that annual capital spending of at least $800 million is required to meet basic needs in contrast to the $427 million figure contained in the BTN Plan. Moreover, the BTN Plan was not endorsed by the Tri-State Regional Planning Commission, the

region's Metropolitan Planning Organization. The State's BTN Plan was not submitted for comment to the Citizens Advisory Committee to the New York City Transportation Coordinating Committee or to the Permanent Citizens Advisory Committee for the MTA.

Comments received at the March 16, 1979 public hearing were largely critical of the adequacy of the BTN Plan and this fact further suggests that the public was not consulted in the plan's development. The main thrust of comments made by local elected officials was that the plan is inadequate. In addition, the former Chairman of the City Planning Commission expressed disappointment that the BTN Plan did not contain the degree of explanation necessary to clarify the differences between it and the transportation needs identified in "A New Direction in Transit."

Based on the absence of evidence that the BTN Plan was developed in consultation with the public, local government officials and the State legislature, EPA finds that this requirement has not been met.

f. The SIP must identify and briefly analyze the air quality, health, welfare, economic, and social effects of the plan provisions chosen and summarize the public comment on the analysis: This is a requirement of Section 172(b)(9) (A) and (B) of the Clean Air Act.

As discussed in Section IV.B.5 of this notice, the BTN Plan contains an analysis of the air quality impact of its public transportation improvement measures. No analysis of other impacts is explicitly presented in the BTN Plan. However, as will be discussed in Section IV.C.8 of this notice, an analysis of other impacts is presented in the Attainment Plan. EPA finds that the use of this analysis for the BTN Plan is acceptable and that this analysis is adequate.

g. The SIP must contain written evidence that the State and other governmental bodies have adopted the necessary requirements, schedules and timetables for compliance in a legally enforceable form: EPA finds that this requirement of section 172(b)(10) of the Clean Air Act has been met in that no additional legal authority is necessary to implement the BTN Plan.

h. The SIP must contain written evidence that the State and other governmental bodies are committed to implement and enforce the appropriate elements of the SIP: This is also a requirement of section 172(b)(10) of the Clean Air Act.

Written evidence that the State and other appropriate governmental bodies are committed to implement many of the public transportation improvement measures is contained, to a limited extent, in the Tri-State Regional Planning Commission Transportation Improvement Program (TIP) and other Tri-State documents. These documents, which contain most of the capital improvement projects identified in the State's BTN Plan have been endorsed by agencies responsible for their implementation. However, as part of this endorsement, evidence is needed to ensure that adequate reporting will be performed so as to monitor the success of the implementation efforts in meeting basic transportation needs. Such evidence is provided in a memorandum of understanding among the New York State Department of Environmental Conservation, the New York State Department of Transportation and the Tri-State Regional Planning Commission. However, as noted in Subsection IV.B.2.b(2) of this notice, performance standards were not prepared in a manner conducive to monitoring.

In addition, two measures which lack appropriate endorsements by responsible agencies are the implementation of improved management techniques for the MTA and the stabilization of the transit fare. Although a commitment is made by the New York State Department of Transportation to assist in the implementation of the management techniques, and commitments are cited by the Governor of New York State and the Mayor of New York City to keep the present New York City transit fare at 50 cents, the MTA, the agency principally responsible for their implementation, is not identified in the BTN Plan as committing to implement these measures. In fact, as noted, the MTA has proposed to raise the fare.

Consequently, EPA finds that the proposed SIP revision does not contain adequate written evidence that appropriate governmental bodies will implement the plan's public transportation measures.

The need for a commitment to the enforcement of the public transportation measures, with the exception of enforcing laws preventing vandalism and other criminal activity, is generally not appropriate since no enforcement action is needed for their implementation. For example, rehabilitation of transit equipment is not dependent on enforcement.

C. Attainment Plan Requirements and EPA Review

1. The SIP revision must be adopted by the State only after adequate notice and public hearing. This is a requirement of Section 172(b)(1) of the Clean Air Act. The Attainment Plan was adopted by the Governor after public hearing were held, as follows:

Location and Date

Manhattan, January 29, 1979
Plainview, January 30, 1979
White Plains, January 31, 1979

The State has provided documentation to identify that the necessary notices, public hearings and adoptions were carried out in such a manner as to be found acceptable to EPA. Each public hearings was held after at least 30 days of notice.

2. The SIP revision must provide for the implementation of all reasonably available control measures as expeditiously as practicable. In response to this requirement of Section 172(b)(2) of the Clean Air Act a comprehensive program of transportation control measures was included in the State's Attainment Plan submittal. As noted earlier, in Section III.A. of this notice, the Attainment Plan includes all public transportation measures contained in the BTN Plan. With the exception of those measures concerned with public transportation improvements, the State's Attainment Plan was reviewed by EPA in its December 10, 1979 Federal Register notice (44 FR 70754) and conditionally approved on May 21, 1980 (45 FR 33981).

As discussed in Section III.C. of this notice, the public transportation improvement measures contained in the Attainment Plan for attainment and maintenance of standards, consist of four elements:

- Management of the transit system,
- Fare stabilization,
- Public transit rehabilitation, and
- Improvements and methods of promoting transit service.

The public transportation improvement measure was characterized by the State as a "reasonably available control measure." Such measures are defined in the Attainment Plan as those to which the State and local governments have given their full commitment to implement. However, in a May 21, 1980 submittal from the State, it is claimed that the commitment for public transit rehabilitation is simply a commitment to the level of funding cited in the Attainment Plan. No specific project commitments were made because the State believes that it is not possible to determine the difference in air quality impact of one rehabilitation project from another.

EPA does not accept this argument. Without a commitment to implement

specific projects, the Attainment Plan cannot meet the requirement to implement all reasonably available control measures.

The State indicates in its Attainment Plan that the procedure to select projects to implement the public transit rehabilitation program will be the transportation planning process conducted by the Tri-State Regional Planning Commission under Section 134 of Title 23, United States Code. This process has resulted in the development of a Transportation Improvement Program (TIP) which contains specific projects to implement the rehabilitation program. (These measures are identified in Addendum C to this notice.) Since this process has been completed and specific projects have been selected, consistent with the funding levels identified in the Attainment Plan, EPA believes that those transit rehabilitation projects should be considered as SIP commitments. These projects provide for the implementation of a reasonably available control measure. Also, since EPA recognizes that the TIP development process in ongoing, the State may change such projects through procedures provided for in the Attainment Plan.

3. The SIP shall provide for reasonable further progress in the period before attainment, including regular, consistent reductions sufficient to assure attainment by the required date. This requirement of section 172(b)(3) was reviewed by EPA in its December 10, 1979 (44 FR 70754) and May 21, 1980 (45 FR 33981) Federal Register notices. EPA found that the Attainment Plan adequately meets this requirement.

4. The SIP revision shall include an accurate, current inventory of emissions that have an impact on the nonattainment area, and provide for annual updates to indicate emissions growth and progress in reducing emissions from existing sources. This requirement of section 172(b)(4) was also reviewed by EPA in its December 10, 1979 and May 21, 1980 Federal Register notices. EPA found that the Attainment Plan does not adequately meet this requirement and promulgated a condition that, if met, would correct the plan in this regard. (40 CFR § 52.1684(f)(2)).

5. The SIP revision shall expressly quantify the emission growth allowance, if any, that will be allowed to result from new major sources or major modifications of existing sources, which may not be so large as to jeopardize reasonable further progress toward attainment by the required date. The SIP revision shall require preconstruction review permits for new major sources and major modifications of existing sources, to be issued in accordance with Section 173 of the Clean Air Act. These requirements of sections 172(b)(4) and (5) of the Clean Air Act were also reviewed by EPA in its December 10, 1979 and May 21, 1980 Federal Register notices. EPA found that the Attainment Plan does not adequately meet these requirements and promulgated three conditions that, if met, would correct the plan in this regard (40 CFR § 52.1674(d)(1), (2) and (3)).

6. The SIP revision shall provide identification and commitment of the necessary resources to carry out the provisions of Section 172. The availability of the funding required to implement the State's public transportation improvement measures must be reviewed under this requirement of section 172(b)(7) of the Clean Air Act. In its Attainment Plan the State identifies the amount of funds needed for a six-year period to implement capital projects for public transportation improvement. The sources of these funds are also identified. The State's budget is presented in Table 4. The funds needed to implement operational improvements and the sources of these funds are contained, in part, in the Attainment Plan and, to a greater extent in the BTN Plan.

The operating budget is discussed in section IV.B.4.b of this notice. However, it should be noted that the Attainment Plan commits to holding the transit fare at 50 cents. As discussed in section IV.B.4.b there are insufficient funds to meet this and other operational and managerial commitments.

In its review of the budget to implement the capital projects contained in the BTN Plan, as discussed in section IV.B.4.c of this notice, EPA found that insufficient funds were identified and committed to by the State. Since the cost of the capital projects contained in the Attainment Plan is even greater than that for the BTN Plan, and since no additional funds are identified in the Attainment Plan, EPA finds insufficient funds to meet Attainment Plan commitments.

Table 4.—*Six-Year (1978–1983) Attainment Plan Capital Budget*

[Dollars in millions per year]

Expenses	
Safe and reliable operations	335
Comfort	51
Environment and security	76
Total	462
Revenues:	
UMTA[1] grants	339
Matching funds:	
State	44
Port authority[2]	20
Local governments	20
Other	134
Total	557

[1] Urban Mass Transportation Administration.
[2] Port Authority of New York and New Jersey.

In its May 21, 1980 submittal, the State identifies the procedure it will use to determine the sufficiency of funds to implement public transportation improvement capital projects. The procedure applies to both the Attainment Plan and the BTN Plan and is as follows:

- It will be assumed that available federal funds will be lower than average during the early years of the six-year program; federal funds will increase during the term of the program consistent with the increase in their authorization levels.
- The total funds available in any given year must be no less than 90 percent of the annual amount committed to in the Attainment Plan, after adjusting for federal fund availability, as just discussed.
- The total funds available for the entire six-year program must be no less than 90 percent of the total amount committed to in the Attainment Plan.
- The total (six-year) funds made available to any specific element of the public transportation improvement measure must not be less than 90 percent of the total amount committed to in the Attainment Plan for that element.

EPA cannot accept this procedure for determining if adequate funds exist. First, the State has projected that UMTA grants to the metropolitan area will increase based on authorized increases to the national program. However, recent UMTA grant appropriations (as distinguished from authorizations) have not increased significantly and the amount of these funds awarded to the New York City metropolitan area has remained fairly constant. Although the State notes that increased State, local or other federal funds can be substituted for any shortfalls in UMTA funds, the State has not identified the source and amount of such contingency funds.

Second, the State contends that the requirements of this Section of the Clean Air Act will be met if at least 90 percent of its public transportation improvements can be funded. The Clean Air Act does not permit this discretion on the part of the State. The Attainment Plan must include sufficient funds to carry out the provisions of Section 172 (i.e., implement all reasonably available

control measures). A 10-percent shortfall in funding would indicate that sufficient capital funds were not identified or committed to.

7. The SIP revision shall contain schedules of compliance and such other measures as may be necessary to meet the requirements of Section 172: Schedules for the development and implementation of public transportation improvements are necessary to meet this requirement of Section 172(b)(8) of the Clean Air Act. Implementation schedules are contained for the most part in the area's Transportation Improvement Program. The State indicates in its Attainment Plan (and BTN Plan) that these are the schedules by which the public transportation improvements will be implemented. However, schedlues for implementation of better management techniques resulting from the "MTA Management Study" are not defined in the Attainment Plan. In spite of this deficiency, this requirement generally has been met.

8. The SIP shall evidence public, local government and state legislative involvement and consultation in accordance with Section 174, and include an identification and analysis of the air quality, health, welfare, economic, energy and social effects of the plan and include a summary of the public comment on such analysis. As stated its December 10, 1979 (44 FR 70754) and May 21, 1980 (45 FR 33981) Federal Register notices, EPA finds that the Attainment Plan generally meets this requirement of section 172(b)(9) of the Clean Air Act. However, the State's public and intergovernmental participation and consultation programs, summarized by EPA in its December 10, 1979 Federal Register notice, should be continued to further improve the consultation efforts. In addition, as specific projects are developed and studies undertaken with regard to transportation measures, additional analyses of the air quality, health, welfare, economic, energy and social effects of the plan provisions chosen should be prepared.

9. The SIP revision shall provide written evidence that the State and other governmental bodies have adopted the necessary requirements in legally enforceable form, and are committed to implement and enforce the appropriate elements of the SIP. As also discussed in EPA's December 10, 1979 and May 21, 1980 Federal Register notices, the Attainment Plan generally identifies the legal authority necessary to implement the transportation control measures it contains. In addition, the Attainment Plan states that the state and local governments have given their full commitment to implement those control measures categorized as "reasonably available." However, with the exception of resolutions enacted by the three New York City metropolitan area Transportation Coordinating Committees generally endorsing the hearing draft of the Attainment Plan, these commitments are not explicit. As noted in section IV.C.2 of this notice, the State itself makes no explicit commitments. As such, no written endorsements are provided in the Attainment Plan to support these commitments.

A general division of responsibility and commitments to provide for SIP development, implementation and enforcement, as required by Section 174 of the Clean Air Act, has been agreed to by the Tri-State Regional Planning Commission, the New York State Department of Transportation and the New York State Department of Environmental Conservation.

10. Additional Requirements for Ozone or Carbon Monoxide SIPs with Attainment Dates After 1982. The Clean Air Act mandates four specific requirements for SIPs demonstrating the need for an extension of the ozone or carbon monoxide ambient air quality standard attainment date beyond December 31, 1982. As noted in section II.B.3 of this notice, the Attainment Plan makes such a demonstration for the New York City metropolitan area. The first three requirements to be discussed are mandated by section 172(b)(11) of Part D of the Clean Air Act; the fourth is made a Part D requirement by sections 110(a)(3)(D) and 110(c)(5)(C) of the Act.

a. Inclusion of a program that requires, before issuance of a preconstruction review permit, an analysis of alternative sites, sizes, production processes, and control techniques which demonstrates that the benefits of the proposed source significantly outweigh any environmental and social costs: New York State has provided EPA with a policy statement indicating that all major sources of volatile organic compound emissions will be subject to a complete "environmental impact statement" review, pursuant to the State Environmental Quality Review Act (SEQRA). EPA's review indicates that the provisions of this act provide for all the required preconstruction analyses.

It should be noted that the State does not address this requirement for major sources of carbon monoxide. Since few such sources locate in central business districts where violations of the carbon monoxide standard are a problem, EPA does not believe this requirement to be applicable to these sources. On this basis, EPA finds that the Attainment Plan adequately meets this requirement.

b. The establishment of a specific schedule for implementation of a vehicle emission inspection and maintenance program: As discussed in EPA's December 10, 1979 (44 FR 70754) and May 21, 1980 (45 FR 33981) Federal Register notices, the Attainment Plan proposes establishment of the required emission inspection and maintenance program and includes the required schedule. For this reason, EPA approved the Attainment Plan with regard to its ability to meet this Clean Air Act requirement.

c. Inclusion of a program for selecting a package of transportation control measures (and any other necessary measures) to attain the emission reduction targets in the SIP: The Attainment Plan contains a program for selecting a package of transportation control measures which is expected to provide for the attainment of the emission reduction targets assigned to these measures through 1982. However, as discussed in EPA's December 10, 1979 Federal Register notice, deficiencies were found in the program. Consequently, in its May 21, 1980 Federal Register notice, EPA conditionally approved this element of the SIP.

d. The proposed SIP revision must include comprehensive measures to establish, expand or improve public transportation to meet basis transportation needs as expeditiously as practicable, including a commitment to use necessary federal grants and state and local funds: Section IV.B of this notice contains EPA's review of the adequacy of the State's plan to meet this requirement.

D. Summary of EPA's Proposed Action

EPA is today proposing disapproval of the public transportation improvement element of the State of New York's Attainment Plan for carbon monoxide and ozone in the New York City metropolitan area and its public transportation improvement (BTN) plan to meet the basic transportation needs of the New York City metropolitan area. This action is being taken because of the Many inadequacies found by EPA, which may be summarized as follows:

1. BTN Plan.

- The BTN Plan does not include comprehensive measures to establish, expand, or improve public transportation to meet basic transportation needs.
- The BTN Plan does not identify and commit the financial and manpower

resources necessary to carry out the plan including the requirement to use all necessary federal grants, state or local funds, or any legal combination of such grants and funds.

- The BTN Plan does not evidence public, local government, and state legislative involvement and consulation in accordance with Section 174.
- The BTN Plan does not contain adequate written notice that the state, local government or designated regional agencies are committed to implement and enforce the plan.

2. Attainment Plan.

- The Attainment Plan does not identify and commit the financial and manpower resources necessary to carry out the plan's provisions.
- The Attainment Plan does not include the comprehensive measures and requirements referred to in section 110(c)(5)(B) of the Clean Air Act.

V. Consequences of EPA's Proposed Actions

A. Findings Regarding Part D

EPA is required to make a finding as to whether or not the New York State Implementation Plan revision for the New York City metropolitan area meets the requirements of Part D of the Clean Air Act. As discussed in Section II.B. of this notice both the State Attainment Plan and BTN Plan submittals must be judged in this context.

In an action taken in the May 21, 1980 Federal Register (45 FR 33981) EPA has already found that those parts of the Attainment Plan not related to public transportation do in fact conditionally meet the requirements of Part D. However, for the reasons summarized in section IV.D of this notice, EPA is proposing to find that the remainder of the Attainment Plan and the BTN Plan fail in this regard. If, after public comment, the public transportation improvement element of the New York State carbon monoxide and ozone Attainment Plan and the BTN Plan are disapproved by EPA, several consequences result. These are discussed in the remainder of this section along with certain actions the State may choose to take so that EPA may exercise its discretionary authority to mitigate their effects.

B. New Source Growth

Because there will not be an approved new York City metropolitan area SIP for carbon monoxide and ozone that meets all of the requirements of Part D of the Clean Air Act, the moratorium on construction or modification of major stationary sources of these two pollutants will remain in place in the New York City metropolitan area. This nondiscretionary meratorium is provided for in section 110(a)(2)(I) of the Clean Air Act and in 40 CFR 52.24.

C. Funding Limitations

Section 176(a) of the Clean Air Act requires that project approvals and grants authorized by the Clean Air Act and Title 23, United States Code (relating in part to the federal funding of transportation projects) must be withheld from air quality control regions where transportation control measures are necessary to attain national ambent air quality standards if the Administrator of EPA finds, after July 1, 1979, that a Governor has not submitted a plan which considers each of the elements required by section 172 of the clean Air Act or is not making reasonable efforts to do so. The only exception to this federal assistance limitation is that safety, mass transit and transportation improvement projects related to air quality attainment and maintenance may be approved and funded. Policy and procedures for apply the provisions of section 176(a) were published in the April 10, 1980 Federal Register (45 FR 24692). In essence, if the State's SIP revision is disapproved as proposed, a decision to initiate these funding limitations will be based on whether or not the State is making reasonable efforts to submit a SIP which considers each elements of section 172 of the Clean Air Act.

Under Section 316 of the Clean Air Act EPA may withhold or restrict funding for the construction of sewage treatment facilities if the State does not have an approved SIP in effect. Furthermore, under the provisions of Section 316, this decision with regard to the New York City metropolitan area must be based on a determination that a particular facility will result directly or indirectly in additional carbon monoxide or organic compound emissions.

D. Mitigating Measures Which the State May Undertake

As discussed, if the SIP is disapproved, EPA will have to consider, for the purpose of deciding whether to initiate the funding limitations called for in Section 176(a) of the Clean Air Act, whether the State is making reasonable efforts to submit an approvable SIP revision. Consequently, meaningful efforts by the State to correct the Attainment and BTN Plan deficiencies found by EPA (as described in Section IV of this notice) will enter into this decision. Furthermore, evidence that the State is actually implementing on schedule those provisions of the Attainment Plan found approvable by EPA in its May 21, 1980 Federal Register action (45 FR 33981) and evidence that the conditions promulgated through this action are being met on time will similarly enter into this decision.

VI. Public Comment

Interested persons are invited to comment on any element of the subject revision and on whether or not the proposed New York State Implementation Plan revision meets Clean Air Act requirements. Comments received on or before August 29, 1980 will be considered in EPA's final decision. All comments received will be available for inspection at the Region II office of EPA at 26 Federal Plaza, Room 908, New York, New York 10278.

EPA particularly invites comments from the MTA and the Tri-State Regional Planning Commission on the following issues: the adequacy of the State's definition of basic transportation needs and the funding levels required to meet such needs.

Under Executive Order 12044, EPA is required to judge whether a regulation is "significant" and therefore subject to the procedural requirements of the Order or whether it may follow other specialized development procedures. I have reviewed this package and determined that it is a specialized regulation not subject to the procedural requirements of Executive Order 12044.

This notice of proposed rulemaking is issued under the authority of Sections 110, 172 and 301 of the Clean Air Act, as amended, to advise the public that comments may be submitted on whether the proposed revision to the New York State Implementation Plan should be approved or disapproved.

(Secs. 110, 172 and 301 of the Clean Air Act, as amended (42 U.S.C. 7410, 7502, and 7601))

Dated: June 25, 1980.

Charles S. Warren,

Regional Administrator, Environmental Protection Agency.

Addendum A

June 20, 1978 letter from Administrator Costle to Governor Carey.

Environmental Protection Agency

Honorable Hugh L. Carey,
Governor of New York, Albany, New York 12224.

Dear Governor: On December 5, 1977, by notice in the Federal Register, the bridge toll requirement was removed from New York City's Transportation Control Plan. The removal of this strategy resulted from your letter of application dated October 19, 1977, which included a certification that you would revise the New York City Metropolitan Area Transportation Control Plan of the New York

State Implementation Plan (SIP) by August 7, 1978, to include measures required by section 110(c)(5)(B) of the Clean Air Act, as amended. This letter provides you with further guidance concerning the criteria that will be used to evaluate the adequacy of the plan and the minimum elements which should be included in the plan revision in order for it to be approved by the Environmental Protection Agency (EPA).

As you know, section 110(c)(5)(B) requires that if a bridge toll strategy has been deleted from a SIP, then a plan must be developed and submitted to EPA, including comprehensive measures (including the written evidence required by Part D of the Act) to establish, expand or improve public transportation to meet basic transportation needs as expeditiously as practicable, and implement transportation control measures necessary to attain and maintain air quality standards. The plan must also include a requirement that all available federal, state and local funds will be used, insofar as is necessary and consistent with the terms of authorizing legislation, to implement these measures.

While the plan submitted must satisfy the requirements in section 110(c)(5)(B), you should also be aware that one of the purposes of the August 1978 plan revision is to provide substitute measures for the elimination of the bridge tolls. Thus, the plan must provide for emissions reductions and mass transit benefits which are, at least, equivalent to the reductions and benefits which were originally expected to result from implementation of the bridge toll strategy.

In determining the type of transit service improvements which will be implemented, the requirement of providing for "basic transportation needs" must be considered. The concept of basic transportation needs arose from local concerns that implementation of transportation controls restricting the use of private automobiles in congested areas would be infeasible so long as the mass transit system was not sufficient to meet the public transportation needs. In order to increase the feasibility of implementing transportation controls in areas which had not attained air quality standards, improving and expanding public transportation service seemed warranted. Accordingly, the concept of "basic transportation needs" incorporated the idea that public transportation be improved to the point where its inadequacy would not be a factor in implementing policies designed to induce shifts from private to public transportation.

In satisfying the requirement that "basic transportation needs" be met, the transit system characteristics that might affect the feasibility of diverting large numbers of automobile users to transit should be identified and evaluated. The relevant factors include the number of transit vehicles required, the geographical area served by the transit system, the relative travel times of transit and automobile trips, the relative costs of transit and automobile service, and the mode split that the transit system must achieve in order to reduce vehicle miles travelled and attain and maintain air quality standards.

Therefore, "basic transportation needs" encompasses more than mere physical capacity to provide transit service to a certain number of people. The concept also includes a need to make public transportation a viable and attractive alternative to use of the private automobile for all potential users. The public transportation strategy should consider the specialized needs of various users (elderly, handicapped, students, etc.) and develop measures for meeting those needs through providing both conventional mass transit (buses, rapid and light rail) and paratransit (shared ride services, dial-a-ride, etc.) services. In addition, the transit strategy developed should result in travel time and costs that are comparable to the use of the private automobile. Finally, passenger amenities to make the transit alternative attractive, convenient and comfortable must be included in the strategy, along with an effective marketing program aimed at publicizing the availability and benefits of transit ridership. The strategy developed should meet basic transportation needs by expanding or improving existing services and encouraging transit ridership.

Therefore, in order to satisfy the requirements in section 110(c)(5) outlined above, the plan submitted by August 7, 1978, should, at a minimum, include the following elements:

(1) Certification (including all documentation supporting such certification) that a full examination of basic transportation needs has been completed and that with upgrading, expansion or improvements specified pursuant to subparagraph (2) below, the area's transportation system would meet basic transportation needs. This certification, to the extent it finds an improved public transit system adequate to meet basic transportation needs, means that lack of adequate transit could not be advanced as a reason to postpone implementation of such retraints on auto usage as may be necessary to attain and maintain air quality standards.

(2) Identification of those measures which will be undertaken with respect to the transportation system, including, capital facilities, operating procedures, rate structure and/or marketing to meet basic transportation needs in accordance with subparagraph (1) above. The extent and type of service improvements should at least be equivalent to service improvements that would have been possible through use of the toll revenues collected.

(3) A compliance schedule containing increments of progress pursuant to which measures identified in subparagraph (2) will be implemented. This construction and improvement schedule should be designed to achieve full implementation of each such measure as expeditiously as practicable, but no later than December 31, 1982, unless the requisite showing is made under section 172(a)(2), then no later than December 31, 1987.

(4) A compliance schedule, including increments of progress and the written evidence required by section 172 of the Act, for expeditiously implementing transportation control measures which will achieve emissions reductions equivalent to the reductions that were expected to result from the use of the bridge tolls eliminated.

(5) Presentation of a program for evaluating, adopting and implementing a range of alternative transportation options, which will be necessary to attain and maintain standards by December 31, 1982, or if the requisite showing under section 172(a)(2) is made, by December 31, 1987. The range of alternatives to be evaluated should include, as a minimum, those measures listed in section 108(f)(1)(a) of the Act.

(6) A review of all federal, state and local revenue sources to determine which funds may, consistent with the terms of their legislation, be applied to mass transit or transportation control purposes.

(7) A five-year projection of the regional or municipal transportation authority's annual capital and operating expenses (including those incurred in connection with subparagraphs (2), (3), (4) and (5) above). Identify anticipated revenues sources which will be used to satisfy these expenses. If at the end of a five-year period national ambient air quality standards for mobile source-related pollutants have not yet been attained, an additional projection of annual capital and operating expenses, with an identification of anticipated revenues sources which will be used to satisfy those expenses, must be prepared to cover the period until December 31, 1987.

The elements listed above will be used by EPA in evaluating the adequacy of the August 7, 1978, SIP revision submittal.

The plan revision requirement in section 110(c)(5) supplements—but does not replace—the requirement that states with nonattainment areas submit comprehensive SIP revisions by January 1, 1979. The January SIP revision must satisfy the requirements in section 172, as provided in my February 24, 1978, memorandum concerning "Criteria for Approval of 1979 SIP Revisions."

I hope that this guidance will be helpful to you in preparing adequate public transportation and transportation control strategies to substitute for the elimination of the bridge tolls and satisfy the other requirements in section 110(c)(5)(B). If you have any questions concerning this guidance, please do not hesitate to contact the EPA Regional Office in New York City.

Sincerely yours,

Barbara Blum,

Acting.

Douglas M. Costle.

Addendum B.—Projects and Studies Contained in the New York State Basic Transportation Needs Plan

I. Projects to Improve Safety and Reliability

A. Subways

- Correction of serious structual problems.
- Track and tie replacement programs using both capital and maintenance funds.
- Upgrading of IRT contact rail.
- Switch improvements at priority locations.
- Ventilation equipment upgrading in long tunnels.
- Water line replacement.
- Tunnel lighting and pump replacements.

- Completion of signal modernization on the IRT system and continuation of modernization on other systems.
- Communication equipment replacement.
- Power equipment replacement.
- Continuation of emergency power equipment program.
- Replacement of car equipment: door opening mechanisms, traction fault detectors, brake warning systems.
- Acceleration of yard and shop improvement programs: preservice inspection and cleaning facilities; conversion to all-weather car washing facilities.
- Improvements to service vehicles.
- Replacement and retrofit of cars.

B. Communter Rail
- New and improved maintenance facilities for the Long Island Railroad.
- Improvements to the Conrail Upper Harlem Line.
- Track and signal improvements.
- Improved management practices.

C. Buses
- Purchase of additional New York City buses.
- Construction of at least two maintenance and storage facilities.
- Major increase in structural rehabilitation and modernized equipment at many locations.
- Depot security program to reduce vandalism.
- Replacement of suburban buses and garages.
- Improved management practices.

D. Staten Island
- Rehabilitation of ferry terminals, equipment, and repair facilities.
- Staten Island Rapid Transit power substation upgrading.

II. Projects to Improve Comfort
- Air conditioning of entire subway fleet (older cars only when economically justifiable).
- Air-conditioning retrofit of 400 to 500 subway cars each year.
- Continuation of the existing noise reduction program.
- Continuation of the policy of purchasing air-conditioned buses.
- Improved maintenance for air conditioners and heating systems on commuter railroads.

III. Projects to Improve Environment and Security (New York City Transit Authority System only)
- Continuation of program of cleaning and minor repairs.
- Doubling of existing rehabilitation efforts; turnstiles, lighting, platforms, ceilings, canopies.
- Upgrading of signs and lighting.
- Closed-circuit television at some subway stations.
- Upgrading of public address system.
- Abrasive warining strips installed at all subway stations.

IV. Projects to Improve Availability & Convenience of Service
- Adjustment of routes as necessary.
- Suburban local bus route extension.
- Selected park-and-ride lot expansion.

V. Studies Contained in the BTN Plan
- MTA Management Study.
- Study of transit alternatives in Queens.
- New York City subway sufficiency study.
- Conrail/Long Island Railroad service improvement studies.
- Express bus study.
- Noise reduction studies.
- Review of crime prevention equipment.
- New York City bus route studies.
- Bus and rail service coordination studies.
- Identification of additional park-and-ride lot locations.
- Elderly and handicapped program requirements for all systems.

Addendum C—Projects and Studies Contained in the New York State Attainment Plan

I. Management Improvements
- Establishment of a separate position of Executive Director.
- Development of a plan to streamline the New York City Transit Authroity capital project approval process.
- Implementation of the recommendations of the MTA Management Study.

II. Fare Stabilization
- Maintenance of the present fare through 1981.
- After 1981, fare levels which increase slower than the cost of living.

III. Public Transit Rehabilitation
- Air condition all 1360 IRT cars (retrofit) by 1982.
- Air conditioning retrofit 400 to 500 BMT/IND cars per year starting in 1979.
- 14 stations per year modernized: walls, floors, signs, lighting, abrasive strips, layout changes; upgrading of 84 other stations.
- New escalators at 45 locations.
- Demonstration program of closed-circuit television.
- Extension of security program.
- Extension and expansion of noise program for three years.
- New signal system on Long Island Railroad approach to Penn Station.
- Improvements to commuter rail stations; escalators, platforms, signs, lighting, shelters at 70 stations.
- Improvements to the Conrail Harlem Line.
- New Long Island Railroad car maintenance facility.
- Other new LIRR and Conrail maintenance facilities.
- Purchase of new M-1 cars.
- Replacement of overage buses with air-conditioned buses.
- Purchase of minibuses for specialized services.
- Construction of new bus maintenance and service facilities.
- Rehabilitation of existing bus maintenance and service facilities.
- Bus shelters.
- Improvements to the Staten Island Ferry terminal.
- High-speed water transportation demonstration.
- Improved stations, electrical power stations for Staten Island Rapid Transit.
- Express service to JFK.

IV. Improvements to Mass Transit Service; Promotion of Mass Transit Service
- Increased peak period subway service.
- Additional studies to reduce subway crowding.
- Studies of subway routing service.
- JFK airport express service.
- Commuter rail service improvement studies.
- Transit alternatives study for eastern Rockland County.
- New York City bus routing studies.
- Suburban bus studies.
- Publication of timetables and route maps.
- Marketing programs.
- Establishment of reciprocal fare agreements between operators.
- Initiation of the advance payment of fares.

Addendum D

Performance Standards Contained in the New York State Basic Transportation Needs Plan.

1. Fare Stability

The BTN Plan defines this measure as: ". . . fare stability related to the cost of living over the long term, that is, increasing at a rate no greater than the cost of living." This standard is reflective of passenger concerns and is readily measureable.

2. Operational Safety and Reliability

The safety standard is defined by the State as an accident rate which is no greater than that of the private automobile and not substantially greater than that of comparable transit systems elsewhere in the country. The reliability standard is defined as 90 percent average daily reliability, pending further research.

The performance standard for safety is lenient in that it does not provide for the continuation of the current level of safety characteristic of the area's public transportation system. The safety records of the private automobile and most transit systems in other areas are substantially worse than that of the New York City metropolitan area's public transportation system. Therefore, the State's standard could allow the safety of the area's system to be degraded.

The reliability standard is not as specific as that used elsewhere in the industry. For example, it does not distinguish between the differing schedule adherence capabilities of rail and bus transportation. Also, it is not sensitive to rider needs on different routes and at different times of day.

3. Comfort

This standard is related to three characteristics of the public transportation system: crowding, air conditioning, and noise levels. For subways the standard for crowding is defined as four square feet per passenger for each subway line in the peak period; on commuter rail lines it is tentatively set at a range of 8.2 to 7.0 square feet; and for buses no standard is set. Air conditioning and heating for all vehicles also are defined as a basic transportation need. No noise standard is set; however, the State commits to study the situation and to consider in its standard factors such as minimizing the potential for damage to hearing and reducing the interference with normal conversation.

The performance standards proposed for crowding are less stringent than standards used by other transit operators, state transportation departments or metropolitan planning organizations. For example, the standard for crowding of four square feet per passenger is at the low end of the "reasonably accepted" level for crowding conditions as put forth by the New York City Department of City Planning. The Tri-State Regional Planning Commission and the Pennsylvania Department of Transportation also have suggested higher standards. The Regional Planning Association states in the "Region's Agenda" (1978), "The service quality provided in this Region is far below the standards in the rest of the nation. Despite declines in patronage, New York subways remain overcrowded." In addition, the standard proposed by the State is not sensitive to the length of the trip.

The standard for heating and air conditioning is capable of adequately defining comfort level. A comfort standard for subway stations and bus stops would also have been desirable.

Noise is a severe problem in the New York City metropolitan area's public transportation system, which should be covered by a performance standard.

4. Environment and Security

The standard for this indicator is defined as stations which are secure from crime and vandalism, brightly lit, supplied with easy to understand signs, kept in good repair, and kept clean of litter, dirt, and foul odors.

This standard, while establishing an apparent goal for station environment and security, lacks specificity. (For example, the term "brightly lit" could have been defined in terms of a minimum lighting intensity.) Also, the standard concerns only subway stations. There is no mention of subway cars, buses or commuter rail facilities.

5. Availability and Convenience of Service

This standard is defined as a system which serves "90 percent of the population in the dense portion of the urban area with an arrangement of routes that is convenient for travel desires and about which information is both comprehensible and available. It must assure that the special mobility needs of elderly and handicapped people are met at reasonable cost."

The performance standard for availability and convenience of service is vague and unquantifiable. For example, the term "dense portion" is never defined. No indication is made as to the accessibility of transit to employment, commercial, and recreational opportunities in the area. Performance standards for convenience are not provided.

Addendum E

New York State Assessment of the Existing Public Transportation System's Ability to Meet Performance Standards.

1. Fare Stability

The State notes in its BTN Plan that the performance standard for this indicator is being met.

2. Operational Safety and Reliability

The State claims that its standard for reliability is being met for MTA subway and bus lines, but not for the MTA commuter rail system. It is also claimed that the operational safety standard is being met throughout the public transportation system.

3. Comfort

The State in its BTN Plan notes that the performance standards for crowding are not currently being met. In addition, the air conditioning standard is not currently being met. No discussion is provided as to the degree to which the heating standard is being met. Since there is no noise standard, this element of comfort was not assessed by the State.

4. Environment and Security

The State notes in its BTN Plan that the performance standard for station cleaning, rehabilitation and lighting is not currently being met. No indication is given as to whether or not the standard for security is being met.

5. Availability and Convenience of Service

The State claims in its BTN Plan that the performance standard for availability is currently being met. The performance standard for convenience, especially with regard to bus routes, currently is not being met.

[FR Doc. 80-19721 Filed 6-27-80; 8:45 am]
BILLING CODE 6560-01-M

FEDERAL COMMUNICATIONS COMMISSION

47 CFR Part 73

[BC Docket No. 80-318; RM-3549]

FM Broadcast Station in Greenville, Ill.; Proposed Changes in Table of Assignments

AGENCY: Federal Communications Commission.

ACTION: Notice of proposed rule making.

SUMMARY: Action taken herein proposes the assignment of a Class A FM channel to Greenville, Illinois, in response to a petition filed by Charles N. Cutler. The proposed channel could provide a first local commercial broadcast service to Greenville.

DATES: Comments must be filed on or before August 18, 1980, and reply comments must be filed on or before September 8, 1980.

ADDRESS: Federal Communications Commission, Washington, D.C. 20554.

FOR FURTHER INFORMATION CONTACT: Montrose H. Tyree, Broadcast Bureau, (202) 632-9660.

SUPPLEMENTARY INFORMATION:

In the matter of amendment of § 73.202(b), *Table of Assignments*, FM Broadcast Stations. (Greenville, Illinois), BC Docket No. 80-318, RM-3549.

Adopted: June 18, 1980.

Released: June 26, 1980.

1. *Petitioner, Proposal, Comments.* (a) A petition for rule making [1] was filed by Charles N. Cutler ("petitioner"), proposing the assignment of Channel 269A to Greenville, Illinois, as that community's first FM assignment.

(b) The channel can be assigned to Greenville, provided the transmitter site is located approximately 12 kilometers (7.8 miles) southeast of Greenville.

(c) Petitioner states he will apply for the channel, if assigned.

2. *Community Data*—(a) *Location.* Greenville, in Bond County, is located approximately 80 kilometers (50 miles) east of St. Louis, Missouri.

(b) *Population.* Greenville—4,632; [2] Bond County—14,012.

(c) *Local Aural Broadcast Service.* Greenville has no local commercial service. However, it is served locally by Class D noncommercial educational FM Station WGRN-FM.

3. Petitioner states that Greenville had a 1.4 percent population increase between 1960-1970.

4. In view of the fact that the proposed FM channel assignment would provide for a first local commercial broadcast service in Greenville, the Commission believes it appropriate to propose amending the FM Table of Assignments, § 73.202(b) of the Commission's rules, with regard to Greenville, Illinois, as follows:

City	Channel No.	
	Present	Proposed
Greenville, Illinois		269A

5. The Commission's authority to institute rulemaking proceedings, showings required, cut-off procedures, and filing requirements are contained in the attached Appendix below and are incorporated by reference herein.

Note.—A showing of continuing interest is required by paragraph 2 of the Appendix before a channel will be assigned.

6. Interested parties may file comments on or before August 18, 1980, and reply comments on or before September 8, 1980.

7. For further information concerning this proceeding, contact Montrose H. Tyree, Broadcast Bureau, (202) 632-9660. However, members of the public should

[1] Public Notice of the petition was given on February 1, 1980, Report No. 1211.

[2] Population figures are taken from the 1970 U.S. Census.

note that from the time a notice of proposed rule making is issued until the matter is no longer subject to Commission consideration or court review, all *ex parte* contacts are prohibited in Commission proceedings, such as this one, which involve channel assignments. An *ex parte* contact is a message (spoken or written) concerning the merits of a pending rulemaking other than comments officially filed at the Commission or oral presentation required by the Commission.

Federal Communications Commission.

Henry L. Baumann,

Chief, Policy and Rules Division, Broadcast Bureau.

Appendix

[BC Docket No. 80-318 RM-3549]

1. Pursuant to authority found in Sections 4(i), 5(d)(1), 303 (g) and (r), and 307(b) of the Communications Act of 1934, as amended, and § 0.281(b)(6) of the Commission's rules, it is proposed to amend the FM Table of Assignments, § 73.202(b) of the Commission's rules and regulations, as set forth in the *Notice of Proposed Rule Making* to which this Appendix is attached.

2. *Showings required.* Comments are invited on the proposal(s) discussed in the Notice of Proposed Rule Making to which this Appendix is attached. Proponent(s) will be expected to answer whatever questions are presented in initial comments. The proponent of a proposed assignment is also expected to file comments even if it only resubmits or incorporates by reference its former pleadings. It should also restate its present intention to apply for the channel if it is assigned, and, if authorized, to build the station promptly. Failure to file may lead to denial of the request.

3. *Cut-off procedures.* The following procedures will govern the consideration of filings in this proceeding.

(a) Counterproposals advanced in this proceeding itself will be considered, if advanced in initial comments, so that parties may comment on them in reply comments. They will not be considered if advanced in reply comments. (See § 1.420(d) of Commission rules.)

(b) With respect to petitions for rule making which conflict with the proposal(s) in this Notice, they will be considered as comments in the proceeding, and Public Notice to this effect will be given as long as they are filed before the date for filing initial comments herein. If they are filed later than that, they will not be considered in connection with the decision in this docket.

4. *Comments and reply comments; service.* Pursuant to applicable procedures set out in §§ 1.415 and 1.420 of the Commission's rules and regulations, interested parties may file comments and reply comments on or before the dates set forth in the *Notice of Proposed Rule Making* to which this Appendix is attached. All submissions by parties to this proceeding or persons acting on behalf of such parties must be made in written comments, reply comments, or other appropriate pleadings. Comments shall be served on the petitioner by the person filing the comments. Reply comments shall be served on the person(s) who filed comments to which the reply is directed. Such comments and reply comments shall be accompanied by a certificate of service. (See § 1.420 (a), (b) and (c) of the Commission rules.)

5. *Number of copies.* In accordance with the provisions of § 1.420 of the Commission's rules and regulations, an original and four copies of all comments, reply comments, pleadings, briefs, or other documents shall be furnished the Commission.

6. *Public inspection of filings.* All filings made in this proceeding will be available for examination by interested parties during regular business hours in the Commission's Public Reference Room at its headquarters, 1919 M Street NW., Washington, D.C.

[FR Doc. 80-19592 Filed 6-27-80; 8:45 am]

BILLING CODE 6712-01-M

---

47 CFR Part 73

[BC Docket No. 80-317; RM-3542]

FM Broadcast Station in Piedmont, Mo.; Proposed Changes in Table of Assignments

AGENCY: Federal Communications Commission.

ACTION: Notice of proposed rule making.

SUMMARY: Action taken herein proposes the assignment of a Class A FM channel to Piedmont, Missouri, in response to a petition filed by Wayne County Broadcasting Co., Inc. The proposed channel could provide a first fulltime local aural broadcast service to Piedmont.

DATES: Comments must be filed on or before August 18, 1980, and reply comments must be filed on or before September 8, 1980.

ADDRESSES: Federal Communications Commission, Washington, D.C. 20554.

FOR FURTHER INFORMATION CONTACT: Montrose H. Tyree, Broadcast Bureau, (202) 632-9660.

SUPPLEMENTARY INFORMATION: In the matter of amendment of § 73.202(b), *Table of Assignments,* FM Broadcast Stations. (Piedmont, Missouri), BC Docket No. 80-317, RM-3542.

Adopted: June 18, 1980.
Released: June 26, 1980.

1. *Petitioner, Proposal, Comments.* (a) A petition for rule making [1] was filed by Wayne County Broadcasting Co., Inc. ("petitioner"), proposing the assignment of Channel 285A to Piedmont, Missouri, as that community's first FM assignment.[2]

(b) The channel can be assigned to Piedmont in compliance with the minimum distance separation requirements.

(c) Petitioner states it will apply for the channel, if assigned.

2. *Community Data*—(a) *Location.* Piedmont, in Wayne County is located approximately 175 kilometers (108 miles) south of St. Louis, Missouri.

(b) *Population.* Piedmont—1,906 [3]; Wayne County—8,546.

(c) *Local Aural Broadcast Service.* Piedmont is served locally by daytime-only AM Station KPWB, licensed to petitioner.

3. Petitioner states that because of the large number of visitors which come to the Piedmont area, a first nighttime aural service is needed. The proposal would also provide the residents of Piedmont an opportunity to receive sporting events at night.

4. In view of the fact that the proposed FM channel assignment would provide for a first fulltime local aural broadcast service in Piedmont, the Commission believes it appropriate to propose amending the FM Table of Assignments, § 73.202(b) of the Commission's rules, with regard to Piedmont, Missouri, as follows:

City	Channel No.	
	Present	Proposed
Piedmont, Missouri		285A

5. The Commission's authority to institute rule making proceedings, showings required, cut-off procedures, and filing requirements are contained in the attached Appendix and are incorporated by reference herein.

Note.—A showing of continuing interest is required by paragraph 2 of the Appendix before a channel will be assigned.

6. Interested parties may file comments on or before August 18, 1980, and reply comments on or before September 8, 1980.

7. For further information concerning this proceeding, contact Montrose H. Tyree, Broadcast Bureau, (202) 632-9660. However, members of the public should note that from the time a notice of proposed rule making is issued until the matter is no longer subject to Commission consideration or court

---

[1] Public Notice of the petition was given on February 1, 1980, Report No. 1211.

[2] Petitioner had requested the assignment of FM Channel 244A. However, that channel was recently assigned to Poplar Bluff, Missouri, in Dkt. 78-188. Therefore, we have substituted Channel 285A for Piedmont.

[3] Population figures are taken from the 1970 U.S. Census.

review, all *ex parte* contacts are prohibited in Commission proceedings, such as this one, which involve channel assignments. An *ex parte* contact is a message (spoken or written) concerning the merits of a pending rule making other than comments officially filed at the Commission or oral presentation required by the Commission.

Federal Communications Commission.

Henry L. Baumann,

Chief, Policy and Rules Division Broadcast Bureau.

Appendix

[BC Docket No. 80-317 RM-3542]

1. Pursuant to authority found in Sections 4(i), 5(d)(1), 303(g) and (r), and 307(b) of the Communications Act of 1934, as amended, and §0.281(b)(6) of the Commission's rules, it is proposed to amend the FM Table of Assignments, Section 73.202(b) of the Commission's rules and regulations, as set forth in the *Notice of Proposed Rule Making* to which this Appendix is attached.

2. *Showings required.* Comments are invited on the proposal(s) discussed in the Notice of Proposed Rule Making to which this Appendix is attached. Proponent(s) will be expected to answer whatever questions are presented in initial comments. The proponent of a proposed assignment is also expected to file comments even if it only resubmits or incorporates by reference its former pleadings. It should also restate its present intention to apply for the channel if it is assigned, and, if authorized, to build the station promptly. Failure to file may lead to denial of the request.

3. *Cut-off procedures.* The following procedures will govern the consideration of filings in this proceeding.

(a) Counterproposals advanced in this proceeding itself will be considered, if advanced in initial comments, so that parties may comment on them in reply comments. They will not be considered if advanced in reply comments. (See §1.420(d) of Commission Rules.)

(b) With respect to petitions for rule making which conflict with the proposal(s) in this Notice, they will be considered as comments in the proceeding, and Public Notice to this effect will be given as long as they are filed before the date for filing initial comments herein. If they are filed later than that, they will not be considered in connection with the decision in this docket.

4. *Comments and reply comments; service.* Pursuant to applicable procedures set out in §§ 1.415 and 1.420 of the Commission's rules and regulations, interested parties may file comments and reply comments on or before the dates set forth in the *Notice of Proposed Rule Making* to which this Appendix is attached. All submissions by parties to this proceeding or persons acting on behalf of such parties must be made in written comments, reply comments, or other appropriate pleadings. Comments shall be served on the petitioner by the person filing the comments. Reply comments shall be served on the person(s) who filed comments to which the reply is directed. Such comments and reply comments shall be accompanied by a certificate of service. (See § 1.420(a), (b) and (c) of the Commission rules.)

5. *Number of copies.* In accordance with the provisions of § 1.420 of the Commission's rules and regulations, an original and four copies of all comments, reply comments, pleadings, briefs, or other documents shall be furnished the Commission.

Public inspection of filings. All filings made in this proceeding will be available for examination by interested parties during regular business hours in the Commission's Public Reference Room at its headquarters, 1919 M Street, NW, Washington, D.C.

[FR Doc. 80-19593 Filed 6-27-80; 8:45 am]

BILLING CODE 6712-01-M

---

47 CFR Part 73

[BC Docket No. 80-285; RM-3511]

FM Broadcast Station in Yakima, Wash.; Proposed Changes in Table of Assignments

AGENCY: Federal Communications Commission.

ACTION: Notice of proposed rule making.

SUMMARY: Action taken herein proposes the assignment of a fifth commercial FM channel to Yakima, Washington, in response to a petition filed by Thomas W. Read d.b.a. Read Broadcasting. The proposed channel could provide for an additional broadcast voice to the city of Yakima.

DATES: Comments must be filed on or before August 18, 1980, and reply comments must be filed on or before September 8, 1980.

ADDRESSES: Federal Communications Commission, Washington, D.C. 20554.

FOR FURTHER INFORMATION CONTACT: Mildred B. Nesterak, Broadcast Bureau, (202) 632-7792.

SUPPLEMENTARY INFORMATION: In the matter of amendment of § 73.202(b), Table of Assignments, FM Broadcast Stations. (Yakima, Washington), BC Docket No. 80-285, RM-3511.

Adopted: June 18, 1980.

Released: June 25, 1980.

1. *Petitioner, Proposal, Comments.* (a) A petition for rule making [1] was filed by Thomas W. Read d.b.a. Read Broadcasting ("petitioner"), proposing the assignment of Channel 257A to Yakima, Washington, as that community's fifth commercial FM channel. Petitioner filed comments reaffirming his intent to apply for the channel, if assigned.

(b) The channel can be assigned in conformity with the minimum distance separation requirements, provided the transmitter site is located approximately 8.5 kilometers (5.3 miles) southeast of Yakima.

2. *Community Data*—(a) *Location.* Yakima, seat of Yakima County, is located approximately 170 kilometers (110 miles) southeast of Seattle, Washington.

(b) *Population.* Yakima—45,588; [2] Yakima County—144,971.

(c) *Local Aural Broadcast Service.* Yakima is served locally by three fulltime AM stations (KBBO, KIT, KMWX), two daytime-only AM stations (KQOT, KUIT), four commercial FM stations (KATS (Ch. 233), KYBO (Ch. 252A), KUEZ (Ch. 281), KFFM (Ch. 297), and one noncommercial educational FM station (KDNA (Ch. 220)). A construction permit has been granted for educational FM Channel 203A.

3. *Economic Considerations.* Petitioner asserts that, according to the 1977 Census, Yakima has a population of 51,000, which is an increase of 12 percent since 1970. It states that Yakima serves as the central city for a two-county area known as the Yakima Valley Region. Petitioner adds that agriculture is Yakima's economic base and notes that the value for all agricultural products in 1977 was $354,223,079. It claims that the local economy is expanding and that there is a steady growth in all of the industries. Petitioner has submitted additional demographic and economic information in an effort to demonstrate the need for an additional FM assignment.

4. *Preclusion Consideration.* The preclusion study was made assuming the transmitter site for Channel 257A is located 8.5 kilometers (5.3 miles) southeast of Yakima. Preclusion would occur on the co-channel only. Two communities of over 1,000 population are located in the precluded area: Ellensburg (pop. 13,568) has AM and FM stations; Wapato (pop. 2,841) has neither. However, petitioner states that alternate channels are available for assignment to Wapato.

5. The request for a fifth commercial FM assignment to Yakima exceeds the FM population guidelines. However, petitioner claims that Yakima's populations has increased to 51,000. The source of this information should be documented in comments. In addition, since preclusion in the instant case is insignificant, there is a basis for our considering an exception to our population guidelines. See *Popular Bluff, Ark.*, Dkt. 78-188, 45 FR 21636 (1980); *North Platte, Nebr.*, Dkt 79-114, 44 FR

[1] Public Notice of the petition was given on October 31, 1979, Report No. 1198.

[2] Population figures are taken from the 1970 U.S. Census.

67666 (1980); and *St. Simons Island, Ga., Dkt. 79-149, 45 FR 25806 (1980).*

6. Since Yakima is located within 402 kilometers (250 miles) of the U.S.-Canada border, the proposed assignment of Channel 257A to Yakima, Washington, requires coordination with the Canadian Government before it can be assigned.

7. In view of the foregoing, the Commission proposes to amend the FM Table of Assignments, § 73.202(b) of the Commission's rules, with regard to Yakima, Washington, as follows:

City	Channel No.	
	Present	Proposed
Yakima, Washington.	233, 252A, 281, 297	233, 252A, 257A, 281, 297

8. The Commission's authority to institute rule making proceedings, showings required, cut-off procedures, and filing requirements are contained in the attached Appendix below and are incorporated by reference herein.

Note.—A showing of continuing interest is required by paragraph 2 of the Appendix before a channel will be assigned.

9. Interested parties may file comments on or before August 18, 1980, and reply comments on or before September 8, 1980.

10. For further information concerning this proceeding, contact Mildred B. Nesterak, Broadcast Bureau, (202) 632-7792. However, members of the public should note that from the time a notice of proposed rule making is issued until the matter is no longer subject to Commission consideration or court review, all *ex parte* contacts are prohibited in Commission proceedings, such as this one, which involve channel assignements. An *ex parte* contact is a message (spoken or written) concerning the merits of a pending rule making other than comments officially filed at the Commission or oral presentation required by the Commission.

Federal Communications Commission.

Henry L. Baumann,

Chief, Policy and Rules Division, Broadcast Bureau.

Appendix

[BC Docket No. 80-285 RM-3511]

1. Pursuant to authority found in Sections 4(i), 5(d)(l), 303(g) and (r), and 307(b) of the Communications Act of 1934, as amended, and § 0.281(b)(6) of the Commission's rules, it is proposed to amend the FM Table of Assignments, § 73.202(b) of the Commission's rules and regulations, as set forth in the *Notice of Proposed Rule Making* to which this Appendix is attached.

2. *Showings required.* Comments are invited on the proposal(s) discussed in the Notice of Proposed Rule Making to which this Appendix is attached. Proponent(s) will be expected to answer whatever questions are presented in initial comments. The proponent of a proposed assignment is also expected to file comments even if it only resubmits or incorporates by reference its former pleadings. It should also restate its present intention to apply for the channel if it is assigned, and, if authorized, to build the station promptly. Failure to file may lead to denial of the request.

3. *Cut-off procedures.* The following procedures will govern the consideration of filings in this proceeding.

(a) Counterproposals advanced in this proceeding itself will be considered, if advanced in initial comments, so that parties may comment on them in reply comments. They will not be considered if advanced in reply comments. (See § 1.420(d) of Commission rules.)

(b) With respect to petitions for rule making which conflict with the proposal(s) in this Notice, they will be considered as comments in the proceeding, and Public Notice to this effect will be given as long as they are filed before the date for filing initial comments herein. If they are filed later than that, they will not be considered in connection with the decision in this docket.

4. *Comments and reply comments; service.* Pursuant to applicable procedures set out in §§ 1.415 and 1.420 of the Commission's rules and regulations, interested parties may file comments and reply comments on or before the dates set forth in the *Notice of Proposed Rule Making* to which this Appendix is attached. All submissions by parties to this proceeding or persons acting on behalf of such parties must be made in written comments, reply comments, or other appropriate pleadings. Comments shall be served on the petitioner by the person filing the comments. Reply comments shall be served on the person(s) who filed comments to which the reply is directed. Such comments and reply comments shall be accompanied by a certificate of service. (See § 1.420(a), (b) and (c) of the Commission rules.)

5. *Number of copies.* In accordance with the provisions of § 1.420 of the Commission's rules and regulations, an original and four copies of all comments, reply comments, pleadings, briefs, or other documents shall be furnished the Commission.

6. *Public inspection of filings.* All filings made in this proceeding will be available for examination by interested parties during regular business hours in the Commission's Public Reference Room at its headquarters, 1919 M Street, NW., Washington, D.C.

[FR Doc. 80-19594 Filed 6-27-80; 8:45 am]

BILLING CODE 6712-01-M

47 CFR Part 73

[BC Docket No. 80-316; RM-3564]

FM Broadcast Station in Fountain, Colo.; Proposed Changes in Table of Assignments

AGENCY: Federal Communications Commission.

ACTION: Notice of Proposed Rule Making.

SUMMARY: Action taken herein proposes the assignment of a Class A FM channel to Fountain, Colorado, in response to a petition filed by Kurt M. Grow. The porposed channel could provide a first local aural broadcast service to Fountain.

DATES: Comments must be filed on or before August 18, 1980, and reply comments must be filed on or before September 8, 1980.

ADDRESSES: Federal Communications Commission, Washington, D.C. 20554.

FOR FURTHER INFORMATION CONTACT: Montrose H. Tyree, Broadcast Bureau, (202) 632-9660.

SUPPLEMENTARY INFORMATION:

In the matter of amendment of § 73.202(b), FM Broadcast Stations. (Fountain, Colorado), BC Docket No. 80-316, RM-3564.

Adopted: June 18, 1980.

Released: June 25, 1980.

1. *Petitioner, Proposal, Comments* (a) A petition for rule making [1] was filed by Kurt M. Grow ("petitioner"), proposing the assignment of Channel 292A to Fountain, Colorado, as that community's first FM assignment.

(b) The channel can be assigned to Fountain in compliance with the minimum distance separation requirements.

(c) Petitioner failed to state he would apply for the channel, if assigned. He is requested to make a commitment to that effect.

2. *Community Data.*—(a) *Location.* Fountain, in El Paso County, is located approximately 24 kilometers (15 miles) south of Colorado Springs, Colorado.

[1] Public Notice of the petition was given on February 1, 1980, Report No. 1211.

(b) *Population.* Fountain—3,515 [2]; El Paso County—235,972.

(c) *Local Aural Broadcast Service.* None.

3. *Economic Considerations.* Petitioner asserts that Fountain is growing rapidly and attracting new industry. He claims that Fountain's 1977 estimated population was 4,453 as compared to the 1970 figure of 3,515.

4. In view of the fact that the proposed FM channel assignment would provide for a first local aural broadcast service to Fountain, the Commission believes it appropriate to propose amending the FM Table of Assignments, § 73.202(b) of the Commission's rules, with regard to Fountain, Colorado, as follows:

City	Channel No.	
	Present	Proposed
Fountain, Colorado		292A

5. The Commission's authority to institute rule making proceedings, showings required, cut-off procedures, and filing requirements are contained in the attached Appendix below and are incorporated by reference herein.

Note.—A showing of continuing interest is required by paragraph 2 of the Appendix before a channel will be assigned.

6. Interested parties may file comments on or before August 18, and reply comments on or before September 8, 1980.

7. For further information concerning this proceeding, contact Montrose H. Tyree, Broadcast Bureau, (202) 632-9660. However, members of the public should note that from the time a notice of proposed rule making is issued until the matter is no longer subject to Commission consideration or court review, all *ex parte* contacts are prohibited in Commission proceedings, such as this one, which involve channel assignments. An *ex parte* contact is a message (spoken or written) concerning the merits of a pending rule making other than comments officially filed at the Commission or oral presentation required by the Commission.

Federal Communications Commission.

Henry L. Baumann,

Chief, Policy and Rules Division, Broadcast Bureau.

Appendix

[BC Docket No. 80-316; RM-3564]

1. Pursuant to authority found in Sections 4(i), 5(d)(1), 303(g) and (r), and 307(b) of the Communications Act of 1934, as amended, and § 0.281(b)(6) of the Commission's rules, it is proposed to amend the FM Table of Assignments, § 73.202(b) of the Commission's rules and regulations, as set forth in the *Notice of Proposed Rule Making* to which this Appendix is attached.

2. *Showings required.* Comments are invited on the proposal(s) discussed in the Notice of Proposed Rule Making to which this Appendix is attached. Proponent(s) will be expected to answer whatever questions are presented in initial comments. The proponent of a proposed assignment is also expected to file comments even if it only resubmits or incorporates by reference its former pleadings. It should also restate its present intention to apply for the channel if it is assigned, and, if authorized, to build the station promptly. Failure to file may lead to denial of the request.

3. *Cut-off procedures.* The following procedures will govern the consideration of filings in this proceeding.

(a) Counterproposals advanced in this proceeding itself will be considered, if advanced in initial comments, so that parties may comment on them in reply comments. They will not be considered if advanced in reply comments. (See § 1.420(d) of Commission rules.)

(b) With respect to petitions for rule making which conflict with the proposal(s) in this Notice, they will be considered as comments in the proceeding, and Public Notice to this effect will be given as long as they are filed before the date for filing initial comments herein. If they are filed later than that, they will not be considered in connection with the decision in this docket.

4. *Comments and reply comments; service.* Pursuant to applicable procedures set out in §§ 1.415 and 1.420 of the Commission's rules and regulations, interested parties may file comments and reply comments on or before the dates set forth in the *Notice of Proposed Rule Making* to which this Appendix is attached. All submissions by parties to this proceeding or persons acting on behalf of such parties must be made in written comments, reply comments, or other appropriate pleadings. Comments shall be served on the petitioner by the person filing the comments. Reply comments shall be served on the person(s) who filed comments to which the reply is directed. Such comments and reply comments shall be accompanied by a certificate of service. (See § 1.420(a), (b) and (c) of the Commission rules.)

5. *Number of copies.* In accordance with the provisions of § 1.420 of the Commission's rules and regulations, an original and four copies of all comments, reply comments, pleadings, briefs, or other documents shall be furnished the Commission.

6. *Public inspection of filings.* All filings made in this proceeding will be available for examination by interested parties during regular business hours in the Commission's Public Reference Room at its headquarters, 1919 M Street, N.W., Washington, D.C.

[FR Doc. 80-19591 Filed 6-27-80; 8:45 am]
BILLING CODE 6712-01-M

[2] Population figures are taken from the 1970 U.S. Census.

[Docket 21006, FCC 80-126]

47 CFR Part 76

Adding Frequency Channeling Requirements and Restrictions and Requiring Monitoring for Signal Leakage From Cable Television Systems; Correction

AGENCY: Federal Communications Commission.

ACTION: Correction of proposed rulemaking.

SUMMARY: The Commission is correcting FR Docket 80-9090 (45 FR 19578 March 26, 1980) which proposed new rules to prevent interference in the air space from cable television signal leakage.

DATES: Comment and reply dates remain June 25, 1980 and July 10, 1980, respectively.

Released: June 2, 1980.

It has come to our attention that there is an error in the Commission's Further Notice of Proposed Rulemaking in Docket 21006, FCC 80-126 (45 FR 19578) released March 24, 1980. The beginning of paragraphs 8(4)(b) of that Further Notice of Proposed Rulemaking should read "Show that 10 log I is equal to or less than 64, when E_i is expressed in microvolts per meter, prior to * * *," where our original release gave 34 instead of 64 as the criterion for acceptability. As a matter of clarification, paragraph 8(4)(a) should begin "Show that 10 log I_{3000} is equal to or less than −7, when E_i is expressed in microvolts per meter and R_i is in meters, prior to * * *"

The error arose from failure to note that the values for I given in Table G.3 of the Final Report of FCC's Advisory Committee on Cable Signal Leakage [1] had been reduced by a factor of 1,000, for convenience. This led to the numbers on the abscissas of Figures I.2, I.6, I.9, I.10, I.12, I.21, and I.22 of that Report being lower by 30 than they

[1] Available from the National Technical Information Center under the accession number PB 80-119605.

should have been. The abscissas in all those cases should have been labelled 40, 45, 50, 60, 70, 75 instead of 10, 15, 20 etc.

Correction of this error makes no substantive change in our proposed approach to setting criteria for cable system leakage. It merely corrects the numerical value of the I criterion so that in most cases a system which is acceptable on the basis of the I_{3000} test will also pass the I test, and vice versa.

Federal Communications Commission.

William J. Tricarico,

Secretary.

[FR Doc. 80-19568 Filed 6-27-80; 8:45 am]

BILLING CODE 6712-01-M

Notices

Federal Register
Vol. 45, No. 127
Monday, June 30, 1980

This section of the FEDERAL REGISTER contains documents other than rules or proposed rules that are applicable to the public. Notices of hearings and investigations, committee meetings, agency decisions and rulings, delegations of authority, filing of petitions and applications and agency statements of organization and functions are examples of documents appearing in this section.

DEPARTMENT OF AGRICULTURE

Farmers Home Administration

Business and Industrial Loans; Insured Loan Interest Rates

AGENCY: Farmers Home Administration, USDA.

ACTION: Notice.

SUMMARY: Notice is hereby given by the Farmers Home Administration that the current rate of interest for insured business and industrial loans, established pursuant to 7 CFR § 1980.423(b) is as follows:

a. Insured loans for other than public bodies in rural areas will be at the rate of twelve and seven-eights (12⅞%). This rate will remain in effect until a change is published in the Federal Register.

Funds are very limited for this program. $10 million is available nationwide for Fiscal Year 1980.

EFFECTIVE DATE: Upon publication in Federal Register.

FOR FURTHER INFORMATION CONTACT: Mr. LaVerne A. Isenberg, Room 4118, Farmers Home Administration, USDA, Washington, DC 20250. Phone: 202-447-4871.

Dated: June 13, 1980.

James E. Thornton,

Administrator, Farmers Home Administration.

[FR Doc. 80-19403 Filed 6-27-80; 8:45 am]

BILLING CODE 3410-07-M

Office of the Secretary

Meat Import Limitations; Third Quarterly Estimate

Public Law 88-482, approved August 22, 1964 as amended by the Meat Import Act of 1979 (hereinafter referred to as the "Act"), provides for limiting the quantity of fresh, chilled, or frozen meat of cattle, sheep except lamb, and goats (TSUS 106.10, 106.22, and 106.25), and certain prepared or preserved beef and veal products (TSUS 107.55, 107.61, and 107.62), which may be imported into the United States in any calendar year. Such limitations are to be imposed when it is estimated by the Secretary of Agriculture that imports of articles provided for in TSUS 106.10, 106.22, 106.25, 107.55 and 107.62 (hereinafter referred to as "meat articles"), in the absence of limitations under the Act during such calendar year, would equal or exceed 110 percent of the estimated quantity of meat articles prescribed by Section 2(c) of the Act.

In accordance with the requirements of the Act, the following third quarterly estimates for 1980 are published.

1. The estimated aggregate quantity of meat articles prescribed by Section 2(c) of the Act during the calendar year 1980 is 1,516 million pounds.

2. The estimated aggregate quantity of meat articles which would, in the absence of limitations under the Act, be imported during calendar year 1980 is 1,420 million pounds.

Since the estimated quantity of imports is less than 110 percent of the estimated quantity prescribed by Section 2(c) of the Act, no limitations for the calendar year 1980 on the importation of fresh, chilled, or frozen meat of cattle, sheep except lamb, and goats (TSUS 106.10, 106.22, and 106.25), and certain prepared or preserved beef and veal products (TSUS 107.55, 107.61 and 107.62), are required under the Act.

Done at Washington, D.C. this 25th day of June 1980.

Bob Bergland,

Secretary.

[FR Doc. 80-19606 Filed 6-27-80; 8:45 am]

BILLING CODE 3410-10-M

CIVIL AERONAUTICS BOARD

[Dockets 33363, 38008, 38009]

Former Large Irregular Air Service Investigation, Phase III Applications of Genair International, Inc.; Hearing

Notice is hereby given, pursuant to the Federal Aviation Act of 1958, as amended, that a hearing in the above-entitled proceeding is assigned to be held on July 21, 1980, at 10:00 a.m. (local time), in Room 1003, Hearing Room B, Universal North Building, 1875 Connecticut Avenue NW., Washington, D.C., before the undersigned administrative law judge.

Dated at Washington, D.C., June 24, 1980.

William A. Pope II,

Administrative Law Judge.

[FR Doc. 80-19540 Filed 6-27-80; 8:45 am]

BILLING CODE 6320-01-M

[Order 80-6-150; Docket No. 27817]

Wardair Canada (1975), Ltd. Application

AGENCY: Civil Aeronautics Board.

ACTION: Notice of order to show cause.

SUMMARY: The Board proposes to approve the following application:

Applicant: Wardair Canada (1975), Ltd.

Application Date: May 8, 1975, amended September 28, 1979.

Authority Sought: Renew and amend its two foreign air carrier permits authorizing, in the first permit, charter flights of persons and property between the United States and Canada, and, in the second permit, charter flights of persons and property between the United States and third countries, other than Canada, as well as circle tour charter flights from Canada. Both permits would be subject to conditions and limitations.

OBJECTIONS: All interested persons having objections to the Board's tentative findings and conclusions that this authority should be granted, as described in the order cited above, shall NO LATER THAN July 17, 1980, file a statement of such objections with the Civil Aeronautics Board (20 copies) and mail copies to the applicant, the Department of Transportation, the Department of State, and the Ambassador of Canada in Washington, D.C. A statement of objections must cite the docket number and must include a summary of testimony, statistical data, or other such supporting evidence.

If no objections are filed, the Secretary of the Board will enter an order which will, subject to disapproval by the President, make final the Board's tentative findings and conclusions and issue the proposed permits.

ADDRESSES FOR OBJECTIONS:

Docket 27817, Docket Section, Civil Aeronautics Board, Washington, D.C. 20428.

Applicant: Wardair Canada (1975), Ltd., c/o Burwell, Hansen & Manley, Suite

550, 1815 H Street, N.W., Washington, D.C. 20006.

TO GET A COPY OF THE COMPLETE ORDER: Request it from the C.A.B. Distribution Section, Room 516, 1825 Connecticut Avenue, N.W., Washington, D.C. 20428. Persons outside the Washington metropolitan area may send a postcard request.

FOR FURTHER INFORMATION CONTACT: C. Robert Mallalieu, Negotiations Division, Bureau of International Aviation, Civil Aeronautics Board, (202) 673-5044.

By the Civil Aeronautics Board.

Phyllis T. Kaylor,

Secretary.

[FR Doc. 80-19539 Filed 6-27-80; 8:45 am]

BILLING CODE 6320-01-M

CIVIL RIGHTS COMMISSION

California Advisory Committee; Agenda and Notice of Open Meeting

Notice is hereby given, pursuant to the provisions of the Rules and Regulations of the U.S. Commission on Civil Rights, that a planning meeting of the California Advisory Committee (SAC) of the Commission will convene at 10 a.m. and will end at 2 p.m., on July 26, 1980 at the Holiday Inn, Capitol Plaza, Sacramento, California.

Persons wishing to attend this open meeting should contact the Committee Chairperson, or the Western Regional Office, 312 North Spring Street, Rm. 1015, Los Angeles, California 90012.

The purpose of this meeting is to discuss and plan State Advisory Committee activities for fiscal year 1981.

This meeting will be conducted pursuant to the provisions of the Rules and Regulations of the Commission.

Dated at Washington, D.C., June 24, 1980.

Thomas L. Neumann,

Advisory Committee Management Officer.

[FR Doc. 80-19530 Filed 6-27-80; 8:45 am]

BILLING CODE 6335-01-M

Indiana Advisory Committee; Agenda and Notice of Open Meeting

Notice is hereby given, pursuant to the provisions of the Rules and Regulations of the U.S. Commission on Civil Rights, that a Factfinding meeting of the Indiana Advisory Committee (SAC) of the Commission will convene at 7:00 p.m. and will end at 10:00 p.m., on July 14, 1980 at the Roy C. Buley Center, 1111 North Penn. Street, Muncie, Indiana.

Persons wishing to attend this open meeting should contact the Committee Chairperson, or the Midwestern Regional Office of the Commission, 230 South Dearborn Street, 32nd Floor, Chicago, Illinois 60604.

The purpose of this meeting is to review the status of the proposed housing study on Muncie, Terre Haute, Lake and Porter Counties in Northwest Indiana; receive data and statements from community groups and residents of Muncie of problems covering civil rights issues; SAC Full Committee will review the proposed outline prepared by staff on the employment study of city, county government in Indianapolis, Indiana; and new business.

This meeting will be conducted pursuant to the provisions of the Rules and Regulations of the Commission.

Dated at Washington, D.C., June 24, 1980.

Thomas L. Neumann,

Advisory Committee Management Officer.

[FR Doc. 80-19528 Filed 6-27-80; 8:45 am]

BILLING CODE 6335-01-M

Michigan Advisory Committee; Amendment

Notice is hereby given, pursuant to the provisions of the Rules and Regulations of the U.S. Commission on Civil Rights, that a planning meeting of the Michigan Advisory Committee (SAC) of the Commission originally scheduled for July 11, 1980, at East Lansing, Michigan (FR Doc. 80-18026 p. 40630) has been changed.

The meeting will now be held on July 10, 1980. The meeting place and time will remain the same.

Dated at Washington, D.C., June 25, 1980.

Thomas L. Neumann,

Advisory Committee Management Officer.

[FR Doc. 80-19527 Filed 6-27-80; 8:45 am]

BILLING CODE 6335-01-M

Nevada Advisory Committee; Agenda and Notice of Open Meeting

Notice is hereby given, pursuant to the provisions of the Rules and Regulations of the U.S. Commission on Civil Rights, that a planning meeting of the Nevada Advisory Committee (SAC) of the Commission will convene at 7:00 pm and will end at 10:00 pm, on July 18, 1980 at the Marina Hotel and Casino, 3805 Las Vegas Boulevard, South Las Vegas, Nevada.

Persons wishing to attend this open meeting should contact the Committee Chairperson, or the Western Regional Office, 312 North Spring St., Rm. 1015, Los Angeles, California 90012.

The purpose of this meeting is to plan State Advisory Committee Activities for fiscal year 1981.

This meeting will be conducted pursuant to the provisions of the Rules and Regulations of the Commission.

Dated at Washington, D.C. June 24, 1980.

Thomas L. Neumann,

Advisory Committee Management Officer.

[FR Doc. 80-19531 Filed 6-27-80; 8:45 am]

BILLING CODE 6335-01-M

New Hampshire Advisory Committee; Agenda and Notice of Open Meeting

Notice is hereby given, pursuant to the provisions of the Rules and Regulations of the U.S. Commission on Civil Rights, that a planning of the New Hampshire Advisory Committee (SAC) if the Commission will convene at 7:30 am and will end at 9:30 am, on August 12, 1980, at the Federal Building, 275 Chestnut Street, Conference Room, Manchester, New Hampshire.

Persons wishing to attend this open meeting should contact the Committee Chairperson, or the New England Regional Office of the Commission, 55 Summer Street, 8th Floor, Boston, Massachusetts 02110.

The purpose of this meeting is to discuss upcoming release of Battered Women report and Hispanic project.

This meeting will be conducted pursuant to the provisions of the Rules and Regulations of the Commission.

Dated at Washington, D.C., June 23, 1980.

Thomas L. Neumann,

Advisory Committee Management Officer.

[FR Doc. 80-19533 Filed 6-27-80; 8:45 am]

BILLING CODE 6335-01-M

Oregon Advisory Committee; Agenda and Notice of Open Meeting

Notice is hereby given, pursuant to the provisions of the Rules and Regulations of the U.S. Commission on Civil Rights, that a planning meeting of the Oregon Advisory Committee (SAC) of the Commission will convene at 10 a.m. and will end at 12 a.m., on July 18, 1980 at the Benson Hotel, Executive Suite D, 309 S.W. Broadway at Oak, Portland, OR 97205.

Persons wishing to attend this open meeting should contact the Committee Chairperson, or the Northwestern Regional Office, 915 Second Ave., Rm. 2852, Seattle, Washington 98174.

The purpose of this meeting is program planning.

This meeting will be conducted pursuant to the provisions of the Rules and Regulations of the Commission.

Dated at Washington, D.C., June 24, 1980.

Thomas L. Neumann,

Advisory Committee Management Officer.

[FR Doc. 80-19532 Filed 6-27-80; 8:45 am]

BILLING CODE 6335-01-M

Rhode Island Advisory Committee; Agenda and Notice of Open Meeting

Notice is hereby given, pursuant to the provisions of the Rules and Regulations of the U.S. Commission on Civil Rights, that a planning meeting of the Rhode Island Advisory Committee (SAC) of the Commission will convene at 5:00 pm and will end at 7:00 pm, on July 16, 1980 at the Brown University, Third World Center, 155 Angell Street, Providence, Rhode Island.

Persons wishing to attend this open meeting should contact the Committee Chairperson, or the New England Regional Office of the Commission, 55 Summer Street, 8th Floor, Boston, Massachusetts 02110.

The purpose of this meeting is Consultation planning and administrative activities.

This meeting will be conducted pursuant to the provisions of the Rules and Regulations of the Commission.

Dated at Washington, D.C., June 23, 1980.

Thomas L. Neumann,

Advisory Committee Management Officer.

[FR Doc. 80-19529 Filed 6-27-80; 8:45 am]

BILLING CODE 6335-01-M

DEPARTMENT OF COMMERCE

International Trade Administration

[Case No. 593]

Franz Eggeling and Memisco Anstalt; Export Privileges Denied

In 1967, Franz Eggeling, Postfach 239, Vienna III, Austria; Renweg 2, 8001, Zurich, Switzerland; FL 9490, Vaduz, Liechtenstein, and the company controlled by him, Memisco Anstalt, a.k.a. Memisco, FL 9490, Vaduz, Liechtenstein, were suspected of conspiring and participating in an elaborate scheme to divert controlled American commodities to proscribed Eastern European destinations. After the parties failed to respond to interrogatories relating to suspected diversions, they were denied all export privileges for an indefinite period. 32 FR 7223 (May 13, 1967). The parties again came under suspicion (1976) for complicity in the unlawful diversion of a COCOM controlled oscilloscope and other controlled items of U.S. origin.

A charging letter, dated January 23, 1980, was duly served upon the parties. It charged them with violating the Export Administration Act and regulations by knowingly financing, forwarding, and transporting commodities and/or technical data to prohibited destinations.

The parties failed to answer. Although their default may be taken as an admission of truth of the charges, the report of investigation upon which the charging letter was predicated was submitted for consideration as part of the record. Based upon the assembled record, I find the parties knowingly and willfully violated the Export Administration Act and regulations, as alleged in the charging letter.

THEREFORE, pursuant to the authority vested in me, it is hereby

Ordered

That Franz Eggeling and Memisco Anstalt are denied all export privileges as provided in the earlier order of May 13, 1967, in accordance with Part 388 of the Export Administration Regulations, and that the denial of such privileges be continued to and including May 31, 1990.

This Order shall become effective immediately.

Dated: June 23, 1980.

Bertram Freedman,

Hearing Commissioner.

[FR Doc. 80-19472 Filed 6-27-80; 8:45 am]

BILLING CODE 3510-25-M

National Oceanic and Atmospheric Administration

North Pacific Fishery Management Council and Scientific and Statistical Committee and Advisory Panel; Public Meetings

AGENCY: National Marine Fisheries Service, NOAA.

SUMMARY: The North Pacific Fishery Management Council, established by Section 302 of the Fishery Conservation and Management Act of 1976 (Pub. L. 94-265), its Scientific and Statistical Committee (SSC) and Advisory Panel (AP) will hold joint and separate meetings.

DATES: The Council meeting will convene Thursday, July 24, 1980, at 8:30 a.m., and adjourn Friday, July 25, 1980, at 5 p.m. in the Kenai/Aleutian Room of the Anchorage Westward Hilton, 3rd Avenue and E Streets, Anchorage, Alaska. The SSC meeting will convene Tuesday, July 22, 1980, at 9 a.m., and will adjourn July 23, 1980 at 5 p.m., in the Council Headquarters Conference Room, 333 West Fourth Avenue, Suite 32, Anchorage, Alaska. The AP meeting will convene Wednesday, July 23, 1980, at 9 a.m., and will adjourn at 5 p.m., in the Kenai/Aleutian Room of the Anchorage Westward Hilton Hotel, 3rd Avenue and E Streets, Anchorage, Alaska. The meetings may be lengthened or shortened depending upon progress on the agenda. The meetings are open to the public.

FOR FURTHER INFORMATION CONTACT: North Pacific Fishery Management Council, P.O. Box 3136 DT, Anchorage, Alaska 99510, Telephone: (907) 274-4563.

PROPOSED AGENDA:

Council

Special Note: Preregistration (except in special or unusual cases) will be required for all public comments which pertain to a specific agenda topic. Preregistration is accomplished by informing the Agenda Clerk as early as possible of the agenda item to be addressed and the time requested. Preregistration and public comment may be scheduled for: E. Old Business. F. New Business agenda items. G. Fishery Management Plans.

The following agenda items will be discussed by the Council: A. Call to Order and Approval of Agenda. B. Approval of May Minutes. C. Executive Director's Report. D. Special Reports. D-1. Alaska Department of Fish and Game Report on Domestic Fisheries. D-2. National Marine Fisheries Service Report on Foreign Fisheries. D-3. U.S. Coast Guard Report on Enforcement and Surveillance. D-4. Report on spring herring fishery, catches, problems, and resource survey. D-5. Report on walrus/surf clam study. E. Old Business. E-1. Report on Council operations and policy. E-2. Report on Fishery Conservation and Management Act amendments in process. E-3. Other old business. F. New Business. F-1. Review permit applications from the Federal Republic of Germany, German Democratic Republic, and Spain. F-2. Consider new business as appropriate. G. Fishery Management Plans. G-1. King Crab Fishery Management Plan: review draft for release to public review. G-2. Bering Sea/Aleutian Groundfish Fishery Management Plan: final action on 1981 amendent package. Adjust joint venture permit for 1980.

G-3. Surf Clams in the Bering Sea: Consider future action on plan. G-4. Gulf of Alaska Groundfish: Final action on total allowable catch concept for prohibited species and trawl closure to protect Kodiak area crab fishery. Adjust joint venture permit for 1980 and sablefish domestic annual harvest for 1980. G-5. Salmon Fishery Management Plan: Review 1980 fishery and progress on 1981 plan. G-6. Tanner Crab Fishery Management Plan: Review of 1980

fishery. H. Reports, Contracts, Proposals. I. Finance Reports: Approval of 1981 budget proposal. J. Public Comments. K. Chairman's Closing Remarks and Adjournment.

SSC/AP Agenda Same as Council

Dated: June 24, 1980.

Winfred H. Meibohm,

Executive Director, National Marine Fisheries Service.

[FR Doc. 80-19572 Filed 6-27-80; 8:45 am]

BILLING CODE 3510-22-M

COMMITTEE FOR THE IMPLEMENTATION OF TEXTILE AGREEMENTS

Certain Man-Made Fiber Textile Products Produced or Manufactured in Costa Rica

Supplemental Information

June 26, 1980.

On June 19, 1980, there was published in the Federal Register (45 FR 41477) a notice announcing discussions or consultations with the Government of Costa Rica, commencing on June 30, 1980, oriented toward arriving at a mutually acceptable level of exports to the United States of man-made fiber textile products in Category 649 (brassieres), produced or manufactured in Costa Rica. Information relating to the market impact of imports in Category 649 was inadvertently omitted from the notice. That information is published below.

Arthur Garel,

Acting Chairman, Committee for the Implementation of Textile Agreements.

Market Statement—Costa Rica

Category 649—Body Supporting Garments

May 13, 1980.

Apparel items contained in this category include all man-made fiber brassieres, girdles, corsets, and other body supporting garments.

U.S. domestic production of man-made fiber body supporting garments declined from 22.1 million dozen in 1970 to 19.2 million dozen in 1978. Brassieres account for 79 percent of U.S. production of the items in this category. Even though U.S. production has increased slightly in some years during the 1970's the ratio of imports to domestic production has continued to rise. The import-to-production ratio increased every year since 1970, rising from 12.1 in 1970 to 47.7 in 1977, to 56.7 in 1978. Indications are that U.S. production of body supporting garments continued to decline after 1978.

Total U.S. imports of man-made fiber body supporting garments increased every year since 1970, increasing from 2,674 thousand dozen in 1970 to 11,407 thousand dozen in 1979, to 12,139 thousand dozen for the year ending March 1980. Brassieres accounted for 96 percent of this total.

Costa Rica is the fourth largest supplier of these items to the United States, supplying 11.9 percent of total imports. The Philippine Republic is the largest supplier with 24.8 percent, followed by Mexico with 15.0 percent and the Dominican Republic with 12.9 percent.

Imports from Costa Rica increased from 1,139 thousand dozen in 1978 to 1,373 thousand dozen in 1979, to 1,450 thousand dozen in the year ending March 1980. Brassieres, both ornamented and non-ornamented, account for 96 percent of these items imported from Costa Rica.

Forty-six percent of the brassieres imported from Costa Rica are imported under TSUSA #376.2430, ornamented, and 50 percent under TSUSA #376.2830, not ornamented. These imports are under Item 807 of the TSUS.

The average duty-paid value of ornamented bras from Costa Rica is above those of Jamaica, Haiti, and the Philippines but not above those of other major suppliers. The average duty-paid value of non-ornamented bras from Costa Rica is higher than the value of those from the Philippines. Although the imports from the Philippines are under Item 807, practically all of the components are foreign origin which probably explains the lower prices. These bras from Costa Rica are available to the U.S. manufacturer at a cost saving representing the differences in costs for assembly between Costa Rica and the U.S. minus the cost of shipping to and from Costa Rica and duty on non-Item 807 portions.

Production, Imports and Import /Production Ratios Body Supporting Garments Man-Made Fiber, Category 649

[1,000 Dozen]

Year	Production	Imports	Ratio
1970	22,109	2,674	12 1
1971	21,870	3,745	17 1
1972	22,122	4,779	21 6
1973	21,330	5,353	25 1
1974	18,692	5,868	31 4
1975	17,899	6,573	36 7
1976	19,525	8,378	42 9
1977	19,728	9,403	47 7
1978 Prel	19,217	10,894	56.7

U.S. General Imports of Man-Made Fiber Body Supporting Garments Category 649

[1,000 Dozen]

Period	Costa Rica	World
1977	1,047.9	9,402.9
1978	1,138.9	10,894.1
1979	1,372.7	11,407.4
YE 3/80	1,449.5	12,138.6
Jan.-Mar.		
1979	291.2	2,463.3
1980	368.0	3,194.5

Import Values[1] and Domestic Prices

[U.S. $ per dozen]

TSUSA #376.2430, Brassieres, MMF, Ornamented	
Costa Rica	$15.10
Mexico	21.60
Dominican Republic	18.60
Hong Kong	16.20
Jamaica	14.15
Haiti	13.45
Philippines	9.40
United States	39.15
TSUSA #376.2830, Brassieres, MMF, Not Ornamented	
Costa Rica	$12.95
Mexico	16.40
Dominican Republic	13.75
Hong Kong	13.25
Honduras	12.95
Philippines	9.70
United States	35.40

[1] Average Duty-Paid Value.

[FR Doc. 80-19805 Filed 6-27-80; 8:45 am]

BILLING CODE 3510-25-M

Increasing the Levels of Restraint for Certain Cotton and Man-Made Fiber Textile Products from India

June 25, 1980.

AGENCY: Committee for the Implementation of Textile Agreements.

ACTION: Increasing the consultation levels for cotton nightwear in Category 351, for other apparel items, including cotton mufflers, neckties, and headwear, among others, in Category 359, and for other furnishings, such as blankets, bedspreads and quilts of man-made fibers in Category 666, produced or manufactured in India and exported to the United States during the twelve-month period which began on January 1, 1980; and controlling imports in Category 351 at the increased level for the designated period. (A detailed description of the textile categories in terms of T.S.U.S.A. numbers was published in the Federal Register on February 28, 1980 (45 FR 13172), as amended on April 23, 1980 (45 FR 27463)).

SUMMARY: Under the terms of the Bilateral Cotton, Wool and Man-Made Fiber Textile Agreement of December 30, 1977, as amended, between the Governments of the United States and India, agreement has been reached to increase the consultation levels

established for Categories 351, 359 and 666 to 240,038 dozen, 869,565 pounds and 1,025,641 pounds, respectively, during the agreement year which began on January 1, 1980 and extends through December 31, 1980.

EFFECTIVE DATE: June 30, 1980.

FOR FURTHER INFORMATION CONTACT: Rose Arnold, International Trade Specialist, Office of Textiles and Apparel, U.S. Department of Commerce, Washington, D.C. 20230 (202/377-5423).

SUPPLEMENTARY INFORMATION: On December 28, 1979, there was published in the Federal Register (44 FR 76840) a letter dated December 21, 1979 from the Chairman of the Committee for the Implementation of Textile Agreements to the Commissioner of Customs which established levels of restraint for certain cotton, wool and man-made fiber textile products, including Categories 359 and 666, produced or manufactured in India, which may be entered into the United States for consumption, or withdrawal from warehouse for consumption, during the twelve-month period which began on January 1, 1980 and extends through December 31, 1980. In the letter published below the Chairman of the Committee for the Implementation of Textile Agreements directs the Commissioner of Customs to increase the previously established levels of restraint for Categories 359 and 666 and to control imports of cotton textile products in Category 351 at the designated level.

Arthur Garel,

Acting Chairman, Committee for the Implementation of Textile Agreements.

June 25, 1980.

Committee for the Implementation of Textile Agreements

Commissioner of Customs, Department of the Treasury, Washington, D.C. 20229

Dear Mr. Commissioner:

This directive further amends, but does not cancel, the directive issued to you on December 21, 1979 by the Chairman, Committee for the Implementation of Textile Agreements, concerning imports into the United States of certain cotton, wool and man-made fiber textile products, produced or manufactured in India.

Under the terms of the Arrangement Regarding International Trade in Textiles done at Geneva on December 20, 1973, as extended on December 15, 1977; pursuant to the Bilateral Cotton, Wool and Man-Made Fiber Textile Agreement of January 9 and 21, 1978, as amended, between the Governments of the United States and India; and in accordance with the provisions of Executive Order 11951 of January 6, 1977, you are directed, effective on June 30, 1980 and for the twelve-month period beginning on January 1, 1980 and extending through December 31, 1980, to amend the directive of December 21, 1979 to include a level of restraint for cotton textile products in Category 351 and increase levels for cotton and man-made fiber textile products in Categories 359 and 666, produced or manufactured in India, as follows:

Category	Twelve-Month Level of Restraint[1]
351 (visaed)	24,038 dozen
359 (visaed)	869,565 pounds
666 (visaed)	1,025,641 pounds

[1] The levels of restraint have not been adjusted to reflect any imports after December 31, 1979.

Cotton textile products in Category 351 which have been released from the custody of the U.S. Customs Service under the provisions of 19 U.S.C. 1448(b) or 1484(a)(1)(A) prior to the effective date of this directive shall not be denied entry under this directive.

The action taken with respect to the Government of India and with respect to imports of cotton and man-made fiber textile products from India has been determined by the Committee for the Implementation of Textile Agreements to involve foreign affairs functions of the United States.

Therefore the directions to the Commissioner of Customs which are necessary for the implementation of such actions, fall within the foreign affairs exception to the rule-making provisions of 5 U.S.C. 553. This letter will be published in the Federal Register.

Sincerely,

Arthur Garel,

Acting Chairman, Committee for the Implementation of Textile Agreements.

[FR Doc. 80-19616 Filed 6-27-80; 8:45 am]

BILLING CODE 3510-25-M

COMMODITY FUTURES TRADING COMMISSION

Proposed Disapproval of Contract Market Rules; Public Comment

AGENCY: Commodity Futures Trading Commission.

SUMMARY: The Commodity Futures Trading Commission is announcing its intent to consider, pursuant to section 5a(12) of the Commmodity Exchange Act (the "Act"), 7 U.S.C. 7a(12) (1976), as amended by the Futures Trading Act of 1978, Pub. L. No. 95-405, section 12, 92 Stat. 871 (1978), whether to disapprove rule 502, silver rule 1(b), and gold rule 1(b) of the Commodity Exchange, Inc., ("Comex" or "Exchange"). These rules authorize a trading session to take place at the exchange after the close of regular trading and limit executions during the session to those involving spreads or straddles executed at a differential. The Commission believes that consideration of whether to disaprove these rules as appropriate at this time in view of the substantial legal and policy issues raised by these rules and summarized below.

DATE: Comments must be received on or before August 29, 1980.

ADDRESS: Interested persons should submit comments to: Commodity Futures Trading Commission, 2033 K Street, N.W., Washington, D.C. 20581. Attention: Office of the Secretariat (Telephone: (202) 254-6314).

FOR FURTHER INFORMATION CONTACT: Harold L. Hardman, Division of Trading and Markets, 2033 K Street, N.W., Washington, D.C. 20581, Telephone: (202) 254-8955.

SUPPLEMENTARY INFORMATION: The Commission has reviewed rule 502,[1]

[1] Rule 502 provides as follows: The hours for trading in the several commodities shall be as follows (unless otherwise ordered in accordance with the By-Laws and Rules):

Name of commodiy, hour for opening and closing:
Copper—9:50 a.m. to 2:00 p.m.
Silver—9:40 a.m. to 2:15 p.m.
Gold—9:25 a.m. to 2:30 p.m.
Zinc—10:15 a.m. to 12:45 p.m.

The President shall have the authority to extend the closing time for any commodity when in his judgment such extension shall be desirable to enable the floor brokers to complete their orders for execution of straddles; but the President shall not exercise such authority except under extraordinary circumstances. In the event that the President expects to be absent at any closing hour, he may in advance thereof appoint a deputy who shall have the authority of the President which he may exercise in accordance with the terms and conditions of this rule.

[2] Silver rule 1(b) provides as follows: The hours for trading in silver shall be from 9:40 a.m. to 2:15 p.m., subject to the following exception: (b) When in the judgment of the President or the Floor Committee the maintenance of an orderly handling of straddle orders requires an extension of trading beyond 2:15 p.m. for the handling of straddle orders only, the President or the Floor Committee, as the case may be, shall have the authority to establish a call immediately after 2:15 p.m. The call so established shall begin with the current or nearby month and shall extend through the latest trading month. The call shall terminate no later than 3:00 p.m. provided, however, that it may be extended beyond that hour by the President or his deputy pursuant to General Trading Rule 502. Straddle orders executed during this period shall be reported and recorded in the official record of transactions.

[3] Gold rule 1(b) provides as follows: The hours for trading in gold shall be from 9:25 a.m. to 2:30 p.m., subject to the following exception: (b) When in the judgment of the President or the Floor Committee, the maintenance of an orderly handling of straddle orders requires an extension of trading beyond 2:30 p.m. for the handling of straddle orders only, the President or the Floor Committee, as the case may be, shall have the authority to establish a call immediately after 2:30 p.m. The call so established shall begin with the current or nearby month and shall extend through the latest trading month. The call shall terminate no later than 3 p.m. provided, however, that it may be extended beyond that hour by the President or his deputy pursuant to General Trading Rule 502. Straddle orders executed during this period, shall be reported and recorded in the official record of transactions.

[4] 7 U.S.C. 7(a)(12) (1976), as amended by the Futures Trading Act of 1978, Pub. L. No. 95-405, section 12, 92 Stat. 871 (1978). Section 5a(12) of the Act provides in pertinent part that: a contract market shall submit to the Commission for its

Footnotes continued on next page

silver rule 1(b)[2] and gold rule 1(b)[3] of the Comex, which authorize a trading session to tale place after the close of the regular trading session on that Exchange and limit executions during that session to those involving spreads executed at a differential ("the Straddle Call Session" or the "Session"). These rules were submitted for commission approval, pursuant to section 5a(12) of the Act,[4] as amended, during the process by which the Commission designated the Exchange as a contract market for the trading of futures contracts in gold and silver.[5] As part of its examination of these rules, the Commission also has considered the information provided by the Exchange in meetings with the Commission's staff on July 2, 1975, January 12 and 25, 1977, and September 20, 1979; and in letters from Lee H. Berendt, President of the Exchange, dated July 9, 1975, April 5, 1977 and April 7, 1980.[6]

Operation of the Straddle Call Session

The following description of the Comex Straddle Call Session, as it takes place in silver, is based upon the operation of Comex rules, descriptions of the Session as provided by Comex, and observations of the Session by Commission staff. Although Comex rule 502 and silver rule 1(b) appear to contemplate the exercise of judgment and discretion in the Exhange's determination to conduct a Straddle Call Session on any given day, the Exchange routinely conducts the Session on a daily basis for silver trading.[7]

Trading in the Comex silver pit ceases at 2:15 p.m. Settlement prices are then established and posted at the Exchange at approximately 2:25 p.m. At 2:30 p.m. the Straddle Call Session in silver commences. The opening of trading for this session begins with the sounding of a buzzer from the pulpit of the silver pit.[8] A Comex employee (the "caller"), located in the pulpit, calls the spreads one at a time beginning with the near future, and announces every possible spread combination for that future.[9] For example, where the May 1980 future is the next expiring futures contract (the "near" future), the caller would announce May-July, May-September, etc., until he had called the spread of the May 1980 contract with every other silver contract through the most distant listed future.

After calling each spread combination, the caller will pause and survey the group of traders standing in the pit to see if any of these traders has orders to execute.[10] Any trader with an order raises his hand, and, upon being recognized by the caller, announces the quantity that he wishes to buy or sell.

Members may enter either "market"[11] or "limit"[12] orders for spread transactions to be executed during the Session. All orders are considered market orders unless otherwise noted. When a limit order is entered, the member will announce the desired differential when he offers or bids for the spread.[13] For example, he will state "buy 25 at 400," meaning buy 25 spreads at a differential per spread of no more than 400 points (four cents) or $200.00 ($.04 per ounce times 5,000 ounces per spread).[14] Limit orders which are not accepted are withdrawn and not recorded. Acceptance of the limit order by another member will result in an execution. Further, the differential of such an execution generally will provide an indication of a reasonable market price for that spread, and for this reason the differential that is applied to market orders that are subsequently matched by the caller for that particular spread typically is identical.

The caller lists in a record kept in the pulpit all market orders to buy and sell the indicated spread. The caller then totals and offsets, to the extent possible, all buy and sell orders. Thereafter, he announces to the floor the number of excess market orders to buy or sell and permits members in the ring to bid or offer for these excess orders. The differential thus established by the bidding or offering for the excess number of orders will be the differential applied to those orders that were offset. For example, if the caller records 50 buys and 75 sells for the December-January silver spread, the differential of the 50 orders that were offset will be the differential established by brokers who bid to buy the 25 excess orders offered to the floor. The differential established by this procedure, or that which is arrived at as the result of the execution of a limit order, as discussed above, generally will vary by ten to twenty points from the difference between the settlement prices of the two applicable months. Moreover, it is not uncommon

---

Footnotes continued from last page approval all bylaws, rules, regulations, and resolutions made or issued by such contract market, or by the governing board thereof or any committee thereof which relate to terms and conditions in contrasts of sale to be executed on or subject to the rules of such contract market or relate to other trading requirements except those relating to the setting of levels of margin. The Commission shall approve, within thirty days of their receipt (or within sixy days of their receipt if the Commission determines them to be of major economic significance) unless the Commission notifies the contract market of its inability to make such determination within such period of time, such bylaws, rules, regulations, and resolutions upon a determination that such bylaws, rules, regulations, and resolutions are not in violation of the provisions of this Act or the regulations of the Commission and thereafter the Commission shall disapprove, after appropriate notice and opportunity for hearing, any bylaw, rule, regulation, or resolution which the Commission finds at any time is in violation of the provisions of this Act or the regulations of the Commission.

[5] The Exchange was designated as a contract market to trade gold, silver and copper futures on July 18, 1975. As a part of the designation process, the Exchange was required to submit the contents of its rulebook for section 5a(12) approval. The rules which are the subject of this proceeding have not yet been approved under section 5a(12) of the Act, but are currently being enforced under Commission regulation 1.53 and, as such, may be enforced only as they appeared as of July 18, 1975. Since that date, however rule 502 and silver rule 1(b) have been the subject of one minor amendment (changing the specified regular hours of trading), which was accepted by the Commission under regulation 1.41(c) as operational and administrative. The proceeding initiated here is designed to complete the Commission's review of these rules under section 5a(12) of the Act.

[6] In initiating this proceeding, the Commission, in addition, has considered a "summary of Proposed Rules for Straddle Call Sessions", contained in a letter from Mr. Berendt to the Division of Trading and Markets, dated April 5, 1977, and a draft of a proposed rule 4.07 ("Conduct of Straddle Calls"), from Mark Buckstein, counsel to the Exchange, dated February 8, 1979. This summary and draft of a proposed rule 4.07 have not been formally submitted by the Exchange for Commission consideration pursuant to section 5a(12) of the Act. If they were to be submitted by the Exchange for formal consideration under section 5a(12) of the Act in substantially similar form to the draft proposed rule, it does not appear that these changes would remedy the deficiencies which have lead the Commission to initiate this proceeding.

The Commission previously has provided advance notice of proposed rulemaking with respect to procedures for executing spread transactions (43 FR 32092 (July 24, 1978)). While this proceeding relates to some of the same concerns which prompted the Commission's earlier notice, this disapproval proceeding is independent of that rulemaking process.

[7] While the rules similarly authorize a Session in gold, none has ever been held

[8] Trading on the Exchange is conducted in a specially constructed area on the trading floor known as a ring. The pulpit is a raised area in the ring in which an Exchange employee, here the caller, stands to conduct and monitor trading activity.

[9] A spread of straddle is defined herein as the simultaneous sale of one futures delivery month against the purchase of another futures delivery month of the same commodity.

[10] Any member of the Exchange with full trading privileges is permitted in the pit for the Session.

[11] A spread market order is an order to buy or sell a spread transaction at whatever price differential is obtainable at the time the order is presented in the ring or pit.

[12] A spread limit order is a spread order in which the person placing the order sets a limit on the price differential which he will pay for his spread order. The order can be executed only if a differential equal to or better than that set as the limit can be obtained in the market.

[13] Ten points (one-tenth of one cent) is the minimum price fluctuation permitted between transactions in the Comex silver contract, and is the equivalent of $5 per spread.

[14] A trader "buys" a spread when he buys contracts of the deferred month and sells contracts of the nearby month. A trader "sells" a spread when he sells contracts of the deferred month and buys contracts of the nearby month.

for only one bid or offer to be made by the members in the ring for the excess orders. For example, if the settlement prices of the respective legs of the spread were 1267.00/1312.00, a 4500-point difference, it would not be unusual for the floor to offer the spread at 4510 points or bid for it at 4490.

In some instances, a member may bid or offer at 20 or more points away from the apparent spread difference. If the member fails in his bid or offer to execute the spread because another trader bids higher or offers lower, the member is not permitted to participate in the allocation of the excess orders at the resultant differential.

After a differential is established through one of the above procedures, the caller will announce it to the members in the ring. If there are not enough excess orders to meet demand from members who bid or offer for them, the caller will allocate on a proportional basis the available orders among the members in the ring.

Exchange Justification of Special Straddle Session

In its correspondence with the Commission, the Exchange has raised two primary arguments in support of the Session. First, the Exchange states that the Straddle Call Session concentrates spread executions in a segregated time period, thus enabling members to give spread trading their complete attention. The Exchange contends that this procedure results in better executions than could be obtained during the regular trading session.[15]

Second, the Exchange states that commercial accounts often will hedge a position in a distant month by taking a position in an active month and then use a straddle to shift to the desired month ("rolling over a hedge"). This practice occurs because commercial accounts attempting to establish large positions are often unable to hedge in the forward, thinly traded months without affecting price. The Exchange states that the Straddle Call Session enables hedgers to switch into the desired months on the same day as outright positions are assumed, thus eliminating the risk of a change in the differential before the switch might otherwise be affected.

For the reasons discussed below, the Commission is not satisfied that the Comex assertions justify approval of the subject rules under section 5a(12) of the Act.

Possible Grounds for Commission Disapproval of the Comex Rules

The Commission is considering whether to disapprove rule 502, silver rule 1(b), and gold rule 1(b) of the Exchange, pursuant to section 5a(12) of the Act. Upon the following grounds. The Commission is seeking public comment on the rules and the possible grounds for disapproval specified in this notice.[16]

Sections 5 and 6 of the Act, Regulation 1.50

Section 5 of the Act [17] sets forth in broad terms the test for designation as a contract market, including a requirement that the board of trade seeking designation demonstrate that transactions for future delivery in the commodity for which designation is being sought will not be contrary to the public interest. Section 6 of the Act [18] requires any board of trade seeking designation to provide the Commission with "a sufficient assurance" that it will continue to comply with the requirements of sections 5 and 5a, among other provisions of the Act. Moreover, the Act mandates continuing compliance with these requirements as well as with applicable Commission regulations.[19] In particular, Commission regulation 1.50 [20] requires a board of trade, after designation as a contract market, to file with the Commission, upon request, a written report demonstrating the contract market's continued compliance with the requirements, *inter alia*, of sections 5 and 5a of the Act. Commission Guideline I [21] sets forth the particular showings an exchange must make to justify its initial and continued designation, consistent with section 5 [22] of the Act. For example, it is necessary for the contract market to meet the test of "economic purpose." Thus, the board of trade must provide evidence that: [23]

1. The prices involved in transactions for future delivery in the commodity for which such designation is sought are, or reasonably can be expected to be, generally quoted and disseminated as a basis for determining prices to producers, merchants, or consumers of such commodity or the products or byproducts thereof, or

2. Such transactions are, or reasonably can be expected to be, utilized by producers, merchants, or consumers engaged in handling such commodity (including the products, byproducts or source commodity thereof) in interstate (including foreign) commerce as a means of hedging themselves against possible loss through fluctuations in price.

The Straddle Call Session aspect of the Comex silver futures contract does not appear to meet these tests.

First, the Straddle Call Session detracts from the essential market function of price discovery, since spreads that otherwise might be executed during the regular trading day are traded in the Straddle Call Session. This diversion of transactions from the regular trading session detracts from the liquidity and competitive nature of that session and thus diminishes its value as a basis for discovering prices.

Second, the differentials determined by trading during the Straddle Call Session in silver bear a close relationship to daily settlement prices. Because of this close relationship and the lack of additional information provided by these prices, these differentials are not disseminated to the public nor do they appear to be used as reference points for pricing by producers, merchants or consumers.[24] While the Commission staff, prior to recommending that the Exchange be designated to trade silver, found that the Exchange's daily settlement prices were disseminated widely and used as a reference point for pricing by producers, merchants and consumers,[25] there is no apparent expectation that the prices established in the Straddle Call Session will serve producers, merchants or

[15] The Exchange's use of a Straddle Call Session after regular trading hours is unique in the commodity futures industry, although silver futures are not the most actively traded futures contract and, indeed, were not as actively traded on the Comex itself as contracts in 100 ounce gold during 1979. Given the other possible grounds for disapproval of the Session as discussed herein, the Commission is interested in receiving comments which address the particular need for a Straddle Call Session in silver as opposed ot the lack of such a session in other contracts and which discuss how any factors which relate to that need may respond to the possible grounds which the Commission has cited for disapproval.

[16] The Commission will consider the Exchange's submission to date, as well as any response which the Exchange or any other person submits in response to this notice and opportunity for hearing, in determining as a final matter whether to approve or disapprove the subject Exchange rules.

[17] 7 U.S.C. 7 (1976).

[18] 7 U.S.C. 8 (1976).

[19] *See e.g.*, section 6b of the Act, 7 U.S.C. 13a (1976).

[20] 17 CFR 1.50 (1979).

[21] *See* 40 FR 25849 (June 19, 1975). *See also* CCH Comm. Fut. L. Rep. ¶6145.

[22] When Congress added section 5 to the Act in 1974, the House and Senate Conferees stated that the language in section 5(g) included the concept of an "economic purpose" test as provided in H.R. 13113, subject to the final test of the public interest. S. Rep. No. 1194, 93d Cong., 2d Sess. 36 (1974). Guideline I is derived from the "economic purpose" test provided in H.R. 13113. *See* H.R. 13113, 93d Cong., 2d Sess. Section 207 (April 22, 1974).

[23] *See* Guideline 1 appearing at 40 FR 25849 (June 19, 1975) and CCH Comm. Fut. L. Rep. ¶6145.

[24] The close relationship of the Straddle Call Session differentials to the daily settlement prices may well be a further indication that those differentials are not being determined in a competitive manner.

[25] *See, e.g.*, the memorandum to the Commission dated July 10, 1975, from Anthony M. McDonald, Jr., Acting Deputy Executive Director, recommending approval of Comex as a contract market for the trading of silver.

consumers as a basis for determining pries.

Third, the Comex has not demonstrated that the opportunity to execute transactions during the Straddle Call Session is, or reasonably can be expected to be, necessary for producers, merchants or consumers as a means of hedging against price fluctuations. In particular, the Comex has not demonstrated that the Straddle Call Session performs, or reasonably can be expected to perform, this function in a manner which is not or cannot effectively be performed by the regular trading session.

Regulation 1.38

Commission regulation 1.38[26] provides in pertinent part that:

[a]ll purchases and sales of any commodity for future delivery on or subject to the rules of a contract market shall be executed openly and competitively by open outcry or posting of bids and offers or by other equally open and competitive methods, in the trading pit or ring or similar place provided by the contract market, during the regular hours prescribed by the contract market for trading in such commodity * * *

The conduct of the Comex Straddle Call Session appears to violate the concept of competitive trading embodied in regulation 1.38 and does not appear to meet the standard of open and competitive trading which, consistent with section 4b of the Act,[27] that regulation was designed to assure.[28]

First, orders are filled not by buyer and seller meeting in the ring but rather through the intervention of an Exchange official who first records all bids and offers and then matches buy orders with sell orders. The price differential for the spread orders that are offset and matched is determined not on a transaction by transaction basis, but rather on the basis of the price differential established by the bidding or offering for those orders left unfilled by the matching process.[29]

Second, in cases where the number of buy orders exceeds the number of sell orders or the sell orders exceed the number of buy orders, an Exchange employee will allocate the excess orders rather than permit members to compete for these orders.[30]

Third, trading during the Session does not appear to meet the regulation 1.38 standard that transactions be executed "during the regular trading hours prescribed by the contract market for trading in such commodity." The Session begins after the close of the regular trading session and after settlement prices derived from activity during that session have been established for the day. Further, unlike procedures applicable to the regular trading session, participants in the Straddle Call Session are permitted to execute only spread trades, and are prohibited from engaging in all other manner of trading which is recognized as permissible during the regular trading session.

Section 15 of the Act

Section 15 of the Act [31] provides that:

[t]he Commission shall take into consideration the public interest to be protected by the antitrust laws and endeavor to take the least anticompetitive means of achieving the objectives of this Act, as well as the policies and purposes of this Act, in issuing any order or adopting any Commission rule or regulation or in requiring or approving any bylaw, rule or regulation of a contract market or registered futures association established pursuant to section 17 of this Act.

The Comex rules at issue here appear to have substantial anticompetitive charateristics and, thus, approval of these rules may be inconsistent with the Commission's obligations under section 15. Of course, an anitcompetitive practice may not be inconsistent with section 15 if there is a counterbalancing public benefit to be realized in retaining the practice. The Commission believes that the additional trading session does not further the public interest as recognized by the Act and that the anticompetitive aspects of the Session clearly outweigh any benefits which the public interest might derive from the Session.[32] Thus, it appears that the public interest may best be served by elimination of the Straddle Call Session.

In particular, trading during the Straddle Call Session detracts from the ability of the regular trading session to operate in a competitive manner, as discussed above with respect to section 5 of the Act and Commission Guideline I. Spreads which might otherwise be executed during the regular trading session are traded in the Straddle Call Session, thus depriving the regular trading session of additional liquidity which would result from the execution of these spread transactions. The loss of liquidity may impair the effectiveness

[26] 17 CFR 1.38 (1979).

[27] 7 U.S.C. 6b. Section 4b of the Act, among other things, provides that: "Nothing in this section or any other section of this Act shall be construed to prevent a futures commission merchant or floor broker who shall have in hand, simultaneously, buying and selling orders at the market for different principals for a like quantity of a commodity for future delivery in the same month, from executing such buying and selling orders at the market price: *Provided*, That any such execution shall take place on the floor of the exchange where such orders are to be executed at public outcry across the ring and shall be duly reported, recorded, and cleared in the same manner as other orders executed on such exchange."

[28] Regulation 1.38, by its terms provides that "[t]his requirement shall not apply to such transactions as are executed noncompetitively in accordance with written rules of the contract market which have been approved by the Commission, specifically providing for the noncompetitive execution of such transactions." The Commission requests that any commentators who acknowledge that transactions during the Comex Straddle Call Session are executed in a non-competitive manner also address themselves to the issue of whether there is justification, nonetheless, for the Commission to approve the rules implementing the Session as allowed by regulation 1.38.

[29] The Commission understands that on those occasions where there is an equal number of buy and sell orders for a particular spread, the Exchange caller advises the members participating in the Straddle Call Session of that fact and that, as a general matter, absent the acceptance of any limit orders, the differentials for the matched spread orders are set at the differentials obtained by taking the difference between the daily settlement prices established for the respective contract months of the spread.

[30] With respect to both the order matching and allocation procedures, the Commission notes that section 4c(a)(C) of the Act, 7 U.S.C. 6c(a)(C), declares it to be unlawful for any person to enter into or confirm the execution of any transaction "if such transaction is used to cause any price to be reported, registered, or recorded which is not true and bona fide price." Since the Session facilitates the establishment of prices by non-competitive means, it leads to prices which may be viewed as not "true and bona fide." The rules of the Comex plainly operate to permit traders to establish non-bona fide prices in apparent violation of the spirit of section 4c(a)(C), and the intent of Congress in declaring establishment of non-bona fide prices to be unlawful.

[31] 7 U.S.C. 19 (1976).

[32] The public interest objectives which Congress cited as necessitating federal regulation of the commodity futures markets are set forth in section 3 of the Act, 7 U.S.C. 5 (1976). Section 3 provides as follows:

Transactions in commodities involving the sale thereof for future delivery as commonly conducted on boards of trade and known as "futures" are affected with a national public interest; that such transactions are carried on in large volume by the public generally and by persons engaged in the business of buying and selling commodities and the products and byproducts therof in interstate commerce; that the prices involved in such transactions are generally quoted and disseminated throughout the United States and in foreign countries as a basis for determining the prices to the producer and the consumer of commodities and the products and byproducts thereof and to facilitate the movements thereof in interstate commerce; that such transactions are utilized by shippers, dealers, millers, and others engaged in handling commodities and the products and byproducts thereof in interstate commerce as a means of hedging themselves against possible loss through fluctuations in price; that the transactions and prices of commodities on such board of trade are susceptible to speculation, manipulation, and control, and sudden or unreasonable fluctuations in the prices therof frequently occur as a result of such speculation, manipulation, or control, which are detrimental to the producer or the consumer and the persons handling commodities and the products and byproducts thereof in interstate commerce, and that such fluctuations in prices are an obstruction to and a burden upon interstate commerce in commodities and the products and byproducts thereof and render regulation imperative for the protection of such commerce and the national public interest therein.

and efficiency of the price discovery process and the ability of the market accurately to reflect forces of supply and demand as contemplated by section 3 of the Act. Moreover, Comex has not demonstrated that activity during the regular trading session is so intense that it necessitates a separate session during which members may devote undivided attention to executing spreads.

In addition, the procedures of the Comex Straddle Call Session are anticompetitive and do not appear to furnish any counterbalancing public benefit. Orders are not filled by buyer and seller meeting in the ring, but by an Exchange official who matches buy orders with sell orders and fills them, as described above, at prices the same as, or apparently related to the daily settlement prices. Thus, price differentials are not determined on a transaction by transaction basis, but rather on the basis of the price differentials established by the bidding or offering for those orders left unfilled by the matching processes. Finally, in cases where the number of buy (sell) orders exceeds the number of sell (buy) orders, an Exchange employee will allocate the excess orders rather than permit members to engage in competitive bidding or offering for those excess orders.

Further, the existence of the Straddle Call Session operates in a discriminataory and anticompetitive manner by providing an additional opportunity for members to execute spread transactions while prohibiting the execution of outright trades during the same time period. Members who trade spreads obtain the advantage of an additional trading session which is conducted later in the day, after settlement prices are established and available, and after additional material market information may become known.

Finally, the Session procedure puts the public customer at a competitive disadvantage over the floor broker/trader in that settlement prices are established by a committee of floor brokers/traders at the close of regular trading. A floor broker/trader has an opportunity to act upon these prices during the Session. A public customer, however, in effect does not have a comparable opportunity since notice of the settlement prices is available only minutes before the Session begins. Absent a fair opportunity to receive, consider and act upon those settlement prices, customers are in a less favorable position to participate in the Session than members on the floor.

Accordingly, the Commission does not believe that the Comex has demonstrated the necessity for, or appropriateness of, conducting a Straddle Call Session or, if conducted, limiting the Session to spread trading. Further, the Commission does not believe that the Comex has demonstrated that the Session compensates for its anticompetitive effects by providing any countervailing benefits to the public or other traders or by otherwise furthering the public interest generally.

* * * * *

In view of the foregoing, the Commission hereby gives notice of its intention to consider disapproval, pursuant to section 5a(12) of the Act, of rule 502, silver rule 1(b), and gold rule 1(b) of the Comex.[33] Any person interested in submitting written data, views or arguments on this matter should submit such comments by August 29, 1980 to Ms. Jane K. Stuckey, Secretariat, Commodity Futures Trading Commission, 2033 K Street, N.W., Washington, D.C. 20581.

Issued in Washington, D.C., on June 24, 1980, by the Commission.

Jean A. Webb,

Deputy Secretary of the Commission.

[FR Doc. 80-19525 Filed 6-27-80; 8:45 am]

BILLING CODE 6351-01-M

[33] Under section 5a(12), the Commission may disapprove a contract market rule "after appropriate notice and opportunity for hearing." It is the view of the Commission that actions under section 5a(12) of the Act are to be guided by the procedural requirements for informal notice and comment rulemaking. *See* 5 U.S.C. § 553.

The Supreme Court has held that the adjudicatory or formal rule making procedures of the Administrative Procedure Act need be followed "only where the agency statute, in addtion to providing a hearing, prescribes explicitly that it be 'on the record.' " *United States* v. *Allegheny-Ludlum Steel Corp.*, 406 U.S. 742, 757 (1972), quoting from *Siegel* v. *Atomic Energy Commission*, 400 F.2d 778, 785 (D.C. Cir. 1968). *See United States* v. *Florida East Coast Railway Co.*, 410 U.S. 224, 237–38 (1973). *See* also 5 U.S.C. § 554. Since section 5a(12) does not provide for a hearing "on the record," it does not appear that Congress intended to require the Commission to use adjudicatory procedures when it acted under this section.

COUNCIL ON ENVIRONMENTAL QUALITY

Toxic Substances Strategy Committee Report to the President; Availability of the Final Report to the President by the Toxic Substances Strategy Committee

SUMMARY: The Toxic Substances Strategy Committee (TSSC), an interagency committee established by the Council on Environmental Quality at the direction of the President, has prepared a Report to the President. This report presents the findings, policy considerations, and recommendations reached by TSSC in its deliberations and study which began in October 1977. A draft report was issued for public review and comment on August 16, 1979 (44 FR 48134). The comment period closed on October 15, 1979 (44 FR 54332).

The final report contains seven substantive chapters: Federal Chemical Information Systems, The Treatment of Confidential Information, Research Activities That Support Regulation, Response to Chemical Emergencies, Regulatory Programs and Their Coordination, Cancer and Carcinogens: Prevention Policy, and International Issues. The Executive Summary for the report appears below. A summary of the public comments together with the TSSC response is also included below.

ADDRESS: Requests for the report should be addressed to the Public Information Office (TSSC-Report), Council on Environmental Quality, Executive Office of the President, 722 Jackson Place N.W., Washington, D.C. 20006.

Requests for further information should be directed to: Robert B. Nicholas, Senior Staff Member for Environmental Health and Toxic Substances, Council on Environmental Quality, 722 Jackson Place N.W., Washington, D.C. 20006, Telephone: (202) 395-4980.

Dated: June 25, 1980.

Gus Speth,

Chairman, Council on Environmental Quality. (Chairman, Toxic Substances Strategy Committee).

SUPPLEMENTAL INFORMATION:

Executive Summary

Purpose of the Toxic Substances Strategy Committee and This Report

The vastly increased production and use of chemicals and chemical products since World War II and their pervasiveness in our surroundings have led to growing concern over the effects of some chemicals and chemical uses on human health and the environment. Initially, the federal response was primarily an ad hoc reaction to major incidents or discovery of widespread damage. It is steadily moving toward a more deliberate and comprehensive effort with prevention as the major control strategy. President Carter is committed to prevention, and legislation now provides regulatory tools for reducing or eliminating many of the hazards posed by toxic substances from before commercial production until after disposal.

This comprehensive control effort requires knowledge about the chemicals in commerce, including their mixtures, byproducts, uses, persistence and fate in

the environment, and possible effects of exposure on humans, plants, animals, and ecosystems. Equally important is improvement in ways of minimizing the risks posed by the much smaller number of these substances that are known to be hazardous.

President Carter recognized the extraordinary effort that is required to address toxic substances problems and to respond to the mandates of recent legislation in his Environmental Message of May 23, 1977, when he instructed the Council on Environmental Quality (CEQ) to develop an interagency program to eliminate overlaps and fill gaps in data on toxic chemicals and to coordinate federal research and regulatory activities affecting them.

The Toxic Substances Strategy Committee (TSSC) was formed in response. It includes representatives of all federal departments and agencies with major policy, research, or regulatory responsibilities relating to control of potentially hazardous chemicals. The Committee has evaluated the general adequacy and appropriateness of current federal activities relating to toxic substances, including those of its own member agencies, the Interagency Regulatory Liaison Group (IRLG),[1] the National Toxicology Program, the Interagency Toxic Substances Data Committee, and other interagency groups.

TSSC focused on study areas related to research, data and information, and prevention and control strategies that could be fruitfully addressed by such a group. Other concerns were excluded from consideration as a matter of practicality and in recognition of special considerations peculiar to the excluded subjects. Risk assessment for cancer was given more attention than for other health effects, and regulatory approaches to toxic substances control were given more immediate attention than voluntary or educational measures. Some issues were covered only lightly or were omitted, among them some aspects of waste disposal, of groundwater contamination, and of toxic substances in the food chain, and concerns exclusive to radiation hazards, physical safety hazards, nutrition, and alcohol. Concerns about tobacco and the effects of smoking on smokers and nonsmokers were omitted except for specific references to the synergistic effects of cigarette smoking and exposure to given chemicals and to the significant contribution of smoking to cancer. TSSC recognizes that some of these topics are major public health problems and may be of equal or more importance than some that were addressed. It urges continuing interagency groups to review the selection of topics by TSSC and to consider those requiring further attention.

Following transmittal of this report to the President, the Committee will continue only long enough to initiate planning for individual agencies and interagency groups to implement the recommendations.

The Toxic Substances Problem (Chapter I)

The vast increase in the production and use of chemicals in industrial processes, in agricultural production, in food processing, in drugs for animals and humans, and in cosmetics and other consumer products caused growing concern about the impacts of toxic substances on health and the environment during the 1960s and 1970s.

Most chemicals, chemical mixtures, and chemical products are not known to cause serious harm under safe and normal conditions of use and exposure. Modern society has come to depend upon them for health and safety, scientific and technological achievement, environmental quality, recreation, and many other benefits. But the result of the increase in production is extensive and increasing exposure to chemical substances, including some that produce serious adverse human health and environmental effects and other about which little is known, particularly the long-term effects of low level exposure. This proliferation of chemicals in the environment has also added greatly to the difficulties of evaluating which chemicals have the potential to cause serious harm to health and the environment and of establishing safeguards for their manufacture, use, and disposal.

Human exposure to toxic[2] substances may occur through air, water, and terrestrial pollution; through pesticides, foods and food additives, drugs, cosmetics, consumer products, workplace conditions, waste disposal, and accidents. Perhaps the most serious source of human exposure to toxic chemicals is the workplace. Many workers die each year as a result of physical and chemical hazards at work, but the exact magnitude of the long-term health effects of occupational conditions is unknown. Occupational exposure to carcinogens is believed to be a factor in more than 20 percent of all cases of cancer. An unknown number of persons is at risk because of hazardous chemicals seeping into water supplies from hazardous waste dump sites across the nation and because of many other types of exposure.

Human health effects include cancer, birth defects and other reproductive anomalies, neurological and behavioral disorders, kidney damage, lung and heart disease, acute and chronic skin disease, and actue poisoning. Certain subtle effects, such as on intelligence, may be totally undetected. For example, the immediate effects of high level exposures for a short time include burns, rashes, nausea, loss of eyesight, and fatal poisoning. Prolonged exposure to low doses can cause chronic lung disease (e.g., from coal or cotton dust), heart disease (from exposure to cadmium or carbon monoxide), sterility (from dibromochloropropane (DBCP), and kidney, liver, brain, nerve, or other damage. Exposure to industrial solvents can cause depression, and carbon disulfide is associated with a higher suicide rate among workers than in the general population. Although most chemicals do not cause cancer, exposure to some has been linked to cancer. Some workers exposed to asbestos, even for a short time, have developed a rare cancer of the chest and stomach linings 30–40 years after initial exposure. Vinyl chloride gas is linked to a rare liver cancer, to a brain cancer, and possibly to lung cancer. Diethylstilbestrol (DES), when taken by pregnant women to prevent miscarriage, led to increased risk of vaginal cancer in their daughters and abnormal sexual organs in their sons. Methyl Mercury, formed by the action of bacteria in sediments on mercury metal and on mercuric ions, can cause acute poisoning, deafness, brain damage, and a range of birth defects. A single substance can have several kinds of adverse effects, depending on the route and level of exposure (see Table I–1).

The magnitude of the toxic substances control problem, although not quantifiable with precision, is staggering in view of the number of substances whose risk should be evaluated, the rate of growth in both number and volume of

[1] The IRLG is composed of the Environmental Protection Agency, the Occupational Safety and Health Administration, the Consumer Product Safety Commission, the Food and Drug Administration, and the Food Safety and Quality Service (Department of Agriculture).

[2] "Toxic" is a relative term. The effects of any chemical substances or mixture depend not only on its composition and basic properties but also on dosage, route and conditions of exposure, susceptibility of the organism exposed, and other factors. It is not possible to categorize all chemical substances as "toxic" or nontoxic," although some are more toxic than others during normal conditions of use and exposure, and some are generally innocuous. In this report "toxic substances" is not intended to be a scientifically precise term but to encompass the principal concerns of the federal activities addressed here.

chemicals, the various routes by which humans and the environment are exposed, possible synergistic or combined effects of the substances, and the effects that they cause—acute and chronic, immediate and delayed. Years of research can be required to determine whether a particular substance is hazardous.

More than 43,000 chemical substances are listed by the Environmental Protection Agency (EPA) in its initial inventory of substances that are produced commercially in significant amounts and that are subject to regulation under the Toxic Substances Control Act of 1976 (TSCA). The inventory does not include chemical mixtures and foods, drugs, cosmetics, pesticides, and other substances regulated under authorities other than TSCA.

Consideration of the hazards to be controlled and the conditions of control requires judgments about the nature and acceptability of relative risks and about the costs and benefits of control—judgments that involve health, environmental, social, economic, technological, and legal factors. Many of the relevant factors cannot be estimated with certainty, and often there is no objective and commonly agreed upon method for considering them.

The personnel, equipment, and financial resources that are available both publicly and privately for toxic substances control (including research, testing, monitoring, information exchange, control programs, and response to emergencies) are small in relation to the job to be done. Until recently, nearly everyone—legislators, regulators, scientists, and industry officials—seems to have underestimated the magnitude of the research, data, regulatory, and enforcement tasks involved and the potential economic impacts of regulation versus failure to regulate.

In response to growing concern over toxic substances problems, the Congress has enacted more than two dozen regulatory statutes covering the routes by which certain chemicals or aspects of chemical use can threaten human health and the environment. The laws are administered primarily by six federal regulatory agencies.[3]

The Toxic Substances Strategy Committee has concluded that the basic approach to these laws is sound and generally adequate, although some improvements and additions are needed. Particularly appropriate is the preventive approach. Prevention is the key to controlling many diseases and environmental problems caused by toxic chemicals. For many chemical hazards, direct government regulation of releases or exposures will be required in order to protect human health and the environment adequately. The toxic substances control laws reflect society's conclusion that the unregulated market alone in not likely to provide adequate protection of human health and the environment from the potential hazards of some chemical substances, especially when the hazards are subtle, delayed or chronic.

Another example of emphasis on prevention is embodied in the statutes' precautionary principle, i.e., mandating action to limit exposure to a potentially hazardous substance when evidence of the hazard is strongly suggested but is not completely certain.

Implementation of the laws has been very slow. Measured against need, the number of chemicals risks that have been evaluated and the number of regulatory or other actions taken to reduce hazards are disappointingly small. Part of the difficulty has been lack of resources; part has been lack of effective use and coordination of resources; part has been the number and complexity of the problems under review. For newer programs, such as those under TSCA and the Resource Conservation and Recovery Act (RCRA), start-up time has been lengthy. Budgetary support for federal toxic substances control has recently increased substantially, especially for implementation of TSCA and RCRA. Nonetheless; EPA does not expect to catch up with the backlog of existing hazards for many years, and some new hazardous materials may enter the market and the environment despite the premanufacture screening process established under TSCA and the permitting process of RCRA.

Despite these and other limitations, many problems are being overcome, particularly with regard to interagency coordination. Many steps have recently been taken by individual agencies and interagency groups to increase the information base and to make better use of the disseminate available data, to coordinate the testing of chemicals; to increase the pace and consistency of risk assessment and of regulatory activities, to cooperate actively in chemical emergencies, to exchange information with industry and nonfederal groups, and to pursue international goals for global toxic substances control.

These and other steps taken by federal agencies must be combined with Congressional commitment to agressive implementation of the laws, public understanding of the difficult choices that must be made, and cooperation by industry in order to solve currently identified toxic substances problems and to be prepared to prevent or to meet future ones.

Federal Chemical Information Systems (Chapter II)

Federal toxic substances control could be greatly enhanced by coordinated chemical data systems serving the information needs of all agencies. An integrated network of data systems could provide opportunities to reduce duplication of information-gathering, delay, and some uncertainties in decisionmaking. It would be useful to state and local government, industry, labor, public interest groups, academic institutions, international, organizations, and foreign governments as well as to federal agencies.

An integrated data network does not yet exist. At present, the many federal agencies involved with toxic substances use more than 200 independent data systems, all organized differently, ranging from computer systems to simple manual files. Additional state and private data systems are maintained without being linked to each other or to similar federal systems.

Federal agencies and private entities are also hampered by the lack of common identifiers for chemicals, their uses, and characteristics. Chemicals are identified in different files and publications using chemical structure, various types of chemical nonmenclature or numbering systems, and common or generic names.

Other chemical information needs relate to information-gathering and access to information. It is important for the information-gathering process to be efficient, for the information to be of maximum use to agencies requesting it and to the agencies who may share it, and for the reporting burden on private parties to be as light as possible. An integrated data network should be designed to provide wide and timely access to all users while providing security for information that is protected by policies and laws governing privacy, trade secrets, and confidential data.

Another important information need is assurance of the reliability of physical and chemical data contained in the numerous data systems, especially when the systems are to be linked in a network.

[3] The Consumer Product Safety Commission (CPSC), the Environmental Protection Agency, the Food and Drug Administration (FDA), the Food Safety and Quality Service of the Department of Agriculture (FSQS), the Occupational Safety and Health Administration (OSHA), and the Department of Transportation.

Several interagency groups are addressing these problems. The Interagency Toxic Substances Data Committee, cochaired by the Council on Environmental Quality and EPA, is the major forum for these activities. The Data Committee was formed in February 1978 and is now coordinating development and implementation of a Chemical Substances Information Network (CSIN). The CSIN will be a loosely coupled network of data bases and information sources relating to chemicals, their properties, production, uses, fate and transport in the environment, methods of handling and disposal or recycling, health and environmental effects, and regulations and guidelines affecting them.

Some of the major components of CSIN are expected to be operational this year; the others will be available in 2–5 years. The construction and implementation of CSIN involve many technical, financial, administrative, and policy issues, however, and many decisions have yet to be worked out. CSIN development will be phased, so that the feasibility and effectiveness of components can be verified at each stage. Federal and non-federal user needs will be thoroughly studied and the possible contribution of existing public and private services evaluated. Development and full operation of the entire CSIN is expected to take about 10 years.

TSSC places great importance on the recently established interagency groups and coordination mechanisms relating to chemical information. The interagency groups should continue to identify and meet federal needs and to determine related nonfederal needs. TSSC considers the vigorous development of CSIN by the Interagency Toxic Substances Data Committee crucial and urges that CSIN be given a high priority and be allocated resources by all federal agencies concerned with toxic substances.

The best means for identifying chemical substances unambiguously appears to be assignment of a unique number to each unique chemical structure. All federal research and regulatory agencies concerned with toxic substances should be required to use a uniform chemical identification system in all files and proceedings to the maximum extent feasible, either as the sole identifier or by cross-reference. The Data Committee is studying the feasibility and cost effectiveness of expanded use of a computerized numbering system maintained by the Chemical Abstracts Service (CAS), a division of the American Chemical Society. TSSC urges the Data Committee to complete its evaluation and to initiate the policy and procedural steps necessary to implement a uniform system.

TSSC further recommends that EPA expedite completion of a Chemical Use Classification System and that the Data Committee investigate improved ways of classifying mixtures and of resolving other ambiguities in chemical classification. The Interagency Regulatory Liaison Group should give high priority to creation of a Chemical Regulations and Guidelines System to provide information on federal, state, foreign, and international laws, regulations, guidelines, standards, and judicial decisions affecting particular chemicals. The National Bureau of Standards should increase its leadership role in promoting quality control of physical and chemical data and in taking other steps to promote data reliability.

The Treatment of Confidential Information (Chapter III)

Treatment of trade secrets and confidential commercial or financial information obtained in connection with toxic substances control programs emerged in the mid-1970s as a major policy controversy. The controversy is the product of tension between two opposing interests, both recognized by the Congress.

Regulatory agencies, on the one hand, need to collect, share, and make public much scientific, technical, and economic information in order to make and explain sound control decisions.

On the other hand, the toxic substances laws and some other laws of more general application, such as the Freedom of Information Act and the Federal Criminal Code, recognize that businesses have legitimate interests in keeping certain information secret from competitors. Current federal laws generally provide agencies with the authority to obtain the information needed but because of inconsistencies and gaps do not adequately accommodate the conflict between the public right to know and industry's need to protect valuable trade secrets. Conflicts arise over how far these rights should go. For example, although most environmental and health laws permit public disclosure of confidential information when it is "relevant" in a regulatory proceeding, agencies' policies differ on when, to whom, and under what circumstances data should be disclosed and on what precautions should be taken to prevent unauthorized disclosures. The laws also vary on whether confidential data may be shared with other agencies with toxic substances programs and on whether such data may be disclosed to contractors helping an agency assess a toxic substances problem. Some statutes mandate public disclosure of health and safety data while others prohibit it.

The Toxic Substances Strategy Committee established the Subcommittee on Trade Secrets and Data Confidentiality to examine the effects of federal protection of confidential information on toxic substances regulation. The Subcommittee examined the confidentiality provisions of 14 major toxic substances control statutes, other relevant federal and state laws, and federal agency practices to determine their approaches to four problems: interagency data sharing; sharing of data with contractors; public disclosure of confidential health, safety, and efficacy data; and disclosure of confidential information in administrative proceedings. These four problem areas were selected because solutions would mean an immediate and substantial improvement in the ability of federal agencies to carry out their missions efficiently and cooperatively. A brief summary of the Subcommittee findings and conclusions follow.

1. *Interagency Sharing of Confidential Data.*—Interagency sharing of confidential data will facilitate research and regulatory action, eliminate duplicative reporting requirements, and increase agency access to necessary information.

Despite its desirability, there is little agency sharing of data largely because of statutory prohibitions or inconsistencies. Although some laws are inconsistent and their interpretation is uncertain, TSCA and other recent laws permit interagency sharing of confidential data.

Industry is not generally opposed to necessary interagency sharing, but it is primarily concerned with the increased likelihood of unauthorized disclosures, particularly inadvertent disclosures, when data are transferred between agencies. Strict security provisions, including notice to the data submitters, and adequate, uniform penalties for government employees who willfully and knowingly disclose confidential data to an unauthorized party could allay industry concerns about protecting the confidentiality of shared data. Agency training programs could also help sensitize employees to the importance of maintaining data confidentiality. A related industry concern that confidential data not be shared without good reason appears to be satisfactorily addressed by a

requirement that data transfers be restricted on a need-to-know basis.

TSSC recommends that the Interagency Toxic Substances Data Committee prepare legislation to remove barriers to sharing of confidential data between health and environmental agencies. The legislation should provide for sharing on a need-to-know basis and uniform security procedures to protect data transferred, impose uniform penalties for a knowing and willful unauthorized disclosure of confidential data, and establish transfer procedures which include at least 10 days' notice to the data submitter prior to transfer.

2. *Sharing of Confidential Data with Agency Contractors.*—Use of expert contractors is often the most efficient method by which agencies involved in toxic substances control can gather and analyze data needed to meet their research and regulatory responsibilities. Because of budget constraints, tight statutory or other timetables, the shortage of skilled personnel, or the need for special skills on a noncontinuous basis, agencies frequently lack the in-house resources for obtaining and analyzing data expertly and quickly. Contractors often need access to confidential data to do their work. Most recent laws, e.g., TSCA and the Federal Insecticide, Fungicide, and Rodenticide Act (FIFRA), explicitly provide that confidential data may be shared with a contractor; other laws generally have no similar provision.

The major concern in sharing confidential data with contractors is that the contractor or subcontractor may misuse or disclose the data to an unauthorized person. If confidential data are to be shared with a contractor or subcontractor, it is necessary to ensure that they do not have a conflict of interest. The most obvious conflict occurs when a contractor is or has been employed by a competitor of the data submitter. Prior notice to the data submitter of the name and background of the intended contractor provides an early warning of a potential conflict. The contractor or subcontractor must also have a legitimate need for the data, follow security procedures, keep the data confidential, return the data upon completion of the work, and agree to a provision that allows the contractor to be sued by an affected business if there is an unauthorized use or disclosure.

The Interagency Toxic Substances Data Committee, in consultation with the affected agencies, should prepare legislation permitting sharing of data with contractors and subcontractors. TSCA and FIFRA should be the model for the legislation. It should provide for sharing on a need-to-know basis, contain provisions for eliminating potential conflicts of interest, establish effective penalties to deter unauthorized disclosures, and require adoption of security procedures.

3. *Disclosing Health, Safety, and Efficacy Data.*—Companies regularly submit significant quantities of information to the government, including product composition information, the results of health and safety studies (for premarket review), production data, manufacturing data, and similar information which the company may ordinarily keep confidential and which, in some instances, may have competitive value. Some of these data are especially important to the public at large and may need to be shared more widely than just among agencies and contractors.

TSSC examined the issue of whether confidential health, safety, and efficacy data concerning a chemical substance or product required to be submitted to a toxic substances control agency should routinely be made available to the public.

The public has a strong interest in obtaining information on potentially toxic chemicals in products, in the workplace, and in the environment in order to balance the benefits of exposure to substances against the risks in their own daily lives. This interest favors participating in and reviewing government decisions favors routine disclosure of health, safety, and efficacy data. Routine disclosure of this information could also be of substantial value to the scientific community because it ensures peer review of test methods and data, reduces needless duplication of research, and advances scientific knowledge. Health, safety, and efficacy data can represent a substantial investment and provide a competitive edge to the producer, particularly when the data have been produced to satisfy a premarket clearance requirement. Routine disclosure could also affect a company's competitive position outside the United States. Patent protection is generally not adequate to protect financial interests because data are not patentable. If a company is free, either in the United States or abroad, to use data of a competitor to obtain government approval to market an identical or similar product, or to gain insight into new uses or new products, then the originator of the data might not spend money to develop new products. The extent to which disclosure of confidential data adversely affects innovation is unclear.

There is substantial variation in the statutory treatment of confidential health, safety, and efficacy data. The recent legislative trend, embodied in FIFRA and TSCA, is toward disclosure. FIFRA, for example, requires the submission of confidential data for premarket clearance and makes health, safety, and other data routinely available to the public. (The data submitter is given rights to compensation and the exclusive use of the data for regulatory purposes for 10 years only if another manufacturer seeks to register the same product.)

In looking to a resolution of this tension, TSSC considered three options: no public disclosure of confidential health, safety, and efficacy data; public disclosure only of summaries of confidential health, safety, and efficacy data; routine public disclosure of all confidential health, safety, and efficacy data:

The Subcommittee generally favored public disclosure of data but, because it is too early to evaluate the impact, if any, of the disclosure provisions of TSCA and FIFRA, hestitated to recommend complete disclosure. The Subcommitte wanted, however, to increase *legitimate* public access to data and made the following recommendations to further this goal. The Subcommittee recommended that there be no changes in the statutes permitting disclosure of health, safety, and efficacy data such as TSCA. To increase public access to confidential data when there is presently no statutory authorization, the Subcommittee recommended that agencies operating under statutes that do not permit disclosure of confidential health, safety, and efficacy data in raw form (1) release detailed data summaries and (2) be given statutory authority to release health, safety, and efficacy data in raw form to persons satisfying a public interest standard.

Access to raw data should be made available under appropriate safeguards to selected persons or groups who satisfy a "good cause" public interest standard. Primary emphasis would be on the requester's bona fide need to know coupled with an ability to protect the data. Considerations for determining good cause could include background of the requester—whether there is a conflict of interest; purpose of the request—whether there is a public interest purpose: a question of public health and safety; and need for the data—whether the information contained in the summary is sufficient to allow independent evaluation of the test data.

Legislation should further define the good cause standard and provide that data disclosed on the basis of a public interest standard would not deprive the

data of any legitimate confidential status. To ensure that data so disclosed are not subsequently disclosed in an unauthorized fashion or are otherwise misused, the legislation should require procedures and penalties similar to those recommended for sharing of data with agency contractors, namely, notice to the data submitter, criminal penalties for unauthorized disclosure, and ability to safeguard the data.

Requiring demonstration of good cause could impose substantial barriers to public access to health, safety, and efficacy data. To some extent, the problems could be mitigated by establishing a definition of good cause, either by statute or regulation. A *prima facie* showing by the requester would require the party opposing the release to demonstrate why the requester does not need or is not qualified for access. The statute should provide for the award of costs of any litigation (including reasonable attorney and expert witness fees) to any party when the agency or a court determines such award is appropriate.

TSSC recommends that there be no change in the statutes permitting public disclosure of health, safety, and efficacy data. TSSC also recommends that agencies without authority to release such data provide summaries of the data to the public and that legislation be prepared by the Interagency Toxic Substances Data Committee in consultation with affected agencies to allow public access to confidential data on a good cause-public interest standard. The legislation should include security precautions, sanctions for unauthorized disclosures, notice to the data submitter, and provisions for the costs of litigation.

4. *Disclosing Confidential Information in Administrative Proceedings.*—The extent to which confidential information used in otherwise open administrative adjudications or rulemaking proceedings is disclosed to the parties or the public is generally left to agency discretion. In order to ensure effective public participation in proceedings and to allow full explanation of agency decisions, TSSC recommends that agencies develop uniform policies to provide for disclosure without breaching confidentiality, for example, by releasing sanitized versions of data when possible. Because sanitizing data is not always possible, the Interagency Toxic Substances Data Committee should prepare legislation that provides for disclosures on a good cause-public interest basis in a proceeding and for enforceable sanctions against unauthorized further disclosures.

Research Activities That Support Regulation (Chapter IV)

Virtually all federal programs concerned with the effects of chemical substances on human health and the environment include some research. Toxic substances research, taken broadly, includes testing and monitoring as well as basic and applied research. Obtaining all the data and information needed to understand toxic substances and to select effective methods of reducing or eliminating hazardous effects is a herculean task. It is not yet known how many of the tens of thousands of chemicals in commercial use pose hazards, much less the amounts and the circumstances. Chemical testing is a lengthy and costly process and requires skilled personnel. Information on the transport and fate of toxic substances in the environment, on the nature, degree, and effects of exposure of various population groups, and on effects on the environment is also difficult and costly to obtain.

The information that is available on chemicals whose effects are in question is often fragmentary and incomplete. Only a small portion of the scientific and technical information used in agency decisionmaking today flows from federal research, testing, and monitoring programs. Much of it is generated by industry. Under TSCA and other laws, the manufacturers of chemical substances have primary responsibility for testing them. Federal resources are used to perform or direct testing and related research that is critical to successful regulation:

- To assess hazards about which few data are available anywhere.
- To investigate specific problems for which nonfederal testing is impractical or is not mandated.
- To assess the adequacy and accuracy of industry and other data or to supplement them.
- To develop test methods and protocols for use in both private and government laboratories.

TSSC surveyed federal toxic substances research, testing, and monitoring programs to determine their scope, means of coordination and exchange of information, and methods of evaluation and to identify research areas needing more emphasis or more scientific or technical personnel than they now have. The overall concern was whether research activities adequately support regulatory programs and whether they are well coordinated.

In addition to its own survey, which was led by the National Science Foundation, TSSC reviewed interagency efforts to coordinate research planning, including those of the IRLG, the National Toxicology Program, the Task Force on Environmental Cancer and Heart and Lung Disease, the TSCA Interagency Testing Committee, and the Interagency Task Force on Environmental Data and Monitoring.

TSSC identified 37 federal entities that conduct or support toxic substances-related research, with budget obligations totaling more than $840 million in FY 1977. The research relates to disperson of toxic chemicals in the environment, human exposures and effects, mechanisms of actions, aquatic and terrestrial ecological effects, control technologies, and miscellaneous other subjects.

The agencies face shortages in qualified scientific and technical personnel and in resources to undertake long-term research. Long-term research to evaluate serious issues or hazards usually requires 3–5 years or more. The repeated need to focus available resources on vinyl chloride, PCBs, Kepone, and other urgent toxic chemical problems has compounded the inherent difficulties of identifying and evaluating risks, setting long-term regulatory priorities, and translating them into research efforts.

Other problems include the difficulties of coordinating research planning among the many regulatory and research agencies,the lack of centralized information describing all research projects in progress, and the need to ensure scientific quality.

TSCC recommends that the current high level of commitment to toxic substances research, monitoring, and testing be continued. Five topics should be given increased emphasis within available resources in FY 1982 and subsequent years: toxicology, epidemiology, control technology, ecological effects in terrestrial and other ecosystems, and social and economic impacts of toxic substances and their regulation.

The agencies responsible for toxic substances regulation should develop proposals for building and sharing the scientific and technical capabilities needed to evaluate the quality, completeness, and relevance of information submitted to them for use in regulation. They should also explore the need for additional legislation authority for research or technical activities.

TSSC found no compelling need at this time for an overall toxic substances research coordinating committee. Rather, the IRLG agencies and the National Toxicology Program (NTP) should continue their coordination efforts, and NTP should consider adding

new areas of toxic substances research and testing to its program.

TSSC further recommends that agencies supporting research directly or indirectly related to toxic substances submit timely and complete information on all relevant research projects to the Smithsonian Science Information Exchange or its successor. TSSC urges that all agencies use peer review to improve the scientific quality and merit of toxic substances research and that the IRLG agencies and other agencies cooperate in the use of peer review mechanisms and resources. In order to overcome shortages in scientific and technical personnel in ecological and environmental health areas, TSSC recommends that within 12 months EPA, the National Institute of Environmental Health Sciences, and the National Institute for Occupational Safety and Health develop proposals for a coordinated federal training program and for university-based education programs in environmental health, toxicology, environmental pollution control technology.

Response to Chemical Emergencies (Chapter V)

Spills and other incidents involving discharge of hazardous substances into the environment create serious health and environmental emergencies. Many such spills require an immediate response, for example, the derailment of a railroad car carrying toxic gas which has escaped. Decisions must be made accurately and rapidly on the nature of the problem and how to protect public health and the environment. Other discharges involve the gradual accumulation of toxic substances and, unless abated, become emergencies with the passage of time; an example is the leaching of toxic wastes from hazardous waste disposal sites. Although the exact number of spills is unknown, rough estimates prepared for EPA for all non-oil chemicals projects an average of 2,216 spills in excess of 100 gallons each year from 1978 through 1982. These figures tell only part of the story. The effects of hazardous substances spills on life, property, and the environment can be serious and irreversible.

Responding to an emergency involving a hazardous substance spill is rarely simple. First on the scene are often firemen or policemen who generally do not have the expertise or equipment to assess the situation or contain the material adequately. They or the spiller may inform industry response groups or government agencies, and soon local, state, and federal transportation and environmental officials may arrive. These officials, often with company representatives, must make decisions about how best to protect the public health and the environment: whether to evacuate the area, how to contain the spill, how to clean it up, and where and how to dispose of the material permanently. It is essential for industry and government agencies to have well-developed contingency plans and resources for emergencies.

An effective spill response program has five operational parts: notification of the spill; assessment of the problem; effective containment, cleanup, and disposal, including coordination of responders, available trained personnel, and equipment; contingency funds to pay for cleanup when the spiller cannot or will not; and monitoring of long-term effects. An enforcement, prevention, and public education program is also necessary.

The nation is not currently organized for all such emergencies. The private sector is primarily responsible under law for cleanup of hazardous substances spills and releases. Many large chemical companies and transporters are organized to respond, but many smaller manufacturers and transporters are not. The chemical industry has no response program for when a manufacturer does not respond to an incident, but three trade associations have organized mutual aid and assistance programs. Industry groups also sponsor training for state and local personnel and workshops on an ad hoc basis.

Industry obstacles to a more effective spill response include lack of response capabilities of small manufacturers and transporters, lack of an industrywide response program, lack of agreement between industry and government on cleanup technology and on standards for cleanup and environmental restoration, and lack of coordination between and among federal, state, and local government and industry response.

When industry fails to clean up a spill, the government must take over.

State capabilities vary widely, but most do not have adequate resources, training, and information to deal with complex toxic substances emergencies, and it is state or local officials who are usually first to arrive at the scene of an emergency. In a recent survey, only 29 states had environmental emergency contingency plans, 15 had contingency funds, 10 had adequate equipment, and 12 had authority for cleanup and cost recovery. Effective emergency response would be facilitated by strong state and local capabilities.

On the federal level, EPA and the Coast Guard have the authority and capability to send in expert response teams, track down perpetrators, offer technical assistance, and organize the cleanup for spills of specific hazardous substances which affect navigable waters. There are gaps in the authority for cleanup of other spills and abandoned hazardous waste sites. Many other agencies participate in the federal response by providing technical assistance. Federal efforts to respond to the spills and releases are coordinated under the National Contingency Plan (NCP), but they have been hampered by overlapping authorities, by disputes over what and how substances should be designated hazardous for purposes of extending aid, and by the absence of contingency funds for spills on land. The government does not have adequate funds or mechanisms for providing economic compensation to victims of a spill or for cleanup of abandoned waste sites.

There are some significant gaps in existing federal legislation: there are no provisions for full recovery of costs of government response for all spills; no uniform provisions for spill reporting and government response in all environmental emergencies, regardless of the media involved; no provisions for contingency funds to compensate third parties for economic losses when appropriate; and no provisions mandating contributions to a contingency fund by potential spillers. Other problems and gaps in implementation also exist: overlapping and non-uniform EPA and Department of Transportation (DOT) notification requirements, insufficient mechanisms for linking all repositories of data on toxic substances and for making the data available in the event of a spill, and lack of guidelines for determining the extent of necessary cleanup, restoration, and long-term monitoring.

TSSC established a Subcommittee on Chemical Emergencies to look into these problems. The Subcommittee worked closely with the EPA Task Force on Environmental Emergencies, which was also examining EPA response capability. TSSC found that private and government ability to respond to spills could be improved through better contingency planning, through better response procedures, and through establishment of contingency funds. The TSSC recommendations are as follows:

1. *Contingency planning.* Proposed amendments to the National Contingency Plan should be adopted. The National Response Team, with the support of other agencies, should develop a proposal for expansion of the Plan to cover environmental emergencies on land as well as water. Provisions should be added regarding

followup on environmental and health damages, both acute and chronic, by agencies currently authorized to respond in such instances. TSSC further recommends that EPA and DOT, together with other federal agencies, states, and industry, develop guidelines for state contingency planning and for industry response plans for spills, accidents, and other releases.

2. *Federal response.* TSSC recommends that EPA and DOT regularize and make uniform their requirements for reporting spills; that a single source of timely, accurate, uniform, and complete information on a substance be established for use in emergencies; that EPA, with other agencies, develop a plan for quick assessment of hazardous substances; and that EPA, together with other agencies, state and local governments, and industry, develop standards for cleanup and site restoration in the event of a spill.

3. *Superfund legislation.* TSSC recommends adoption of the Administration's proposed Oil, Hazardous Substances and Hazardous Waste Response, Liability and Compensation Act to provide contingency funds for the federal government to respond to and clean up inactive hazardous waste disposal sites and spills, whether on land or water, and to provide uniform reporting, liability, and penalties and some compensation to victims for economic losses from spills.

4. *Training.* TSSC recommends that within available resources EPA and the Coast Guard should consider combining their training efforts and give a single federal training course to state environmental officials who will direct emergency responses. In addition, EPA and DOT should work with the National Fire Prevention and Control Academy to provide special training to firefighters in the handling of hazardous substances.

5. *Prevention.* TSSC recommends that the Coast Guard, EPA, and the Department of Justice continue their efforts under relevant laws to require cleanup of spills by responsible parties. They should also consider and make recommendations for improving the cost recovery mechanisms authorized by Section 311 of the Clean Water Act. EPA, DOT, and the Small Business Administration should explore the feasibility of establishing tax or other incentives for small companies to improve their emergency response capabilities.

Regulatory Programs and Their Coordination (Chapter VI)

More than two dozen laws, some of them overlapping, grant authority for federal regulation of toxic substances. Not all these laws have been fully implemented, particularly the Toxic Substances Control Act and the Resource Conservation and Recovery Act. Full implementation of these and other laws is essential to control of chemical hazards.

The multiplicity of approach resulting from the variety of statutory requirements has positive aspects. The many laws exist because toxic substances problems differ by media, type of hazard, and exposure situation and therefore require different resources and approaches. But coordination is essential to consistency of regulatory actions, efficient use of public and private resources, and attention to the most significant hazards. Coordination should not be used to delay needed action unnecessarily or to force consistency when it is not appropriate.

Despite the statutes and their authorities, progress has been slow in setting standards and in fulfilling other statutory mandates. Resources are limited compared to the job to be done. Other problems include the need for development and evaluation of a complex information base, the legal and political complexities of the regulatory process, and the startup time for new programs in areas where little action has been taken previously. The regulatory response often seems like a "chemical of the week" approach rather than a planned strategy. Regulation of toxic chemicals will continue to be slow and somewhat ad hoc because of constraints of scientific knowledge, laboratories, personnel, and technical resources and the complexity of social, economic, political, legal, scientific, and technical factors to be considered.

Views differ on how the decisionmaking process should accommodate the interaction of these factors as well as on levels of acceptable risk. Many laws and agency policies regarding toxic chemical regulation require consideration of specific factors, including costs and benefits. Others focus on protecting human health to the extent feasible and do not require cost-benefit analysis. Some agencies use cost-benefit analysis as one of several tools in making decisions; others consider present methods and data bases too limited to do so.

A shortcoming in federal regulation of toxic substances is the failure to impose analytical methods for developing cost-benefit information and for using it, as appropriate, as one of several tools in regulatory decisionmaking. Despite inherent limitations of cost-benefit analysis and the practical difficulties frequently encountered, improved analytical methods will help the agencies select consistent and cost effective ways to reduce risks.

Some benefits of regulation—pain not suffered, lives not lost—are especially difficult to quantify. Another practical difficulty is the handling of evidence that is uncertain but strongly suggests harmful effects. Further, benefits may be underestimated if the total costs of regulating a substance are compared only to the one hazard that is the subject of the particular regulation rather than to the effects of a chemical's entire life cycle.

Costs of regulation are also difficult to estimate. They may be underestimated if possible adverse effects of alternative substances are not anticipated or if the indirect costs associated with disruption to the industry are ignored. More frequently they tend to be overestimated, particularly if long-run adjustments in the economy are not considered—such as those resulting from substituting less risky substances for the one being regulated.

In addition to problems of cost-benefit estimates, available information is inadequate. Participation in the decisionmaking process by a broad spectrum of interest groups and individuals is one way to increase the range of facts and values for consideration. But the participation of some available resources.

The need for expanded public participation is one criticism that is sometimes made of regulatory decisionmaking; another is that the process should be more "scientific." Proponents of the latter approach favor standardization of regulatory phases, the clear separation of facts from value judgments, and the organizational separation of scientists from the policymakers. Although theoretically neat, TSSC does not consider it realistic because of the inseparability of science and policy at every stage of decisionmaking. Nor should the process be considered completely judgmental and unique for each regulatory question: to do so would considerably weaken opportunity for public participation, legislative oversight, and judicial review. Rather, flexibility in the decisionmaking process should be preserved without making artificial distinctions between science and policy. The role of all facts, theories, uncertainties, and value judgments should be made explicit at every stage

and open to public scrutiny and participation.

The regulatory agencies are taking steps to speed the regulatory process and to achieve coordination among programs. Individual agencies are making use of generic policies or regulations, i.e., they are covering similar hazards at once instead of individually. Generic approaches hold promise for simplifying and shortening regulatory proceedings. They need not be inflexible or arbitrary, and agencies are providing for analysis of special considerations, for obtaining exemptions, and for evaluating and updating the policies.

Collectively, the regulatory agencies are cooperating through the Interagency Regulatory Liaison Group in the development of compatible approaches to screening, testing, and risk assessment, in the development of regulatory standards and of compliance enforcement procedures, and in the use of field personnel and facilities. The National Toxicology Program is coordinating many areas of toxic substances research and testing.

Administration initiatives to improve the coordination, clarity, and cost effectiveness of federal regulation include: creation of the Regulatory Council to promote legislative health and safety goals with minimum economic costs and regulatory burden; requirements of Executive Order 12044 for reviewing and revising government regulations; and formation of the Regulatory Analysis Review Group (RARG), which assists in achieving the Executive order mandate through in-depth analysis of regulatory actions with a potential economic impact.

TSSC identified several areas in which legislative authority requires strengthening: uniform liability and compensation for hazardous substances pollution damages (see Chapter V), handlng of trade secrets and confidential data (see Chapter III), cleanup of spills and abandoned waste sites (see Chapter V), public participation funding, and coverage of cosmetics, which is less comprehensive than coverage of food, drugs, pesticides, and many chemical substances under TSCA and other legislation. Needs for other legislative modifications may come ot light during program implementation.

Although information on cosmetic ingredients and their effects is imcomplete, cosmetics may present severe hazards less frequently then other classes of chemical substances and products. Yet because of their widespread use by all groups, any cosmetic hazards are likely to be serious in terms of exposure. A wide range of acute health problems has been related to the use of some cosmetic and fragrance ingredients; recent attention has focused on potential chronic health effects.

The Food and Drug Administration cannot require registration of cosmetic manufacturers or submission of information about product ingredients, the results of any testing (except for color additives), or reports of any adverse reactions of consumer injuries. There is no legislative requirement for premanufacture notification or testing of cosmetic ingredients. FDA can impose a variety of legal sanctions against hazardous cosmetics once they are on the market and the problem is known, but the processes for doing so are slow and/or costly. FDA cannot require this recall of products from the market if manufacturers are unwilling to do so.

Some cosmetic manufacturers participate in voluntary programs established by the Cosmetic, Toiletry and Fragrance Association to provide information to FDA and to review the safety of cosmetic ingredients. Not all manufacturers participate. Without either sufficient information or the authority to compel manufacturers to provide it, the determination of risk by FDA and the ability to take regulatory action are severely limited.

TSSC believes that legislation for strengthened cosmetic regulation should be developed and supported, including authority for FDA to obtain test data and other information from industry, an increased inspection authority for FDA, an end to the coal tar hair dye exemption from the Food, Drug, and Cosmetic Act, and additional resources to carry out these increased FDA responsibilities. These actions should be a significant step toward more complete and uniform protection of public health from chemical hazards. FDA regulatory authority could be further enhanced should experience prove the need and further resources become available.

Recognizing that coordination of toxic substances programs is necessary to make efficient use of available resources, TSSC recommends that the IRLG agencies identify the stages and aspects of the regulatory process for which closer coordination would be desirable and most cost effective in achieving public health and environmental goals in a timely manner. Certain IRLG activities should be expanded: developing regulations for selected chemicals of common interest, defining new research initiatives, developing common approaches to risk assessment, developing compatible testing standards and guidelines, and encouraging interaction among member agencies and their field offices at the national, regional, state, and local levels. Further, if the regulatory agencies are to respond fully to the legislative mandate and to the public health problems posed by toxic chemicals, their resources must receive priority attention during the budget process.

The Regulatory Council is asked to chair an interagency group to improve methods for estimating costs and benefits of regulation and for evaluating them. TSSC also recommends more frequent use of generic approaches to identification and assessment of chemical risks, development of more effective labeling requirements by individual agencies, coordinated labeling practices by the IRLG agencies working with the Department of Transportation, and development of new and improved public participation funding programs as well as support for legislation to strengthen and increase these programs.

Cancers and Carcinogens: Prevention Policy (Chapter VII)

Of the hazard to human health arising from toxic substances, cancer is a leading source of concern. Cancer is the only major cause of death that has continued to rise since 1900. It is now second only to heart disease as a cause of death and is responsible for the loss of 400,000 lives each year. Some of the increase in cancer mortality since 1900 is a function of the greater average age of the U.S. population and the medical progress made against infectious disease. But even after correcting for age, both mortality (death) rates and incidence (new cases) of cancer are increasing.

Many now believe that environmental (nongenetic) factors—life style and work and environmental exposures—are significant in the great majority of cancer cases seen, perhaps 80–90 percent. Cancers appear to be multi-staged, and various environmental factors may affect different stages in the progression to malignancy. Some experts place the proportion of cancers in which smoking is a factor at 20–25 percent. A recent report prepared by the National Cancer Institute and two other agencies estimated that in the next few decades workplace exposures will be responsible for another 20 percent of more of cancer cases. It is extremely difficult to make estimates of this kind, and they are subject to debate.

Since passage of the National Cancer Act in 1971, the nation's cancer policy has emphasized understanding of the biological and biochemical foundations of cancer; better methods of

intervention, diagnosis, and treatment; identification of environmental and genetic causes of cancer; and regulation of environmental exposures to carcinogens.

As federal agencies began to regulate exposure to carcinogens in the past decade in food, in the workplace, in air and water, and in consumer products, there were recurring problems in determining whether a substance may cause cancer, assessing the cancer risk, establishing regulatory priorities, and taking action. Since formation of TSSC two years ago, virtually all aspects of cancer prevention policy have been extensively examined by TSSC, EPA, OSHA, CPSC, the IRLC Risk Assessment Work Group, the Regulatory Council, and others in the course of developing and assessing agency policies and procedures. Publication by the IRLG of *Scientific Bases for Identification of Potential Carcinogens and Estimation of Risk* was an important step in achieving consistent agency policies.

Underlying agency policies and regulatory decisions on potential carcinogens are principles basic to the identification of potential human carcinogens. Though widely accepted in the scientific community and by various rulemaking and adjudicatory bodies, these principles have been the subject of considerable public misunderstanding:

- Properly designed and conducted tests using appropriate animal species (e.g., rats and mice) are accepted as valid ways to identify chemical substances that may cause cancer in humans. In nearly all cases, chemicals that cause cancer in humans have been found to cause cancer in small rodents.
- Established test protocols, which include administration of high doses, sometimes by a route different than the expected human exposure route, are appropriate and scientifically valid methods for identifying potential carcinogens in humans. The intrinsic carcinogenic character of a chemical substance is independent of dose level. High doses simply make this characteristic easier to discern in a test situation. Chemical carcinogens tested by one route usually produce cancers when tested by other routes as well.
- Induction of benign tumors is accepted as an indication of the carcinogenic potential of a substance unless definitive evidence shows the substance incapable of inducing malignant tumors. Some tumors pass through benign stages as they progress to malignancy, and some chemicals may produce benign and malignant tumors.
- Methods do not now exist for determining a safe threshold level of exposure to carcinogens. Uncertainties in the dose-response relationship between specific exposures and cancer risk, unknown factors that influence individual susceptibility to cancer, and unpredictable interactions among cancer-causing agents prevent determination of safe levels for human exposure to a carcinogen. Any exposure, however small, is regarded as an addition to the total carcinogenic risk.
- Methods now available for quantifying the estimated human risks from a given exposure to a potential carcinogen can provide only approximations of the actual risk.

Various proposals have been made to centralize in one agency all federal activities related to identification of carcinogens and assessment of the risks that they pose. This idea has a certain appeal and might seem to offer advantages of efficiency and consistency of approach, but on closer examination TSSC found significant drawbacks and saw no compelling reason for the federal government to attempt central management of risk assessment at this time.

TSSC recommends that the agencies responsible for the regulation of potential carcinogens continue to identify and evaluate ways to streamline their procedures. Agencies should seek to place the burden of proof on proponents of use of or exposure to a substance. The IRLG agencies should seek to adopt a generic policies for carcinogens and establish procedures for taking interim regulatory action prior to the time-consuming process of establishing permanent standards and regulations, wherever possible under law.

TSSC further recommends that the IRLG agencies, the National Cancer Institute, the National Institute of Environmental Health Sciences, and other agencies seek to educate the public about the basic principles which form the basis of their policies and procedures for identifying and regulating carcinogens.

International Issues (Chapter VIII)

Toxic substances control problems affect all nations, both industrialized and developing, in their efforts to protect human health and the environment, although governments differ considerably in their assessments of the problems and their solutions. Especially in view of the new emphasis on prevention, the United States and other industrialized nations share responsibility to provide information and assistance to less developed countries so that they can make sound decisions and perhaps avoid the mistakes made by the industrialized nations. Even countries that may never become chemical producers are often the unwitting recipients of hazardous substances and products exported by countries in which they are banned or are severely restricted. Because of different needs, uses, and perceptions of risks and benefits, a country may elect to receive substances considered hazardous elsewhere, but it needs the information upon which to base its decisions.

The industrialized nations are recognizing the advantages of consulting with each other on toxic substances problems and of developing consistent policies and practices in order to protect human health and the environment most effectively. Because many toxic substances cross national boundaries or affect the global commons, they can be controlled only through concerted international action or similar actions by individual nations.

Many governments are developing or have recently enacted legislation that provides for assessment of the effects of chemicals in commerce at the premarket stage or at the premanufacture stage. These laws have a common objective—the protection of human health and the environment. Nations are concerned that differences in regulatory approaches will strain resources (e.g., if one country does not accept test data from another country) or lead to nontariff barriers to world trade. Absolute uniformity of regulatory approaches among countries is not considered possible or desirable. It is especially important not to lower standards of health and safety in exchange for uniformity. Mutual confidence among nations in each other's control measures is desirable.

Developing international consistency in toxic substances control is not easy. Substantial differences in social, political, economic, cultural, scientific, and technological values and experience lead to substantial differences in interpreting scientific data and considering the risks and benefits of control. Impediments to international exchange of information are even greater than those hindering exchange among domestic agencies.

These difficulties, coupled with the fact that many countries are engaged in developing their own toxic substances controls, may tempt nations to delay international efforts until internal matters stabilize. There are reasons why national and international strategies are being and should be considered simultaneously: to coordinate policy development before implementation of individual national control programs

restricts flexibility to do so, to begin early on many complex issues for which extensive consultations will be required prior to international agreement, and to permit some early agreements to contribute to solutions of other problems in sequence.

TSSC reviewed recent international toxic substances activities and recommends that the United States continue its vigorous support of efforts to achieve consistency among nations in the control of toxic substances to the extent possible without undercutting U.S. legislation mandating public health and environmental protection objectives. Areas that should continue to receive emphasis are good laboratory practices, key terms and definitions, minimum data required to assess new chemicals before they enter international commerce, appropriate tests to develop the data, and a system to ensure the advances in scientific knowledge are incorporated into any testing guidelines. The Chemicals Program of the Organization for Economic Cooperation and Development (OECD) is singled out for particular support. Additional areas for improved international cooperation and information exchange that should be promoted are the identification of potentially dangerous chemicals and the development of related health and safety data; development of methods for assessing risks and benefits; acquisition of technical information on safe production, use, and waste disposal; and development of cooperative responses to chemical crises. The results of these efforts should become the basis for agreement on an international convention on toxic substances control.

Additional TSSC recommendations cover more specific needs: developing improved U.S. policies and procedures for hazardous substances exports and obtaining international agreement on notification between governments of hazardous substances exports and on uniform labeling of hazardous substances in international commerce; facilitating sharing among countries of technical information relating to environmental and human health effects of toxic substances and their safe production, use, and disposal (consistent with policies and laws regarding trade secrets and confidential information); developing international agreement on the use of common or compatible chemical codes; considering international information exchange needs and international aspects of issues relating to the protection of trade secrets and confidential data when developing the domestic Chemical Substances Information Network; obtaining more accurate data on the chemicals in trade that are regulated or proposed for regulation; sharing information and developing consistent criteria for location and methods of land and ocean disposal of hazardous wastes; and implementing the provisions of Executive Order 12114 regarding environmental review of certain major government actions that have effects outside the United States.

Response to Public Comments

This section summarizes the most significant comments received by the Toxic Substances Strategy Committee in response to the request for public comment and the TSSC reaction as reflected in the final report.

Numerous comments were received on the draft report, which was published for public comment on August 16, 1974.[4] On September 19 the comment period was extended until October 15.[5] More than 4,000 copies of the report were sent out for review, most of them upon request.

Many of the changes made in the draft report are not reflected in this summary. Rather, this summary seeks to highlight the most important issues and the TSSC response to them. Numerous editorial changes were also made. The public comments were particularly useful in identifying ideas that needed clarification.

In addition to comments on individual chapters and recommendations, some comments were very general, relating to tone, omissions, or emphasis. The final report explains the selection of topics and acknowledges that not all topics of importance are covered.

Some of the individuals who commented are mentioned by name; they are not necessarily the only ones to comment on a given issue. A file of all public comments is available for inspection at the Council on Environmental Quality, 722 Jackson Place N.W., Washington, D.C., (202) 395-4980.

The Toxic Substances Strategy Committee

Many individuals and groups who commented on the draft report mentioned issues relating to toxic substances that they believed were inadequately covered or had been omitted. The topic most frequently mentioned was cigarette smoking and its relationship to cancer and other public health problems. The introductory section of the report has been revised to explain more fully the exclusion of issues relating only to tobacco and other choices that were made concerning the scope and limitations of the report. TSSC recommends that continuing interagency groups address any issues not fully covered.

The American Industrial Health Council (AIHC) was interested in a mechanism by which the federal government would set and periodically redefine goals and priorities for activities relating to chemical substances. A single centralized mechanism is not consistent with the many statutory and other requirements that define the responsibilities of federal agencies and interagency groups. The final report does discuss how agencies and groups set goals and priorities and describes several mechanisms that are being used to improve interagency coordination.

The Texas Department of Health stressed the importance of identifying agency responsibilities and establishing deadlines for the implementation of TSSC recommendations. The final recommendations have been made more specific on responsibility and the general timetable. Detailed implementation plans will be the responsibility of the individual agency or interagency group. For some recommendations for which Presidential or Congressional action is not required, implementation has already begun. As indicated in the report, TSSC will continue for a short time to participate in decisions concerning implementation.

Chapter I. Background

Public Health and Environmental Concerns

Numerous comments were made on this section, several relating to scope and tone. Many praised the analysis and statement of the problems presented. The Environmental Defense Fund, the National Audubon Society, and others believed that cancer, though important, received relatively too much emphasis and that mutagenic, teratogenic, neurological and other chronic health effects of exposure to toxic chemicals should be addressed. TSSC agrees that all serious health effects of exposure to toxic substances are cause for concern. Although cancer remains one of the major concerns of the report, Chapter I more fully acknowledges other potential chronic effects of exposure to toxic chemicals.

Several industry comments also reflected the opinion that cancer was overemphasized but also that occupational and other chemical

[4] 44 Fed. Reg. 48134.

[5] 44 Fed. Reg. 54332.

exposures were exaggerated as a cause of cancer.

Two statistics in the draft report generated many comments. The first, mistakenly attributed to the National Safety Council, stated that more than 100,000 workers are believed to die each year as a result of physical and chemical hazards at work. Several industry comments noted the difficulties with this estimate, which originated from a 1972 study conducted by the National Institute for Occupational Safety and Health.[6] Because TSSC is unable independently to verify this estimate and because controversy would unnecessarily detract from the substance of the report, the figure was simply deleted. Other information presented in Chapter I and elsewhere in the report indicates the correctness of the basic conclusion that the occupational health problem is both real and substantial.

The second figure, an estimate of the percentage (20–38) of cancers for which occupational exposure is a causal factor, also generated substantial comment. Du Pont stated: "Any disease which is caused by occupational exposures is not to be condoned, but the 3–5 percent figure that such authorities as Dr. John Higginson of the International Agency for Research on Cancer ascribes to the situation is probably closer to the actual figure." In comment on this estimate and others, AIHC stated: "We wish to make clear that these comments on flawed estimates cited in the draft report do not reflect a lack of concern for cancer deaths that may be due to the workplace. Even the 1%–5% (citing Higginson, Wynder and Gori, and Weisburger) of cancer which may be due to occupational exposure is too high. AIHC and all responsible industry leaders have committed themselves to identifying any materials which are contributing to the 1%–5% which may be due to occupational exposure and are taking steps to minimize the hazard these substances pose." The final report concludes that in the next few decades the fraction of cancers "due at least in part to workplace exposure will be 20 percent or more." It more fully explains the problems in developing such estimates in the Appendix to Chapter VII.

Some commenters were concerned about the tone of the report. For example, the Chemical Manufacturers Association (CMA) noted that only limited attention was given to the fact that most chemicals are relatively harmless under safe and normal conditions of use and exposure. "A balanced dicussion requires that something more than a passing deference be accorded to the benefits conferred by chemicals, and the fact that majority of chemicals and their uses are not only harmless but beneficial." Still other comments, including those by the Environmental Defense Fund, expressed concern about potential effects from exposure to chemicals and how little is known about the long-term effects of most chemicals. TSSC does not seek to be unduly alarming but seeks to reflect its concern about exposure to chemicals with potentially serious consequences. The final report discusses the complexities of establishing the specific causes for diseases with potential environmental connections and the lack of knowledge about the effects of numerous chemicals. With acknowledgment of the benefits, the potential consequences from exposure to chemicals continue to receive significant attention.

The Federal Response to Chemical Hazards and Issues in Toxic Substances Control

Most changes in these two sections were made to increase clarity and correct misunderstandings. Several industry commenters believed that the public 2 often equates chemicals with toxic substances. The final report clarifies the point that not all chemicals present environmental or public health hazards. The concern is with controlling certain chemicals and aspects of chemical use that are known to present hazards and with obtaining information about those whose effects are unknown. The title was changed from "The Federal Response to the Toxic Problem" to "The Federal Response to Chemical Hazards" to reflect this intent.

Several industry representatives also criticized the tendency of some to think of toxic substances control in terms of "government versus industry." The final report stresses that all groups must work together to control toxic substances—business, industry, labor, consumer and environmental groups, government, and individual citizens.

Many comments were received on the pace of regulation. Industry representatives tended to believe that the slow pace was justified because of the complexity of the problems being addressed and the need to assess the consequences of regulatory action thoroughly. Environmental groups found the pace unjustified and believed that the slowness should be highlighted as a major problem. In the final report, reasons for slowness other than resource limitations are given.

In response to comments by the AFL–CIO, the Natural Resources Defense Council, and others, the final report places even greater stress on the need for full implementation of existing laws. TSSC did not accept the suggestion by several industry groups that existing laws should be fully implemented before any legislative modifications are proposed, however. Rather, TSSC identified several that are needed now and observed that others may be identified during the course of program implementation. The report also acknowledges that there may be legislative and program deficiencies in addition to those addressed by TSSC. Several commenters offered their views on possible deficiencies. (See the comments on Chapter VI.)

AIHC was troubled by references in this section and Chapter VI to the importance in decisionmaking of uncertain but "suggestive" evidence of a chemical hazard. TSSC stands by its conclusion but changed the wording in the final report to "strongly suggested" (see the comments on Chapter VI).

Chapter II. Federal Chemical Information Systems

Many public comments by individuals, states, industry, and environmental groups stressed the criticality of data to sound decisions on protection of human health and the environment. Of particular interest were matters relating to data access. Almost without exception they strongly support the objectives of the Chemical Substances Information Network (CSIN). Many urged the Interagency Toxic Substances Data Committee and its member agencies to develop and implement CSIN with even more speed and priority than was reflected in the draft. The final report more fully explains the high priority being given to this effort, the encouraging progress that has been made, and the importance of continued and increasing agency participation and resources.

Several industry comments, including those of CMA, emphasized the importance of building upon capabilities of private data systems when feasible and of evaluating the cost effectiveness of one phase of CSIN before proceeding to the next. The final report clarifies the point that CSIN is being developed in stages, with evaluation of each phase, flexibility for change, and consideration of existing public and private capabilities prior to design of components.

Because several industry and environmental groups offered

[6] *The President's Report on Occupational Safety and Health* (1972), available from the U.S. Department of Health, Education, and Welfare.

suggestions or asked questions about CSIN management, a section on administration was added. It describes the role of the Council on Environmental Quality, the Environmental Protection Agency, the National Library of Medicine, other agencies, and the Interagency Toxic Substances Data Committee.

Most of the commenters, especially representatives of state government and industry, mentioned consideration of nonfederal user needs in the development of CSIN. Specific suggestions for involving nonfederal groups were referred to the Public Liaison Subcommittee of the Interagency Toxic Substances Data Committee. Comments on needs were referred to the Data Committee and/or its CSIN Subcommittee. Some of the more detailed comments, such as those of the Natural Resources Defense Council and DuPont, were too specific to be addressed in Chapter II, which is a general summary of activities and issues under consideration by other groups; these comments were referred to the Data Committee. The final report gives greater recognition to the importance of nonfederal needs and specifically instructs the Data Committee and the Interagency Regulatory Liaison Group agencies to give attention to them.

Many industry comments expressed concern about protecting trade secrets and confidential information in a network of data systems. The final report discusses both the domestic and international implications and explains that a subcommittee of the Interagency Toxic Substances Data Committee will develop legislative proposals governing the exchange, disclosure, and protection of data claimed to be confidential, based on Chapter III recommendations. Chapter II also explains that no information will be disclosed through CSIN that could not otherwise be disclosed from individual agency files, because CSIN components will provide for separation of public and confidential data.

Du Pont commented on chemical classification problems not discussed in the draft, for example, problems with commercial grade chemicals and with different physical states of a chemical. These problems are mentioned in the final report, and Recommendation 3 was modified to include the problem of ambiguities in existing classification systems.

Many commenters expressed support for the wider use of Chemical Abstracts Service (CAS) numbers to identify chemicals in federal files. The recommendation in the draft report that CAS numbers be required for use as a uniform identifier was modified, however, to reflect the fact that several practical and cost considerations require further study. The Data Committee is asked to expedite its investigation so that a uniform system can be implemented.

The draft report recommended that the Interagency Toxic Substances Data Committee study the feasibility of a hazard alert system based on monitoring the scientific literature. Several commenters supported the general concept, although their comments differed markedly on what should be monitored for what purpose. The recommendation was deleted in the final report because many issues must be further explored before a specific recommendation can be made; the matter is under consideration by the Interagency Toxic Substances Data Committee.

Chapter III. Treatment of Confidential Information

Almost one-half the responses to the draft commented on Chapter III. Many commented favorably, particularly on the sections promoting uniformity and specificity in agency treatment of confidential data. There was substantial support for many of the recommendations. Some commenters suggested ways to strengthen certain recommendations, others suggested alternative approaches, and others rejected any further disclosure or sharing of confidential data.

Commenters, industry and others, recognized the benefits to be gained from interagency sharing and the need for agency sharing of confidential data with contractors. Although there was wide support for the recommendations, several concerns were raised by the chemical industry, individually and through trade associations. Du Pont, CMA, and others commented that sharing among agencies should be limited to a "need to know"—that is, data should not be transferred unless the transferee has a legitimate reason for obtaining the information. TSSC believes that confidential data should not be transferred casually and that a request should be based upon a legitimate need within the requesting agency's statutory function. The text and recommendations have been modified to clarify this position.

Several commenters who were concerned about unauthorized disclosure of confidential data, particularly inadvertent and negligent disclosure, suggested that criminal penalties extend beyond willful and purposeful disclosure to cover negligent and inadvertent disclosure as well. Some of the same people also suggested that a cause of action against the government be established for an unauthorized disclosure. TSSC declined to recommend extension of criminal penalties because it is believed that they would not add significantly to the protection of confidential data and could unduly inhibit appropriate good faith transfers. The final report more clearly acknowledges these serious and legitimate concerns and recommends additional employee training. Together with strict security procedures, employee training should substantially minimize the risk of unauthorized disclosures. Because civil liability was not studied, the final report recommends that it be evaluated.

Perhaps the most controversial recommendation in Chapter III called for new legislative authority to increase disclosure of health, safety, and efficacy data (Recommendation 8). TSSC generally favors routine and full public disclosure of raw data but deferred recommending such routine release for all agencies because the impacts of laws providing such release could not yet be evaluated. TSSC recommended that nonconfidential summaries of data be made available when agencies do not have authority to release raw data and that new legislative authority be provided for all such agencies to enable them to disclose health, safety, and efficacy data on a good cause-public interest basis. Public interest, labor, and other groups urged a policy of routine release. Typical of the public interest comments were those made by Consumers Union, which disagreed completely with the position articulated in the TSSC report: "[We] feel that the TSSC's recommendation that access to data be contingent upon demonstration of a 'good cause' public interest reason for such access is unacceptable, and if implemented would be a serious setback to public participation in the regulatory process." [Emphasis omitted.]

Some industry comments supported the concept of limited public disclosure; others objected to any public disclosure, but many more expressed concern that a public interest test is too vague and unworkable.

The Eastman Kodak Company supported the TSSC approach in its comments on confidential chemical identities: "If there remains a significant public interest that is in some way unanswered, that concern can still be met without sacrificing confidentiality. For example, the chemical identity could be revealed only to a bona fide scientifically oriented public interest group under conditions that would

prevent disclosure of identity to actual or potential competitors."

The Procter & Gamble comments generally reflect the concerns of others: "This appears to be the single most important recommendation. It is vulnerable to serious challenge, because it fails to answer three key questions:

"A. What standard is objectively applied to determine good faith public representation and to screen for competitive connections of the requesting person?

"B. What mechanism is used to limit subsequent dissemination to the non-good cause members of the public; once made public, can the data be withheld from other persons?

"C. What rights does the owner of the information have to assure fair application of constitutional due process standards to an agency taking of the owner's property without the owner's consent?"

TSSC found these and similar comments helpful in clarifying the statement of issues and the recommendations. Although TSSC believed that some of the concerns were already addressed in the draft, additional material has been added to clarify the text.

In response to these concerns, TSSC has made explicit the three primary criteria for a public interest test: background of the requester—whether there is a conflict of interest; purpose of the request—whether there is a public interest purpose; and need for the data—whether the information contained in the summary is sufficient. TSSC agrees with comments that any standard established for release of data must be objective and specific enough to provide reasonable certainty with respect to the standards for disclosing confidential data and an opportunity for the submitter of the data to object to the agency decision prior to disclosure. Additionally, when data are disclosed, they must be protected from unauthorized disclosures. The section addressing these points have been amplified and these principles have been explicitly recognized. The final report gives some examples of a public interest purpose and recommends that the legislation proposed define the term. Legislation and agency rulemaking would also contain provisions for penalties and security procedures to minimize the possibility of unauthorized disclosure.

The draft expressed concern that a public interest test could prove administratively infeasible if data submitters routinely challenged public interest requests. To diminish this potential problem, TSSC recommended that a rebuttable presumption of disclosure be established and that attorney fees be available under certain circumstances to a prevailing public interest requester. Industry comments on this point generally expressed concern that a presumption would be impossible to rebut and that the presumption, coupled with possible award of attorney fees, would unfairly prejudice the data submitter in defending a valid confidentiality claim. TSSC considered these issues carefully and concluded that a statutory definition of public interest purpose could more fully speak to all concerns. TSSC also decided to modify the provision pertaining to attorney fees. The final report adopts a provision similar to that contained in the Clean Water Act and provides for costs of litigation at the discretion of the agency or the court.

The question of sharing confidential data with States was raised by several States which cited their varying authorities and concern for protection of public health and the environment. The draft report recognized the importance of this questions but did not contain any recommendations pertaining to it. A new recommendation has been added (Number 16) to have the Interagency Toxic Substances Data Committee review this problem and develop recommendations.

Chapter IV. Research Activities That Support Regulation

Relatively few comments were made on this chapter.

Several commenters, among them the American Petroleum Institute, Osmose, Texaco, and the Idaho Department of Health and Welfare, suspected that there is considerable duplication and inefficient use of resources in federal toxic substances research programs as a result of inadequate coordination of the 37 agencies involved. They joined other commenters in recognizing that sound scientific information is critical to regulatory decisionmaking, but they questioned whether federal funds are being used in a cost effective manner. These comments required no revisions to the report because it highlighted coordination as a problem and recommended more efficient use of limited resources and avoidance of duplication.

Phillips Petroleum, the California Department of Health Services, and others commented on the five research areas recommended for further emphasis. In the final report, the description of research needs in toxicology and terrestrial ecology and related recommendations have been expanded.

Discussion of the relative responsibilities of industry and government for testing and research attracted diverse opinions. The Natural Resources Defense Council stated that industry should bear the principal responsibility for generating health and safety data (except in enumerated cases) and that the federal government should spot-check the data for accuracy and impose stiff penalties for falsification of data or failure to submit important information. The Chemical Manufacturers Association found the draft overly critical of industry information and stated that it is in industry's interest to conduct good research that will stand up under public scrutiny in regulatory proceedings. CMA also cited deficiencies in government-sponsored testing. Du Pont agreed with the CMA position, observing that industry research is a valuable resource and is part of the solution to toxic substances problems. The Environmental Defense Fund commented that the report did not fully address the issue of government versus industry testing or recommend specific criteria or solutions (such as third party testing).

TSSC did not address this issue in detail, and therefore the final report does not do so. Factual statements are made concerning the circumstances in which the government sponsors testing, but no judgments were made on the relative quality of that testing or on any formal criteria for determining who should test. Such policies must be based on the objectives, legislative requirements, and public and private resources associated with particular programs. Interagency issues relating to priorities for federal testing are being addressed by the National Toxicology Program.

In response to several industry comments, the final report clarifies the point that increased access to medical records and other data files needed for epidemiology and other research must be consistent with the Privacy Act and similar statutes.

Du Pont supported the recommendation for governmentwide use of the Smithsonian Science Information Exchange (SSIE) for reporting research related to toxic substances and suggested that the government encourage broad voluntary participation in SSIE by nonfederal researchers. TSSC agrees and changed the report accordingly.

Chapter V. Response to Chemical Emergencies

Many comments related to this chapter. There was wide support for many TSSC recommendations, particularly those promoting clarification of roles; integration of federal, State, and industry planning; training; and emergency response. Georgia-Pacific supported the recommendation that the Environmental Protection Agency (EPA) and the Department of Transportation "develop guidelines for State hazardous material spill contingency plans and that the EPA and the Coast Guard jointly develop guidelines for industrial response to spills, accidents and other releases."

Similarly, the Natural Resources Defense Council stated: "NRDC recognizes that the extensive efforts to safeguard the environment and human health may be largely negated, at least locally, by a single large scale spill of a hazardous chemical. The effects of such an incident may persist for years. This indicates the importance of improving the capabilities of government and industry to act swiftly and effectively to control chemical emergencies, and NRDC supports the Committee's recommendations designed to achieve that goal."

Phillips Petroleum, concluded that separate funds for spills and dump sites are appropriate. The final report supports the proposed legislation and explains the reasons for considering dump sites and spills together.

Chapter VI. Regulatory Programs and Their Coordination

Numerous comments addressed cost-benefit analysis. Some industry representatives, such as CMA and AIHC, wanted TSSC to endorse cost-benefit analysis more strongly than it did in the draft—by recommending that all programs be required to use it except when explicitly instructed otherwise by law or by stating that costs of regulation must always be reasonably comparable to benefits. The AFL-CIO and the Environmental Defense Fund (EDF) believed that the draft was too supportive of cost-benefit analysis and that the theoretical and practical problems associated with its use are far greater than those described. The AFL-CIO stated that agencies should not use cost-benefit analysis unless specifically required to do so by law.

TSSC believes that it is impossible to reconcile these opposing views, which are explicitly recognized in the final report. The report acknowledges that some programs are not required to use cost-benefit either because of legislation or interpretation by the court. TSSC recommends improvement of cost-benefit analysis methods so that it can be used as one of several tools in decisionmaking when it is appropriate to do so.

In addition to cost-benefit analysis, questions on the role of "science" and "policy" in the regulatory decisionmaking process were raised. The final report describes the range of views and the TSSC position.

Both industry and environmental groups agreed that all elements of a regulatory decision—including uncertainties and value judgments—should be made explicit in the analysis so that they can be understood and reviewed by the public. Proponents included Du Pont, AIHC, and the Natural Resources Defense Council (NRDC). The final report includes this recommendation.

The final report also reflects TSSC agreement with comments of AIHC and Air Products and Chemicals, Inc., among others, that *whether* to regulate is a valid question to be examined as well as how to regulate.

Consistent with comments by CMA, the report acknowledges that just as industry may be pessimistic about regulatory costs, others may be optimistic about the benefits. Honesty and realism on all sides are desirable, as are improved data sources and methods of analysis.

AIHC and several others noted that the draft did not describe all Administration efforts to improve regulatory analysis. The final report discusses Executive Order 12044 and the related work of the Regulatory Analysis Review Group (RARG). Comments on the RARG process were either strongly critical or supportive. TSSC believes that the stated objectives of the RARG process are sound if carried out in a balanced and timely manner. It is too early to evaluate RARG fully, and the report contains only factual information rather than an evaluation.

Some commenters, especially the AFL-CIO, expressed uneasiness over the Regulatory Council's views on cost-benefit analysis and therefore disapproved the recommendation that the Council be responsible for improving such analysis. The recommendation has been revised so that the Council would chair an interagency group and that there would be public participation.

Several industry groups, including AIHC and the American Petroleum Institute, found the discussion of regulatory priorities inadequate. NRDC identified a critical problem in establishing priorities as the range of opinion on what constitutes an unacceptable risk. The national Audubon Society and EDF thought that the draft touched on priority-setting for carcinogens but that it neglected other serious chronic health effects. The final report was expanded by mentioning some factors used in setting priorities; mentioning individual agency and interagency activities related to improving the priority-setting process, principally for carcinogens; indicating the need for similar activities regarding noncancer chronic health effects; and acknowledging the complexities and disagreements about acceptable risks.

TSSC agrees that noncancer chronic health risks require more attention and is encouraged that agencies are beginning to give them more attention. There had been insufficient progress in scientific understanding and in analysis of policy and legal issues while the draft was being developed to enable TSSC to make specific regulatory recommendations. (See the discussion on limitations on the report and the need for additional study in the Foreword to the report.)

A wide range of interests—individuals, states, industry, and environmental and consumer groups—expressed the belief that duplication, confusion, and overlap exist in the federal government to a larger extent than was reflected in the draft. The final report has been revised somewhat to suggest that where they do exist, they are being or should be corrected. Elimination of duplication has been added as an objective of interagency coordination in Recommendation 1. TSSC realizes that public perception of such problems may be entirely different than perception by an agency or by interagency groups like TSSC. This difference is an additional reason for public participation in regulatory decisionmaking, urged in the report.

In response to observations made by the AFL-CIO and others, the final report includes the warning that coordination is not an end in itself and must not be used to delay meeting program goals.

Discussion of the slowness of regulation was revised to include reasons other than limitations on resources. Numerous comments were made on resources, some saying that the need for resources should be given more emphasis and others saying that the need cannot be shown to exist. The position of TSSC is unchanged, that resources need to be enhanced to achieve full implementation of existing laws but resources are not the only problem.

The final report stresses the need for full implementation of existing laws. The AFL-CIO, NRDC, and others

pointed to the slowness of implementation and the need for full implementation in order to protect human health and the environment. Du Pont observed that even with implementation of all existing laws, some problems would remain and that the report should not oversell what can be accomplished. Because all the chapters of the final report fully discuss the many complexities of toxic substances control, the danger of oversell is minimal.

Several industry commenters, among them El Paso Natural Gas, 3M, and CMA, believe that existing laws should be fully implemented before any new legislation is proposed. TSSC disagrees because the need for some legislative modifications may be identified during program implementation. Some commenters cited the need for legislative and program changes in specific areas not covered in the draft: over-the-counter drugs, consumer hazards, interior air, drinking water, groundwater contamination, and food contamination. The final report explains that TSSC was unable to examine all legislation and programs in detail but was principally concerned with coordination and cross-cutting issues. It acknowledges that there may be legislative and program deficiencies in addition to those addressed by TSSC, which other groups should examine.

The recommendation for expanded federal authority to regulate cosmetics brought forth some brief supporting comments from environmental groups and opposition from some industry representatives. More extensive information was provided by the Technical Information Project (TIP) in support of the need for such legislation and by the Cosmetic, Toiletry and Fragrance Association (CTFA), which opposed it. CTFA took the position that adverse reactions associated with the use of cosmetics are not significant, that present authority of the Food and Drug Administration (FDA) is adequate and is supplemented by sound voluntary industry programs, and that increased federal authority would not be an efficient use of resources. In support of its position, the TIP comments discussed extent of exposure, types of health effects, and examples of FDA inability to act. As a result of these comments and additional investigation, the final report describes industry's voluntary programs but also explains the cosmetic hazards and inadequate federal authorities that led to the recommended legislative change. The report points out that the recommendations are a significant first step and that further modifications based on federal and industry experience could be considered later. The cosmetic issue was moved to the end of the chapter to put it in perspective relative to the broader regulatory issues considered by TSSC.

Environmental groups applauded the call for wider use of generic approaches. Texaco, SRI International, AIHC, and Phillips Petroleum described their problems with generic approaches. TSSC considers them avoidable pitfalls, not inherent in generic approaches. The final report discusses these criticisms of generic approaches and the fact that these problems can and should be avoided. Recommendation 6 was revised accordingly.

Although some companies opposed public participation funding programs, others requested that industry be included. The final report indicates that small companies along with health, environmental, and consumer groups, also experience constraints. The recommendation remains nonspecific on the groups to be included, leaving that question to individual agencies to resolve in a manner most compatible with program objectives.

In response to several individual comments, Recommendation 5 includes expedited action by federal agencies on ingredient labeling and hazard warning in addition to the coordination of labeling by the Interagency Regulatory Liaison Group.

AIHC was disturbed at the reference to the importance in decisionmaking of uncertain but "suggestive" evidence of a chemical hazard. TSSC stands by its conclusion that the use of such information has been mandated by the Congress and the courts but revised the wording to replace "suggestive" with "strongly suggested." A judgment enters the "scientific" process in determining how convincing is the evidence, and the reasons for the judgment should be made explicit.

Chapter VII. Cancer and Carcinogens: Prevention Policy

As the introduction to Chapter VII in the draft report acknowledged, cancer is "a leading cause for concern." The numerous comments on this chapter reflect agreement with this statement and the wide variety of opinion on the important issues raised.

Du Pont, AIHC, and many other industry comments expressed concern that chemicals were overemphasized as a cause of cancer. For example, Air Products and Chemicals stated: "Continued use of the term 'chemical substances' (e.g., p. 11 [of the draft]) tends to implicate manmade synthetic products as a major factor in cancer. This is incorrect, and terms should be modified to indicate clearly that naturally-occurring materials and the products of our chosen life style are principal contributors to cancer." The Environmental Defense Fund, Consumers Union, the National Audubon Society, and others agreed with TSSC that cancer is a major problem and that reduction or elimination of chemical exposures was a responsible means of reducing cancer incidence and mortality. NRDC "fully support[s] the Committee's emphasis on a preventative approach to cancer control."

The draft noted that cancer rates, both incidence and mortality, are rising. This conclusion drew many comments. Some agreed; others, relying on recent statements by the American Cancer Society, believe that rates are declining; others referred to a commencement speech by Dr. Philip Handler, President of the National Academy of Sciences, concluding that rates have remained stable.

Discussion on the causes of cancer and the estimated percentage attributable to occupational exposure also drew many responses. The comments expressed a wide range of opinions on smoking, diet, increased chemical production, naturally occurring substances, life style, and other factors and their effects on the rates and causes of cancer. Many of these comments were detailed and reflected careful thought. The final report discusses more fully the variety of diseases that are cancers; the role and interrelationship of chemicals, smoking, diet, and other factors in causing cancers; and the difficulties in attributing single causes or exposures for cancers. Additionally, a chapter appendix now discusses estimates of cancer incidence, mortality, and potential occupational relationships. As the report acknowledges, cancer is complex and many of the relationships between cause and effect are only vaguely understood. Given such uncertainties, the final report concludes that the present policy of prevention is appropriate.

Several comments were received on methods for identifying potential human carcinogens. The Humane Society's Institute for the Study of Animal Problems suggested that great reliance be placed on *in vitro* testing because of concern for limited financial, animal, and human resources used in cancer detection and because of the time necessary to conduct a bioassay. The NRDC also acknowledged the importance of *in vitro* testing at least for

screening. Most of the commenters who addressed the question of identification generally supported use of animal bioassays. Many opinions were received, however, on bioassay methodologies and the conclusions to be drawn from the tests. For example, Du Pont stated: "TSSC Recommendation 3 discussed the usefulness of animal test results at high dosages by routes different from the expected human route. While we recognize the value of tests at the maximum tolerated doses, we believe that animals tests using very high levels of exposure are only useful for assessing the intrinsic carcinogenic properties of a chemical and are not useful for assesing human risks due to workplace exposures. However, animal tests using exposures and routes of exposures which are likely to be encountered in the workplace are useful for assessing the true human risk which the workplace is likely to present."

Others, including AIHC, Air Products and Chemicals, and CMA, commented on maximum tolerated doses, routes of exposure, negative versus positive results, and benign versus malignant tumors.

Several revisions were made relative to these comments. The final report clarifies the roles of epidemiology, *in vitro* tests, and animal bioassays in identifying potential human carinogens and more fully evaluates the use of animal boiassays and the methods for conducting them. The final report further treats questions of dose-response relationships, risk quantification, and potency, which may not have been given enough attention in the draft. The section on centralization of risk assessment was reorganized and the discussion on the interaction of policy versus science more finely tuned. Many of these scientific and policy issues are subject to uncertainty and to continuing debate and concern. The individual member agencies of TSSC wil continue to keep these important matters under review. Question of incidence and mortality will be addressed in greater detail in the future by the National Cancer Institute and CEQ.

Chapter VIII. International Issues

Environmental and industry commenters felt that the draft over-simplified the question of harmonization in its failure to explain the extent of disagreement among nations, the complexity of international issues, the differences in values, and other philosophical and practical barriers to development of consistent approaches. The industry position, perhaps represented in most detail by CMA, was to advocate the positive benefits of consistency despite these disagreements. CMA sees consistency as essential to avoid putting U.S. industry at a competitive disadvantage with foreign industry. NRDC, on the other hand, warned that too much enthusiasm about consistency may be viewed as endorsement of weakening U.S health and environmental goals in order to harmonize with the less protective views and practices of some other nations.

The final report reflects both concerns. It more fully acknowledges the complexities and differences among nations but emphasizes the importance of working to achieve greater consistency without compromising domestic goals to protect human health and the environment.

Industry comments from CMA, Du Pont, Eastman Kodak, and others addressed the importance of protecting trade secrets and confidential data. In response to these comments, the final report contains an expanded treatment of the problem, acknowledging the significant differences in U.S. and European approaches, the anticipated difficulties in resolving the differences and the interrelationship of domestic and international policy issues. The tone and content of Recommendations 8 and 9 were modified to reflect these concerns. The report now more clearly states that international information exchange efforts will relate to publicly available information and will be consistent with national laws and policies governing confidential information.

Hazardous substances export policy concerned several commenters—some would emphasize the right of individual nations to make their own judgments about what is hazardous; some would ban export of a substance or product banned domestically. The final report futher explains the complexities of hazardous substances export policy and the reasons why an effective U.S. policy is needed while international agreement is being pursued. The specifics of the U.S. policy on notification and other export measures are being developed by an interagency work group on hazardous substances export policy.

CMA and Du Pont mentioned the role of industry in international policy relating to chemicals. A paragraph was added on the role of industry in activities of the Organization for Economic Cooperation and Development through the Business and Industry Advisory Council.

In response to other CMA comments, Recommendation 5 was revised to include the resolution of problems with existing labeling schemes in addition to the development of new ones. In response to another CMA comment, activities of the Food and Agricultural Organization regarding food additives were included.

Du Pont recommended establishment of an international clearinghouse for chemical codes. The Du Pont comments were referred to the Interagency Toxic Substances Data Committee, which is being asked to work on international chemical codes (see Recommendation 7).

[FR Doc. 80-19660 Filed 6-27-80; 8:45 am]
BILLING CODE 3125-01-M

DEPARTMENT OF DEFENSE

Department of the Army

Notice of Intent To Prepare a Draft Environmental Impact Statement for the Proposed Wynoochee Enhancement Fish Hatchery

AGENCY: U.S. Army Corps of Engineers, DoD, Seattle District.

ACTION: Notice of Intent to Prepare a Draft Environmental Impact Statement (EIS) for the Proposed Wynoochee Enhancement Fish Hatchery.

SUMMARY: 1. *Description of Action:* The proposed action is to construct an enhancement fish hatchery downstream of the existing Army Corps of Engineers' dam on the Wynoochee River, near Aberdeen, Washington. The hatchery would utilize a fail-safe, gravity-flow water supply of up to 190 cubic feet per second provided by a pipe directly from the dam or from the tailwater of a proposed powerhouse being considered in a separate study. Utilizing very little energy, the hatchery would produce approximately 450,000 pounds of anadromous salmon and trout annually for release primarily in the Chehalis river system.

2. *Alternatives to the Proposed Action:* Alternatives to the proposed action include no action; development of an enhancement fish hatchery at an alternate site; and natural production methods for fish enhancement such as restoration of natural spawning areas, improvement of water quality, and improvement of minimum water flows.

3. *Environmental Review and Public Involvement:* Coordination with key resource agencies and local interests was initiated by correspondence in January 1980. Continuing coordination is being maintained with the U.S. Fish and Wildlife Service; the National Marine Fisheries Service; the Washington State Departments of Fisheries, Game, and Ecology; the Port of Grays Harbor; and the city of Aberdeen. A study

announcement will be mailed to interested agencies, organizations, industries, and individuals in the near future. A formal public meeting will be held prior to publication of the final EIS.

4. *Significant Issues:* Significant issues to be addressed in the EIS include impacts of the proposed project on minimum flows in the Wynoochee River, on native anadromous and resident fish populations, and on wildlife at the hatchery site due to loss of habitat.

5. *Availability.* The draft EIS for the Wynoochee Hatchery Study is expected to be available in January 1981.

6. *Address.* Information concerning the proposed action and draft EIS can be obtained by contacting: Ms. Karen Northup, Department of the Army, Seattle District, Corps of Engineers, Post Office Box C-3755, Seattle, Washington 98124, Attn: NPSEN-PL-ER, Phone: (206) 764-3624 (FTS 399-3624).

Leon K. Moraski,

Colonel, Corps of Engineers, District Engineer.

[FR Doc. 80-19526 Filed 6-27-80; 8:45 am]

BILLING CODE 3710—GB-M

Department of the Navy

Addition and Deletion of Systems of Records

AGENCY: Department of the Navy (DON).

ACTION: Notification of deletions and addition to systems of records.

SUMMARY: The Department of the Navy proposes to add one new systems notice and delete three systems notices subject to the Privacy Act of 1974. The information contained in the deleted systems will be incorporated into the new system.

DATES: The proposed actions shall be effective without further notice on July 30, 1980, unless comments are received on or before July 30, 1980, which would result in a contrary determination.

ADDRESS: Any comments, including written data, views or arguments concerning the action proposed should be addressed to the system manager identified in the particular systems notice.

FOR FURTHER INFORMATION CONTACT: Mrs. Gwendolyn R. Rhoads, Privacy Act Coordinator, Office of the Chief of Naval Operations (OP-09B1P), Department of the Navy, The Pentagon, Washington, D.C. 20350, telephone: 202-694-2004.

SUPPLEMENTARY INFORMATION: The Navy systems of records notices as prescribed by the Privacy Act of 1974, Title 5 U.S.C., Section 552a (Pub. L. 93-579) have been published in the Federal Register as follows:

FR Doc 79-36400 (44 FR 67703) November 27, 1979.
FR Doc 79-36798 (44 FR 68947) November 30, 1979.
FR Doc 79-37052 (44 FR 74553) December 17, 1979.
FR Doc 80-6599 (45 FR 13794) March 3, 1980.
FR Doc 80-14965 (45 FR 32037) May 15, 1980.
FR Doc 80-15427 (45 FR 33679) May 20, 1980.
FR Doc 80-17286 (45 FR 38099) June 6, 1980.

The Department of the Navy has submitted a new system report dated May 29, 1980 for this new system report under the provisions of 5 U.S.C. 552a(o) as implemented by Office of Management and Budget (OMB) Circular No. 1 and No. 3, dated September 30, 1975 and May 17, 1976, respectively. The OMB guidance was set forth in the Federal Register (40 FR 45877) on October 3, 1975.

M. S. Healy,

OSD Federal Register Liasion Officer, Washington Headquarters Services, Department of Defense.

June 24, 1980.

Deletions

N00018-01

SYSTEM NAME:

Medical Department Training Records System (44 FR 74580) 17 Dec 79.

REASON:

This System has been replaced by a new system N00018-01, "Medical Department Professional/Technical Personnel Development".

N00018-02

SYSTEM NAME:

Bureau of Medicine and Surgery Headquarters Personnel System (44 FR 74581) 17 Dec 79.

REASON:

This system is incorporated with new N00018-01, "Medical Department Professional/Technical Personnel Development".

N00018-09

SYSTEM NAME:

Bureau of Medicine and Surgery Personnel Management Information System (44 FR 74584) 17 Dec 79.

REASON:

This system is incorporated with new N00018-01, "Medical Department Professional/Technical Personnel Development".

N00018-01

SYSTEM NAME:

Medical Department Professional/ Technical Personnel Development

SYSTEM LOCATION:

Bureau of Medicine and Surgery, Navy Department, Washington, D.C. 20372; individual's duty station or reserve unit (mailing addresses are listed in the Navy directory in the appendix to the Component System Notice); Military Sealift Command, Navy Department, Washington, D.C. 20390; National Personnel Records Center, 9700 Page Boulevard, St. Louis, Missouri 63132; National Personnel Records Center, 111 Winnebago Street, St. Louis, Missouri 63118; Bureau of Medicine and Surgery managed education and training activities (mailing addresses are listed in the Navy directory in the appendix to the Component System Notice); various colleges and universities affiliated with BUMED managed education and training activities.

CATEGORIES OF INDIVIDUALS COVERED BY THE SYSTEM:

Navy (military and civilian) health care personnel; applicants to student status in Navy Aerospace Medicine, Navy Aerospace Physiology and Navy Aerospace Experimental Psychology; Navy (military and civilian) personnel qualified as divers or involved in other professional/speciality/technical training; Navy (military and civilian) personnel exposed to occupational/ environmental hazards; distinguished/ noted civilian physicians in capacity of lecturer/consultant.

CATEGORIES OF RECORDS IN THE SYSTEM:

Personal and demographic data; education, training, professional, specialty, and technical accomplishments/qualifications; credentialing programs; surgical and surgical support team personnel listings; assignments history, projected rotation date, projected release from active duty date, active duty obligation, officer preference card, and variable incentive pay/continuation pay selection data; Hospital Corps education and training history with grades received, commanding officer's performance evaluation, and recommendations; periodic and total lifetime accumulated exposure to occupational/ environmental hazards; curricula vitae of civilian consultants.

AUTHORITY FOR MAINTENANCE OF THE SYSTEM:

Title 10, U.S.C.; 5 U.S.C. 301; Title 10, CFR Part 20, Standards for Protection Against Radiation.

ROUTINE USES OF RECORDS MAINTAINED IN THE SYSTEM, INCLUDING CATEGORIES OF USERS AND THE PURPOSES OF SUCH USES:

Military and civilian employees of BUMED and BUMED managed education and training activities in the performance of their official duties related to procurement, assignments, professional/specialty/technical training, credentialing, promotion, and all other aspects of health care personnel management; career development; evaluation of candidates for position of lecturer/consultant; mobilization, planning, and verification of reserve service; surgical team contigency planning; management of physical standards; maintenance of safe occupational/environmental protection standards.

POLICIES AND PRACTICES FOR STORING, RETRIEVING, ACCESSING, RETAINING, AND DISPOSING OF RECORDS IN THE SYSTEM:

STORAGE:

Automated records stored on disc, tape, punched card, and machine listings. Manual records stored in card files and folders in filing cabinets.

RETRIEVABILITY:

Manual records retrieved by full name, SSN, file numbers, program title or locator card. Automated records retrieved by key to any data field.

SAFEGUARDS:

Records maintained in monitored or controlled access rooms or areas; public access to the records is not permitted; computer hardware is located in supervised areas; access is controlled by password or other user code system; utilization reviews ensure that the system is not violated. Access is restricted to personnel having a need for the record in the performance of their duties. Buildings/rooms locked outside regular working hours.

RETENTION AND DISPOSAL:

Medical Department personnel professional development and training records: Headquarters, BUMED records—retained at BUMED for duration of member's service, then retired to NPRC, St. Louis for 10 year retention; BUMED field activities—retained 5 years, then destroyed.

Radiation exposure records: personnel exceeding exposure limits—retained at BUMED 50 years, then destroyed; all others—retained 5 years, then destroyed.

Surgical support team records: Headquarters, BUMED—destroyed upon termination of active duty service; BUMED field activities—destroyed upon termination of duty at the Medical Department facility.

Curricula vitae of lecturers/consultants—destroyed upon termination of status at the Medical Department facility.

SYSTEM MANAGER(S) AND ADDRESS:

Chief, Bureau of Medicine and Surgery, Navy Department, Washington, D.C. 20372; Director, National Personnel Records Center, 9700 Page Boulevard, St. Louis, Missouri 63132; Director, National Personnel Records Center, 111 Winnebago Street, St. Louis, Missouri 63118; commanding officers of naval activities, ships and stations.

NOTIFICATION PROCEDURE:

Offices where requester may visit to obtain information of records pertaining to the individual: Potomac Annex, 23rd and E Street, N.W., Washington, D.C.; Navy medical centers and hospitals; other Navy health care facilities; and BUMED managed education and training facilities.

The individual should present proof of identification such as an I.D. card, drivers license, or other type of identification bearing signature and photograph.

Written requests may be addressed as follows:

Active duty Navy members or civilian employees presently working for the Navy should address requests to the commanding officer of the facility or ship where they are stationed or employed. Mailing addresses are in the Department of Defense directory in the appendix to the Component's Systems Notices.

Former members of the Navy should address requests to Director, National Personnel Records Center, 9700 Page Boulevard, St. Louis, Missouri 63132.

Former civilian employees of the Navy should address requests to Director, National Personnel Records Center, 111 Winnebago Street, St. Louis, Missouri 63118.

All written requests should contain full name, rank, SSN, file number (if any), and designator.

RECORD ACCESS PROCEDURES:

The agency's rules for access to records may be obtained from the systems manager.

CONTESTING RECORD PROCEDURES:

The agency's rules for contesting and appealing initial determinations by the individual concerned may be obtained from the systems manager.

RECORD SOURCE CATEGORIES:

Military Headquarters, offices and commands; educational institutions and training hospitals; boards, colleges and associations of professional licensure and medical specialties; personnel records; information submitted by the individual; automated system interfaces.

SYSTEM EXEMPTED FROM CERTAIN PROVISIONS OF THE ACT:

None.

[FR Doc. 80-19603 Filed 6-27-80; 8:45 am]

BILLING CODE 3810-71-M

Naval Research Advisory Committee; Partially Closed Meeting

Pursuant to the provisions of the Federal Advisory Committee Act (5 U.S.C. App. I (1976)), notice is hereby given that the Naval Research Advisory Committee will meet on July 14–18 and 21–25, 1980, at the Naval Ocean Systems Center, 271 Cataline Blvd., San Diego, California. Sessions of the meeting will commence at 8:00 a.m. and terminate at 5:00 p.m. on all days. All sessions will be closed to the public.

The entire agenda for the meeting will consist of discussions of jamming, jam resistant communication/data links, tactical warning, nuclear effects and other related intelligence. These matters constitute classified information that is specifically authorized under criteria established by Executive order to be kept secret in the interest of national defense and is in fact properly classified pursuant to Executive order. The classified and non-classified matters to be discussed are so inextricably intertwined as to preclude opening any portion of the meeting. Accordingly, the Secretary of the Navy has determined in writing that the public interest requires that all sessions of the meeting be closed to the public because they will be concerned with matters listed in section 552b(c)(1) of title 5, United States Code.

For further information concerning this meeting, contact:

Captain Jesse F. Morris, U.S. Navy, Office of Naval Researh (Code 700), 800 North Quincy Street, Arlington, Virginia 22217, Telephone No. (202) 696-4261.

Dated: June 28, 1980.

P. B. Walker,

Captain, JAGC, U.S. Navy, Deputy Assistant Judge Advocate General (Administrative Law).

[FR Doc. 80-19832 Filed 6-27-80; 1:06 pm]

BILLING CODE 3810-71-M

DEPARTMENT OF EDUCATION

National Advisory Council on Indian Education; Meeting

AGENCY: National Advisory Council on Indian Education.

ACTION: Notice.

SUMMARY: The notice sets forth the schedule and proposed agenda of the forthcoming Full Council Meeting of the National Advisory Council on Indian Education. It also describes the function of the Council. Notice of this meeting is required under the Federal Advisory Committee Act (5 U.S.C. Appendix I, Section 10(a)(2)). This document is intended to notify the general public of their opportunity to attend.

DATES: Full Council Meeting: July 20, 1980, 9:00 a.m. to 5:00 p.m. and July 21, 1980, 9:00 a.m. to 5:00 p.m. and July 22, 1980, 9:00 a.m. to 5:00 p.m.

Committee Meetings: To be announced.

ADDRESS: Imperial 400 Motel, 125 Main Street, Rapid City, South Dakota, 57701.

FOR FURTHER INFORMATION CONTACT: Dr. Micheal P. Doss, Executive Director, National Advisory Council on Indian Education, Suite 326, 425 13th Street, N.W., Washington, D.C., 20004, (202) 376-8882.

The National Advisory Council on Indian Education is established under Section 442 of the Indian Education Act, Title IV of Pub. L. 92-318, (20 U.S.C. 1221g).

The Council is directed to: (1) Submit to the Commissioner of Education a list of nominees for the position of Deputy Commissioner of the Office of Indian Education/OE;

(2) Advise the Commissioner of Education with respect to the administration (including the development of regulations and of administrative practices and policies) of any program in which Indian children or adults participate from which they can benefit, including Title III of the Act of September 30, 1950 (Pub. L. 81-874) and Section 810, Title VIII of the Elementary and Secondary Education Act of 1965 (as added by Title IV of Pub. L. 92-318 and amended by Pub. L. 93-380), and with respect to adequate funding thereof;

(3) Review applications for assistance under Title III of the Act of September 30, 1950 (Pub. L. 81-874), Section 810 of Title VIII of the Elementary and Secondary Education Act of 1965 as amended and Section 314 of the Adult Education Act (as added by Title IV of Pub. L. 92-318), and make recommendations to the Commissioner with respect to their approval;

(4) Evaluate programs and projects carried out under any program of the Department of Education in which Indian children or adults can participate or from which they can benefit, and disseminate the results of such evaluations;

(5) Provide technical assistance to local educational agencies and to Indian educational agencies, institutions, and organizations to assist them in improving the education of Indian children;

(6) Assist the Commissioner of Education in developing criteria and regulations for the administration and evaluation of grants made under Section 303(b) of the Act of September 30, 1950 (Pub. L. 81-874) as added by Title IV, Part A, of Pub. L. 92-318;

(7) Submit to the Congress not later than June 30 of each year a report of its activities, which shall include any recommendations it may deem necessary for the improvement of Federal education programs in which Indian children and adults participate; or from which they can benefit, which report shall include a statement of the Council's recommendations to the Commissioner with respect to the funding of any such programs; and

(8) Be consulted by the Commissioner of Education regarding the definition of the term "Indian," as follows: Sec. 453 [Title IV, Pub. L. 92-318]. For this purpose of this title, the term "Indian" means any individual who (1) is a member of a tribe, band, or other organized group of Indians, including those tribes, bands, or groups terminated since 1940 and those recognized now or in the future by the State in which they reside, or who is a descendant, in the first or second degree, of any such member, or (2) is considered by the Secretary of the Interior to be an Indian for any purpose, or (3) is an Eskimo or Aleut or other Alaska Native, or (4) is determined to be an Indian under regulations promulgated by the Commissioner, after consultation with the National Advisory Council on Indian Education which regulations shall further define the term "Indian."

The meeting will be open to the public. This meeting will be held at the Imperial 400 Motel, 125 Main Street, Rapid City, South Dakota, 57701, (605) 343-5435.

The proposed agenda includes: (1) Executive Director's Report, (2) Action on previous meeting minutes, (3) Committee discussions and reports, (4) Review of NACIE FY 1980 Budget, (5) Plans for future NACIE activities, (6) Regular Council Business, (7) Public Testimony.

Records shall be kept of all Council proceedings and shall be available for public inspection at the office of the National Advisory Council on Indian Education located at 425 13th Street, N.W., Suite 326, Washington, D.C. 20004.

Dated: June 24, 1980.

Signed at Washington, D.C.

Dr. Michael P. Doss,

Executive Director, National Advisory Council on Indian Education.

[FR Doc. 80-19490 Filed 6-27-80; 8:45 am]

BILLING CODE 4000-01-M

DEPARTMENT OF ENERGY

Economic Regulatory Administration

[ERA Case Nos. 52879-0646-01-82, and 52879-0646-02-82, 52879-0646-03-82, 52879-0646-04-82]

Tampa Electric Co.; Issuance of Proposed Prohibition Orders Pursuant to Sections 301 and 701 of the Powerplant and Industrial Fuel Use Act of 1978

The Economic Regulatory Administration (ERA) of the Department of Energy (DOE) hereby gives notice pursuant to Section 701(b) of the Powerplant and Industrial Fuel Use Act of 1978 (FUA), 42 U.S.C. 8301 *et seq.*, of the issuance of the following proposed prohibition orders which would prohibit the powerplants named below from burning natural gas or petroleum as their primary energy source.

Proposed Prohibition Orders

Pursuant to the authority granted it be Section 301(b) of FUA, ERA issues these proposed prohibition orders to the following powerplants owned by Tampa Electric Company (TECO).

ERA Number	Generating station	Powerplant number	MW	Location
52879-0646-01-82	Gannon	1	125	Tampa, Florida.
52879-0646-02-82	Gannon	2	125	Tampa, Florida.
52879-0646-03-82	Gannon	3	179	Tampa, Florida.
52879-0646-04-82	Gannon	4	187	Tampa, Florida.

Statement of Basis and Rationale for Proposed Prohibition Orders

ERA has issued regulations applicable to existing facilities, 10 CFR Part 504 (Regulations), to implement the prohibitions contained in Section 301(b) of Title III of FUA. Section 504.5 of the Regulations sets forth the basis upon which ERA will propose to prohibit by order the use of natural gas or petroleum as a primary energy source by a powerplant where ERA finds that the powerplant has or previously had the technical capability to use an alternate fuel as a primary energy source.

TECO has reported to ERA that it estimates the potential oil displacement in converting Gannon Units 1, 2, 3 and 4 to an alternate fuel (coal) is approximately 8,100 barrels of oil per day or 3 million barrels annually assuming an average utilization factor of 48 percent.

Finding of Technical Capability

In accordance with Section 301(b) of Title III of FUA and the Regulations, these proposed orders are based on a finding by ERA that TECO's Gannon Units 1 thru 4 have or previously had the technical capability to use an alternate fuel (coal) as a primary energy source. This finding is based upon ERA's review of FPC Forms 36 and 67 previously submitted by TECO, a May 5, 1980 TECO Position Paper on coal conversion, TECO studies regarding coal conversion and a plant visit to the Gannon plant. The technical capability finding is made in accordance with the requirements of Section 504.5(d) of the Regulations, taking into consideration the ability of the units, from the point of fuel intake, to physically sustain combustion of coal and maintain heat transfer. This finding also recognizes, in accordance with § 504.5(d), that Gannon Units 1, 2, 3 and 4 are capable of burning coal, notwithstanding the fact that minor adjustments must be made to the powerplants before they can burn coal as their primary energy source or that air pollution control equipment may be necessary to meet air quality requirements.

Other Required Findings

Section 301(b) of FUA requires that prior to the issuance of a final prohibition order ERA must also find that (1) the powerplants have the technical capability to use coal or another alternate fuel as a primary energy source, or they could have such capability without (A) substantial modification of the powerplants or (B) substantial reduction in the rated capacity of the powerplants; and (2) it is financially feasible for the company to use coal or another alternate fuel as a primary energy source in such powerplants.

Proposed Prohibition Under Title III of FUA

Subject to the other required findings that ERA must make, ERA hereby proposes to prohibit Tampa Electric Company's Gannon Units 1, 2, 3 and 4 from burning petroleum or natural gas as their primary energy source.

Description of Prohibition Order Proceedings

Pursuant to Section 301 of FUA, ERA has promulgated Regulations applicable to the issuance of prohibition orders to existing facilities, a summary of which follows:

(1) ERA has performed its initial information gathering with respect to the question of technical capability to burn alternate fuels (coal) and has informed TECO that it is considering issuance of the proposed prohibition orders. ERA also has held informal discussions with TECO concerning the issuance of the proposed prohibition orders.

(2) ERA has made a finding that Gannon Units 1, 2, 3 and 4 have or previously had the technical capability of using coal as their primary energy source. ERA is publishing this finding and these proposed prohibition orders in the Federal Register as required by Section 701(b) of FUA. In accordance with Section 301(b) of FUA, the proposed prohibition orders are not required to contain, at this point in the proceeding, the other pertinent findings that ERA must make before final prohibition orders can be issued. These are: (1) that the powerplants have the technical capability to use coal or another alternate fuel as a primary energy source, or they could have such capability without (A) substantial physical modification of the powerplants, or (B) substantial reduction in the rated capacity of the powerplants; and (2) that it is financially feasible for TECO to use coal or another alternate fuel as a primary source in such powerplants.

(3) In accordance with § 501.51(b)(3) of the Regulations, a public comment period of at least three months is to commence after publication of the proposed prohibition orders, during which period TECO will be given an opportunity to challenge ERA's initial finding of technical capability contained in these proposed prohibition orders. During this three month comment period, under § 501.51(b)(3) of the regulations, TECO is required to furnish ERA with such additional evidence as is necessary to enable ERA to make the other statutory findings set forth above, which are required to be made by ERA prior to issuance of final prohibition orders. TECO will also be required, during this period, to identify, but not to demonstrate its entitlement to, any exemptions for which the Gannon Units 1, 2, 3 and 4 may qualify.

(4) Subsequent to the end of the initial three month comment period, ERA will issue a notice of whether ERA intends to proceed with the prohibition orders. Within three months of the issuance of the notice of intention to proceed with the prohibition orders, the owner or operator of the powerplants, that may be subject to an order, may demonstrate prior to issuance of final prohibition orders that the powerplants would qualify for an exemption if the prohibitions had been established by rule.

(5) Subsequent to the end of the second three month period, ERA will, if it intends to issue the final prohibition orders, prepare and publish a noticed of availability of a tentative staff decision.

(6) Under the provisions of Section 701(d) of FUA, any interested person may request a public hearing on the proposed prohibition orders and tentative staff decision. Interested persons wishing a hearing must make their request, in writing, no later than 45 days after publication of the notice of availability of the tentative staff decision. If a hearing is requested, ERA shall provide interested persons with an opportunity to present oral data, views and arguments at a public hearing held in accordance with Subpart C of 10 CFR Part 501.

(7) At the hearing, if any, interested persons will have the opportunity to question the parties about ERA's proposed orders and tentative staff decision, TECO's showing on exemptions and rebuttal of ERA's proposed orders, and ERA's rebuttal to any showing of potential qualification for exemption.

(8) After the hearing, if any, and the second three month comment period, ERA shall determine whether the final prohibition orders will be issued, based upon ERA's review of the entire administrative record. The final prohibition orders, if issued, together with a summary of the basis therefor, will be published in the Federal Register. Such orders shall not take effect earlier than sixty days after publication.

Comment and Public Hearing Procedures

ERA hereby also gives notice of the opportunity to submit written comments, views, and arguments by interested persons regarding these proposed prohibition orders. Comments need not be limited to ERA's technical capability finding, but may include a discussion of all three statutory findings.

The initial comment period shall remain open for a period of three months after publication of these proposed orders in the Federal Register, unless reduced at the request of the recipient of the proposed prohibition orders pursuant to Section 501.51(b) (8) of the regulations. Notice of any such change during the time for public comment will be published in the Federal Register. Comments should make reference to the case numbers set forth in this notice and proposed orders. Comments should address the adequacy and validity of the finding and any other aspects or impacts of the proposed prohibition orders believed to be relevant.

Written comments on the proposed prohibition orders should be directed to Public Hearing Management (Case Nos. 52879-0646-01-82, 52879-0646-02-82, 52879-0646-03-82 and 52879-0646-04-82), U.S. Department of Energy, Box 4629, Room 3214, 2000 M Street, N.W., Washington, D.C. 20461, and should be received before 4:30 p.m. on September 26, 1980.

In accordance with 10 CFR 501.34, any interested person may request a public hearing on the proposed orders. The request must include a description of the person's interest in the proposed prohibition orders, an outline of the anticipated content of the presentation to be made at the public hearing, and an address and telephone number where the person requesting the public hearing may be reached.

Comments and other documents submitted to DOE Public Hearing Management should be identified on the outside of the envelope in which they are transmitted and on the document itself with the designation "Proposed Prohibition Orders for Gannon Units 1, 2, 3 and 4. Fifteen copies should be submitted. All written comments, all oral presentations, and all other relevant information submitted to or available to ERA will be considered by ERA. Any information or data considered to be confidential by the person furnishing it must be so identified in writing in accordance with 10 CFR 501.7(f). ERA reserves the right to determine the confidential status of the information or data and to treat it in accordance with that determination.

FOR FURTHER INFORMATION CONTACT:

William L. Webb (Office of Public Information), Economic Regulatory Administration, 2000 M Street, N.W., Room B-110, Washington, D.C. 20461; (202) 653-4055.

Robert L. Davies (Office of Fuels Conversion), Economic Regulatory Administration, Department of Energy, 2000 M Street, N.W., Room 3128L, Washington, D.C., 20461, (202) 653-3649.

Douglas F. Mitchell (Office of General Counsel), Department of Energy, 1000 Independence Avenue, S.W., Room 6G-087, Washington, D.C., 20585, (202) 252-2967.

Issued in Washington, D.C., June 23, 1980.

Robert L. Davies,

Assistant Administrator, Office of Fuels Conversion, Economic Regulatory Administration.

[FR Doc. 80-19496 Filed 6-27-80; 8:45 am]

BILLING CODE 6450-01-M

Office of Special Counsel for Compliance

Notice of Proposed Remedial Order to Exxon Co., U.S.A.

AGENCY: Department of Energy.

ACTION: Notice of proposed remedial order to Exxon Company, U.S.A. and opportunity for objections.

Pursuant to 10 CFR 205.192(c), the Office of Special Counsel for Compliance (Special Counsel) of the Economic Regulatory Administration of the Department of Energy (DOE) hereby gives notice that a Proposed Remedial Order (PRO) was issued on May 9, 1980 to Exxon Company, U.S.A., P.O. Box 2180, Houston, Texas 77001.

By this PRO, Special Counsel sets forth findings of fact and conclusions of law concerning Exxon's failure to supply Hydrocarbon Trading and Transport Company (Hydrocarbon), a Houston based distributor, with Hydrocarbon's base period entitlement of motor gasoline. According to the PRO, Hydrocarbon and Exxon entered into three exchange agreements during the base period months of March, April and May, 1978 whereby Hydrocarbon supplied Exxon with middle distillates and Exxon supplied Hydrocarbon with motor gasoline. Special Counsel contends that these exchanges of middle distillate for motor gasoline created a supplier/purchaser relationship between Exxon and Hydrocarbon pursuant to 10 CFR 211.9.

Moreover, 10 CFR 211.10(b)(2)(ii) requires that the quantity of gasoline received by Hydrocarbon in the exchanges be included in Hydrocarbon's base period volumes, and 10 CFR 211.12(b) entitles Hydrocarbon to receive from Exxon, subject to certain calculations, its base period volumes.

Exxon's refusal to include these amounts in Hydrocarbon's base period volumes constitutes a violation of 10 CFR 211.9(a). The PRO requries Exxon immediately to make available for sale to Hydrocarbon its base period entitlement of motor gasoline (as reduced by the applicable allocation fraction) for the period of March, April and May, 1979 and March, April and May 1980. In addition, Exxon is ordered to continue to supply Hydrocarbon its base period volume of motor gasoline during each subsequent March, April and May. Any person may obtain a copy of the PRO, with confidential information deleted, by written request to: Milton Jordan, Director, Division of Freedom of Information and Privacy Act Activities, Forrestal Building, Room GB-145, 1000 Independence Avenue, S.W., Washington, D.C. 20585. Attention: George W. Young, Jr.

In accordance with the provisions 10 CFR 205.193, within 15 days after the date of publication of this notice, any aggrieved person may file a Notice of Objection to the PRO. If a Notice of Objection is not filed, the Proposed Remedial Order may be issued as a final order. Such notice should be filed with: Office of Hearings and Appeals, Department of Energy, 2000 M Street, N.W., Room 8114, Washington, D.C. 20461.

Copies of the Proposed Remedial Order may be obtained in person from: Office of Freedom of Information, Reading Room, Forrestal Building, Room GA-152, 1000 Independence Avenue, S.W., Washington, D.C. 20585.

Issued in Washington, D.C. June 12, 1980.

Paul L. Bloom,

Special Counsel for Compliance.

[FR Doc. 80-19497 Filed 6-27-80; 8:45 am]

BILLING CODE 6450-01-M

Economic Regulatory Administration

[Docket No. ERA-R-80-19]

Governor's Recommendation to Increase Retail Price Margin for Motor Gasoline

AGENCY: Economic Regulatory Administration, Department of Energy.

ACTION: Notice of Governor's Recommendation.

SUMMARY: On June 13, 1980, Governor Victor Atiyeh of Oregon, acting pursuant to 10 CFR 212.93(a)(3), submitted a

recommendation to Hazel R. Rollins, Administrator of the Economic Regulatory Administration (ERA) of the Department of Energy (DOE), requesting the ERA to increase the fixed cents per gallon price markup for retail sales of motor gasoline by Oregon dealers to reflect inflation as measured by the GNP deflator.

Prior to May 19, 1980, the Governors of the several States were authorized by DOE regulation to increase the fixed cents per gallon price markup for sales of gasoline by retailers in their States, if such increase were not disapproved by the Administrator of ERA. The regulation required that these increases be cost justified and further the objectives of the Emergency Petroleum Allocation Act of 1973, as amended (EPAA).

Pursuant to that authority Governor Atiyeh issued an Executive Order effective June 19, 1979, adjusting the maximum retail price margin for Oregon's independent retail dealers to 17.9 cents per gallon. At that time, the national retail price margin under 10 CFR 212.93(a) was set at 15.4 cents per gallon.

On December 15, 1979, the ERA raised the national retail price margin by .7 cents per gallon to reflect inflation as measured by the GNP deflator. Also effective December 15, 1979, Governor Atiyeh amended his August 9, 1979 Order to reflect this .7 cent increase in the national retail price margin, raising the maximum retail price margin to 18.6 cents per gallon for Oregon's independent retail dealers.

DOE's regulations were amended on May 19, 1980 to provide that the ERA Administrator, instead of the Governor, may, upon the recommendation of the Governor of a State, increase the fixed cents per gallon markup for all or some of the retailers or resellers-retailers in the State.

On June 15, 1980, the ERA again adjusted the national retail price margin to reflect inflation, establishing a revised margin of 16.8 cent per gallon. As indicated above, Governor Atiyeh has recommended that the ERA approve a parallel increase of .7 cents per gallon in the Oregon retail price margin, to be effective June 15, 1980. This action, if approved, would establish an amended retail price margin of 19.3 cent per gallon for retail sales of gasoline by Oregon's independent retailers and reseller-retailers. In addition, Governor Atiyeh recommended that in the future the Oregon retail price margin be automatically adjusted to reflect increases for inflation in the national retail price margin. In connection with his June 19, 1979 price increase Governor Atiyeh submitted a retail price analysis to ERA which indicated that the price increase was cost justified by local economic conditions and that it furthered the objectives of the EPAA. In his recommendation of June 13, 1980, Governor Atiyeh cited this analysis and continuing inflation as the bases for his recommendation of an additional price increase.

ERA is currently considering Governor Atiyeh's recommendation. Interested persons may submit comments on the recommendation to the ERA's Office of Public Hearing Management. Copies of Governor Atiyeh's submissions may be obtained from ERA's Office of Public Hearing Management and the Oregon Department of Energy.

DATES: Comment period closes July 15, 1980.

ADDRESSES: All comments to Public Hearing Management, Docket No. ERA-R-*80-19*, Department of Energy, Room 2313, 2000 M Street, NW., Washington, D.C. 20461. Comments should be identified on the outside envelope and on documents submitted with the designation "Governor's Recommendation to increase Retail Price Margins for Motor Gasoline." Copies of the Governor's retail price analysis may be obtained from ERA's Office of Public Hearing Management at the address listed above and from the Oregon Department of Energy, Room 102, Labor and Industries Building, Salem, Oregon, 97310.

FOR FURTHER INFORMATION CONTACT:

Lynn Frank, Director, Oregon Department of Energy, Room 102, Labor and Industries Building, Salem, Oregon 97310 (503) 378-4040.

William Webb (Office of Public Information), Economic Regulatory Administration, Room B-110, 2000 M Street, NW., Washington, D.C. 20461 (202) 653-4055.

Yvonne Allen, Economic Regulatory Administration, Room 4126, 2000 M Street, NW., Washington, D.C., 20461 (202) 252-5155.

Issued at Washington, D.C., on June 24, 1980.

Hazel R. Rollins,

Administrator, Economic Regulatory Administration.

[FR Doc. 80-19584 Filed 6-27-80; 8:45 am]

BILLING CODE 6450-01-M

[ERA DOCKET NO. 80-14-NG]

Transcontinental Gas Pipe Line Corp.

AGENCY: Department of Energy, Economic Regulatory Administration.

ACTION: Notice of application to import natural gas from Canada into the United States.

SUMMARY: The Economic Regulatory Administration (ERA) of the Department of Energy is noticing the receipt of an application from Transcontinental Gas Pipe Line Corporation (Transco) to authorize natural gas imports from Canada to the United States through displacement by synthetic natural gas (SNG) manufactured and delivered in Canada. Transco proposes to import up to 10 Bcf of natural gas per year, for a period beginning November 1, 1980, and ending April 30, 1993. The application is filed with ERA pursuant to Section 3 of the Natural Gas Act and Department of Energy Delegation Order No. 0204-54. Protests or petitions to intervene are invited.

DATES: Protests or petitions to intervene are to be filed on or before July 30, 1980.

FOR FURTHER INFORMATION CONTACT:

Timothy J. French (Division of Natural Gas), Economic Regulatory Administration, Room 7108, 2000 M Street, N.W., Washington, D.C. 20461, (202) 652-3286.

James K. White, Acting Assistant General Counsel for Natural Gas and Mineral Leasing, 1000 Independence Ave., S.W., Forrestal Bldg., Room 5E0674, Washington, D.C. 20585, (202) 252-2900.

SUPPLEMENTARY INFORMATION:

Transco's application states that it has entered into a Gas Service Agreement with Union Gas Limited (Union) of Chatham, Province of Ontario, for the proposed import.

The Gas Service Agreement contemplates that Union will deliver 10 Bcf annually to Panhandle Eastern Pipe Line Company (Panhandle) for Transco's account. The source of the gas used for displacement is SNG manufactured by a petrochemical processing plant operated by Petrosar Limited near Sarnia, Ontario. The gas will be priced at the then-prevailing Canadian international border price, as defined in the Canadian Petroleum Administration Act (currently at $4.47 per MMBtu). Daily deliveries from April through December depend upon the availability of SNG to Union (expected to be up to 25,000 Mcf per day year round) with provision for Transco to nominate and receive up to a total of 30,000 Mcf per day. During January through March, Transco will receive a base volume of 3,000 Mcf per day, plus an amount equivalent to Union's receipt of synthetic gas, again with provision for Transco to nominate and receive up to a

total of 30,000 Mcf per day if agreed to by Union.

The Agreement also requires Transco to take or pay for 7.5 Bcf during the nine-month period April through December, and 2.5 Bcf during the three-month period January through March. Volumes paid for but not taken are called "prepaid gas." Transco is further required to take delivery of at least one half of the volumes of prepaid gas during the immediately succeeding nine-month or three-month period as appropriate and any remaining balance in the next succeeding nine-month or three-month period after which time the volumes are lost. At such time, Union shall refund to Transco any payment made for the remaining volumes of "prepaid gas," which were not delivered.

No new construction of facilities will be required since Transco proposes to import the gas through existing pipelines owned and operated by Panhandle which are connected to Union's facilities at the international boundary near River Rouge, Michigan. Panhandle will deliver, by displacement, equivalent quantities to Trunkline Gas Company (Trunkline) for Transco's account at existing interconnections between the Panhandle and Truckline systems, with delivery of the gas to Transco to be made by displacement at an existing interconnection between Transco and Trunkline at Ragley, Louisiana.

Other Information

The ERA invites protests or petitions for intervention in the proceeding. Such protests or petitions are to be filed with the Economic Regulatory Administration, Room 4126, 2000 M Street, N.W., Washington, D.C. 20461, in accordance with the requirements of the rules of practice and procedure (18 CFR 1.8 and 1.10). Such protests or petitions for intervention will be accepted for consideration if filed no later than 4:30 p.m., on the thirtieth day following the date of publication of this notice in the Federal Register.

Any person wishing to become a party to the proceeding or to participate as a party in any hearing which may be convened herein must file a petition to intervene. Any person desiring to make any protest with reference to the petition and application for certificate should file a protest with the ERA in the same manner as indicated above for petitions to intervene. All protests filed with ERA will be considered by it in determining the appropriate action to be taken, but will not serve to make protestants parties to the proceeding.

A formal hearing will not be held unless a motion for such hearing is made by any party or intervener and is granted by ERA, or if the ERA on its own motion believes that such hearing is required. If such hearing is required, due notice will be given.

A copy of Transco's petition is available for public inspection and copying in Room 4126, 2000 M Street N.W., Washington, D.C. 20461 between the hours of 8:00 a.m. and 4:30 p.m., Monday through Friday, except Federal holidays.

Issued in Washington, D.C. on June 24, 1980.

F. Scott Bush,

Assistant Administrator, Regulations and Emergency Planning, Economic Regulatory Administration.

[FR Doc. 80-19595 Filed 6-27-80; 8:45 am]

BILLING CODE 6450-01-M

Federal Energy Regulatory Commission

[Docket Nos. CS71-761, et al]

Alison Suzanne Robertson Murphy and A&F Enterprises, Inc., et al.; Notice of Applications for "Small Producer" Certificates [1]

June 23, 1980.

Take notice that each of the Applicants listed herein has filed an application pursuant to Section 7(c) of the Natural Gas Act and Section 157.40 of the Regulations therunder for a "small producer" certificate of public convenience and necessity authorizing the sale for resale and delivery of natural gas in interstate commerce, all as more fully set forth in the applications which are on file with the Commission and open to public inspection.

Any person desiring to be heard or to make any protest with reference to said applications should on or before July 8, 1980, file with the Federal Energy Regulatory Commission, Washington, D.C. 20426, petitions to intervene or protests in accordance with the requirements of the Commission's Rules of Practice and Procedure (18 CFR 1.8 or 1.10). All protests filed with the Commission will be considered by it in determining the appropriate action to be taken but will not serve to make the protestants parties to the proceeding. Persons wishing to become parties to a proceeding or to participate as a party in any hearing therein must file petitions to intervene in accordance with the Commission's Rules.

Take further notice that, pursuant to the authority contained in and subject to the jurisdiction conferred upon the Federal Energy Regulatory Commission by Sections 7 and 15 of the Natural Gas Act and the Commission's Rules of Practice and Procedure, a hearing will be held without further notice before the Commission on all applications in which no petition to intervene is filed within the time required herein if the Commission on its own review of the matter believes that a grant of the certificates is required by the public convenience and necessity. Where a petition for leave to intervene is timely filed, or where the Commission on its own motion believes that a formal hearing is required, further notice of such hearing will be duly given.

Under the procedure herein provided for, unless otherwise advised, it will be unnecessary for Applicants to appear or be represented at the hearing.

Lois D. Cashell,

Acting Secretary.

Docket No.	Date filed	Applicant
CS71-761	6/19/78 [1]	Alison Suzanne Robertson Murphy and A&F Enterprises, Inc., 500 Jefferson Building, Houston, Texas 77002.
CS71-762	6/19/78 [2]	Corbin J. Robertson, Jr. and Bridgeport, Inc., 500 Jefferson Building, Houston, Texas 77002.
CS71-772	6/19/78 [3]	Elizabeth Robertson Geselman and WRG, Inc., 500 Jefferson Building, Houston, Texas 77002.
CS71-774	6/19/78 [4]	Carroll Christine Robertson Hochner and Ener Corporation, 500 Jefferson Building, Houston, Texas 77002.
CS71-779	6/19/78 [5]	Hugh Roy Marshall and HRM Enterprises, Inc., 500 Jefferson Building, Houston, Texas 77002.
CS71-778	6/18/78 [6]	Wilhelmina Anne Barnhart, 500 Jefferson Building, Houston, Texas 77002.
CS72-1109 (CS73-192).	3/12/80 [7]	Dave M. Thomas, Jr. (Keesee and Thomas), P.O. Box 2026, Farmington, N.M. 87401.
CS79-131	5/15/80 [8]	Acadiana Reserves, Inc. (Caribbean Oil and Gas Corporation), P.O. Box 53576, Lafayette, Louisiana 70505.
CS80-139	5/13/80	Martin Reagen, P.O. Box 16169, Jackson, Mississippi 39206.
CS80-140	5/15/80	OHNY Ventures, Inc., P.O. Box 95, Mayville, N.Y. 14757
CS80-141	5/16/80	Petro-Enterprises, Inc., P.O. Box 1610, Greenwich, Ct. 06830.
CS80-142	5/16/80	Stowers Oil & Gas Co., P.O. Box 420, Pampa, Texas 79065.
CS80-143	5/21/80	Harold R. Herbst, 3685 "C" South Kittredge, Aurora, Colorado 80013.
CS80-144	5/23/80	Pinon Oil Company, Inc., P.O. Box 7492, Tulsa, Oklahoma 74105.
CS80-145	5/23/80	Clancy C. Pitts, 3547 South Ivanhoe, Denver, Colorado 80237.
CS80-146	5/23/80	Norris R. Harris, 1400 Republic Natl. Bank Tower, Dallas, Texas 75201.

[1] This notice does not provide for consolidation for hearing of the several matters covered herein.

Docket No.	Date filed	Applicant
CS80-147	5/23/80	Gary A. Draizen, 12851 E. 48th Avenue, Denver, Colorado 80239.
CS80-148	5/19/80	Thomas H. Fleegae, P.O. Box 18634, Dallas, Texas 75218.
CS80-149	6/2/80	OMNI Drilling Partnership No. 1980-1, P.O. Drawer 430, Wayne, Pa. 19087.
CS80-150	6/2/80	Bernerd A. Ray, P.O. Box 1385, Midland, Texas 79702.
CS80-151	6/4/80	Compass Petroleum Industries Inc., P.O. Box 264, Beaver Dam, Ky. 42320.
CS80-152	6/4/80	HCW Income Properties, 410 W. Ohio, Suite 202, Midland, Texas 79701.
CS80-153	5/22/80	R & M Mountaineer, P.O. Box 20173, San Jose, Ca. 95160.
CS80-154	5/28/80	Keystone Energy Resources Associates, 615 Iron City Dr., Pittsburgh, Pa. 15205.
CS80-155	6/10/80	Mary C. Cravens, 3000 One Shell Plaza, Houston, Texas 77002.
CS80-156	6/10/80	Dorothy S. Hammert, 1616 Westminster Place, Oklahoma City, Okla. 73102.
CS80-157	6/10/80	Fred H. Schlichting, 3000 One Shell Plaza, Houston, Texas 77002.
CS80-158	6/10/80	Testamentary Trusts Created Under Last Will and Testament of Janes Rorick Cravens, 3000 One Shell Plaza, Houston, Texas 77002.
CS80-159	6/12/80	Delta 1980 S T Joint Venture, 401 East 81st Street, 11M, New York, N.Y. 10028.
CS78-248 (CS72-516).	12/20/77[9]	Midco Energy, Inc. (Pierce & Dehlinger), 815 Petroleum Building, Midland, Texas 79701.
CS80-119 (CS71-263).	4/14/80[10]	Lear Petroleum Exploration, Inc. (Brookhaven Oil Company), 950 One Energy Square, 4925 Greenville Avenue, Dallas, Texas 75206.

[1] Letter from Applicant requesting that A&F Enterprises, Inc. be added as a holder of the small producer certificate in Docket No. CS71-761.

[2] Letter from Applicant requesting that Bridgeport, Inc. be added as a holder of the small producer certificate in Docket No. CS71-762.

[3] Letter from Applicant requisting that WRG, Inc. be added as a holder of the small producer certificate in Docket No. CS71-77.

[4] Letter from Applicant requesting that Ener Corporation be added as a holder of the small producer certificate in Docket No. CS71-774.

[5] Letter from Applicant requesting that HRM Enterprises, Inc. be added as a holder of the small producer certificate in Docket No. CS71-779.

[6] Commission letter dated 2-27-78 had erroneously dismissed Docket No. CS71-778 as a duplicate, however, letter dated 4-25-78 from Applicant reinstated Docket No. CS71-778 as valid.

[7] Letter advising that effective 1-31-75 the Partnership of Keesee and Thomas was dissolved, and Dave M. Thomas, Jr. received all of the properties from the Partnership in the dissolution. Dave M. Thomas, Jr. has previously applied for and was granted Small Producer's Certificate in Docket No. CS72-1109.

[8] Letter requesting redesignation of small producer certificate. In March 1980, Acadiana Reserves, Inc. a Louisiana corporation, acquired all oil and gas interest of Caribbean Oil and Gas Corporation as a result of a sale during the receivership proceedings for Caribbean.

[9] Pierce & Dehlinger, holder of a small producer certificate in Docket No. CS72-516, was acquired by Applicant effective 12-20-77, therefore, the small producer certificate issued in Docket No. CS72-516 is terminated.

[10] Brookhaven Oil Company, holder of a small producer certificate in Docket No. CS71-263 was purchased by Applicant effective 3-1-79, therefore, the small producer certificate issued in Docket No. CS71-263 is terminated as moot.

[FR Doc. 80-19976 Filed 6-27-80; 8:45 am]

BILLING CODE 6450-85-M

[Docket Nos. RP77-54, et al.]

Arkansas Louisiana Gas Co., et al.; Notice of Filing of Pipeline Refund Reports and Refund Plans

June 23, 1980.

Take notice that the pipelines listed in the Appendix hereto have submitted to the Commission for filing proposed refund reports or refund plans. The date of filing, docket number, and type of filing are also shown on the Appendix.

Any person wishing to do so may submit comments in writing concerning the subject refund reports and plans. All such comments should be filed with or mailed to the Federal Energy Regulatory Commission, 825 North Capitol Street, N.E., Washington, D.C. 20426, on or before July 7, 1980. Copies of the respective filings are on file with the Commission and available for public inspection.

Lois D. Cashell,

Acting Secretary.

Appendix

Filing date	Company	Docket No.	Type filing
6/6/80	Arkansas Louisiana Gas Co.	RP77-54	Report.
6/6/80	Arkansas Louisiana Gas Co.	RP77-55	Report.
6/9/80	Consolidated Gas Supply Corp.	RP72-157	Report.
6/12/80	East Tennessee Natural Gas Co.	RP78-12	Report.
6/12/80	Midwestern Gas Transmission Co.	RP78-23	Report.
6/13/80	Tennessee Gas Pipeline Co.	RP77-62	Report.
6/16/80	Natural Gas Pipe Line Co. of America.	RP78-78	Report.

[FR Doc. 80-19478 Filed 6-27-80; 8:45 am]

BILLING CODE 6460-85-M

[Docket No. ER80-457]

Arkansas Power & Light Co.; Notice of Filing

June 23, 1980.

The filing Company submits the following:

Take notice that on June 16, 1980, Arkansas Power & Light Company (AP&L) tendered for filing a letter Agreement dated May 8, 1980 between AP&L and the City of Ruston, Louisiana (Ruston) for transmission services through the System of AP&L to the system of Louisiana Power & Light Company to permit a sale by Southwestern Power Administration to Ruston of 6 MW capacity and associated energy.

AP&L requests an effective date of June 1, 1980, and therefore requests waiver of the Commission's notice requirements. AP&L further states that the rate for transmission service has previously been approved in Docket Nos. ER-79-405 and ER80-203 and that no additional facilities will be required.

Any person desiring to be heard or to protest said application should file a petition to intervene or protest with the Federal Energy Regulatory Commission, 825 North Capitol Street, N.E., Washington, D.C. 20426, in accordance with Sections 1.8 and 1.10 of the Commission's Rules of Practice and Procedure. All such petitions or protests should be filed on or before July 14, 1980. Protests will be considered by the Commission in determining the appropriate action to be taken, but will not serve to make protestants parties to the proceeding. Any person wishing to become a party must file a petiton to intervene. Copies of this application are on file with the Commission and are available for public inspection.

Lois D. Cashell,

Acting Secretary.

[FR Doc. 80-19477 Filed 6-27-80; 8:45 am]

BILLING CODE 6450-85-M

[Docket No. EL80-32]

City of Cuba City, Wisconsin v. Wisconsin Power and Light Company; Notice of Complaint

June 20, 1980.

The filing party submits the following:

Take notice that on May 27, 1980, the City of Cuba City, Wisconsin (Cuba City) filed a complaint against Wisconsin Power and Light Company (WPL). The complaint alleges that WPL has violated section 205 of the Federal Power Act by failing to charge Cuba City for electricity according to the terms of the effective rate. Specifically, Cuba City states that it is an all requirements wholesale electric customer of WPL. Further, Cuba City alleges that under WPL's currently effective rate schedule W-3, a five percent (5%) discount is applicable for service at 34.5 kv or above. Cuba City claims that WPL has failed to apply this discount to electricity purchased by Cuba City since, December, 1979. Accordingly, Cuba City requests that WPL be ordered to apply the discount immediately to all future bills of Cuba City, and to refund, with interest at the appropriate rate, the amount collected from Cuba City since December, 1979 in

excess of what should have been collected had the discount been applied.

Any person desiring to be heard or to protest said application should file a petition to intervene or protest with the Federal Energy Regulatory Commission, 825 North Capitol Street, N.E., Washington, D.C. 20426, in accordance with Sections 1.8 and 1.10 of the Commission's Rules of Practice and Procedure (18 CFR 1.8 or 1.10). All such petitions or protests should be filed on or before July 21, 1980. Protests will be considered by the Commission in determining the appropriate action to be taken but will not serve to make protestants parties to the proceeding. Any person wishing to become a party must file a petition to intervene. Copies of this application are on file with the Commission and are available for public inspection.

Lois D. Cashell,

Acting Secretary.

[FR Doc. 80-19480 Filed 6-27-80; 8:45 am]

BILLING CODE 6450-85-M

[Docket No. GP80-11]

Columbia Gas Transmission Co.; Notice of Third-Party Protests [1]

June 23, 1980.

Take notice that in accordance with the procedures established by the Federal Energy Regulatory Commission (Commission) in Order No. 23-B,[2] and "Order on Rehearing of Order No. 23-B,"[3] the Staff of the Commission protested on April 15, 1980, the assertion by the Columbia Gas Transmission Company (Columbia) and certain producers that the contracts identified in Staff's protest constitute contractual authority for the producers to charge and collect any applicable maximum lawful price under the Natural Gas Policy Act of 1978 (NGPA), 15 U.S.C. § 3301 *et seq.*

Staff stated that the contracts contained in Appendix A do not provide authority for the producer to increase prices to the extent claimed by Columbia in its evidentiary submission.

Take further notice that the Associated Gas Distributors (AGD) filed a supplemental third-party protest on May 16, 1980. AGD protests that the contracts in appendix B do not provide contractual authority for the producer to increase prices charged and collected to the applicable NGPA maximum lawful price.

Any person, other than the pipeline and the seller, desiring to be heard or to make any response with respect to these protests should file with the Commission, 825 North Capitol Street, N.E., Washington, D.C., 20426, on or before July 14, 1980, a petition to intervene in accordance with 18 C.F.R. § 1.8. The seller need not file for intervention because under 18 C.F.R. § 154.94(j)(4)(ii) the seller in the first sale is automatically joined as a party.

Lois D. Cashell,

Acting Secretary.

APPENDIX A

Producer	Rate Schedule No. or Contract Date
Mobile Oil Corporation	7-13-79
Mobile Oil Corporation	545

APPENDIX B

Producer	Rate Schedule No. or Contract Date
Plateau Resource Development Corp.	3/3/80
Plateau Resource Development Corp.	2/11/80
Appalachian Energy, Inc.	2/8/80
Bounty Oil & Gas, Inc.	2/25/80
C & M Company	2/25/80
Petroleum Development Corp.	2/5/80
Red lead Oil, Ltd.	2/19/80
The Chesterfield Corp.	2/26/80
The Chesterfield Corp.	1/24/80
Robert E. Fox and Xoil Special Drilling Partners	2/20/80
West Union Drilling Co. No 1	2/28/80
ENG Drilling Co. No. 3 and J & J Enterprises, Inc.	2/25/80
Benson Drilling Joint Venture No. 3	2/25/80
Benson Drilling Joint Venture, II	2/5/80
Justine Rogers and Michael Rogers, d.b.a. Rogers and Son	2/11/80
BB Associates II, *et al.*	2/7/80
BB Associates II, *et al.*	2/7/80
United Energy Associates, *et al.*	2/7/80
R & M Mountaineer, *et al.*	2/8/80
Sterling Drilling & Production Co., Inc, and Chester C Dodd, Jr.	2/7/80
Sterling Drilling & Production Co., Inc, and Chester C. Dodd, Jr.	2/7/80
Franklin 1976 Drilling Partners	10/17/80
Franklin 1976 Drilling	10/17/79
Tno Petroleum Corp	2/7/80
Union Drilling Inc.	2/13/80
Petro Resources, Ltd.	2/25/80
Roger Adams d b a. Adams Drilling Co.	3/10/76
Alfred E. Knobler	9/1/76
Myra Jean Prior	12/30/68
Tri-County Oil & Gas, Inc.	7/9/48
Great Basins Petroleum Co	5/10/73
Alfred E. Knobler	12/21/77
Alfred E. Knobler	11/2/77
Alfred E. Knobler and Dale Adkins, Inc	9/18/78
Alfred E. Knobler and Dale Adkins, Inc	9/7/78
Fox Oil & Gas, Inc.	2/1/47
Hanley & Bird	2/15/46
MOB Corporation	12/11/64
Kenneth P Milliken	12/23/43
J. Robert Nelson	1/11/23
J. Robert Nelson	1/19/32
J. Robert Nelson	1/10/46
J. Robert Nelson	8/24/50

[FR Doc. 80-19479 Filed 6-25-80; 8:45 am]

BILLING CODE 6450-85-M

[1] The term "third-party protest" refers to a protest filed by a party who is not a party to the contract which is protested.

[2] "Order Adopting Final Regulations and Establishing Protest Procedure," Docket No. RM79-22, issued June 21, 1979.

[3] Docket No. RM79-22, issued August 6, 1979.

[Docket No. ES80-60]

El Paso Electric Co.; Notice of Application

June 23, 1980.

Take notice that on June 6, 1980, El Paso Electric Company (Applicant) filed a request with the Commission, pursuant to Section 204 of the Federal Power Act, requesting authority to negotiate for the placement of up to 150,000 shares of Preferred Stock, no par value, with an estimated market value of $15 million. The Applicant is a Texas Corporation, with its principal office at El Paso, Texas and is engaged in the electric utility business in Texas and New Mexico.

The net proceeds from the sale of the Preferred Stock will be used to finance Applicant's construction program and repay short-term debt.

Any person desiring to be heard or to make any protest with reference to the application should on or before July 7, 1980, file with the Federal Energy Regulatory Commission, Washington, D.C. 20426, petitions or protests in accordance with the Commission's Rules of Practice and Procedure (18 CFR 1.8 or 1.10). The application is on file with the Commission and is available for public inspection.

Lois D. Cashell,

Acting Secretary.

[FR Doc. 80-19481 Filed 6-27-80; 8:45 am]

BILLING CODE 6450-85-M

[Docket No. QF80-11]

Hunt-Wesson Foods, Inc.; Notice of Application for Commission Certification of Qualifying Status of a Cogeneration Facility

June 23, 1980.

On June 11, 1980 Hunt-Wesson Foods, Inc. filed with the Federal Energy Regulatory Commission (Commission) an application for certification of a facility as a qualifying cogeneration facility pursuant to § 292.207 of the Commission's rules.

The facility is located in Shelby County, Tennessee. Hunt-Wesson Foods, Inc. states that the facility is a topping cycle cogneration facility wherein steam from boilers passes through the turbine and is used to generate electricity. Natural gas will be the primary energy source for the facility. No. 6 fuel will also be used. Hunt-Wesson Foods, Inc. further states that the system will be capable of producing 1000 kilowatts of electrical power and that it is totally owned by the applicant.

Any person desiring to be heard or objecting to the granting of qualifying status should file a petition to intervene or protest with the Federal Energy Regulatory Commission, 825 North Capitol Street, N.E., Washington, D.C. 20426, in accordance with §§ 1.8 and 1.10 of the Commission's Rules of Practice and Procedure. All such petitions or protests must be filed within 30 days after the date of publication of this notice and must be served on the applicant. Protests will be considered by the Commission in determining the appropriate action to be taken but will not serve to make protestants parties to the proceeding. Any person wishing to become a party must file a petition to intervene. Copies of this filing are on file with the Commission and are available for public inspection.

Lois D. Cashell,

Acting Secretary.

[FR Doc. 80-19482 Filed 6-27-80; 8:45 am]

BILLING CODE 6450-85-M

[Docket No. CP80-401]

Kentucky West Virginia Gas Co.; Notice of Application

June 23, 1980.

Take notice that on June 12, 1980, Kentucky West Virginia Gas Company (Applicant), P.O. Box 1388, Ashland, Kentucky 41101, filed in Docket No. CP80-401 an application pursuant to Section 7(c) of the Natural Gas Act for a certificate of public convenience and necessity authorizing it to install and operate minor facilities and to make deliveries of natural gas to its corporate parent, Equitable Gas Company for resale to 35 right-of-way grantors in Kentucky and Iowa, all as more fully set forth in the application which is on file with the Commission and open to public inspection.

It is stated that all of the proposed customers have requested gas service pursuant to the terms of the right-of-way easements and agreements heretofore entered into between Applicant and said customers.

Applicant proposes to serve the following right-of-way grantors:

(1) From Applicant's 2-inch Line No. W-7273—(a) Donald R. Thacker, Lexington, Kentucky, (b) Bobby Coleman, Raccoon Creek, Kentucky, (c) Kerron Weddington, Pikeville, Kentucky, (d) Lillian Coleman, Pikeville, Kentucky, (e) William H. Tackett, Pikeville, Kentucky.

(2) From Applicant's 8-inch Line No. 1—(a) Winston Dillion, East Point, Kentucky, (b) James Larry Daniels, Allen, Kentucky.

(3) From Applicant's 4-inch Line No. N-516—(a) Tommy Breuning, Marion, Iowa, (b) Denver Minland, Cornettsville, Kentucky.

(4) From Applicant's 4-inch Line No. 9C—(a) Denver Patrick, Garrett, Kentucky.

(5) From Applicant's 2-inch Line No. W-7258—(a) Arthur Varney, Raccoon, Kentucky.

(6) From Applicant's 2-inch Line No. W-5474—(a) Wallace R. Collins, Van Lear, Kentucky.

(7) From Applicant's 2-inch Line No. N-198—(a) Roscoe Ferguson, Lexington, Kentucky, (b) Richard Collins, Van Lear, Kentucky, (c) Eunice Hites, Van Lear, Kentucky.

(8) From Applicant's 4-inch Line No. N-517—(a) Jerry Combs, Talcum, Kentucky.

(9) From Applicant's 3-inch Line No. W-7255—(a) Cecil Justice, Raccoon, Kentucky, (b) Lawrence Morris, Raccoon, Kentucky, (c) Charlie Chapman, Raccoon, Kentucky, (d) Alvin Coleman, Raccoon, Kentucky, (e) Landon Justice, Raccoon, Kentucky.

(10) From Applicant's 2-inch pipeline No. W-443—(a) Thomas Lafferty, Prestonsburg, Kentucky, (b) Burl Wells Spurlock, Prestonsburg, Kentucky.

(11) From Applicant's 8-inch Line No. 6—(a) John Wallen, Prestonsburg, Kentucky.

(12) From Applicant's 4-inch Line No. N-413—(a) Norman Stamper, Dwarf, Kentucky.

(13) From Applicant's 2-inch Line No. W-1727—(a) Charles Slone, Hindman, Kentucky, (b) Shelby Hall, Hindman, Kentucky, (c) Lizzie Chaffins, Hindman, Kentucky.

(14) From Applicant's 2-inch Line No. W-1686—(a) Lee Click, Hindman, Kentucky, (b) Theda Hollan, Hindman, Kentucky.

(15) From Applicant's 4-inch Line No. N-520—(a) Lola S. Francisco, Ashcamp, Kentucky, (b) William L. Crum, Ashcamp, Kentucky, (c) Opal Birchfield, Ashcamp, Kentucky, (d) Dallas Cook, Ashcamp, Kentucky, (e) Willie Ratcliff, Ashcamp, Kentucky.

Applicant estimates that each consumer would require approximately 250 Mcf per year on the average.

Applicant states that the cost of each tap is approximately $216 which equates to a total of $7,560. This cost, it is asserted, would be financed by cash on hand.

Any person desiring to be heard or to make any protest with reference to said application should on or before July 14, 1980, file with the Federal Energy Regulatory Commission, Washington, D.C. 20426, a petition to intervene or a protest in accordance with the requirements of the Commission's Rules of Practice and Procedure (18 CFR 1.8 or 1.10) and the Regulations under the Natural Gas Act (18 CFR 157.10). All protests filed with the Commission will be considered by it in determining the appropriate action to be taken but will not serve to make the protestants parties to the proceeding. Any person wishing to become a party to a proceeding or to participate as a party in any hearing therein must file a petition to intervene in accordance with the Commission's Rules.

Take further notice that, pursuant to the authority contained in and subject to jurisdiction conferred upon the Federal Energy Regulatory Commission by Sections 7 and 15 of the Natural Gas Act and the Commission's Rules of Practice and Procedure, a hearing will be held without further notice before the Commission or its designee on this application if no petition to intervene is filed within the time required herein, if the Commission on its own review of the matter finds that a grant of the certificate is required by the public convenience and necessity. If a petition for leave to intervene is timely filed, or if the Commission on its own motion believes that a formal hearing is required, further notice of such hearing will be duly given.

Under the procedure herein provided for, unless otherwise advised, it will be unnecessary for Applicant to appear or be represented at the hearing.

Lois D. Cashell,

Acting Secretary.

[FR Doc. 80-19483 Filed 6-27-80; 8:45 am]

BILLING CODE 6450-85-M

[Docket No. ER78-355]

Lockhart Power Co.; Notice of Filing

June 23, 1980.

The filing Company submits the following:

Take notice that on June 3, 1980, Lockhart Power Company submitted for filing a refund report pursuant to the Commission's letter order of May 5, 1980.

A copy of this filing has been sent to the City of Union, South Carolina and the South Carolina Public Service Commission.

Any persons desiring to be heard or to protest said filing should file a protest with the Federal Energy Regulatory Commission, 825 North Capitol Street, N.E., Washington, D.C. 20426, in accordance with Sections 1.8 and 1.10. All such protests should be filed on or before July 7, 1980. Protests will be considered by the Commission in

determining the appropriate action to be taken. Copies of this filing are on file with the Commission and are available for public inspection.

Lois D. Cashell,

Acting Secretary.

[FR Doc. 80-19484 Filed 6-27-80; 8:45 am]

BILLING CODE 6450-85-M

[Docket No. RP80-113]

Mid Louisiana Gas Co.; Notice of Proposed Change in FERC Gas Tariff

June 20, 1980.

Take notice that Mid Louisiana Gas Company (Mid Louisiana) on June 13, 1980, tendered for filing as a part of First Revised Volume No. 1 of its FERC Gas Tariff, Thirty-Sixth Revised Sheet No. 3a.

Mid Louisiana states that the purpose of the filing is to reflect an increase in rates to be effective July 15, 1980. The proposed changes would increase Rate Schedules G-1, SG-1 and I-1 from 235.97 cents per Mcf to 236.72 cents per Mcf based on operations for the twelve months ended March 31, 1980, as adjusted.

Mid Louisiana states that the principal reasons for the proposed increase are (1) the cost of connecting and having transported to Mid Louisiana's system new sources of gas supply to replace declining volumes from existing sources, (2) increases in employee payroll and benefit program costs, and (3) other cost increases net of decreases arising during the last three years. Mid Louisiana states that the net effect of these adjustments does not have a significant impact upon the Company's rates.

Copies of the filing have been served on interested customers and state commissions.

Any person desiring to be heard or to protest said application should file a petition to intervene or protest with the Federal Energy Regulatory Commission, 825 North Capitol Street, N.E., Washington, D.C. 20426, in accordance with Sections 1.8 and 1.10 of the Commission's Rules of Practice and Procedure (18 CFR 1.8, 1.10). All such petitions or protests should be filed on or before June 30, 1980. Protests will be considered by the Commission in determining the appropriate action to be taken, but will not serve to make protestants parties to the proceeding.

Any person wishing to become a party must file a petition to intervene. Copies of this application are on file with the commission and are available for public inspection.

Lois D. Cashell,

Acting Secretary.

[FR Doc. 80-19485 Filed 6-27-80; 8:45 am]

BILLING CODE 6450-85-M

[Docket Nos. G-5716, et al.]

Northern Natural Gas Producing Co., et al; Notice of Applications for Certificates, Abandonment of Service and Petitions To Amend Certificates [1]

June 23, 1980.

Take notice that each of the Applicants listed here in has filed an application or petition pursuant to Section 7 of the Natural Gas Act for authorization to sell natural gas in interstate commerce or to abandon service as described herein, all as more fully described in the respective applications and amendments which are on file with the Commission and open to public inspection.

Any person desiring to be heard or to make any protest with reference to said applications should on or before July 8, 1980, file with the Federal Energy Regulatory Commission, Washington, D.C. 20426, petitions to intervene or protests in accordance with the requirements of the Commission's Rules of Practice and Procedure (18 CFR 1.8 or 1.10). All protests filed with the Commission will be considered by it in determining the appropriate action to be taken but will not serve to make the protestants parties to the proceeding. Persons wishing to become parties to a proceeding or to participate as party in any hearing therein must file petitions to intervene in accordance with the Commission's Rules.

Take further notice that, pursuant to the authority contained in and subject to the jurisdiction conferred upon the Federal Energy Regulatory Commission by Sections 7 and 15 of the Natural Gas Act and the Commission's Rules of Practice and Procedure a hearing will be held without further notice before the Commission on all applications in which no petition to intervene is filed within the time required herein if the Commission on its ownreview of the matter believes that a grant of the certificates or the authorization for the proposed abandonment is required by the public convenience and necessity. Where a petition for leave to intervene is timely filed, or where the Commission on its own motion believes that a formal hearing is required, further notice of such hearing will be duly given.

Under the procedure herein provided for, unless otherwise advised, it will be unnecessary for Applicants to appear or to be represented at the hearing.

Lois D. Cashell,

Acting Secretary.

BILLING CODE 6450-85-M

[1] This notice does not provide for consolidation for hearing of the several matters covered herein

Docket No. G-5716, et al.

Filing Code:

A - Initial Service
B - Abandonment
C - Amendment to add acreage
D - Amendment to delete acreage
E - Total Succession
F - Partial Succession

Docket No. and Date Filed	Applicant	Purchaser and Location	Price Per Mcf	Pressure Base
G-5716 D 6/6/80	Northern Natural Gas Producing Company Nine Greenway Plaza - Suite 2700 Houston, Texas 77046	Northern Natural Gas Company Hugoton Field, Finney and Grant Counties, Kansas	To release gas for irrigation fuel.	
G-7642 D 6/6/80	Mobil Oil Corporation Nine Greenway Plaza - Suite 2700 Houston, Texas 77046	Northern Natural Gas Company Hugoton Field, Stevens County, Kansas	To release gas for irrigation fuel.	
G-7643 D 6/10/80	Mobil Oil Corporation	Northern Natural Gas Company Hugoton Field, Stevens County, Kansas	To release gas for irrigation fuel.	
G-10164 D 6/9/80	Gulf Oil Corporation P. O. Box 2100 Houston, Texas 77001	Tennessee Gas Pipeline Company, a Division of Tenneco, Inc. Timbalier Bay Field, Lafourche Parish, and Offshore Louisiana	Portion of acreage released and wells plugged and abandoned.	
G-11863 D 6/5/80	Mobil Oil Corporation	Lone Star Gas Company Graham Area, Carter County, Oklahoma	By Partial Release Agreement dated 1-1-80.	
CI61-182 D 4/14/80	General American Oil Company of Texas Meadows Building Dallas, Texas 75206	Transcontinental Gas Pipe Line Corporation Johnson Bayou Field, Cameron Parish, Louisiana	Final determination under Section 103 of the NGPA of 1978.	
CI63-459 D 6/9/80	Gulf Oil Corporation	Michigan Wisconsin Pipe Line Company Certain acreage located in Sections 4 and 12, T-24-N, R-13-W, Woods County, Oklahoma	1/	
CI63-1127 D 5/27/80	Pioneer Production Corporation, et al. P. O. Box 2542 Amarillo, Texas 79189	Northern Natural Gas Company Mammoth Creek, N. (Cleveland) Field, Section 1047, Block 43, H&TC Survey, Lipscomb County, Texas	Depletion of gas in paying quantities.	
CI63-1309 D 4/14/80	General American Oil Company of Texas	Transcontinental Gas Pipe Line Corporation Johnson Bayou Field, Cameron Parish, Louisiana	Final determination under Section 103 of the NGPA of 1978.	
CI69-184 D 5/27/80	Amoco Production Company P. O. Box 50879 New Orleans, La. 70150	Transcontinental Gas Pipe Line Corporation South Marsh Island, Field 38, Offshore Louisiana	Release of leases has been approved by the U.S. Department of the Interior.	
CI69-806 D 6/4/80	Cities Service Company P. O. Box 300 Tulsa, Okla. 74102	Trunkline Gas Company Vermillion Block 123, Offshore Louisiana	2/	
CI69-1164 D 6/5/80	Gulf Oil Corporation	Texas Gas Transmission Corporation Six Mile Lake Field, St. Martin and St. Mary Parishes, Louisiana	Lease expired and all wells are plugged and abandoned.	
CI70-635 C 5/28/80	ARCO Oil and Gas Company, Division of Atlantic Richfield Company P. O. Box 2819 Dallas, Texas 75221	Tennessee Gas Pipeline Company South Timbalier Block 23, Bay Marchand Block 2 Field, Offshore Louisiana	3/	15.025

FPC Form 973
Rev (6-70)

Docket No. G-5716, et al.

Filing Code:

A - Initial Service
B - Abandonment
C - Amendment to add acreage
D - Amendment to delete acreage
E - Total Succession
F - Partial Succession

Docket No. and Date Filed	Applicant	Purchaser and Location	Price Per Mcf	Pressure Base
CI76-641 C 5/28/80	ARCO Oil and Gas Company, Division of Atlantic Richfield Company P. O. Box 2819 Dallas, Texas 75221	Tennessee Gas Pipeline Company West Cameron Blocks 34 and 67, Offshore Louisiana	4/	15.025
CI77-478 C 6/13/80	Tenneco Exploration II, Ltd. P. O. Box 2511 Houston, Texas 77001	Tenneco Oil Company South Timbalier 37 Field, Offshore Louisiana	5/	15.025
CI77-479 C 6/13/80	Tenneco Exploration, Ltd. P. O. Box 2511 Houston, Texas 77001	Tenneco Oil Company South Timbalier 37 Field, Offshore Louisiana	5/	15.025
CI77-481 C 6/13/80	Tenneco Oil Company P. O. Box 2511 Houston, Texas 77001	Tennessee Gas Pipeline Company South Timbalier 37 Field, Offshore Louisiana	6/	15.025
CI79-611 C 5/29/80	Union Oil Company of California Union Oil Center, Room 901 P. O. Box 7600 Los Angeles, Ca. 90051	Sea Robin Pipeline Company Block 40, Vermilion Area, Offshore Louisiana	7/	15.025
CI79-624 C 6/9/80	Texas Gas Exploration Corporation P. O. Box 52310 Houston, Texas 77052	Consolidated Gas Supply Corporation 'B' Platform in Vermilion Block 313, Offshore Louisiana, OCS-G-1172	8/	15.025
CI80-2[illegible] C 5/22/80	Tenneco Oil Company	El Paso Natural Gas Company Section 25-T14N-R26W, Roger Mills County, Oklahoma	9/	14.65
CI80-337 B 6/10/80	Woods Petroleum Corporation Suite 500 Natl. Foundation West Bldg. 3555 Northwest 58th Street Oklahoma City, Okla. 73112	Lone Star Gas Company Harley No. 1 Well Palacine Field, Sec. 9-2S-6W, Stephens County, Oklahoma	Depleted.	
CI80-338 (G-7341) B 6/10/80	Mitchell Energy Corporation 3900 One Shell Plaza Houston, Texas 77002	Trunkline Gas Company Sabine Tram Field, Newton County, Texas	The B. E. Quinn #1 well ceased production.	
CI80-341 A 5/29/80	General American Oil Company of Texas Meadows Building Dallas, Texas 75206	Tennessee Gas Pipeline Company East Cameron Block 351, Offshore Louisiana	10/	15.025
CI80-342 C 5/27/80	Amerada Hess Corporation 1200 Milam, 6th Floor Houston, Texas 77002	Transcontinental Gas Pipe Line Corporation Live Oak Field, Vermilion Parish, Louisiana	11/	15.025
CI80-343 A 5/29/80	CNG Producing Company Suite 3100, One Canal Place New Orleans, La. 70130	Consolidated Gas Supply Corporation "D" Platform, Ship Shoal Block 248, and "F" Platform, Ship Shoal Block 247, Offshore Louisiana	12/	14.73

FPC Form 973
Rev (6-70)

Docket No. G-5716, et al.

Filing Code:

A - Initial Service
B - Abandonment
C - Amendment to add acreage
D - Amendment to delete acreage
E - Total Succession
F - Partial Succession

Docket No. and Date Filed	Applicant	Purchaser and Location	Price Per Mcf	Pressure Base
CI80-344 (G-4298) B 5/27/80	Energy Reserves Group, Inc. P. O. Box 1201 Wichita, Kansas 67201	Tennessee Gas Pipeline Company Cecil Noble Field, Colorado County, Texas	Property has been sold.	
CI80-345 A 5/19/80	Conoco Inc. P. O. Box 2197 Houston, Texas 77001	Trunkline Gas Company South half of Block 86, South Timbalier Area, Offshore of Louisiana	13/	15.025
CI80-346 A 5/30/80	Transco Exploration Company P. O. Box 1396 Houston, Texas 77001	Transcontinental Gas Pipe Line Corporation West Delta Area, Block 35 Field (North Half of Block 34), Offshore Gulf of Mexico	14/	15.025
CI80-347 A 5/30/80	Transco Exploration Company	Transcontinental Gas Pipe Line Corporation High Island Area, Block A-471, Offshore Gulf of Mexico	14/	14.65
CI80-348 A 5/30/80	Transco Exploration Company	Transcontinental Gas Pipe Line Corporation High Island Area, Block A-492, Offshore Gulf of Mexico	14/	14.65
CI80-349 A 6/3/80	Felmont Oil Corporation P. O. Box 2266 Midland, Texas 79702	Columbia Gas Transmission Corporation Blocks 276 and 287 Vermilion Area, Offshore Louisiana	12/	15.025
CI80-350 A 6/3/80	Case-Pomeroy Oil Corporation P. O. Box 1511 Midland, Texas 79702	Columbia Gas Transmission Corporation Blocks 276 and 287 Vermilion Area, Offshore Louisiana	12/	15.025
CI80-351 (CI71-512) B 5/13/80	Gulf Oil Corporation P. O. Box 2100 Houston, Texas 77001	United Gas Pipe Line Company Hainesville Dome Field, Wood County, Texas	15/	
CI80-352 (CI61-1809) B 6/2/80	Getty Oil Company P. O. Box 1404 Houston, Texas 77001	Florida Gas Transmission Company Opelousas Field, Cockfield Formation, St. Landry Parish, Louisiana	Not capable of producing gas in commercial quantities and considered to be depleted.	
CI80-353 A 6/3/80	FIN-OIL, Inc. P. O. Box 2159 Dallas, Texas 75221	Michigan Wisconsin Pipe Line Company Block A-312, (SW/4), High Island Area, Offshore Texas	16/	14.65
CI80-354 A 6/2/80	CNG Producing Company Suite 3100, One Canal Place New Orleans, La. 70130	Consolidated Gas Supply Corporation "A" Platform, High Island Block A-571, Offshore Texas	17/	14.73
CI80-355 A 6/5/80	Mesa Petroleum Co. One Mesa Square P. O. Box 2009 Amarillo, Texas 79189	United Gas Pipe Line Company High Island Block A-273, Offshore Texas	18/	14.73

FPC Form 973
Rev (6-70)

Docket No. G-5716, et al.

Filing Code:

A - Initial Service
B - Abandonment
C - Amendment to add acreage
D - Amendment to delete acreage
E - Total Succession
F - Partial Succession

Docket No. and Date Filed	Applicant	Purchaser and Location	Price Per Mcf	Pressure Base
CI80-356 D 5/28/80	Bright & Company 8918 Tesoro Drive, Suite 575 San Antonio, Texas 78217	Natural Gas Pipeline Company of America N. E. Thompsonville (Wilcox) Field, Webb County, Texas	19/	
CI80-357 D 5/28/80	Bright & Company	Natural Gas Pipeline Company of America N. E. Thompsonville (Wilcox) Field, Webb County, Texas	19/	
CI80-359 A 6/5/80	Mesa Petroleum Co. One Mesa Square P. O. Box 2009 Amarillo, Texas 79189	United Gas Pipe Line Company High Island Area, Southwest Quarter of Block A-312, Offshore Louisiana	18/	14.73
CI80-360 (CI76-146) B 6/6/80	Kerr-McGee Corporation P. O. Box 25861 Oklahoma City, Okla. 73125	Cities Service Gas Company Locke (Brown Dolomite) Field (formerly called the "Hamon Locke Field"), Hemphill County, Texas	20/	
CI80-361 A 6/6/80	Shell Oil Company One Shell Plaza P. O. Box 2463 Houston, Texas 77001	Tennessee Gas Pipeline Company West Cameron Block 65 Field, Offshore Louisiana	14/	15.025
CI80-362 B 6/6/80	Energy Development Corporation 80 Park Place Newark, N. J. 07101	Public Service Electric and Gas Company Spring Ridge (Johnson Branch), Caddo Parish, Louisiana	21/	
CI80-363 A 6/9/80	Cabot Corporation One Houston Center Suite 1000 Houston, Texas 77002	Northern Natural Gas Company South Marsh Island OCS-G-2890, Block 265, Offshore Louisiana	22/	14.73
CI80-364 E 6/11/80	Southwest Gas Storage Company (Succ. in Interest to Ferguson Oil Company, Inc.) P. O. Box 1642 Houston, Texas 77001	Panhandle Eastern Pipe Line Company Borchers North Field, Meade County, Kansas	23/	14.65
CI80-365 A 6/9/80	Conoco Inc. P. O. Box 2197 Houston, Texas 77001	Michigan Wisconsin Pipe Line Company Blocks 136 and 137, South Marsh Island, Offshore Louisiana	24/	15.025
CI80-366 A 6/12/80	Getty Oil Company P. O. Box 1404 Houston, Texas 77001	Michigan Wisconsin Pipe Line Company Certain acreage in the High Island Area Block A-555, Offshore Texas	10/	14.65
CI80-367 (G-7147) B 6/10/80	Gulf Oil Corporation P. O. Box 2100 Houston, Texas 77001	United Gas Pipe Line Company North McFaddin Field, Victoria County, Texas	25/	
CI80-368 (G-16761) B 6/6/80	Gulf Oil Corporation	Natural Gas Pipeline Company of America West Cement Field, Caddo County, Oklahoma	The last well covered by the contract has ceased to produce and the leases have expired.	

FPC Form 973
Rev (6-70)

Docket No. G-5716, et al.

FOOTNOTES:

1/ Acreage was undeveloped since no wells were ever completed by Gulf on the acreage. The leases covering this acreage expired by their own terms and were cancelled.

2/ Leases expired on 10-8-79, due to cessation of production. Wells A-5 and A-7, the last producing wells on the Block, have become loaded with sand or have watered-out. Evaluations of the sands indicate that any remedial or recompletion work would be uneconomical; therefore, all the wells on this lease are either being plugged and abandoned or are scheduled to be soon. The production platform serving Vermillion Block 123 Wells A-5 and A-7, which is situated in Vermillion Block 120, is scheduled to be salvaged.

3/ Applicant is filing under Contract dated 12-19-69, amended by Amendment dated 10-5-79.

4/ Applicant is filing under Contract dated 6-17-76, amended by Amendment dated 1-9-80.

5/ Applicant is filing under Gas Sales Contract dated 4-7-77, amended by Supplemental Gas Purchase Agreement dated 5-21-80.

6/ Applicant is filing under Gas Sales Contract dated 4-11-77, amended by Supplemental Gas Purchase Agreement dated 6-3-80.

7/ Applicant is willing to accept a certificate containing an initial rate of the maximum lawful price as prescribed in Section 271.402 of the Regulations implementing Section 104 of the NGPA of 1978.

8/ Applicant is filing under Gas Purchase Contract dated 4-1-79, amended by Letter Agreement dated 5-23-80.

9/ Applicant is filing under Gas Purchase Agreement dated 12-1-79, amended by a Supplemental Gas Purchase Agreement dated 3-1-80.

10/ Applicant is filing under Gas Purchase and Sales Agreement dated 5-13-80.

11/ Applicant is filing under a rollover Gas Purchase Agreement dated 4-29-80 and is willing to accept the applicable maximum lawful price as provided by the NGPA of 1978.

12/ Applicant is willing to accept the Certificate being applied for herein if such Certificate authorizes the initial sale of gas thereunder at the applicable maximum rate prescribed by the Commission at the time of initial deliveries thereunder; provided, however, Applicant reserves the right to reject such Certificate if it contains other conditions that are unacceptable.

13/ Applicant is filing under Gas Purchase Contract dated 3-31-80.

14/ Applicant is willing to accept a certificate conditioned upon the maximum applicable rate as allowed by the NGPA of 1978.

15/ All of the leases covered by the basic Contract, as amended, have been terminated or assigned and the Contract expired by its own terms on 4-13-80.

16/ Applicant is filing under Gas Purchase and Sales Agreement dated 4-11-80.

17/ Applicant is willing to accept a certificate conditioned to the applicable national rate as determined by the NGPA of 1978, plus the adjusted and escalations provided for in the 18 CFR 2.56a and in the NGPA of 1979.

18/ Applicant is willing to accept the applicable rate under Section 104 of the NGPA of 1978.

19/ Purchaser does not elect to connect. Purchaser's reservoir engineering department estimates very small reserves and testing indicated low deliverability from well. Bright & Company, new owner of shallow rights to which service is to be abandoned is a small producer in Docket No. CS71-70.

20/ The only well drilled in said acreage was no longer economically productive, and was plugged and abandoned and lease has been released of record.

21/ The field was comprised of two wells. One well was plugged and abandoned on 9-15-79 and the other well ceased production on 12-17-79. Arrangements are now being made to plug and abandon that well. There are no plans to drill any other wells in the field.

22/ Applicant is filing under Gas Sales Contract dated 6-26-79.

23/ By this application, Southwest seeks authority, as successor in interest, to render service previously rendered under a small producer certificate issued to Ferguson Oil Company, Inc. in Docket No. CS71-228 issued 10-1-71. By "ASSIGNMENT OF OIL AND GAS LEASES", Ferguson assigned to Southwest all of its right, title and interest in and to certain oil and gas leases covering lands situated in Meade County, Kansas effective 9-1-79. Applicant requests its certificate of public convenience and necessity be effective 9-1-79, the effective date of the "ASSIGNMENT OF OIL AND GAS LEASES".

24/ Applicant is filing under Gas Purchase Contract dated 3-27-80.

25/ Delivery has ceased and all of the leases covered by the basic contract, as amended, have been terminated and the Contract was terminated effective as of 6-6-79.

[FR Doc. 80-19487 Filed 6-25-80; 8:45 am]
BILLING CODE 6450-85-C

[Docket No. CP80-396]

Southwest Gas Corp.; Notice of Application

June 23, 1980.

Take notice that on June 6, 1980, Southwest Gas Corporation (Applicant), P.O. Box 15015, Las Vegas, Nevada 89114, filed in Docket No. CP80-396 an application pursuant to Section 7(c) of the Natural Gas Act for a certificate of public convenience and necessity authorizing the construction and operation of a new tap facility, all as more fully set forth in the application which is on file with the Commission and open to public inspection.

Applicant proposes to construct a high pressure tap located near Winnemucca, Nevada, in order to deliver volumes of gas to two residential customers in Pershing County, Nevada.

Applicant states that the volumes to be delivered would be solely for Priority 1 use with average daily requirements to be approximately .6 Mcf. Peakday requirements would be approximately 3 Mcf per day, it is asserted, and annual deliveries would reach approximately 224 Mcf.

Applicant estimates the cost of the proposed facility to be $900. It is stated that the cost would be financed by an advance made to the Applicant by the customer or developer of the respective locations.

It is further asserted that the actual sales of gas would be made pursuant to Applicant's existing authorization from the Public Service Commission of Nevada.

Any person desiring to be heard or to make any protest with reference to said application should on or before July 14, 1980, file with the Federal Energy Regulatory Commission, Washington, D.C. 20426, a petition to intervene or a protest in accordance with the requirements of the Commission's Rules of Practice and Procedure (18 CFR 1.8 or 1.10) and the Regulations under the Natural Gas Act (18 CFR 157.10). All protests filed with the Commission will be considered by it in determining the appropriate action to be taken but will not serve to make the protestants parties to the proceeding. Any person wishing to become a party to a proceeding or to participate as a party in any hearing therein must file a petition to intervene in accordance with the Commission's Rules.

Take further notice that, pursuant to the authority contained in and subject to jurisdiction conferred upon the Federal Energy Regulatory Commission by Sections 7 and 15 of the Natural Gas Act and the Commission's Rules of Practice and Procedure, a hearing will be held without further notice before the Commission or its designee on this application if no petition to intervene is filed within the time required herein, if the Commission on its own review of the matter finds that a grant of the certificate is required by the public convenience and necessity. If a petition for leave to intervene is timely filed, or if the Commission on its own motion believes that a formal hearing is required, further notice of such hearing will be duly given.

Under the procedure herein provided for, unless otherwise advised, it will be unnecessary for Applicant to appear or be represented at the hearing.

Lois D. Cashell,

Acting Secretary.

[FR Doc. 80-19486 Filed 6-27-80; 8:45 am]

BILLING CODE 6450-85-M

[Docket No. QF80-8]

Twin Falls Canal Co.; Notice of Application for Commission Certification of Qualifying Status of a Small Power Production Facility

June 23, 1980.

On June 5, 1980, Twin Falls Canal Company (Twin Falls) filed with the Federal Energy Regulatory Commission (Commission) an application for certification of a facility as a qualifying small power production facility pursuant to § 292.207 of the Commission's rules.

The proposed small conduit hydroelectric facility would be located at the head of the Low Line Canal in Twin Falls, Idaho. Twin Falls stated that it is not engaged in the business of the generation or sale of electric power and that this facility would merely make an additional use of water that is presently diverted and used for irrigation purposes. The power production at the facility is substantially less than 80 megawatts, and there are no other power facilities at the same site. Twin Falls would be the owner and operator of the facility. The primary energy source to be used at the Low Line Canal Drop Facility is Small River water which is diverted during the irrigation season through the canal system for agricultural purposes; and there is no planned usage of natural gas, oil or coal. Twin Falls further states that the project will develop a maximum of 8,921 kilowatts in the months of July and August with average flows of 1,580 c/f/s under a gross head of 87.6 feet with a turbine efficiency of 90.3. Twin Falls also states that it owns no other power facilities within one mile of the project location nor does it contemplate the development of power facilities within one mile which would use the same energy source.

Any person desiring to be heard or objecting to the granting of qualifying status should file a petition to intervene or protest with the Federal Energy Regulatory Commission, 825 North Capital Street N.E., Washington, D.C. 20426, in accordance with §§ 1.8 and 1.10 of the Commission's Rules of Practice and Procedure. All such petitions or protests must be filed on or before July 30, 1980 and must be served on the applicant. Protests will be considered by the Commission in determining the appropriate action to be taken but will not serve to make protestants parties to the proceeding. Any person wishing to become a party must file a petition to intervene. Copies of this filing are on file with the Commission and are available for public inspection.

Lois D. Cashell,

Acting Secretary.

[FR Doc. 80-19486 Filed 6-27-80; 8:45 am]

BILLING CODE 6450-85-M

[Docket No. CP80-402]

United Gas Pipe Line Co.; Notice of Application

June 23, 1980.

Take notice that on June 13, 1980, United Gas Pipe Line Company (Applicant), P.O. Box 1478, Houston, Texas 77001, filed in Docket No. CP80-402 an application pursuant to Section 7(c) of the Natural Gas Act for a certificate of public convenience and necessity authorizing the transportation of natural gas for Mid Louisiana Gas Company (Mid Louisiana), all as more fully set forth in the application which is on file with the Commission and open to public inspection.

Applicant specifically requests permanent authorization to transport natural gas for Mid Louisiana under an agreement between it and Mid Louisiana dated January 7, 1980. Applicant states that it had been transporting gas for Mid Louisiana since March 4, 1980, under Part 284 of the Regulations under the Natural Gas Policy Act of 1978.

Applicant reports that Mid Louisiana has acquired a right to purchase a new gas supply attributable to the interests of Trident Gas Gathering Company (Trident) located in Caldwell Parish, Louisiana. It is stated that Mid Louisiana would deliver quantities of gas up to 200 Mcf per day less fuel and company use gas to Applicant at a proposed point of interconnection

between the systems of Applicant and Trident in Caldwell Parish, Louisiana. Applicant states that it would then transport and redeliver equivalent quantities to Mid Louisiana at existing points of interconnection between Applicant's and Mid Louisiana's pipelines.

It is further stated that Applicant's and Mid Louisiana's transportation agreement is for a term of 5 years, beginning on March 4, 1980, and continues from year to year thereafter. Applicant asserts it would charge Mid Louisiana for the gas transported an amount per Mcf equal to Applicant's jurisdictional transportation rate in the Northern Rate Zone, which is currently 23.29 cents per Mcf. Applicant further states that it would retain 2.3 percent of the gas received for fuel and company use gas.

Any person desiring to be heard or to make any protest with reference to said application should on or before July 14, 1980, file with the Federal Energy Regulatory Commission, Washington, D.C. 20426, a petition to intervene or a protest in accordance with the requirements of the Commissions's Rules of Practice and Procedure (18 CFR 1.8 or 1.10) and the Regulations under the Natural Gas Act (18 CFR 157.10). All protests filed with the Commission will be considered by it in determining the appropriate action to be taken but will not serve to make the protestants parties to the proceeding. Any person wishing to become a party to a proceeding or to participate as a party in any hearing therein must file a petition to intervene in accordance with the Commission's Rules.

Take further notice that, pursuant to the authority contained in and subject to the jurisdiction conferred upon the Federal Energy Regulatory Commission by Sections 7 and 15 of the Natural Gas Act and the Commission's Rules of Practice and Procedure, a hearing will be held without further notice before the Commission or its designee on this application if no petition to intervene is filed within the time required herein, if the Commission on its own review of the matter finds that a grant of the certificate is required by the public convenience and necessity. If a petition for leave to intervene is timely filed, or if the Commission on its own motion believes that a formal hearing is required, further notice of such hearing will be duly given.

Under the procedure herein provided for, unless otherwise advised, it will be unnecessary for Applicant to appear or be represented at the hearing.

Louis D. Cashell,

Acting Secretary.

[FR Doc. 80-19489 Filed 5-27-80; 8:45 am]

BILLING CODE 6450-85-M

ENVIRONMENTAL PROTECTION AGENCY

[FRL 1527-6]

Distribution of Wastewater Construction Grant Funds; Proposed Methodology

AGENCY: Environmental Protection Agency (EPA).

ACTION: Proposed Methodology for Distribution of Construction Grant Funds.

SUMMARY: This is to provide an opportunity for comment on the proposed methodology for distributing $400 million FY 1980 funds for the EPA wastewater treatment construction grant program.

DATE: Written comments will be received with respect to the proposed methodology. Comments must be received on or before July 15, 1980.

ADDRESS: Comments should be addressed to Henry L. Longest, II, Deputy Assistant Administrator for Water Program Operations (WH-546), Environmental Protection Agency, 401 M Street, S.W., Washington, D.C. 20460.

FOR FURTHER INFORMATION CONTACT: Michael J. Quigley, Director, Office of Program Management & Evaluation, Environmental Protection Agency, 401 M Street, S.W., Washington, D.C. 20460; telephone (202) 426-7887.

SUPPLEMENTARY INFORMATION: As part of President Carter's budget reduction effort, EPA is striving to reduce outlays by $102 million in FY 1981. To achieve the target outlay reduction, EPA will cut $7 million from FY 1981 salary and expense plans and will initiate a reduction in obligations in the wastewater treatment construction grant program to achieve the remaining $95 million outlay reduction. The wastewater treatment construction grant program is funded through section 201 of the Clean Water Act, as amended, 33 U.S.C. 1281.

The reduction in obligations in the wastewater treatment construction grant program has been accomplished through a deferral of a substantial amount of obligation authority until the end of FY 1980. The obligation authority included in the deferral are FY 1980 new obligation authority for the wastewater treatment construction grant program, deobligations (recoveries) of prior year funds which are treated as FY 1980 funds, and all remaining funds appropriated in Pub. L. 94-447.

The FY 1980 new obligation authority and deobligations of prior year funds which are treated as FY 1980 funds are available for obligation purposes until September 30, 1981. The funds made available by Pub. L. 94-447 have no time restriction for obligation purposes.

The deferral did not include nor impose any restrictions on FY 1979 new obligation authority, deobligations of prior year funds which are treated as FY 1979 funds, or FY 1980 new obligation authority for State Management Assistance Grants authorized by Section 205(g) of the Clean Water Act, as amended, 33 U.S.C. 1285(g).

The deferral became effective in March 1980 and was implemented pursuant to the Impoundment Control Act, 31 U.S.C. 1401 *et seq.* See 53 Comp. Gen. 453 (1974).

Of the FY 1980 new obligation authority included in the deferral, $400 million will be apportioned to EPA in the fourth quarter of this fiscal year. 31 U.S.C. 665. When the $400 million is made available, the demand for these funds will far exceed the amount available. To make the most efficient and effective use of these funds, EPA initiated a comprehensive and open review to evaluate a large number of alternatives on how these funds could be distributed among competing demands. Under all alternatives studied, the $400 million will be distributed to fund projects which are on the fundable portion of a State's priority list. In addition, no alternative will be used to increase or decrease the total amount that any State will receive by the allotment formula for the two-year availability period. The alternatives only affect the timing of when the States receive funds within their allotments and the allotment availability period.

The total remaining amount of FY 1980 funds included in the deferral will be made available in 1981. By the end of FY 1981, each State will have access to its full allotment of FY 1980 funds.

To be able to define and evaluate alternatives, the agency determined that State and project needs had to be assessed. Representatives of EPA Headquarters met with each Regional Office and State representatives to discuss and gather data on those projects held up due to the deferral. The additional demand on FY 1980 funds through the fourth quarter of FY 1980 by the projects impacted by the deferral action was initially estimated by the States at $1.72 billion for 1,683 individual projects. The previous

Agency budget plan for the FY 1980 appropriation for construction grants was $1.0 billion to be obligated in FY 1980 and the remaining $2.4 billion of FY 1980 funds to be obligated in FY 1981. The Agency budget plan was developed by EPA based upon data submitted by the States. At the time of the deferral, $120 million had been obligated leaving $880 million of FY 1980 funds remaining for FY 1980 obligations. Therefore, the $1.72 billion in total State estimated needs was considered too high a starting point for analysis of various options. EPA Regional representatives then analyzed the gathered data and arrived at a total need of $1.24 billion for 1,063 projects. This was felt to be a more consistent estimate of actual and current needs.

Headquarters, Regional and State representatives then worked together to develop specific categories into which the projects would fit. The categories developed are as follows:-

Federal Court Order
Federal and State Court Order
State Priority
Increase to Award
Critical Step 1 or 2
AST/AWT Projects
Local Funding Share Secured
I/A Reserve
Small Community Reserve
Continuing Segment
Continuing Phase
Grant Increase
Authority to Award

Information collected was set into a computer data base for analysis. Based on the above categories, over 40 combinations (or alternatives) of needs were tested. Based upon the FY 1980 funds to be made available, ten alternatives for funding were chosen as most representative for final consideration (refer to Attachment A).

The ten funding alternatives focused primarily on the following three areas: (1) Those projects on which a federal court order existed as a result of a Title III enforcement action or other action under federal law; (2) those projects on which a federal or State court order existed as a result of an enforcement action; (3) those projects which had the most immediate needs as determined by the States in conjunction with the EPA Regional Offices.

Following development of the funding alternatives, representatives of EPA met with the Board of the Administrators of State and Interstate Water Pollution Control Agencies (which had representatives from each EPA Regional area present) and requested they provide their recommendations within one week. Based on their comments and those received from public interest groups and congressional staffs, the decision was made to choose alternative #6 as the basis for distributing the funds among the States. Alternative #6 provides for projects with Federal Court Orders, Increases to Award, Grant Increases, Small Community Reserve, Continuing Phases and Continuing Segments. Since the total amount for this alternative exceeded the $400 million available for release, alternative #6 was prorated back to $400 million (Refer to Attachment B). The advantages of this alternative are that it both meets the needs of small communities and those projects under a federal court order and addresses those ongoing projects with immediate needs (i.e., those projects seeking increases and those needing continuing phased or segmented portions). EPA recognized throughout this process that ongoing projects which were generally under construction deserved special attention during the deferral. EPA instruction memoranda acknowledging special attention for ongoing projects under construction were prepared and released. (See EPA Instruction Memorandum No. 80-2, Subject: "Bids in Excess of Grant Amount" and EPA Instruction Memorandum No. 80-3, Subject: "Grantee Cost Overruns"). It is felt that a distribution of the $400 million in September 1980 based on federal court orders, assistance to small communities, and immediate needs gives states the best mix and some latitude to deal with affected projects.

One comment that was initially made was that EPA should simply apply the allotment formula to the $400 million to be made available in September. However, as seen by Attachment C, the States severely impacted by the deferral are better able to meet their needs by using the various funding alternatives rather than by using the allotment formula. In addition, if distribution of the $400 million of FY 1980 funds were based on the allotment formula, the distribution formula would have to include the $120 million obligated prior to the deferral as well as the $400 million to be distributed in September. Also, the formula distribution would have to include all States, not just the 36 States which submitted data for the deferral. Use of the formula will result in the distribution of FY 1980 funds to States that will still have available adequate FY 1979 funds to meet their immediate needs.

Of primary importance to the Agency was the selection of a distribution alternative which will assist the States to meet their immediate needs until the remaining funds included in the deferral are made available in FY 1981. The decision to select Alternative #6 was made after a comprehensive evaluation was conducted of a large number of possible alternatives and opportunity to informally comment was afforded to a range of interested parties.

Dated: June 23, 1980.

James N. Smith,

Acting Assistant Administrator for Water and Waste Management.

BILLING CODE 6560-01-M

Attachment A

Funding Alternatives Using Combinations of Characteristics
EPA Estimates

Alternative	Federal Court Order ($203M)	Federal and State Court Order ($269M)	State Priority ($558M)	Increase To Award ($82M)	Critical Steps 1 and 2 ($53M)	AS1/AW1 Projects ($219M)	I/A Reserve ($119M)	Local Share Secured ($724M)	Small Community Reserve ($18M)	Continuing Segment ($97M)	Continuing Phase ($131M)	Grant Increase ($287M)	Authority To Award ($206M)	Number of Projects	Grant Amount ($ Thousands)
1	●		●											278	508 517
2		●										●		275	401 894
3		●		●			●		●					211	438 352
4		●		●								●		281	484 300
5				●						●	●	●		287	407 538
6	●			●					●	●	●	●		357	620 263
7				●			●		●			●		332	426 794
8	●			●								●		253	445 696
9	●			●			●		●			●		348	561 771
10				●					●			●		317	410 285

NOTE: A project may have one or more characteristics for a given alternative

Attachment B

FUNDS AVAILABLE FOR EACH STATE UNDER OPTION 6

	OPTION 6 (000)	PRORATED TO $400M (000)
TOTALS	620,263	400,000
REGION I		
Connecticut	5,700	3,676
Maine	5,763	3,717
Massachusetts	18,427	11,883
New Hampshire	5,436	3,506
Rhode Island	11,000	7,094
Vermont	500	322
REGION II		
New Jersey		
New York		
Puerto Rico	1,500	967
Virgin Islands		
REGION III		
Delaware		
Maryland		
Pennsylvania	44,456	28,669
Virginia	25,596	16,507
West Virginia	8,250	5,320
Dist.of Columbia		
REGION IV		
Alabama		
Florida	30,920	19,940
Georgia	1,700	1,096
Kentucky		
Mississippi	563	363
North Carolina		
South Carolina		
Tennessee	4,195	2,705
REGION V		
Illinois	45,082	29,073
Indiana		
Michigan	15,000	9,673
Minnesota		
Ohio		
Wisconsin	31,990	20,630
REGION VI		
Arkansas		
Louisiana	26,328	16,979
New Mexico	653	421
Oklahoma		
Texas	15	10
REGION VII		
Iowa	4,716	3,041
Kansas	7,772	5,012
Missouri		
Nebraska	9,700	6,255
REGION VIII		
Colorado		
Montana		
North Dakota		
South Dakota	3,832	2,471
Utah	1,870	1,206
Wyoming		
REGION IX		
Arizona	13,329	8,596
California	232,725	150,082
Hawaii		
Nevada		
American Samoa		
Tr.Terr.of Pac.Islds.		
Guam		
No. Mariana Islds.		
REGION X		
Alaska	7,000	4,514
Idaho		
Oregon	18,847	12,154
Washington	37,398	24,118

DISTRIBUTION OF DEFERRED FUNDS
$400M VIA ALLOTMENT VS. PRORATED OPTION 6
($ MILLION)

Attachment C

	1	2	3*	4	5*
	$526M BY FORMULA	$126M OBLIG'D IN FY80 FUNDS	1-2 DIFF.	OPTION 6 PRORATED TO $400M	3-4 DIFF.
TOTALS	526.0	126.0	400.0	400.0	0.0
REGION I					
Connecticut	5.7		5.7	3.7	2.0
Maine	3.9		3.9	3.7	.2
*Massachusetts	15.3		15.3	11.9	3.4
*New Hampshire	4.6	13.0	(8.4)	3.5	(11.9)
Rhode Island	2.7		2.7	7.1	(4.4)
Vermont	2.6		2.6	.3	2.3
REGION II					
New Jersey	18.5		18.5		18.5
New York	55.1		55.1		55.1
Puerto Rico	6.1		6.1	1.0	5.1
Virgin Islands	.2	1.0	(0.8)		(0.8)
REGION III					
Delaware	2.6		2.6		2.6
Maryland	14.4		14.4		14.4
*Pennsylvania	22.6	36.0	(13.4)	28.6	(42.0)
*Virginia	10.2	9.0	1.2	16.5	(15.3)
West Virginia	9.3		9.3	5.3	4.0
Dist.of Columbia	2.6		2.6		2.6
REGION IV					
Alabama	6.7		6.7		6.7
*Florida	19.9		19.9	19.9	0
Georgia	10.1		10.1	1.1	9.0
Kentucky	7.6		7.6		7.6
*Mississippi	5.0		5.0	.4	4.6
North Carolina	10.3		10.3		10.3
South Carolina	6.1		6.1		6.1
Tennessee	8.0		8.0	2.7	5.3
REGION V					
*Illinois	27.0	8.0	19.0	29.1	(10.1)
Indiana	14.4		14.4		14.4
Michigan	21.4		21.4	9.7	11.7
Minnesota	9.7		9.7		9.7
Ohio	33.5		33.5		33.5
*Wisconsin	10.1		10.1	20.6	(10.5)
REGION VI					
Arkansas	3.9		3.9		3.9
Louisiana	6.5		6.5	17.0	(10.5)
New Mexico	2.6		2.6	.4	2.2
Oklahoma	4.8		4.8		4.8
Texas	22.6		22.6	.1	22.5
REGION VII					
Iowa	6.7		6.7	3.0	3.7
Kansas	4.6	1.0	3.6	5.0	(1.4)
Missouri	12.9		12.9		12.9
*Nebraska	2.9		2.9	6.3	(3.4)
REGION VIII					
Colorado	4.8		4.8		4.8
Montana	2.6	1.0	1.6		1.6
North Dakota	2.6		2.6		2.6
*South Dakota	2.6	3.0	(0.4)	2.5	(2.9)
Utah	2.6		2.6	1.2	1.4
Wyoming	2.6		2.6		2.6
REGION IX					
*Arizona	4.0	8.0	(4.0)	8.6	(12.6)
*California	41.2	32.0	9.2	150.1	(140.9)
Hawaii	4.1		4.1		4.1
Nevada	2.6	1.0	1.6		1.6
American Samoa	0.3		0.3		.3
Tr.Terr.of Pac.Islds.	0.7		0.7		.7
Guam	0.4		0.4		.4
No. Mariana Islds.	0.1		0.1		.1
REGION X					
Alaska	2.6		2.6	4.5	(1.9)
Idaho	2.6		2.6		2.6
*Oregon	6.7		6.7	12.1	(5.4)
*Washington	9.2	13.0	(3.8)	24.1	(27.9)

*Those States which used at least 90% of their FY79 funds by April 30, 1980.

[OPTS-590012A; FRL 1477-5]

Approval of Test Marketing Exemption

AGENCY: Environmental Protection Agency (EPA).

ACTION: Notice.

SUMMARY: EPA has granted an exemption from the premanufacture notification requirements of Section 5 of the Toxic Substances Control Act (TSCA) for the test marketing of a polymer of fumaric acid, isophthalic acid, adipic acid, neopentyl glycol, diethylene glycol, and propylene glycol. (The manufacturer has requested confidentiality for its identity.)

FOR FURTHER INFORMATION CONTACT: Paul Wilson, Notice Review Branch, Premanufacturing Review Division (TS-794), Office of Pesticides and Toxic Substances, Environmental Protection Agency, Washington, D.C., 20460 (202/426-3980).

SUPPLEMENTARY INFORMATION: Under section 5 of TSCA, anyone who intends to manufacture in, or import into, the United States a new chemical substance for a commercial purpose must submit a premanufacture notice (PMN) to EPA before manufacture or import begins. A "new" chemical substance is any chemical substance that is not on the Inventory of existing substances compiled by EPA under section 8(b) of TSCA. Section 5(a)(1) requires each PMN to be submitted in accordance with section 5(d) and any applicable requirement of section 5(b). Section 5(d)(1) defines the contents of a PMN and section 5(b) contains additional reporting requirements for certain new chemical substances.

Section 5(h), "Exemptions," contains several provisions for exemptions from some or all of the requirements of section 5. In particular, section 5(h)(1) authorizes EPA, upon application, to exempt persons from any requirements of section 5(a) or section 5(b), and to permit such applicants to manufacture or process new chemical substances for test marketing purposes. To grant an exemption, the Agency must find that the test marketing activities will not present any unreasonable risk of injury to health or the environment. Section 5(h)(6) provides that EPA must either approve or deny the application within 45 days of its receipt and must publish a notice of its decision in the Federal Register. If EPA grants a test marketing exemption, it may impose restrictions on the test marketing activities.

On January 29, 1980, EPA received an application for an exemption from the requirements of sections 5(a) and 5(b) of TSCA to manufacture a substance for test marketing purposes. EPA acknowledged receipt of the application in the Federal Register on March 3, 1980 (45 FR 13815). The applicant claimed its company identity to be confidential. The substance for which the exemption application was submitted is a polymer of fumaric acid, isophthalic acid, adipic acid, neopentyl glycol, diethylene glycol, and propylene glycol.

In its application, the manufacturer stated that it intends to produce and distribute between 104,000 pounds and 112,000 pounds of the polymer (mixed with 30 percent to 35 percent of a styrene cross-linking agent) over a 180-day period following approval of the exemption application. The manufacturer further stated that it would distribute the polymer to no more than three customers for processing as a cured, cross-linked polyester plastic used to form articles intended for industrial applications.

The manufacturer stated that the polymer will be produced in a completely enclosed system equipped with a reflux column vented to an incinerator so that the only waste product from manufacturing is water, which is subsequently treated. Any unusable PMN material will either be incinerated or polymerized and used in landfill. Between four and eight workers may be exposed to the substance during the manufacturing process. Worker inhalation and dermal exposures are possible during sampling and drumming operations. The manufacturer stated that there is an air system in the workplace to control dust, and that the workers are provided with necessary protective clothing, such as gloves, face masks, or goggles. The manufacturer provided no information on the possible number of workers exposed to the new chemical substance during processing operations at its customers' facilities. EPA expects that such workers would be exposed to the polymer and to the styrene cross-linking agent through both dermal and inhalation routes.

EPA believes that the manufacturing process and the steps taken by the company to limit exposure to the new chemical sustance and its components will provide adequate protection to workers involved with the production of the polymer. In addition, although there is no available estimate of the number of workers exposed to the substance during processing, EPA believes that the workplace controls in effect to limit exposure to styrene also will minimize the potential for worker exposure to the polymer itself because a Threshold Limit Value (TLV) established by the Occupational Safety and Health Administration is in effect for styrene.

The manufacturer stated that no data concerning the potential environmental or health effects of the polymer were available. However, based upon information about the substance and its constituents, especially regarding exposure of human and ecological populations to the substance during test marketing, EPA believes that the substance will not resent either an acute or chronic toxicity problem. The substance has a negligible vapor pressure and is insoluble in water. Although the substance should be relatively persistent in the environment due to its molecular size (the molecular weight is stated to be slightly below 5,000), the substance should not be biologically available to environmental organisms and should not bioaccumulate. This molecular weight also means that the substance will be too large for significant human absorption, although the polymer has the potential to be more reactive (and thus more likely to be an irritant) than the final cross-linked resin product, which should be essentially inert.

Based upon the available information on the potential toxicity of the substance and upon the anticipated exposure during test marketing, EPA concludes that the substance will not present any unreasonable risk of injury to health or the environment as a result of the test marketing activities described by the manufacturer. This expectation is based on the low toxicity indicated by the structure of the chemical substance itself and what is known about the constituent monomers. Therefore EPA approves this application for use of the substance for test marketing.

The manufacturer that applied for this test marketing exemption also submitted a PMN for this substance on January 22, 1980. EPA acknowledged receipt of the PMN in the Federal Register on February 29, 1980 (45 FR 13529). The PMN review period expired on April 21, 1980. Since the Agency did not take action under section 5(c) of TSCA to extend the review period, and did not act to regulate the new substance under section 5(e) or section 5(f) of TSCA, the manufacturer may produce this substance for commercial purposes without further review under section 5 of TSCA.

The Agency recognizes that this notice granting the test marketing exemption is being published following the expiration of the PMN review period. However, the manufacturer was informed around March 12, 1980 that the exemption had been granted.

Publication of this notice is to complete the public record of the action concerning this test marketing exemption.

Dated: June 24, 1980.

Douglas M. Costle,

Administrator.

[FR Doc. 80-19507 Filed 6-27-80; 8:45 am]

BILLING CODE 6560-01-M

[OPTS-51083; FRL 1528-1]

Certain Chemicals; Premanufacture Notices

AGENCY: Environmental Protection Agency (EPA).

ACTION: Notice.

SUMMARY: Section 5(a)(1) of the Toxic Substances Control Act (TSCA) requires any person who intends to manufacture or import a new chemical substance to submit a premanufactrue notice (PMN) to EPA at least 90 days before manufacture or import commences. Section 5(d)(2) requires EPA to publish in the Federal Register certain information about each PMN within 5 working days after receipt. This Notice announces receipt of four PMN's and provides a summary of each.

DATES: Written comments by August 11, 1980.

ADDRESS: Written comments to: Document Control Officer (TS-793), Office of Pesticides and Toxic Substances, Environmental Protection Agency, 401 M St., SW, Washington, DC 20460, 202-755-8050.

FOR FURTHER INFORMATION CONTACT: Mr. David Dull, Premanufacturing Review Division (TS-794), Office of Pesticides and Toxic Substances, Environmental Protection Agency, 401 M St., SW, Washington, DC 20460, 202-426-2601.

SUPPLEMENTARY INFORMATION: Section 5(a)(1) of TSCA requires any person who intends to manufactrue or import a new chemical substance to submit a PMN to EPA at least 90 days before manufacture or import commences. A "new" chemical substance is any substance that is not on the Inventory of exisiting substances compiled by EPA under Section 8(b) of TSCA. EPA first published the Initial Inventory on June 1, 1979. Notice of availability of the Initial Inventory was published in the Federal Register of May 15, 1979 (44 FR 28558). The requirement to submit a PMN for new chemical substances manufactured or imported for commercial purposes became effective on July 1, 1979.

EPA has proposed premanufacture notification rules and forms in the Federal Register issues of January 10, 1979 (44 FR 2242) and October 16, 1979 (44 FR 59764). These regulations, however, are not yet in effect. Interested persons should consult the Agency's Interim Policy published in the Federal Register of May 15, 1979 (44 FR 28564) for guidance concerning premanufacture notificaiton requirements prior to the effective date of these rules and forms. In particular, see page 28567 of the Interim Policy.

A PMN must include the information listed in Section 5(d)(1) of TSCA. Under section 5(d)(2) EPA must publish in the Federal Register nonconfidential information on the identity and uses of the substance, as well as a description of any test data submitted under section 5(b). In addition, EPA has decided to publish a description of any test data submitted with the PMN and EPA will publish the identity of the submitter unless this information is claimed confidential.

Publication of the section 5(d)(2) notice is subject to section 14 concerning disclosure of confidential information. A company can claim confidentiality for any information submitted as part of a PMN. If the company claims confidentiality for the specific chemical identity or use(s) of the chemical, EPA encourages the submitter to provide a generic use description, an nonconfidential description of the potential exposures from use, and a generic name for the chemical. EPA will publish the generic name, the generic use, and the potential exposure descriptions in the Federal Register.

If no generic use description or generic name is provided, EPA will develop one and after providing due notice to the EPA submitter, will publish an amended Federal Register notice. EPA immediately will review confidentiality claims for chemical identity, chemical use, the identity of the submitter, and for health and safety studies. If EPA determines that portions of this information are not entitled to confidential treatment, the Agency will publish an amended notice and will place the information in the public file, after notifying the submitter and complying with other applicable procedures.

After receipt, EPA has 90 days to review a PMN under section 5(a)(1). The section 5(d)(2) Federal Register notice indicates the date when the review period ends for each PMN. Under section 5(c), EPA may, for good cause, extend the review period for up to an additional 90 days. If EPA determines that an extension is necessary, it will publish a notice in the Federal Register.

Once the review period ends, the submitter may manufacture the substance unless EPA has imposed restrictions. When the submitter begins to manufacture the substance, he must report to EPA, and the Agency will add the substance to the Inventory. After the substance is added to the Inventory, any company may manufacture it without providing EPA notice under section 5(a)(1)(A).

Therefore, under the Toxic Substances Control Act, summaries of the data taken from the PMN are published herein.

Interested persons may, on or before August 11, 1980, submit to the Document Control Officer (TS-793), Rm. E-447, Office of Pesticides and Toxic Substances, 401 M St., SW, Washington, DC 20460, written comments regarding these notices. Three copies of all comments shall be submitted, except that individuals may submit single copies of comments. The comments are to be identified with the document control number "[OPTS-51083]" and the specific PMN number. Comments received may be seen in the above office between 8:00 a.m., and 4:00 p.m., Monday through Friday, excluding holidays.

(Sec. 5, 90 Stat. 2012 (15 U.S.C. 2604))

Dated: June 23, 1980.

Warren R. Muir,

Acting Deputy Assistant Administrator for Chemical Control.

PMN 80-132

Close of Review Period. September 10, 1980.

Manufacturer's Identity. E. I. du Pont de Nemours and Co., Wilmington, DE 19898.

Specific Chemical Identity. Claimed confidential. Generic name provided: Acidic phenyltetrazole derivative.

The following summary is taken from data submitted by the manufacturer in the PMN.

Use. Ingredient in photographic product.

Production Estimates. First year—50 kilograms (kg); Second year—75 kg.; Third year—100 kg.

Physical/Chemical Properties. Melting point—170-173° C; Appearance—Light yellow crystalline solid; Solubility—0.1-1.0 percent in methanol, >10 percent in DMSO, <0.1 percent in water.

Toxicity Data. Skin irritation (rabbits)—Non-irritant; Approximate lethal dose (ALD) (rats)—17,000 mg/kg; Eye irritation (rabbits)—Mild irritant; Primary skin irritation and sensitization (guinea pigs)—Mild irritant, no sensitization observed.

Occupational Exposure.

Activity and Route(s)	Number of potentially exposed workers	Maximum duration of exposure
Manufacturing:		
Dermal	1	8 hr/da; 5 da/yr.
Dermal	1	4 hr/da; 5 da/yr.
Inhalation	1	1 hr/da; 5 da/yr.
Processing:		
Dermal	7	1 hr/da.
Inhalation	7	½ hr/da.

Environmental Release. E. I. du Pont claims that there will be no release to the environment of the PMN substance.

PMN 80-133

Close of Review Period. September 10, 1980.

Manufacturer's Identity. E. I. du Pont de Nemours and Co., Wilmington, DE 19898.

Specific Chemical Identity. Claimed confidential. Generic name provided: Substituted nitroaromatic.

The following summary is taken from data submitted by the manufacturer in the PMN.

Use. Captive intermediate.

Production Estimates. First year—51.3 kilograms (kg); Second year—76.9 kg; Third year—102.5 kg.

Physical/Chemical Properties. Melting point—164-168°C; Appearance—Light yellow crystalline solid; Solubility—>10% in acetone, >10% in DMSO, <0.1% in water.

Toxicity Data. Primary skin irritation and sensitization (guinea pigs)—Mild to no skin irritation, weak sensitizer; Eye irritation (rabbits)—Mild irritant; Acute oral toxicity (rats)—Low; ALD—7,500 mg/kg.

Occupational Exposure.

Activity/Site and Route(s)	Number of potentially exposed workers	Maximum duration of exposure
Manufacturing:		
Inhalation	1	1 hr/da; 5 da/yr.
Parlin, NJ:		
Dermal	1	5 hr/da; 5 da/yr.
Wilmington, DE:		
Inhalation	1	5 hr/da; 3 da/yr.
Dermal	1	1 hr/da; 3 da/yr.

Environmental Release. E. I. du Pont claims that there will be no release to the environment of the PMN substance.

PMN 80-134

Close of Review Period. September 10, 1980.

Manufacturer's Identity. E. I. du Pont de Nemours and Co., Wilmington, DE 19898.

Specific Chemical Identity. Claimed confidential. Generic name provided: Nitro acid.

The following summary is taken from data submitted by the manufacturer in the PMN.

Use. Captive intermediate.

Production Estimates. First year—114 kilograms (kg); Second year—172 kg; Third year—229 kg.

Physical/Chemical Properties. Melting point—163-164°C; Appearance—Yellow crystalline solid; Solubility—>10% in acetone, >10% in DMSO, <0.1% in water.

Toxicity Data. Acute oral toxicity (rats)—Slightly toxic; ALD—3,400 mg/kg; Skin irritation (rabbits)—Non-irritant; Primary skin irritation and sensitization (guinea pigs)—Non-irritant, non-sensitizer; Eye irritation (rabbits)—Slight to mild irritant.

Occupational Exposure.

Activity/Site and Route(s)	Number of potentially Exposed workers	Maximum duration of exposure
Manufacturing:		
Inhalation	1	2 hr/da; 5 da/yr.
Parlin, NJ:		
Dermal	1	5 hr/da; 5 da/yr.
Wilmington, DE:		
Inhalation	1	2 hr/da; 3 da/yr.
Dermal	1	5 hr/da; 3 da/yr.

Environmental Release. E. I. du Pont claims there will be no release to the environment of the PMN substance.

PMN 80-135.

Close of Review Period. September 10, 1980.

Manufacturer's Identity. E. I. du Pont de Nemours and Co., Wilmington, DE 19898.

Specific Chemical Identity. Claimed confidential. Generic name provided: Substituted propane.

The following summary is taken from data submitted by the manufacturer in the PMN.

Use. Captive intermediate.

Production Estimates. First year—1.64 kilograms (kg); Second year—2.46 kg; Third year—3.29 kg.

Physical/Chemical Properties. No data submitted.

Toxicity Data. Skin irritation (rabbits)—Non-irritant; Acute oral toxicity (rats)—Moderately toxic; ALD—300 mg/kg; Eye irritation (rabbits)—Mild irritant; Primary skin irritation and sensitization (guinea pigs)—Non-irritant, non-sensitizer.

Occupational Exposure.

Activity/Site and Route(s)	Number of potentially exposed workers	Maximum duration of exposure
Manufacturing:		
Dermal	1	2 hr/da, 5 da/yr.
Parlin, NJ:		
Inhalation	1	1.5 hr/da; 5 da/yr.
Wilmington, DE.		
Dermal	1	2 hr/da; 3 da/yr.
Inhalation	1	1.5 hr/da; 3 da/yr.

Environmental Release. E. I. du Pont claims that there will be no release to the environment of the PMN substance.

[FR Doc. 80-19505 Filed 6-27-80; 8:45 am]
BILLING CODE 6560-01-M

[FRL 1527-4]

General Tire & Rubber Co.; Ashtabula, Ohio

In the matter of applicability of Title 1, Part A, Section 112 of the Clean Air Act, as amended, 42 U.S.C. 7412 *et seq.*, and the Federal regulations promulgated thereunder at 40 CFR Part 61, Subpart A (38 FR 8826, April 6, 1973) for National Emission Standards for Hazardous Air Pollutants (NESHAPS), to the General Tire and Rubber Company in Ashtabula, Ohio.

On February 11, 1980, the General Tire and Rubber Company submitted an application to the U.S. Environmental Protection Agency (U.S. EPA), Region V office, for an approval to install a 6000 gallon reactor at their facility in Ashtabula, Ohio. The application was submitted pursuant to 40 CFR Section 61. On May 5, 1980, the General Tire and Rubber Company was notified that its application was complete and approval to install was granted.

This approval to install does not relieve the General Tire and Rubber Company of the responsibility to comply with any applicable Federal, State or local regulations.

This determination may now be considered final agency action which is locally applicable under Section 307(b)(1) of the Act and therefore a petition for review may be filed in the U.S. Court of Appeals for the Seventh Circuit by any appropriate party. In accordance with 307(b)(i), petitions for review must be filed sixty days from the date of the notice.

For further information contact Eric Cohen, Chief, Compliance Section, Region V, U.S. EPA, 230 South Dearborn Street, Chicago, Illinois 60604, (312) 353-2090.

Dated: June 16, 1980.

John McGuire,

Regional Administrator, Region V.

[FR Doc. 80-19506 Filed 6-27-80; 8:45 am]
BILLING CODE 6560-01-M

[OPTS-51078 FRL 1527-8]

Resin From Tall Oil Fatty Acids, Trimethylolpropane, Trimethylolethane, Phthalic Anhydride, and Benzoic Acid; Premanufacture Notice

AGENCY: Environmental Protection Agency (EPA).

ACTION: Notice.

SUMMARY: Section 5(a)(1) of the Toxic Substances Control Act (TSCA) requires any person who intends to manufacture or import a new chemical substance to submit a premanufacture notice (PMN) to EPA at least 90 days before manufacture or import commences. Section 5(d)(2) requires EPA to publish in the Federal Register certain information about each PMN within 5 working days after receipt. This Notice announces receipt of a PMN and provides a summary.

DATE: Written comments by July 28, 1980.

ADDRESS: Written comments to: Document Control Officer (TS-793), Office of Pesticides and Toxic Substances, Environmental Protection Agency, 401 M St., SW, Washington, DC 20460, 202-755-8050.

FOR FURTHER INFORMATION CONTACT: Ms. Linda Smith, Premanufacturing Review Division (TS-794), Office of Pesticides and Toxic Substances, Environmental Protection Agency, 401 M St., SW, Washington, DC 20460, 202/426-3980.

SUPPLEMENTARY INFORMATION: Section 5(a)(1) of TSCA requires any person who intends to manufacture or import a new chemical substance to submit a PMN to EPA at least 90 days before manufacture or import commences. A "new" chemical substance is any substance that is not on the Inventory of existing substances compiled by EPA under Section 8(b) of TSCA. EPA first published the Initial Inventory on June 1, 1979. Notice of availability of the Initial Inventory was published in the Federal Register of May 15, 1979 (44 FR 28558). The requirement to submit a PMN for new chemical substances manufactured or imported for commercial purposes became effective on July 1, 1979.

EPA has proposed premanufacture notification rules and forms in the Federal Register issues of January 10, 1979 (44 FR 2242) and October 16, 1979 (44 FR 59764). These regulations, however, are not yet in effect. Interested persons should consult the Agency's Interim Policy published in the Federal Register of May 15, 1979 (44 FR 28564) for guidance concerning premanufacture notification requirements prior to the effective date of these rules and forms. In particular, see page 28567 of the Interim Policy.

A PMN must include the information listed in Section 5(d)(1) of TSCA. Under section 5(d)(2) EPA must publish in the Federal Register nonconfidential information on the identity and uses of the substance, as well as a description of any test data submitted under section 5(b). In addition, EPA has decided to publish a description of any test data submitted with the PMN and EPA will publish the identity of the submitter unless this information is claimed confidential.

Publication of the section 5(d)(2) notice is subject to section 14 concerning disclosure of confidential information. A company can claim confidentiality for any information submitted as part of a PMN. If the company claims confidentiality for the specific chemical identity or use(s) of the chemical, EPA encourages the submitter to provide a generic use description, a nonconfidential description of the potential exposures from use, and a generic name for the chemical. EPA will publish the generic name, the generic use, and the potential exposure descriptions in the Federal Register.

If no generic use description or generic name is provided, EPA will develop one and after providing due notice to the submitter, will publish an amended Federal Register notice. EPA immediately will review confidentiality claims for chemical identity, chemical use, the identity of the submitter, and for health and safety studies. If EPA determines that portions of this information are not entitled to confidential treatment, the Agency will publish an amended notice and will place the information in the public file, after notifying the submitter and complying with other applicable procedures.

After receipt, EPA has 90 days to review a PMN under section 5(a)(1). The section 5(d)(2) Federal Register notice indicates the date when the review period ends for each PMN. Under section 5(c), EPA may, for good cause, extend the review period for up to an additional 90 days. If EPA determines that an extension is necessary, it will publish a notice in the Federal Register.

Once the review period ends, the submitter may manufacture the substance unless EPA has imposed restrictions. When the submitter begins to manufacture the substance, he must report to EPA, and the Agency will add the substance to the Inventory. After the substance is added to the Inventory, any company may manufacture it without providing EPA notice under section 5(a)(1)(A).

Therefore, under the Toxic Substances Control Act, a summary of the data taken from the PMN is published herein.

Interested persons may, on or before July 28, 1980, submit to the Document Control Officer (TS-793), Rm. E-447, Office of Pesticides and Toxic Substances, 401 M St., SW, Washington, DC 20460, written comments regarding this notice. Three copies of all comments shall be submitted, except that individuals may submit single copies of comments. The comments are to be identified with the document control number "[OPTS-51078]" and the PMN number "PMN-80-131". Comments received may be seen in the above office between 8:00 a.m. and 4:00 p.m., Monday through Friday, excluding holidays.

(Sec. 5, 90 Stat. 2012 (15 U.S.C. 2604)).

Dated: June 20, 1980.

Warren Muir,

Acting Deputy Assistant Administrator for Chemical Control.

PMN 80-126

Close of Review Period. August 27, 1980.

Manufacture's Identity. International Minerals & Chemical Corp., Mundelein, IL 60060.

Specific Chemical Identity. Resin from tall oil fatty acids trimethylolpropane, trimethylolethane, phthalic anhydride, and benzoic acid.

The following summary is taken from the data submitted by the manufacturer in the PMN.

Use. The substance is intended for use as a vehicle for farm implement paints.

Production Estimates. Approximately 135,000 pounds per year.

Physical Properties of the Resin:

Acid number: 15 maximum.
Melting point: Unknown.
Physical state: Semi-solid or liquid.
Color: 6 maximum (Gardner).
Vapor pressure: Unknown.
Partition coefficient: Unknown

Toxicity Data. The manufacturer claims that there are no data on the product; however, he states, that since it is a polymeric material, it is most unlikely to present a hazard from a toxicity standpoint. Data available on the starting materials:

Trimethylolethane

Acute oral toxicity (mouse): $LDL_0 > 5g/kg$.
Acute intraperitoneal toxicity (mouse: $LDL_0 > 5g/kg$.
Primary skin irritation (rabbit): Mildly irritating.
Primary eye irritation (rabbit): Non-irritating.

Phthalic anhydride

Acute oral toxicity (rat): LD_{50} 4,020 mg/kg.

Acute oral toxicity (guinea pig): LDL_0 100 mg/kg.
Primary skin irritation (rabbit): Mildly irritating.
Primary eye irritation (rabbit): Severely irritating.

Benzoic acid

Acute oral toxicity (human): LDL_0 500 mg/kg.
Acute oral toxicity (rat): LD_{50} 2,530 mg/kg.
Primary skin irritation (human): Moderately irritating.
Primary skin irritation (rabbit): Mildly irritating.
Primary eye irritation (rabbit): Severely irritating.

Exposure. Manufacture. Two to three people may be exposed for about one-half to two hours each, seven times a year.

Consumer. Substance will be sold to one commercial customer. Worker exposure is unknown.

Disposal. The manufactuer only anticipates the need for disposal as a result of a spill. In case of a spill, the product will be absorbed by a mineral absorbent and removed to an approved chemical waste disposal site. Disposal of waste byproduct will be by an approved commercial chemical waste removal service.

[FR Doc. 80-19506 Filed 6-27-80; 8:45 am]
BILLING CODE 6560-01-M

FEDERAL COMMUNICATIONS COMMISSION

[BC Docket No. 80-298, File No. BPCT-5237; BC Docket No. 80-299, File No. BPCT-5166; BC Docket No. 80-300, File No. BPCT-5206]

APW Enterprises, Inc., etc.; Designating Applications for Consolidated Hearing for a Construction Permit for a New Television Station

Hearing Designation Order

Adopted: June 12, 1980.
Released: June 24, 1980.

In re Applications of APW Enterprises, Inc., Grand Rapids, Michigan; TV 17 Unlimited, Inc., Grand Rapids, Michigan; Good News Broadcasting, Inc., Grand Rapids, Michigan; for a Construction Permit for a New Television Station.

By the Chief, Broadcast Bureau

1. The Commission, by the Chief, Broadcast Bureau, acting pursuant to delegated authority, has under consideration the above captioned mutually exclusive applications filed by APW Enterprises, Inc. (APW), Good News Broadcasting, Inc. (Good News), and Channel 17 Unlimited (17) for a construction permit for a new commercial television station to operate on Channel 17, Grand Rapids, Michigan.

2. *APW Enterprises, Inc.* An engineering proposal which utilizes a tower over 300 feet above ground level must be accompanied by an environmental narrative statement. 47 C.F.R. 1.1305(a)(2). Although the applicant's engineering exhibits indicate that its proposed antenna will be 995 feet above ground level, it did not include a NEPA statement. Accordingly, we will provide that, within 30 days of the date of release of this Order, APW Enterprises, Inc., will file an environmental narrative statement.

3. *Good News Broadcasting, Inc.* Stuart Noordyk, President and majority stockholder of Good News Broadcasting, Inc., is the licensee of WYGR, Wyoming, Michigan, and WSHN(AM) and WSHN-FM, Freemont, Michigan. Since Freemont, Wyoming and Grand Rapids are within 100 miles of each other and the proposed city grade contour would overlap WSHN and WSHN-FM's contours, the proposal would violate Section 73.636(a)(2) of the Rules. However, Mr. Noordyk has indicated, in his letter of April 24, 1980, that he will enter into an agreement to sell his broadcast interests in Freemont and Wyoming to corporations in which he has no interest. A grant of the applicant's construction permit will be conditioned upon the principals of Good News divesting themselves of all interest in, and connection wtih, WYGR and WSHN(AM) and WSHN-FM.

4. Except as indicated by the issues specified below, the applicants are qualified to construct and operate as proposed. However, since the proposals are mutually exclusive, they must be designated for hearing in a consolidated proceeding on the issues specified below.

5. Accordingly, It Is Ordered, That, pursuant to Section 309(e) of the Communications Act of 1934, as amended, the applications Are Designated For Hearing In a Consolidated Proceeding, at a time and place and before an Administrative Law Judge to be specified in a subsequent Order, upon the following issues:

1. To determine, which of the proposals would, on a comparative basis, best serve the public interest.

2. To determine, in the light of the evidence adduced pursuant to the foregoing issue, which of the applications should be granted.

6. It Is Further Ordered, that in the event APW Enterprises' application is granted, operation of the station shall not be commenced until all of its principals have divested all of their interest in and connection with WYGR, WSHN, and WSHN(FM).

7. It Is Further Ordered, That if the application of APW Enterprises, Inc., is granted, such grant shall be subject to the condition that authority to operate with effective radiated power in excess of 1000 Kw is subject to consent by Canada.

8. It Is Further Ordered, That, within 30 days of the date of release of this Order, APW Enterprises, Inc., SHALL FILE with the Commission an Environmental narrative statement as required by Section 1.1311 of the Commission's Rules.

9. Ir Is Further Ordered, That, to avail themselves of the opportunity to be heard, the applicants herein shall, pursuant to Section 1.221(c) of the Commission's Rules, in person or by attorney, within 20 days of the mailing of this Order, file with the Commission in triplicate a written appearance stating an intention to appear on the date fixed for the hearing and to present evidence on the issues specified in this Order.

10. It Is Further Ordered, That the applicants herein shall, pursuant to Section 311(a)(2) of the Communications Act of 1934, as amended, and Section 73.3594 of the Commission's Rules, give notice of the hearing (either individually or, if feasible and consistent with the Rules, jointly) within the time and the manner prescribed in such Rule, and shall advise the Commission of the publication of such notice as required by Section 73.3594(g) of the Rules.

Federal Communications Commission.
Richard J. Shiben,
Chief, Broadcast Bureau.

Signed by:
Jerold L. Jacobs,
Chief, Broadcast Facilities Division.

[FR Doc. 80-19578 Filed 6-27-80; 8:45 am]
BILLING CODE 6712-01-M

[BC Docket No. 80-301, File No. BPCT-5019; BC Docket No. 80-302, File No. BPCT-5135]

Buford Television of Missouri, Inc.; SelecTV of Kansas City, Inc.; Designating Applications for Consolidated Hearing

Hearing Designation Order

Adopted: June 12, 1980.
Released: June 26, 1980.

In re Applications of Buford Television of Missouri, Inc., Kansas City, Missouri; Selectv of Kansas City, Inc., Kansas City, Missouri; for a Construction Permit.

By the Chief, Broadcast Bureau:

1. The Commission, by the Chief, Broadcast Bureau, acting pursuant to delegated authority, has before it the above-captioned mutually exclusive applications of Buford Television of Missouri, Inc. (Buford) and SelecTV of

Kansas City, Inc. (SelecTV) for a new commercial television station to operate on Channel 62, Kansas City, Missouri.[1]

2. It appears that SelecTV would require more than $1,200,000 to construct its proposed facility:

Antenna System	$215,260
RF Generating Equipment	407,580
Monitoring and Test Equipment	21,000
Program Origination Equipment	480,000
Land	50,000
Buildings	50,000
Total	$1,223,840

To meet this requirement, SelecTV intends to rely on American Subscription Television of Kansas City, Inc. (American STV) to purchase or lease the land, buildings equipment, and furnishings and to re-lease them to SelecTV.[2] Absent a balance sheet, it cannot be determined that American STV has liquid assets in excess of currrent liabilities to provide any capital for the proposed station. Because the availability of land, buildings equpment, and furnishings to SelecTV cannot be determined, an appropriate financial issue will be specified.

3. Because the monthly rentals (including interst payments) cannot be ascertained, SelecTV's proposed operating costs for three months cannot be accurately determined, although the applicant budgets $124,500 for operating expenses and $45,000 for legal, engineering, and other costs. To meet these operating costs, SelecTV relies on $10,000 existing capital and minimum of $600,000 from the sale of program time to American STV, the proposed franchise-holder. Because applicants are required to demonstrate "sufficient capital to construct the station and then operate for 90 days without advertising or other broadcast revenue, "*New Financial Qualifications Standard for Broadcast Television Applicants,* 45 RR 2d 925 (1979), it cannot be determined that SelecTV's existing capital would be sufficient to meet its proposed expenses. Accordingly, appropriate financial issues will be specified.

4. Since Buford's and SelecTV's applications are mutually exclusive, the Commission is unable to make the statutory finding that grant of the applications will serve the public interest, convenience, and necessity. Therefore, the applicantions must be disignated for hearing in a consolidated proceeding on the issues set out below.

5. Accordingly, it is ordered, That, pursuant to Section 309(e) of the Communications Act of 1934, as amended, the above-captioned applications are designated for hearing in a consolidated proceeding to be held before an Administrative Law Judge at a time and place to be specified in a subsequent Order, upon the following issues:

1. To determine with respect to SelecTV's financial showing:

(a) Whether SelecTV has reasonable assurance from American STV of the availability of land, buildings, equipment, and furnishings as proposed.

(b) The cost of renting land, buildings, equipment, and furnishings as proposed for three months.

(c) Whether SelectTV has liquid assets in excess of current liabilities to meet its three month construction and operation costs.

(d) Whether, in light of the evidence adduced pursuant to (a), (b), and (c) above, the applicant is financially qualified.

2. To determine which of the proposals would, on a comparative basis, better serve the public interest.

3. To determine, in light of the evidence adduced prusuant to the foregoing issues, which of the applications should be granted.

6. It is further ordered, That to avail themselves of the opportunity to be heard, the applicants herein shall, pursuant to Section 1.221(c) of the Commission's Rules, in person or by attorney within 20 days of the mailing of this Order, file with the Commission in triplicate a written appearance stating an intention to appear on the date fixed for hearing and to present evidence on the issues specified in this Order.

7. It is further ordered, That the applicants herein shall, prusuant to Section 311(a)(2) of the Communications Act of 1934, as amended, and Section 73.3594 of the Commission's Rules, give notice of the hearing within the time and in the manner prescribed in such Rule, and shall advise the Commission of the publication of such notice as required by Section 73.3594(g) of the Rules.

Federal Communications Commission.

Richard J. Shiben

Chief, Broadcast Bureau.

Signed by:

Jerold L. Jacobs,

Chief, Broadcast Facilities Division.

[FR Doc. 80-19577 Filed 6-27-80; 8:45 am]

BILLING CODE 6712-01-M

[1] The applications of both Buford and SelecTV contemplate operating subscription television (STV) over their proposed facilities. Although both have applications for STV authorizations pending before the Commission, they will not be consolidated for hearing in this proceeding. STV is essentially an entertainment format undistinguishable from other entertainment packages except that it is supported directly by viewers' subscriptions rather than by advertising revenues. The Commission has already demonstrated a reluctance to compare applicants on the basis of entertainment formats. *George E. Cameron, Jr. Communications,* 71 F.C.C. 2d 460 (1979). Consequently, STV proposals will not be considered in othewise routine hearings on applications for television construction permits; rather, the appropriate STV proposal will be analyzed after a determination of the successful applicant for a construction permit is made.

[2] The sum to be paid in rent under this lease would be equal to American STV's costs plus interest at the rate of three percentage points above the prime interest rate.

[BC Docket No. 80-289, File No. BPCT-4981; BC Docket No. 80-290, File No. BPCT-5007]

Buford Television of Maryland, Inc.; Jesus Lives, Inc., Designating Applications for Consolidated Hearing for Construction Permit for a Commercial Television Broadcast Station

Hearing Designation Order

Adopted: June 12, 1980.
Released: June 25, 1980.

In re Applications of Buford Television of Maryland, Inc., Baltimore, Maryland; Jesus Lives, Inc., Baltimore, Maryland; for construction permit for a new commercial television broadcast station.

1. The Commission, by the Chief, Broadcast Bureau, acting pursuant to delegated authority, has under consideration the above-captioned mutually exclusive applications, filed by Buford Television of Maryland, Inc. (Buford) and Jesus Lives, Inc. (JLI) for a new commercial television station on channel 24 Baltimore, Maryland. See Section 0.281(a)(11)(i) of the Commission's Rules.

2. The application of Buford comtemplates operating subscription television (STV) over its proposed facilities. While this party has an application for STV authorization pending before the Commission, the STV application will not be consolidated for hearing in this proceeding. STV is essentially an entertainment format indisinguishable from other entertainment packages except that it is supported directly by viewers' subscriptions rather than by advertising revenues. Accordingly, the Commission's reluctance to compare applicants on the basis of entertainment formats expressed in *George E. Cameron, Jr. Communications,* 71 FCC 2d 460 (1979), provides ample precedent for precluding consideration of STV proposals in otherwise routine hearings on applications for television construction permits.

3. Except as indicated in the issues specified below,[1] the Commission finds Buford Television of Maryland, Inc. and Jesus Lives, Inc. legally, financially, technically and otherwise qualified to operate as proposed. Since these applications are mutually exclusive, they must be designated for hearing in a consolidated proceeding on the issues set out below.

4. Accordingly, it is ordered That, pursuant to Section 309(e) of the Communications Act of 1934, as amended, the applications are designated for hearing in a consolidated proceeding, to be held before the Administrative Law Judge at a time and place to be specified in a subsequent Order, upon the following issues:

1. To determine which of the proposals would, on a comparative basis, better serve the public interest.

2. To determine, in light of the evidence adduced pursuant to the foregoing issues which of the applications should be granted.

6. It is further ordered, That to avail themselves of the opportunity to be heard, the applicants herein shall, pursuant to Section 1.221(c) of the Commission's Rules, in person or by attorney within 20 days of the mailing of this Order, file with the Commission, in triplicate, a written appearance stating an intention to appear on the date fixed for the hearing and to present evidence on the issues specified in this Order.

7. It is further ordered, That the applicants herein shall, pursuant to Section 311(a)(2) of the Communications Act of 1934, as amended, and Section 73.3594 of the Commission's Rules, give notice of the hearing within the time and in the manner prescribed in such Rule, and shall advise the Commission of the publication of such notice as required by Section 73.3594(g) of the Rules.

Federal Communications Commission.

Richard J. Shiben,

Chief, Broadcast Bureau.

Signed by:

Jerold L. Jacobs,

Chief, Broadcast Facilities Division.

[FR Doc. 80-19574 Filed 6-27-80; 8:45 am]

BILLING CODE 6712-01-M

[1] A petition to Specify Issues was filed by JLI on July 22, 1977 and an Opposition to that petition was filed by Buford on September 13, 1977. Although proper when filed, current Commission rules permit such pleadings only after designation for comparative hearing. *Revised Procedures for Processing of Contested Broadcast Applications*, 72 FCC 2d 202 (1979). The petition and the opposition are not considered at this time.

[BC Docket No. 80-310, File No. BPH-780828AB; BC Docket No. 80-311, File No. BPH-780831AH; BC Docket No. 80-312, File No. BPH-780831AI]

Fox River Broadcasting, Inc., etc.; Designating Applications for Consolidated Hearing for Construction Permit

In re Applications of Fox River Broadcasting, Inc., De Pere, Wisconsin, Req: 95.9 MHz, Channel No. 240 3.0 kW (H&V), 300 feet De Pere Broadcasting, Inc., De Pere, Wisconsin, Req: 95.9 MHz, Channel No. 240 3.0 kW (H&V), 300 feet Jon A. Le Duc d.b.a. American Communications Co. De Pere, Wisconsin, Req: 95.9 MHz, Channel No. 240 3.0 kW (H&V), 300 feet For Construction Permit.

Hearing Designation Order

Adopted: June 5, 1980.

Released: June 26, 1980.

1. The Commission, by the Chief, Broadcast Bureau, acting pursuant to delegated authority, has under consideration the above-captioned mutually exclusive applications.

2. None of the applicants will be able to provide a 3.16 mV/m signal to the entire city of De Pere as required by Section 73.315(a) of the Commission's Rules. Each of the applicants' predicted 70 dBu contours will cover over 96 percent of the area of De Pere and over 99 percent of the population. Since the areas and populations not covered by De Pere Broadcasting, American, and Fox River are de minimis, the Commission finds that a waiver of Section 73.315(a) is warranted for these applications.

3. Since no determination has been reached that the antenna proposed by De Pere Broadcasting would not constitute a menance to air navigation, an issue regarding this matter is required.

4. Except as indicated by the issues specified below, the applicants are qualified to consturct and operate as proposed. However, since the proposals are mutually exclusive, they must be designated for hearing in a consolidated proceeding.

5. Accordingly, it is ordered, That, pursuant to Section 309(e) of the Communications Act of 1934, as amended, the applications are designated for hearing in a consolidated proceeding, at a time and place to be specified in a subsequent Order, upon the following issues:

1. To determine whether there is a reasonable possibility that the tower height and location proposed by De Pere Broadcasting, Inc. would constitute a hazard to air navigation.

2. To determine which of the proposals would, on a comparative basis, best serve the public interest.

3. To determine, in the light of the evidence adduced pursuant to the foregoing issues, which of the applications should be granted.

6. It is further ordered, That the Federal Aviation Administration is made a party to the proceeding.

7. It is further ordered, That the requests of the above applicants for a waiver of the provisions of Section 73.315(a) of the Commission's Rules are granted.

8. It is further ordered, That the petition for leave to amend filed by American is granted, and the corresponding amendment is accepted.

9. It is further ordered, That, to avail themselves of the opportunity to be heard, the applicants herein shall, pursuant to Section 1.221(c) of the Commission's Rules, in person or by attorney, within 20 days of the mailing of this Order, file with the Commission in triplicate a written appearance stating an intention to appear on the date fixed for the hearing and to present evidence on the issues specified in this Order.

10. It is further ordered, That the applicants herein shall, pursuant to Section 311(a)(2) of the Communications Act of 1934, as amended, and Section 73.3594 of the Commission's Rules, give notice of the hearing (either individually or, if feasible, jointly) within the time and in the manner prescribed in such Rule, and shall advise the Commission of the publication of such notice as required by Section 73.3594 of the Rules.

Federal Communications Commission.

Richard J. Shiben,

Chief, Broadcast Bureau.

Signed by: Jerold L. Jacobs,

Chief, Broadcast Facilities Division.

[FR Doc. 80-19579 Filed 6-27-80; 8:45 am]

BILLING CODE 6712-01-M

[BC Docket No. 80-291 File No. BPH-780818AG; BC Docket No. 80-292, File No. BPH-790117AL]

Korral Radio, Inc., Energy Enterprises, Inc.; Order Designating Applications for Consolidated Hearing for Construction Permit for a New FM Station

Hearing Designation Order

Adopted: June 4, 1980.

Released: June 26, 1980.

In re Applications of Korral Radio, Inc., Rawlins, Wyoming, Req: 92.7 MHz, Channel 224 3 kW(H&V), 102 feet;

Energy Enterprises, Inc., Rawlins, Wyoming, Req: 92.7 MHz, Channel 224 3 kW(H&V), 300 feet for construction permit for a new FM station.

1. The Commission, by the Chief, Broadcast Bureau, acting pursuant to delegated authority, has under consideration the above-captioned mutually exclusive applications filed by Korral Radio, Incorporated (Korral) and Energy Enterprises, Inc. (Energy).

2. *Korral.* Analysis of the financial data submitted by Korral reveals that $21, 084 will be required to construct the proposed station and operate for three months, itemized as follows:

Equipment down payment	$1,418
Equipment payments	2,836
Miscellaneous	9,000
Operating costs (three months)	7,830
Total	$21,084

Applicant plans to lease equipment but since it has not submitted an equipment supplier letter, actual costs may be higher than proposed. Korral plans to finance construction and operation with $15,000 in cash and $16,000 in profits from applicant's AM station, KRAL. The applicant, having had a 100% change of ownership during the application process, cannot rely on the balance sheet submitted by its former principals, but rather must submit a balance sheet reflecting its current financial condition and showing current assets in excess of current liabilities. Since Korral has not submitted a new balance sheet since the change in ownership, it can only rely on $16,000, an amount insufficient to meet its proposed costs. Accordingly, a limited financial issue will be specified.

3. Data submitted by the applicants indicate that there would be a significant difference in the size of the areas and populations which would receive service from the proposals. Consequently, for the purpose of comparison, the areas and populations which would receive FM service of 1 mV/m or greater intensity, together with the availability of other primary aural services in such areas, will be considered under the standard comparative issue, for the purpose of determining whether a comparative preference should accrue to either of the applicants.

4. Except as indicated by the issues specified below, the applicants are qualified to construct and operate as proposed. However, since the proposals are mutually exclusive, they must be designated for hearing in a consolidated proceeding on the issues specified below.

5. Accordingly, it is Ordered, That, pursuant to Section 309(e) of the Communications Act of 1934, as amended, the applications are designated for hearing in a consolidated proceeding, at a time and place to be specified in a subsequent Order, upon the following issues:

1. To determine with respect to Korral:

(a) The source and availability of additional funds over and above the $16,000 indicated; and

(b) whether in light of the evidence adduced pursuant to (a), above, the applicant is financially qualified.

2. To determine which of the proposals would, on a comparative basis, better serve the public interest.

3. To determine, in the light of the evidence adduced pursuant to the foregoing issues, which of the applications, if either, should be granted.

6. It is further ordered, That, to avail themselves of the opportunity to be heard, the applicants herein shall, pursuant to Section 1.221(c) of the Commission's Rules, in person or by attorney, within 20 days of the mailing of this Order, file with the Commission in triplicate a written appearance stating an intention to appear on the date fixed for the hearing and to present evidence on the issues specified in this Order.

7. It is further ordered, That the applicants herein shall, pursuant to Section 311(a)(2) of the Communications Act of 1934, as amended, and Section 73.3594(g) of the Commission's Rules, give notice of the hearing (either individually or, if feasible and consistent with the Rules, jointly) within the time and in the manner prescribed in such Rule, and shall advise the Commission of the publication of such notice as required by Section 73.3594(g) of the Rules.

Federal Communications Commission.

Richard J. Shiben,

Chief, Broadcast Bureau.

Signed by:

Jerold L. Jacobs,

Chief, Broadcast Facilities Division.

[FR Doc. 80-19575 Filed 6-27-80; 8:45 am]

BILLING CODE 6712-01-M

[BC Docket No. 80-305, File No. BPH-781023AN; BC Docket No. 80-306, File No. BPH-790327AB; BC Docket No. 80-307, File No. BPH-790328AQ]

KBIZ, Inc. etc.; Order Designating Applications for Consolidated Hearing for a Construction Permit for a New FM Station

Adopted: June 11, 1980.

Released: June 26, 1980.

In re Applications of KBIZ, Inc., Ottumwa, Iowa Req: 92.7 MHz, Channel 224A 3 kW (H&V), 293 feet Audrey G. Osmundson, Mark K. Osmundson and Jean O. Rother dba Ottumwa Broadcasting Co., Ottumwa, Iowa Req: 92.7 MHz, Channel 224A 3 kW (H&V), 300 feet Iowa Communications Co., Ottumwa, Iowa Req: 92.7 MHz, Channel 224A 3 kW (H&V), 300 feet for a construction permit for a new FM station.

1. The Commission, by the Chief, Broadcast Bureau, acting pursuant to delegated authority, has under consideration the above-captioned mutually exclusive applications of Kbiz, Inc. (Kbiz), Audrey G. Osmundson, Mark K. Osmundson and Jean O. Rother dba Ottumwa Broadcasting Company (Ottumwa), and Iowa Communications Company (ICC).

2. *KBIZ.* Applicants for new broadcast stations are required by Section 73.3580(f) of the Commission's Rules to give local notice of the filing of their applications. They must then file with the Commission the statement described in Section 73.3580(h) of the Rules. KBIZ did not include in its public notice a listing of all officers, directors and 10% stockholders of the corporation. KBIZ also failed to indicate the location of its proposed transmitter site. To remedy these deficiencies, KBIZ will be required to republish local notice of its application and to file a statement of republication with the presiding Administrative Law Judge.

3. KBIZ's total financial requirements are $95.510, itemized as follows:

Equipment	$54,510
Buildings	2,000
Miscellaneous (including minimum of $5,000 legal fees)	9,000
Operating costs (three months)	30,000
Total	95,510

The applicant proposes to finance its proposal with $442,588 in existing capital and $55,000 in profits from existing operations. The entire amount of existing capital, however, is not specifically documented nor does KBIZ demonstrate an ability to liquidate any part of this figure. For example, the applicant does not mention whether the existing capital is available from its parent, the Post Corporation. In addition, the applicant's balance sheet has several deficiencies. Liabilities are not listed nor does the applicant state that it has no liabilities. Therefore, we cannot find that it can use the $23,641 in cash for the construction and operation of the proposed station. Also, KBIZ shows $65,801 in net accounts receivable but fails to document this figure. We can, however, give the applicant credit for one-fourth of its profits from existing operations, or $13,750, computing the financial qualifications on a three-month

operating basis. KBIZ has, therefore, shown only $13,750 available to meet a requirement of $95,510. Accodingly, a limited financial issue will be specified.

4. Ottumwa and ICC propose independent programming while KBIZ proposes to duplicate some of the programming of its commonly owned AM station, KBIZ. Therefore, evidence regarding program duplication will be admissible under the standard comparative issue. When duplicated programming is proposed, the showing permitted will be limited to evidence concerning the benefits to be derived from the proposed duplication which would offset its inefficiency. *Jones T. Sudbury*, 8 FCC 2d 360, 10 RR 2d 114(1967).

5. *Ottumwa.* The applicant has not provided a balance sheet for the partnership as required by FCC Form 301, Section III, paragraph 2(a). Ottumwa states that it has $30,000 in existing capital which presumably includes $36,000 in cash possessed by the individual partners. Ottumwa, however, fails to provide any contracts by which the partners will lend funds to the partnership or any balance sheets of the three partners by which we can determine their ability to make this contribution. Accordingly, a general financial issue will be specified.

6. *Other issues.* Data submitted by the applicants indicated that there would be a significant difference in the size of the populations which would receive service from the proposals. Consequently, for the purpose of comparison, the populations which would receive FM service of 1 mV/m or greater strength, together with availability of other primary aural services in such areas, will be considered under the standard comparative issue for the purpose of determining whether a comparative preference should accrue to any of the applicants.

7. Except as indicated by the issues specified below, the applicants are qualified to construct and operate as proposed. However, since the proposals are mutually exclusive, they must be designated for hearing in a consolidated proceeding on the issues specified below.

8. Accordingly, it is ordered, That, pursuant to Section 309(e) of the Communications Act of 1934, as amended, the applications are designated for heating in a consolidated proceeding, at a time and place to be specified in a subsequent Order, upon the following issues:

1. To determine with respect to KBIZ, Inc., (a) the source and availability of additional funds over and above the $13,750 indicated; and (b) whether, in light of the evidence adduced pursuant to (a) above, the applicant is financially qualified.

2. To determine whether Audrey G. Osmundson, Mark K. Osmundson and Jean O. Rother dba Ottumwa Broadcasting Company is financially qualified to construct and operate the proposed station.

3. To determine which of the proposals would, on a comparative basis best serve the public interest.

4. To determine, in light of the evidence adduced pursuant to the foregoing issues, which of the applications should be granted.

9. It is further ordered, That KBIZ file a statement of publication of local notice of its application with the presiding Administrative Law Judge remedying the deficiencies discussed above, in accordance with Section 73.3580(f) of the Commission's Rules.

10. It is further ordered, That, to avail themselves of the opportunity to be heard, the applicants herein shall, pursuant to Section 1.221(c) of the Commission's Rules, in person or by attorney, within 20 days of the mailing of this Order, file with the Commission in triplicate a written appearance stating an intention to appear on the date fixed for the hearing and to present evidence on the issues specified in this Order.

11. It is further ordered, That the applicants herein shall, pursuant to Section 311(a)(2) of the Communications Act of 1934, as amended, and Section 73.3594(g) of the Commission's Rules, give notice of the hearing (either individually or, if feasible and consistent with the Rules, jointly) within the time and in the manner prescribed in such Rule, and shall advise the Commission of the publication of such notice as required by Section 73.3594(g) of the Rules.

Federal Communications Commission.

Richard J. Shiben,

Chief, Broadcast Bureau.

Signed by:

Jerold L. Jacobs,

Chief, Broadcast Facilities Division.

[FR Doc. 80-19578 Filed 6-27-80; 8:45 am]

BILLING CODE 6712-01-M

Otter Tail Promotions, Inc., etc., Order Designating Applications for Consolidated Hearing; for a construction Permit for a New FM Station

[BC Docket No. 80-313, File No. BPH-790112AE, BC Docket No. 80-314, File No. BPH-790117AI; BC Docket No. 80-315, File No. BPH-790530AC]

Adopted: June 11, 1980.

Released: June 26, 1980.

In re Applications of Otter Tail Promotions, Inc., Fergus Falls, Minn., Req: 96.5 MHz, Channel 243C, 100 kW (H&V), 551.5 feet; Lake Region Media, Inc., Fergus Falls, Minn., Req: 96.5 MHz, Channel 243C, 100 kW (H&V), 475 feet; Olmsted County Broadcasting Company, Fergus Falls, Minn., Req: 96.5 MHz, Channel 243C, 100 kW (H&V), 439 feet.

1. The Commission, by the Chief, Broadcast Bureau, acting pursuant to delegated authority, has under consideration the above-captioned mutually exclusive applications of Otter Tail Promotions, Inc. (Otter Tail), Lake Region Media, Inc. (Lake Region), and Olmsted County Broadcasting Company (Olmsted).

2. *Otter Tail.* The Small Business Administration has agreed to guarantee 90% of Otter Tail's $150,000 loan from the Northwestern National Bank of Fergus Falls. The guarantee is conditioned upon the SBA receiving a first security interest pursuant to the Minnesota Commercial Code on, for example, station machinery, equipment, inventory and contract rights. The bank, however, and the equipment supplier also demand a security interest in the applicant's same tangible and intangible assets. An appropriate issue will, therefore be specified in order to determine whether the SBA loan guarantee is available.

3. *Lake Region.* A limited ascertainment issue will be specified. Although the applicant indicates that 3% of the population in its proposed service area is Indian, it has not correspondingly shown that it interviewed leaders of the Indian community in Fergus Falls. Second, the applicant has not stated the time segments during which it plans to air its proposed programming, in accordance with Question and Answer 29 of the *Primer on Ascertainment of Community Problems by Broadcast Applicants*, 27 FCC 2d 650 (1971).

4. *Other matters.* Data submitted by the applicants indicate that there would be a significant difference in the size of the areas which would receive service from the proposals, consequently, for the

purpose of comparison, the areas which would receive FM service of 1 mV/m or greater intensity, together with the availability of other primary aural services in such areas, will be considered under the standard comparative issue, for the purpose of determining whether a comparative preference should accrue to any of the applicants.

5. On May 6, 1980, after the April 7, 1980 date for amending its application as of right, Otter Tail submitted on amendment stating that John Ringdahl, a principal, intends to sever his relationship with station KDDR, Oakes, North Dakota, after receiving a construction permit for a new FM station in Fergus Falls. Ringdahl's amendment supplemented a similar statement filed by other Other Tail principals on April 7, 1980. Olmsted objected to the filing of the May 6 amendment, claiming that Otter Tail was improving its comparative position under the diversity of ownership criterion after the date for amending as of right had expired. We agree with Olmsted in accordance with *Cypress Communications, Inc.*, 47 RR 2d 132 (Broadcast Bureau 1980) and accordingly deny Otter Tail's May 6, 1980 petition for leave to amend.

6. Except as indicated by the issues specified below, the applicants are qualified to construct and operate as proposed. However, since the proposals are mutually exclusive, they must be designated for hearing in a consolidated proceeding on the issues specified below.

7. Accordingly, It is Ordered, That, pursuant to Section 309(e) of the Communications Act of 1934, as amended, the applications are designated for Hearing in a Consolidated Proceeding, at a time and place to be specified in a subsequent Order, upon the following issues:

1. To determine whether the Small Business Administration's guarantee of Otter Tail's loan from the northwestern Bank is available in view of the identical security interests claimed by both the bank, the equipment supplier, and the SBA in the applicant's tangible and intangible assets.

2. To determine with respect to Lake Region's efforts to ascertain the needs and interests of the proposed service area:

(a) whether the applicant interviewed any Indian community leaders; and

(b) whether the applicant indicated the time segments during which it plans to air its proposed programming.

3. To determine which of the proposals would, on a comparative basis, best serve the public interest.

4. To determine, in the light of the evidence adduced pursuant to the foregoing issues, which of the applications, should be granted.

8. It is Further Ordered, That Otter Tail's May 6, 1980 petition for leave to amend is denied.

9. It is Further Ordered, That, to avail themselves of the opportunity to be heard, the applicants herein shall, pursuant to Section 1.221(c) of the Commission's Rules, in person or by attorney, within 20 days of the mailing of this Order, file with the Commission in triplicate a written appearance stating an intention to appear on the date fixed for the hearing and to present evidence on the issues specified in this Order.

10. It is further Ordered, That the applicants herein shall, pursuant to Section 311(a)(2) of the Communications Act of 1934, as amended, and Section 73.3594(g) of the Commission's Rules, give notice of the hearing (either individually or, if feasible and consistent with the Rules; jointly) within the time and in the manner proscribed in such Rule, and shall advise the Commission of the publication of such notice as required by Section 73.3594(g) of the Rules.

Federal Communications Commission.

Richard J. Shiben,

Chief, Broadcast Bureau

Signed by:

Jerold L. Jacobs,

Chief, Broadcast Facilities Division, Broadcast Bureau.

[FR Doc. 80-19573 Filed 6-27-80; 8:45 am]

BILLING CODE 6712-01-M

[Report No. B-6]

FM Broadcast Applications Accepted for Filing and Notification of Cut-Off Date

Released: June 23, 1980.

Cut-off Date: August 6, 1980.

Notice is hereby given that the applications listed in the attached appendix are accepted for filing. Because the applications listed in the attached appendix are in conflict with applications which were accepted for filing and listed previously as subject to a cut-off date for conflicting applications, no application which would be in conflict with the applications listed in the attached appendix will be accepted for filing.

Petitions to deny the application listed in the attached appendix and minor amendments thereto must be on file with the Commission not later than the close of business on August 6, 1980. Any application previously accepted for filing and in conflict with the applications listed in the attached appendix may also be amended as a matter of right not later than the close of business on August 6, 1980. Amendments filed pursuant to this notice are subject to the provisions of § 73.3572(b) of the Commission's Rules.

Federal Communications Commission.

William J. Tricarico,

Secretary.

Appendix

BPH-790518AA (WFTW), Fort Walton Beach, Florida, Vactionland Broadcasting Company, Inc., Has: 99.3 MHz; Channel No. 257A, ERP: 3 kw; HAAT: 170 Ft. (Lic), Req: 96.5 MHz; Channel No. 243C ERP: 100 kw; HAAT: 530 Ft.

BPH-790829AB (New), Cadiz, Ohio, Harrison County Broadcasting, Inc., Req: 106.3 MHz; Channel No. 292A, ERP: 3kw; HAAT: 215 Ft. (Allocated to Jewett, OH.)

BPH-790911AB (New), Fort Walton Beach, Florida, SJK, Inc., Req: 96.5 MHz; Channel No. 243C, ERP: 100 kw; HAAT: 576 Ft.

BPH-790911AC (New), Solvang, California, Sunshine Broadcasting Company, Req: 96.7 MHz; Channel No. 244A, ERP: .058 kw; HAAT: 1973 Ft.

BPH-791108AD (New), Burney, California, Merit Broadcasting Corporation, Req: 106.1 MHz; Channel No. 291C, ERP: 100 kw; HAAT: 1438 Ft.

BPH-791114AA (New), Burney, California, Smith-Shelton Broadcasters, Req: 106.1 MHz; Channel No. 291C, ERP: 50 kw; HAAT: 1461 Ft.

BPH-791114AD (New), Fort Walton Beach, Florida, Juanina, Inc., Req: 96.5 MHz; Channel No. 243C, ERP: 100 kw; HAAT: 502 Ft.

BPH-791115AB (New), Fort Walton Beach, Florida, Pinnacle Broadcasting Corporation, Req: 96.5 MHz; Channel No. 243C, ERP: 100 kw; HAAT: 573 Ft.

BPH-791115AG (New), Fort Walton Beach, Florida, KY Broadcasting, Inc., Req: 96.5 MHz; Channel No. 243C, ERP: 100 kw; HAAT: 580 Ft.

BPH-791115AH (New), Fort Walton Beach, Florida, WDGE, Inc., Req: 96.5 MHz; Channel NO. 243C, ERP: 100 kw; HAAT: 166 Ft.

BPH-791115AI (New), Fort Walton Beach, Florida, Da-Gon Broadcasting Company, Inc., Req: 96.5 MHz; Channel No. 243C, ERP: 100 kw; HAAT: 500 Ft.

BPH-791115AK (New), Burney, California, Shasta Communications Company, Req: 106.1 MHz; Channel No. 291C, ERP: 100 kw; HAAT: 1532 Ft.

BPH-791213AC (New), Solvang, California, Pacific Coast Broadcasting Co., Inc., Req: 96.7 MHz; Channel No. 244A, ERP: 3 kw; HAAT: −51 Ft.

BPH-791214AB (New), Solvang, California, Williams-Ramos Broadcasting Company, Req: 96.7 MHz; Channel No. 244A, ERP: 3 kw; HAAT: −140

BPH-791214AE (New), Laredo, Texas, Sonar Broadcasting Company, Req: 92.7 MHz; Channel No. 224A, ERP: 3 kw; HAAT: 231 Ft.

BPH-800118AH (New), Stonington, Connecticut, Stonington-Mystic Broadcasting Co., Req: 102.3 MHz; Channel No. 272A, ERP: 3 kw; HAAT: 260 Ft.
BPH-800118AI (New), Stonington, Connecticut, Shore Broadcasting, Req: 102.3 MHz; Channel No. 272A, ERP: 3 kw; HAAT: 279 Ft.
BPH-800317AF (New), Cadiz, Ohio, Cadiz Broadcasting, Inc., Req: 106.3 MHz; Channel No. 292A, ERP: 3 kw; HAAT: 264 Ft. [allocated to Jewett, OH.]
BPED-300215AN (New), St. Louis, Missouri, Women in Motion Incorporated, Req: 89.9 MHz; No. 210; 10 Watts.

[FR Doc. 80-19580 Filed 6-27-80; 8:45 am]
BILLING CODE 6712-01-M

FEDERAL MARITIME COMMISSION

Controlled Carriers Under the Shipping Act, 1916

AGENCY: Federal Maritime Commission.

ACTION: Listing of Controlled Carriers.

SUMMARY: The Federal Maritime Commission hereby lists an additional "controlled carrier" as defined by the Shipping Act, 1916, that is not totlly exempt from the provisions of the Act. This carrier is being added to the list of "controlled carriers" published in the Federal Register of January 23, 1980.

DATES: None.

FOR FURTHER INFORMATION CONTACT: Francis C. Hurney, Secretary, Federal Marine Commission, Room 11101, 1100 L Street, NW., Washington, D.C. 20573.

SUPPLEMENTARY INFORMATION: The Ocean Shipping Act of 1978 (Pub. L. 95-483) was incorporated into sections 1 and 18(c) of the Shipping Act, 1916 (46 U.S.C. 801, 817(c)) (the Act), and provides for the regulation of rates or charges by certain state-owned or controlled carriers in the foreign commerce of the United States. These provisions became effective November 17, 1978, imposing upon the Federal Maritime Commission the responsibility to regulate the rates and practices of such carriers operating as "cross-traders" in the United States ocean-borne foreign commerce.

Not all controlled carriers are subject to the regulatory requirements of Pub. L. 95-483. Section 18(c)(6) of the Act sets forth two categories of controlled carriers which are exempt from these regulatory requirements and three conditions under which controlled carriers are exempt in certain trade areas. For example, rates of controlled carriers in bilateral trades or in a trade served exclusively by controlled carriers are exempt from the rate regulation prescribed in Pub. L. 95-483. Likewise, rates which are established pursuant to an agreement among carriers, such as a conference agreement are exempt. However, rates set independently (such as open rates) are subject to the regulatory requirements of Pub. L. 95-483 when not related to cargo moving in the bilateral trades or a trade served exclusively by controlled carriers.

In order to identify controlled carriers that are not exempt from the provisions of the Act, the Commission periodically issues section 21 Orders to carriers who could meet the definition of a controlled carrier under the Act. The Orders require the carriers to answer questions concerning ownership, flag of their vessels, operating areas, United States trades served, and seek their opinion as to possible exemptions. Based upon its response to a section 21 Order issued to them, the Commission has classified Compagnie Maritime Zairoise (CMZ) as a controlled carrier, pursuant to the definition contained in the Act, that has not been totally exempted by section 18(c)(6) of the Shipping Act, 1916. On March 19, 1980, a letter was sent to Compagnie Maritime Zairoise (CMZ) advising them of the Commission's action. The letter further advised them that all rates, including open rates, in the bilateral trades between the U.S. and Zaire (e.g., those set forth in the American West African Freight Conference inbound and outbound Tariffs) are exempt. However, in the crosstrades between the United States and the other West African countries included in those tariffs, *open rates*, as well as all rates that might be filed in any independent tariff, are subject to section 18(c) of the Shipping Act. No response was received to this letter.

Therefore, pursuant to section 18(c) of the Shipping Act, 1916, the Federal Maritime Commission has classified Compagnie Maritime Zairoise (CMZ) as a controlled carrier and is amending the list of controlled carriers that have not been totally exempted by section 18(c)(6) of the Act, previously published in the Federal Register on January 23, 1980 to include this carrier.

The amended list is shown below: Baltic Shipping Co.—U.S.S.R.; Bangladesh Shipping Corp.—Bangladesh; Black Sea Shipping Company—U.S.S.R.; Black Star Line—Ghana; Compagnie Maritime Zairoise (CMZ)—Zaire; Compagnie Nationale Algerienne de Navigation—Algeria; Companhia de Navegacao Loide Brasilerio—Brazil; Compania Chilena De Navegacion Interoceanica, S.A.—Chile; Djakarta Lloyd, P.T.—Indonesia; Egyptian National Line—Egypt; Far Eastern Shipping Co. (FESCO)—U.S.S.R.; Flota Mercante Gran Centro Americana S.A. (Flomerca)—Guatemala; Nurmansk Shipping Co. Artic Line—U.S.S.R.; Neptune Orient Lines (NOL)—Singapore; Pakistan National Shipping Corporation—Pakistan; Peruvian State Line—Peru; Polish Ocean Lines—Poland; Shipping Corporation of India—India; South African Marine Corp. Ltd.—South Africa; Transportes Navieros Ecuatorianos (Transnave)—Ecuador.

The process of identification and classification of controlled carriers is continuous. The list as shown will be amended as such carriers enter and leave the United States trades.

By the Commission June 20, 1980.

Francis C. Hurney,
Secretary.

[FR Doc. 80-19471 Filed 6-27-80; 8:45 am]
BILLING CODE 6730-01-M

FEDERAL RESERVE SYSTEM

Florida Bancorporation, Inc.; Formation of Bank Holding Co.

Florida Bancorporation, Inc., Clearwater, Florida, has applied for the Board's approval under section 3(a)(1) of the Bank Holding Company Act (12 U.S.C. 1842(a)(1)) to become a bank holding company by acquiring 97 percent or more of the voting shares of Florida Bank of Commerce, Clearwater, Florida. The factors that are considered in acting on the application are set forth in section 3(c) of the Act (12 U.S.C. 1842(c)).

The application may be inspected at the offices of the Board of Governors or at the Federal Reserve Bank of Atlanta. Any person wishing to comment on the application should submit views in writing to the Reserve Bank, to be received not later than July 23, 1980. Any comment on an application that requests a hearing must include a statement of why a written presentation would not suffice in lieu of a hearing, identifying specifically any questions of fact that are in dispute and summarizing the evidence that would be presented at a hearing.

Board of Governors of the Federal Reserve System, June 23, 1980.

Cathy L. Petryshyn,
Assistant Secretary of the Board.

[FR Doc. 80-19504 Filed 6-27-80; 8:45 am]
BILLING CODE 6210-01-M

ABN Bank International USA Inc.; Corporation To Do Business Under Section 25(a) of the Federal Reserve Act Establishment of U.S. Branch of a Corporation To Be Organized Under Section 25(a)

An application has been submitted for the Board's approval of the organization of a corporation to do business under section 25(a) of the Federal Reserve Act ("Edge Corporation"), to be known as ABN Bank International USA Inc., Chicago, Illinois. ABN Bank International USA Inc., would operate as a subsidiary of Algemene Bank Nederland nv, Amsterdam, Netherlands. The proposed corporation has also applied for the Board's approval under § 211.4(c)(1) of Regulation K (12 CFR 211.4(c)(1)) to establish branches in Miami, Florida, and Houston, Texas. The factors that are considered in acting on these applications are set forth in § 211.4(a) of the Board's Regulation K (12 CFR 211.4(a)).

The applications may be inspected at the offices of the Board of Governors or at the Federal Reserve Bank of Chicago. Any person wishing to comment on the applications should submit views in writing to the Secretary, Board of Governors of the Federal Reserve System, Washington, D.C. 20551 to be received no later than July 23, 1980. Any comment on an application that requests a hearing must include a statement of why a written presentation would not suffice in lieu of a hearing, identify specifically any questions of fact that are in dispute and summarize the evidence that would be presented at a hearing.

Board of Governors of the Federal Reserve System, June 24, 1980.

Griffith L. Garwood,

Deputy Secretary of the Board.

[FR Doc. 80-19520 Filed 6-27-80; 8:45 am]

BILLING CODE 6210-01-M

Bennett Bancshares, Inc.; Formation of Bank Holding Company

Bennett Bancshares, Inc., Bennett, Iowa, has applied for the Board's approval under § 3(a)(1) of the Bank Holding Company Act (12 U.S.C. § 1842(a)(1)) to become a bank holding company by acquiring 80 percent or more of the voting shares of Bennett State Bank, Bennett, Iowa. The factors that are considered in acting on the application are set forth in § 3(c) of the Act (12 U.S.C. § 1842(c)).

The application may be inspected at the offices of the Board of Governors or at the Federal Reserve Bank of Chicago. Any person wishing to comment on the application should submit views in writing to the Reserve Bank, to be received not later than July 24, 1980. Any comment on an application that requests a hearing must include a statement of why a written presentation would not suffice in lieu of a hearing, identifying specifically any questions of fact that are in dispute and summarizing the evidence that would be presented at a hearing.

Board of Governors of the Federal Reserve System, June 24, 1980.

Griffith L. Garwood,

Deputy Secretary of the Board.

[FR Doc. 80-19519 Filed 6-27-80; 8:45 am]

BILLING CODE 6210-01-M

First Pennsylvania Corp., Proposed Insurance and Reinsurance Activities

First Pennsylvania Corporation, Philadelphia, Pennsylvania has applied, pursuant to section 4(c)(8) of the Bank Holding Company Act (12 U.S.C. § 1843(c)(8)) and § 225.4(b)(2) of the Board's Regulation Y (12 CFR 225.4(b)(2)), for permission to engage in reinsurance activities through its *de novo* subsidiary, Pennco Life Insurance Company, Phoenix, Arizona.

Applicant states that the proposed subsidiary would engage in the activities of underwriting, as reinsurer, credit life and credit accident and health insurance directly related to extensions of credit by Applicant's subsidiary bank, First Pennsylvania Bank, N.A. In addition, Applicant proposes to transfer from Applicant's affiliate, Eastern Life Insurance Company, to the proposed subsidiary the existing credit life and credit accident and health insurance related to extensions of credit by First Pennsylvania, N.A. These activities would be performed from offices of Applicant's subsidiary in Phoenix, Arizona, and the geographic areas to be served are southeastern Pennsylvania, Delaware, Maryland, New Jersey and the Virgin Islands. Such activities have been specified by the Board in Section 225.4(a) of Regulation Y as permissible for bank holding companies, subject to Board approval of individual proposals in accordance with the procedures of section 225.4(b).

Interested persons may express their views on the question whether consummation of the proposal can "reasonably be expected to produce benefits to the public, such as greater convenience, increased competition, or gains in efficiency, that outweigh possible adverse effects, such as undue concentration of resources, decreased or unfair competition, conflicts of interests, or unsound banking practices." Any request for a hearing on this question must be accompanied by a statement of the reasons a written presentation would not suffice in lieu of a hearing, identifying specifically any questions of fact that are in dispute, summarizing the evidence that would be presented at a hearing, and indicating how the party commenting would be aggrieved by approval of the proposal.

The application may be inspected at the offices of the Board of Governors or at the Federal Reserve Bank of Philadelphia.

Any views or requests for hearing should be submitted in writing and received by the Secretary, Board of Governors of the Federal Reserve System, Washington, D.C. 20551, not later than July 24, 1980.

Board of Governors of the Federal Reserve System, June 24, 1980.

Griffith L. Garwood,

Deputy Secretary of the Board.

[FR Doc. 80-19521 Filed 6-27-80; 8:45 am]

BILLING CODE 6210-01-M

GENERAL ACCOUNTING OFFICE

Regulatory Reports Review; Receipt of Report Proposal

The following request for clearance of a report intended for use in collecting information from the public was received by the Regulatory Reports Review Staff, GAO, on June 24, 1980. See 44 U.S.C. 3512 (c) and (d). The purpose of publishing this notice in the Federal Register is to inform the public of such receipt.

The notice includes the title of the request received; the name of the agency sponsoring the proposed collection of information; the agency form number, if applicable; and the frequency with which the information is proposed to be collected.

Written comments on the proposed CAB request are invited from all interested persons, organizations, public interest groups, and affected businesses. Because of the limited amount of time GAO has to review the proposed request, comments (in triplicate) must be received on or before July 18, 1980, and should be addressed to Mr. John M. Lovelady, Senior Group Director, Regulatory Reports Review, United States General Accounting Office, Room 5106, 441 G Street, NW, Washington, DC 20548.

Further information may be obtained from Patsy J. Stuart of the Regulatory Reports Review Staff, 202-275-3532.

Civil Aeronautics Board

The CAB requests clearance of the filing requirements contained in the newly enacted Part 204 of the Board's Economic Regulations—Data to Support Fitness Determinations. Part 204 sets forth the fitness data that must be submitted under the Airline Deregulation Act of 1978. Data is required to be filed by certificated carriers proposing a change in operations that is not substantial under section 204.3; by certificated carriers proposing a substantial change in operations under § 204.4; by applicants for certificate authority under § 204.5; by carriers providing, or proposing to provide essential air transportation under § 204.6; and by commuter carriers serving an eligible point under § 204.7. The CAB estimates respondents will number approximately 512 and that the filing burden will average 30 hours for § 204.4; 100 hours for § 204.5; 25 hours for § 204.6(a); 30 hours for § 204.6(b); 80 hours for § 204.6(c) and 20 hours for § 204.7. The CAB estimates that carriers will not need to file any information for § 204.3, as most of the information required may be obtained from CAB files, other agencies (FAA, DOT, SEC) and private contractors. The CAB also states that some carriers may not be required to file all or any data for each of the other sections if CAB can obtain such data from its own files, other agencies or private contractors. Carriers will be required to file initially and thereafter only when there is a change-in status. The CAB advises in its Final Rule that will become effective August 24, 1980, that carriers should check with the Bureau of Domestic Aviation, prior to submitting data to ascertain what information is already on file.

Norman F. Heyl,

Regulatory Reports Review Officer.

[FR Doc. 80-19513 Filed 6-27-80; 8:45 am]

BILLING CODE 1610-01-M

DEPARTMENT OF HEALTH AND HUMAN SERVICES

Social Security Administration

Conformity of Public Assistance Plan of the State of Connecticut with the Social Security Act; Hearing

Notice of hearing is hereby given as set forth in the following letter that has been sent to the Connecticut Attorney General's Office:

Department of Health and Human Services, *Social Seurity Administration, Baltimore, Maryland 21235.*

Office of the Deputy Commissioner.

Mr. Edward C. Walsh,

Assistant Attorney General, 90 Brainard Road, Hartford, Connecticut 06114.

Dear Mr. Walsh: This letter is in response to your request for a formal hearing in reconsideration of the disapproval of Connecticut State Plan Transmittal 77-11. This plan submittal dealt with the transfer of property for less than fair market value by persons applying for assistance under Title IV-A of the Social Security Act. The plan submittal was disapproved on October 11, 1979 by Robert C. Green, Regional Commissioner after consultation with Barry Van Lare, Associate Commissioner for Family Assistance. The submittal was found to be contrary to Federal policy and to the decision in *Maher* v. *Buckner* 424 F. Supp. 366 (D. Conn. 1976), aff'd mem., 434 U.S. 898 (1977).

The reconsideration will be held pursuant to Section 1116(a) and (b) of the Social Security Act. The hearing will be conducted in accordance with the practice and procedures set forth in 45 CFR Part 213.

I have set 10:00 a.m. on July 17, 1980, at the Department of Health and Human Services, Hubert H. Humphrey Building, Rooms 423-A and 425-A, 200 Independence Avenue, S.W. Washington, D.C. 20201 as the time and place of the hearing.

We anticipate that the issue involved in the hearing will be: Whether the State's proposed AFDC plan amendment concerning the disposition of assets is in violation of Section 402(a)(5) of the Social Security Act, Section 402(a)(7) of the Social Security Act, 45 CFR 233.20(a)(3)(ii)(E), and other relevant provisions of the Act and regulations.

Please let me know if the time set for the hearing is agreeable to you. If your agency would like to have a prehearing conference to define the issue further, to explore the possibility of stipulation, or for any other purpose that will contribute to an expeditious resolution of the issue, please advise.

Sincerely yours,

Herbert R. Doggette, Jr.

Deputy Commissioner of Social Security.

Interested persons or groups may request to participate in the hearing either as a party or as amicus curiae. Any individual or group may request to participate as a party if the issue to be considered at the hearing has caused them injury and their interests were intended to be protected by the governing Federal Statute. Any individual or group requesting to participate in the hearing as a party shall file a petition with the Social Security Administration Hearing Clerk, Room 416, Transpoint Bldg., Department of Health and Human Services, 2100 2nd Street, S.W., Washington, D.C. 20024, on or before July 15, 1980. The petition shall concisely state (a) petitioner's interest in the hearing, (b) who will represent the petitioner, (c) the issue on which petitioner intends to participate, and (d) whether petitioner intends to present witnesses.

Any individual or group requesting to participate as amicus curiae shall file a petition with the Social Security Administration Hearing Clerk at the above address at any time before commencement of the hearing, stating concisely (a) the petitioner's interest in the hearing, (b) who will represent the petitioner, and (c) the issue on which petitioner intends to present argument.

Dated: June 17, 1980.

Herbert R. Doggette, Jr.,

Deputy Commissioner of Social Security.

[FR Doc. 80-19498 Filed 6-27-80; 8:45 am]

BILLING CODE 4110-07-M

DEPARTMENT OF THE INTERIOR

Bureau of Indian Affairs

Receipt of Petition for Federal Acknowledgment of Existence as an Indian Tribe

June 18, 1980.

This notice is published in the exercise of authority delegated by the Secretary of the Interior to the Assistant Secretary—Indian Affairs by 209 DM 8.

Pursuant to 25 CFR 54.8(a) notice is hereby given that the

San Juan Southern Paiute c/o Mrs. Evelyn James, P.O. Box 2656, Tuba City, Arizona 86045

has filed a petition for acknowledgment by the Secretary of the Interior that the group exists as an Indian tribe. The petition was received by the Bureau of Indian Affairs on May 6. The petition was forwarded and signed by Mrs. Evelyn James.

This is a notice of receipt of petition and does not constitute notice that the petition is under active consideration. Notice of active consideration will be by mail to the petitioner and other interested parties at the appropriate time.

Under Section 54.8(d) of the Federal regulations, interested parties may submit factual or legal arguments in support of or in opposition to the group's petition. Any information submitted will be made available on the same basis as other information in the Bureau of Indian Affairs files.

The petition may be examined by appointment in the Division of Tribal Government Services, Bureau of Indian Affairs, Department of the Interior, 18th and C Streets, N.W., Washington, D.C. 20242.

Ralph R. Reeser,

Acting Deputy Assistant Secretary—Indian Affairs.

[FR Doc. 80-19475 Filed 6-27-80; 8:45 am]

BILLING CODE 4310-02-M

Bureau of Land Management

California State Office; Notice of Availability

INFORMATION DOCUMENT: Wilderness and Areas of Critical Environmental Concern (ACECs) in the California Desert Conservation Area (CDCA), May 21, 1980.

This document has been prepared in response to public requests for more information on how Wilderness Study Areas and Areas of Critical Environmental Concern were analyzed in the early part of the CDCA planning process.

More than 14,000 individuals, groups, agencies and organizations currently on the CDCA Plan mailing list have received copies of this document.

Those persons interested in this document may obtain copies by calling (714) 787-1367 or sending their request to BLM, P.O. Box 5555, Riverside, California 95217.

Dated: June 20, 1980.

James B. Ruch,

State Director.

[FR Doc. 80-19474 Filed 6-27-80; 8:45 am]

BILING CODE 4310-84-M

Wilderness Decision—Idaho

The August 10, 1979, decision to drop three wilderness units (in the St. Anthony Sand Dune area in the Idaho Falls BLM District) due to a lack of wilderness values was appealed to the Interior Board of Land Appeals (IBLA). On January 11, 1980, the IBLA remanded the case to Idaho BLM for further consideration.

The Idaho State Director re-issued this decision on February 8, 1980, calling for an intensive inventory to be conducted to determine the presence of wilderness values.

During the protest period, 35 letters were received on these inventory units. Comments in the protest letters addressed wilderness opinion, resource management and use conflicts, and wilderness characteristics. Only those comments related to wilderness characteristics can be used during the inventory process. After analysis of comments the decision remains that the three units are not clearly and obviously lacking in wilderness values and intensive inventory must be conducted:

		Acres
35-3	Sand Mountain	27,670
35-4	Black Knoll	7,095
35-5	Big Sandy	10,735
	Total	45,500

This final decision, upon publication in the Federal Register, is subject to appeal under Title 43, Code of Federal Regulations (CFR), Part 4. If no appeals are recieved the decision will remain in effect and the intensive inventory results will be announced in August 1980. If an appeal is filed, no further action would be taken by the BLM until the IBLA acted on the appeal.

The 45,500 acres will remain under the BLM Wilderness Interim Management Policy.

FOR FURTHER INFORMATION CONTACT THE FOLLOWING:

State Director, Idaho State Office, Box 042, Federal Bldg., 550 W. Fort Street, Boise, Idaho 83724.

District Manager, Idaho Falls District Office, 940 Lincoln Road, Idaho Falls, Idaho 83401.

Dated: June 23, 1980.

Robert O. Buffington,

State Director.

[FR Doc. 80-19534 Filed 6-27-80; 8:45 am]

BILLING CODE 4310-84-M

Eastern Powder River Basin Management Framework Plan Amendment

June 30, 1980.

The Casper, Wyoming District Office of The Bureau of Land Management has reviewed and made a final decision regarding the amendment of portions of the Eastern Powder River Basin Management Framework Plan (MFP). The reason for the review and amendment was to make certain the MFP reflects, as completely as possible, current statutory requirements and policies, and to continue carrying out the requirements of Section 522 of the Surface Mining Control and Reclamation Act of 1977.

Background standards and procedures for this MFP review and amendment preparation are contained in the Federal Register, Vol. 44, No. 140,42584-42652 of July 19, 1979; and Vol. 44, No. 153,46386-46401 of August 7, 1979. The standards for this review are also discussed in a final environmental statement describing the Secretary of the Interior's preferred coal program and alternatives, released in April 1979.

The review area is part of the Powder River Coal Region. Located in Campbell County, Wyoming, the area lies in a 4-to-10-mile-wide band along State Highway 59 and U.S. Highway 14/16, beginning about 15 miles south of Gillette and extending about 30 miles north of Gillette. This area contains parts of the Wyodak coal seam which have high and moderate development potential, as designated by the United States Geological Survey.

Public participation opportunities were provided in the following ways: (1) Public notice of the review was issued in December 1979; (2) a public meeting in Gillette, Wyoming was held on February 4 to explain the planning process; (3) a proposed decision brochure was issued on March 26, 1980, for a 90-day public review and comment; and (4) a public meeting and hearing was conducted in Gillette on June 18, 1980, to present the proposed decisions and receive oral comments. Public comments were considered in preparation of the final amendment.

The Gillette review area contains 219,400 acres and 15.6 billion tons of high and moderate development potential coal. Non-federal and committed federal coal lands, containing 64,900 acres and 4.6 billion tons of coal, were excluded from the planning process. Application of 2 planning constraints from the 1977 MFP eliminated another 40,600 acres and 2.7 billion tons. These constraints were: to restrict new leasing on a buffer area around the city of Gillette (29,800 acres and 2.1 billion tons of coal); and, to postpone leasing in producing oil and gas areas until the economic recovery of oil and gas is complete (10,800 acres and .6 billion tons of coal).

The 1977 MFP also contained a planning constraint that restricted new leasing near the cities of Gillette and Douglas, Wyoming. At that time it appeared these communities needed additional time to accommodate added socioeconomic effects of coal development. Based on new information and an analysis that constraint has been lifted.

Coal unsuitability criteria were applied to the remaining 113,900 acres of high and moderate potential coal lands containing about 8.3 billion tons of coal. Approximately 111,500 acres and 8.1 billion tons were found acceptable, or acceptable pending study, for further consideration for new coal leasing and lease exchange, and 2,400 acres and .2 billion tons were found to be unacceptable.

A 30-day protest period begins from the date of this notice. During that time, any person who participated in the planning process and has an interest which may be adversely affected by the decision may protest the approval of the amendment. Once approved, activity planning will begin which includes the identification of tracts for lease, their ranking by economic and environmental factors, and preparation of a regional environmental impact statement for lease sales.

For further information contact Glenn Bessinger at the Bureau of Land Management, Casper District Office, 951 Rancho Road, Casper, Wyoming 82601, phone (307) 265-5550, ext. 5101. Documents relevant to the planning process are also available at the above address.

Robert E. Wilber,

District Manager.

[FR Doc. 80-19597 Filed 6-27-80; 8:45 am]

BILLING CODE 4310-84-M

INTERSTATE COMMERCE COMMISSION

Long-and-Short-Haul Application for Relief; Formerly Fourth Section Application

June 25, 1980.

This application for long-and-short-haul relief has been filed with the I.C.C.

Protests are due at the I.C.C. on or before July 15, 1980.

No. 43835, Hapag-Lloyd A.Gc., No. 2, on general commodities in marine type containers or trailers from ports on the U.S. Gulf Coast to ports in the United Kingdom and Ireland via Charleston, SC., as publiched in its tariff ICC HLCU 714, effective July 15, 1980. Grounds for relief-water competition.

By the Commission.

Agatha L. Mergenovich,

Secretary.

[FR Doc. 80-19511 Filed 6-27-80; 8:45 am]

BILLING CODE 7035-01-M

[Finance Docket No. 29382F]

Tenmet, Inc. and Nashville & Ashland City Railroad Co.—Acquisition and Operation—Over Illinois Central Gulf Railroad Co. in Davidson and Cheatham Counties, Tenn.

TenMet, Inc. and Nashville & Ashland City Railroad Company (Applicants) P.O. Box 345, Franklin, IN 46131, represented by Mr. Robert M. Branigin, Vice President, TenMet, Inc., 103 East Monroe Street, P.O. Box 345, Franklin, IN 46131, hereby gives notice that on the 12th day of June, 1980, they filed with the Interstate Commerce Commission at Washington, DC, an application pursuant to 49 U.S.C. 10901 for a decision approving and authorizing the acquisition and operation over the Illinois Central Gulf Railroad Company (ICG) between Ashland City, TN, and Nashville, TN.

The Applicant, TenMet, Inc., through its wholly owned subsidiary, Nashville & Ashland City Railroad Company proposes to acquire and operate only within the counties of Davidson and Cheatham, TN, between the cities of Nashville, TN (MP 205.76) and Ashland City, TN (MP 185), over existing rail properties of the ICG. The existing line passes through the incorporated cities, towns and/or villages of Nashville, Scottsboro and Ashland City, TN. The total number of miles of main track to be acquired and operated is 20.76 miles, together with the rail properties known and designated as the North Nashville Lead from Twenty-sixth Avenue to First Avenue in Nashville, TN.

The present and future public convenience and necessity require and will continue to require the proposed acquisition and operation because ICG seeks to abandon the subject line of rail properties pursuant to Notice filed and docketed AB-43 (Sub-No. 70F), with the consequent loss of all rail service of any kind to the affected cities (excepting Nashville, TN), towns and villages, each of which are the situs of commercial and industrial entities reliant upon both in-bound and out-bound rail shipments for their continued existence and growth and for additional industrial and commercial development in the affected area.

In accordance with the Commission's regulations (49 CFR 1108.8) in Ex Parte No. 55 (Sub-No. 4), *Implementation—National Environmental Policy Act, 1969*, 352 I.C.C. 451, 1976, any protests may include a statement indicating the presence or absence of any effect of the requested Commission action on the quality of the human environment. If any such effect is alleged to be present, the statement shall indicate with specific data the exact nature and degree of the anticipated impact. See *Implementation-National Environmental Policy Act, 1969, supra*, at p. 487.

Pursuant to the provisions of the Interstate Commerce Act, as amended, the proceeding will be handled without public hearings unless comments in support or opposition on such application are filed with the Secretary, Interstate Commerce Commission, 12th and Constitution Avenue, N.W., Washington, DC 20423, and the aforementioned counsel for applicant, within 30 days after date of first publication in a newspaper of general circulation. Any interested person is entitled to recommend to the Commission that it approve, disapprove, or take any other specified action with respect to such application.

Agatha L. Mergenovich,

Secretary.

[FR Doc. 80-19512 Filed 6-27-80; 8:45 am]

BILING CODE 7035-01-M

Commission Issuance

AGENCY: Interstate Commerce Commission.

ACTION: Notice of Amendments to internal Commission Issuance.

SUMMARY: The following are amendments to the Commission Issuance of December 19, 1978. The purpose of these amendments is to reflect the merging of the Bureau of Operations and the Bureau of Investigations and Enforcement into the Office of Consumer Protection. All of the amendments implement a name change and several involve a change in responsibility. A new Section, which was formerly a Chairman's Issuance, has also been added.

Section 41, Employee Boards Under Section 10304, has been updated to reflect the membership of employee boards and the addition of the Revocation Board and the Regional Motor Carrier Boards, which were formerly part of the Bureau of Operations. *Section 51 Criminal Prosecutions and Civil Forfeitures and Injunction Proceedings* has been amended to reflect modifications relating to the relationship between the Director of the Office of Consumer Protection (formerly the Bureau of Investigations and Enforcement) and the staff of the Office. We have also added a new *Section 73, Authorization to Commission Employees to Divulge Information*, which was originally part of the Commission's "Internal Minutes" and was subsequently issued as Chairman's Issuance No. 79-4 on January 4, 1979.

The material here supercedes the previous material relating to the Bureau of Operations and the Bureau of Investigations and Enforcement in the Commission Issuances. A notice of these revisions will appear in the Federal Register. Because the provisions of this document govern the internal operations and procedures of the Commission, it is being issued in final form, and public comments are not being requested.

EFFECTIVE DATE: May 18, 1980.

FOR FURTHER INFORMATION CONTACT: Kathleen King (202) 275-0956.

Processing and Printing Decisions

24. Clearance Procedures.

Paragraph (d) *Responsibilities* is amended to read as follows:

(1) *Originating Office.*—Sections of the Office of Proceedings, Boards, Bureau of Accounts, Offices of Consumer Protection, Hearings, Policy and Analysis, General Counsel, and others will continue to prepare and circulate matters to the divisions of the

Commission in accordance with the above criteria and pertinent issuances. All matters circulated for vote by a division will contain information as to any specific issues that must be approved, e.g., market dominance, suspension, or fitness; any controlling time limits, including the date by which a matter must be cleared in order to be served by the deadline (in setting deadlines, one day shall be allowed for clearance if at all possible); and any other information pertinent to final disposition of the matter under review. More specifically, originating offices shall develop completed packages for circulation to divisions which generally include the following numbered items. Exceptions may be made in circulations to the entire Commission or where the division is already familiar with the subject matter.

Boards

41. Employee Boards under Section 10304.

Paragraph (d) *Current listing of employee board members* is amended to read as follows:

Office of Consumer Protection

Motor Carrier Leasing Board: Director, Associate Director, Deputy Director, Section of Consumer Assistance.

Insurance Board: Director, Associate Director, Deputy Director, Section of Consumer Assistance.

Railroad Service Board: Director, Associate Director, Deputy Director, Section of Consumer Assistance.

Revocation Board: Director, Associate Director, Deputy Director, Section of Consumer Assistance.

Regional Motor Carrier Boards (Regions 1–6): Regional Director, Regional Operations Director, Assistant Regional Operations Director.

Special Authorizations

51. *Criminal Prosecutions and Civil Forefeiture and Injunction Proceedings.*

Paragraph (a) *Institution of proceedings* is amended to read as follows:

The Director of the Office of Consumer Protection is authorized to approve staff recommendations to the Department of Justice or to the United States Attorneys institution of criminal proceedings, civil forfeiture penalty suits or civil injunction proceedings for violations of the Interstate Commerce Act, related Acts, or supplementary Acts administered by the Commission, or any other Federal, civil, and criminal statutes. The Office further is authorized to institute civil injunction proceedings which the Commission is empowered to institute in its own name under the provisions of the Interstate Commerce Act: The Commission reserves to itself the determination of what further action, if any, should be taken in the event a Federal Court of Appeals renders the decision adverse to the Commission's position in the criminal or civil proceeding that was instituted by the Office of Consumer Protection.

Paragraph (b) *Settlement of proceedings* is amended to read as follows:

The Director of the Office of Consumer Protection as the Commission's designee is authorized, within the framework of the Federal Claims Collection Act of 1966, the applicable standards promulgated by the Attorney-General and the Comptroller General and pursuant to Commission procedures to negotiate and approve staff recommendations to compromise, suspend, or terminate enforcement claims arising under the civil penalty or forfeiture provisions of the Interstate Commerce Act, Elkins Act, and amendatory and supplemental legislation related to such Acts.

Paragraph (c)(1) and (c)(2) *Intervention in private party actions* are amended to read as follows:

(1) The Director of the Office of Consumer Protection is authorized to approve staff recommendations to intervene on behalf of the Commission in any civil action instituted by private persons under the provisions of Section 11708 of the Interstate Commerce Act and to notify the court in which such an action is brought that the Commission has instituted or has pending before it a recommendation to institute an administrative proceeding which will embrace the same subject matter as is involved in the court action.

(2) Applications or complaints, with all supporting papers, filed under Section 11708 of the Act, served upon or received by any member of the Commission's staff, either in the Washington headquarters or in the field, shall be forwarded immediately to the Director, Office of Consumer Protection.

Paragraph (d) *Representation in the Supreme Court* is amended to read as follows:

The Office of the General Counsel will represent the Commission in the Supreme Court in cases brought by the Office of Consumer Protection in the lower courts.

Paragraph (e) *Delegation* is amended to read as follows:

Any power delegated to the Director of the Office of Consumer Protection under this issuance may be sub-delegated to the Associate Director, Deputy Director of the Section of Enforcement, Regional Directors and Regional Counsels.

Instructions for Employees

61. *Appearances of Employees as Expert Witnesses.*

Paragraph (c) *Internal Procedures* is amended to read as follows:

Any employee receiving a subpoena shall immediately notify, through the employee's supervisor, the director of the employee's bureau or office. The director shall notify the General Counsel or Director of the Office of Consumer Protection, as appropriate under (d) below. The General Counsel and the Director of the Office of Consumer Protection shall keep each other informed of subpoena matters and coordinate their handling of them.

Paragraph (d)(1) and (d)(2) *The handling of subpoenas* are amended to read as follows:

(1) With respect to court cases, if a subpoena is issued in an enforcement action, including one initiated by a private party, or in any other litigation, if the subpoena seeks evidence resulting from an investigation conducted by the employee, it will be handled by the Office of Consumer Protection in consultation with other appropriate bureau or office directors. In all other instances involving court cases, subpoenas will be handled by the General Counsel, in consultation with the appropriate bureau or office head, unless the General Counsel shall determine that for cost or other considerations the matter should more appropriately be handled by the Office of Consumer Protection, in which case he may refer the matter to that Office for disposition.

(2) With respect to Commission proceedings, whenever an employee is subpoenaed to testify on behalf of a party, the subpoena will be handled by the Office of Consumer Protection unless that office is a party, in which case the matter will be handled by the General Counsel.

73. *Authorization to Commission Employees to divulge Information.*

Paragraph (a) *To Federal Law Enforcment Agencies* is amended to read as follows:

The Director of the Office of Consumer Protection or his or her designee, is authorized to make available to other Federal agencies engaged in law enforcement activities, including the Federal Bureau of Investigation and the Internal Revenue Service, any Commission investigatory file or files or other information obtained by examination of the records or properties of carriers or other persons under the authority of the Interstate commerce Act. Upon the release of any data to another Federal agency, a

memorandum of the transmittal will be placed in the carrier's file for record purposes.

Paragraph (b) *To State, County, and Local Agencies* is amended to read as follows:

The Director of the Office of Consumer Protection and the Director of the Bureau of Accounts, or their designees, are authorized to make available to State, County, and local enforcement and regulatory agencies any Commission investigatory file or files or other information obtained by examination of the records or properties of carriers or other persons under the authority of the Interstate commerce Act. Upon the release of data to any State law enforcement or regulatory agency, a memorandum of the transmittal shall be placed in the carrier's file for record purposes.

Paragraph (c) *To the Department of Transportation* is amended to read as follows:

Any employee of the Commission who, in the course of his or her work, discovers an apparent violation of the safety regulations of the Department of Transportation, shall immediately transmit this information to his or her supervisor who will, in turn, inform the bureau or office director. It will be the responsibility of the latter to bring the information to the attention of the Department of Transportation for handling.

Paragraph (d) *To Members of the ICC–CAB—FMC Liaison Group on Audits and Cost Finding* is amended to read as follows:

The Directors of the Bureau of Accounts and the Office of Consumer Protection are authorized to divulge to proper representatives of the Civil Aeronautics Board and the Federal Maritime Commission facts and information obtained in a field examination of accounts or other records of carriers under the joint jurisdiction of the Commission and one of the other agencies, and to exchange such other information with those agencies as may be mutually useful and avoid duplication of effort.

Paragraph (e) *To the Federal Maritime Commission* is amended to read as follows:

Any employee of the Commission who, in the course of his or her work, discovers an apparent violation of laws or regulations administered by the Federal Maritime Commission shall refer that information to his or her supervisor who shall in turn, inform the office or bureau director. It will be the responsibility of the latter to refer the matter to the Federal Maritime Commission for handling.

Paragraph (f) *Information Warranting Income Tax Consideration* is amended to read as follows:

The Director of the Bureau of Accounts Office and the Director of the Office of Consumer Protection are authorized to advise the Internal Revenue Service of information coming to the attention of the Commission's staff that may warrant income tax consideration, to permit revenue of relevant files by members of the staff of the Internal Revenue Service, to permit them to copy any material in the Commission's files that is pertinent to income tax matters, and to interview employees of the Commission having knowledge of possible tax evasions.

Paragraph (g) *Violations by Carriers Domiciled in Canada* is amended to read as follows:

Any employee of the Commission who, in the course of his or her work, discovers an apparent violation of the laws or regulations administered by the Commission by a carrier domiciled in the Dominion of Canada shall immediately refer such information to his or her supervisor who in turn, shall inform the appropriate bureau or office director or Regional Director. It shall be the responsibility of the latter to transmit this information to the appropriate Canadian officials.

Paragraph (h) *Complaints of Racial Discrimination by Carriers*

The Director of the Office of Consumer Protection is authorized to forward copies of every informal complaint alleging racial discrimination by a carrier under the Commission's jurisdiction which is received by the Commission to the Civil Rights Division of the Department of Justice and to transmit directly to the Civil Rights Division any reports of Commission staff investigators or other employees which involve alleged instances of racial discrimination by carriers.

Agatha L. Mergenovich,

Secretary.

[FR Doc. 80-19542 Filed 6-29-80; 8:45 am]

BILLING CODE 7035-01-M

Motor Carrier Temporary Authority Application; Important Notice

The following are notices of filing of applications for temporary authority under Section 10928 of the Interstate Commerce Act and in accordance with the provisions of 49 CFR 1131.3. These rules provide that an original and two (2) copies of protests to an application may be filed with the Regional Office named in the Federal Register publication no later than the 15th calendar day after the date the notice of the filing of the application is published in the Federal Register. One copy of the protest must be served on the applicant, or its authorized representative, if any, and the protestant must certify that such service has been made. The protest must identify the operating authority upon which it is predicated, specifying the "MC" docket and "Sub" number and quoting the particular portion of authority upon which it relies. Also the protestant shall specify the service it can and will provide and the amount and type of equipment it will make available for use in connection with the service contemplated by the TA application. The weight accorded a protest shall be governed by the completeness and pertinence of the protestant's information.

Except as otherwise specifically noted, each applicant states that there will be no significant effect on the quality of the human environment resulting from approval of its application.

A copy of the application is on file, and can be examined at the ICC Regional Office to which protests are to be transmitted.

Note.—All applications seek authority to operate as a common carrier over irregular routes except as otherwise noted.

Motor Carriers of Property

Notice No. F-37

THE FOLLOWING APPLICATIONS WERE FILED IN REGION I.

SEND PROTESTS TO REGIONAL AUTHORITY CENTER, INTERSTATE COMMERCE COMMISSSION, 150 CAUSEWAY ST.—RM. 501, BOSTON, MA 02114.

MC 2860, (Sub-1-8), filed June 18, 1980. Applicant: NATIONAL FREIGHT, INC., 71 West Park Avenue, Vineland, NJ 08360. Representatives: Peter J. Nickles, Covington & Burling, 888 16th Street, N.W., Washington, D.C. 20006. Jack Gruenstein, National Freight, Inc., 71 West Park Avenue, Vineland, NJ 08360.

All correspondence should be directed to the attention of Jack Gruenstein at the above address.

General commodities between all points in the states of AL, AR, GA, IL, IN, KY, LA, MA, ME, MI, MN, MS, NH, OH, OK, PA, TN, TX, VT, WI and WV.

MC 149167 (Sub-1-1TA), filed June 16, 1980. Applicant: MAVERICK RENTING & LEASING, INC., 105 Howell Street, Jersey City, NJ 07306. Representative: Piken & Piken, Esqs., Queens Office Tower, 95-25 Queens Boulevard, Rego Park, NY 11374. *contract* irregular:

Bakery Products and such commodities as are used in the manufacture and distribution of bakery

products (except commodities in bulk), between the facilities of Entenmann's, Inc., North Lake, IL, and Pittsburgh, PA, Atlanta, GA and Bay Shore, NY. Supporting shipper: Entenmann's, Inc., 1724 Fifth Avenue, Bay Shore, NY 11706.

MC 99345 (Sub No. 1–1TA), filed June 17, 1980. Applicant: CRYSTAL MOTOR EXPRESS INC., 3 Melvin St., Wakefield, Ma. 01880. Representative: Andrew K. Powers Jr., 3 Melvin St., Wakefield, Ma. 01880. *General Commodities* (except in bulk by tank vehicles) between points in Massachusetts, Connecticut, Rhode Island, Vermont, New Hampshire, and Maine. Supporting shippers: Houghton Mifflin Co., Wayside Rd., Burlington, Ma 01803, Prime Polymers Inc., 638 Summer St., Lynn, Ma. 01905, Monsanto Company, 800 N. Lindbergh Blvd., St. Louis, Mo. 63166, Touraine Paints Inc., 1760 Revere Beach Pkwy., Everett, Ma. 02149, Addison Wesley Publ. Co., Inc., 1 Jacob Way, Reading, MA. 01867.

MC 144061 (Sub. 1–4TA), filed June 17, 1980. Applicant: SICOMAC CARRIERS, INC., 347 Sicomac Ave., Wyckoff, N.J. 07481. Representative: Jack L. Schiller, 345 Webster Avenue, Brooklyn, N.Y. 11230. (1) *Liquid Chemicals* and *Castor Oils*, in bulk, from the facilities of NL Chemicals-Division of NL Industries, Inc., located at or near Bayonne, N.J., to points in GA, IL, MA, MI, MN, NC, PA, SC, & TX. (2) *Raw materials* used in the production of liquid chemicals and castor oils, in bulk, from points in MN, NC, NY, PA, SC, TN, TX, and WV, to the facilities of NL Chemicals-Division of NL Industries, Inc., located at or near Bayonne, N.J. *Conditions:* (1) Restricted to service to be performed under a contract or continuing contracts with NL Chemicals-Division of NL Industries, Inc., of Bayonne, N.J. Supporting shipper: NL Chemicals-Division of NL Industries, Inc., 40 Avenue A, Bayonne, N.J. 07002. Send protests to: Interstate Commerce Commission, 150 Causeway Street, Boston, MA.

MC 143505 (Sub. No. 1–1TA), filed June 16, 1980. Applicant: KOMMER BULK FEED SERVICES, INC., 171 Stafford Road, Palmyra, New York 14522. Representative: Charles A. Schiano, Esq., 500 Wilder Building, One East Main Street, Rochester, New York 14614. Authority sought to operate as a *common carrier*, by motor vehicle, over irregular routes, transporting: Feed, Feed Ingredients and Feed Grade Phosphate between all points in New York, Pennsylvania, Ohio, Connecticut, Maryland, Virginia, New Jersey, Delaware, Massachusetts, New Hampshire, Maine and Vermont. Supporting shippers: Co-Op Feed Dealers, Inc., P.O. Box 670, Binghamton, New York; International Stock Foods, Corp., 533 Broad Street, Waverly, New York 14892, and Oxidental Chemical Company, Houston, Texas.

MC 140869 (Sub. 1–2TA), filed June 16, 1980. Applicant: KERRI TRUCKING, INC., 240 S. River St., Hackensack, N.J. 07601. Representative: David Olsen, 116 Williams Ave., Old Tappan, NJ. *Contract*, irregular: *Radio receivers in cabinets, components parts in items used in manufacturing the items above*, from Santa Claus, Indiana, to all points in the United States; except Hawaii and Alaska, on one hand, and on the other, Cincinnati, Ohio; Greenford, Ohio; Jersey City, N.J.; Rustin, Louisiana; Chicago, Ill.; Oxford, N.C.; L.A., California; Seattle, Washington; Beaverton, Oregon; to Santa Claus, Indiana. Supporting shipper: Saundesign Indiana Corp., Santa Claus, Indiana.

MC 143127 (Sub No. 1–13TA), filed June 16, 1980. Applicant: K. J. TRANSPORTATION, INC., 6070 Collett Rd., Victor, NY 14564. Representative: Linda A. Calvo (same address as applicant). *Medical supplies and equipment*, between Arvada, CO, Chicago, IL, Cleveland, OH, Lakewood, CO, Norcross, GA, S. Brunswick, NJ, and Tampa, FL. Supporting shipper: Cobe Laboratories, Inc., 1201 Oak St., Lakewood, CO 80215.

MC 144239 (Sub-1–2TA), filed June 16, 1980. Applicant: JLT CORPORATION, P.O. Box 107, Madison, NJ 07940. Representative: Joseph Sodano—President, P.O. Box 107, Madison, NJ 07940. Contract; Irregular. *Foodstuffs* (except in bulk, in tank vehicles), between Plover, WI on the one hand, and, on the other, points in CT, FL, NY, MA, PA, OH, MI, IN, IL, IA, TX, KY, TN, MO and AZ. Supporting shipper: Great American Basic Commodities, Inc., One Great American Way, Plover, WI.

MC 151047 (Sub-1–1TA), filed June 13, 1980. Applicant: DICK WELLER, INC., Shoham Road, P.O. Box 313, Warehouse Point, CT 06088. Representative: James M. Burns, 1383 Main Street, Suite 413, Springfield, MA 01103. *Contract carrier*, irregular routes; *builders hardware, drapery hardware, hand tools, steel strapping, band and strip steel and door operating equipment, and equipment, materials and supplies used in the manufacture, sale and distribution of such commodities*, between points in the contiguous 48 states (except ID, MA, MT, ND, NH, NM, SD, VT and WY), under a continuing contract or contract(s) with The Stanley Works, New Britain, CT. Supporting shipper: The Stanley Works, 480 Myrtle Street, New Britain, CT 06050.

MC 60186 (Sub-1–2), filed June 16, 1980. Applicant: NELSON FREIGHTWAYS, INC., 47 East Street, Rockville, CT 06066. Representative: Clifford J. O. Nelson, 47 East Street, Rockville, CT 06066. *General commodities (except those of unusual value, Classes A and B explosives and commodities in bulk in tank vehicles)*. Between Fall River, MA, on the one hand, and points in the United States, except Ak and HI, on the other. Restricted to traffic having a prior or subsequent movement by water. Supporting shipper: Atlantic Ships Management USA, Inc.

MC 59666 (Sub-1–2TA), filed June 16, 1980. Applicant: TRAFIK SERVICES, INC., 11 Newark Street, Providence, RI 02908. Representative: A. Joseph Mega, 11 Newark Stret, Providence, RI 02908. *Commodities classified as Hazardous Waste other than movements in bulk*. From all points of the Cecos International, Inc. at or near Niagara Falls, NY. Supporting shippers: American Hoechst Corporation, Coventry, RI, New England Container Company, Smithfield, RI, and Cooley, Inc., Pawtucket, RI.

MC 148127 (Sub-1–5TA), filed June 13, 1980. Applicant: LINEHAUL EXPRESS CORPORATION, P.O. Box 5078, Manchester, NH 03108. Representative: Neal R. Michaud, P.O. Box 5078, Manchester, NH 03108. *Lime juice, grenadine, cocktail mixes (non-alcoholic), jams and jellies* in glass bottles packed in cardboard cartons, between Warwick, RI, on the one hand, and, on the other, points in WI, MN, TX, OK, NE, IA, MO, IL, IN, MI, OH, KY and KS. Supporting shipper: Jefferson Bottling Co., Inc. of Warwick, RI 02888.

MC 141579 (Sub-1–1TA), filed June 13, 1980. Applicant: SECURITY DELIVERY SERVICE, INC., 33 Rector Street, New York, NY 10006. Representative: Larsh B. Mewhinney, Moore, Berson, Lifflander & Mewhinney, 555 Madison Avenue, New York, NY 10022. Contract, irregular, *Office memoranda, business records, computer printouts, computer data storage devices* and *printed matter* under contract with Standard & Poor's Corporation, between New York, NY and East Windsor Township, NJ. Supporting shipper: Standard & Poor's Corporation of New York, NY.

MC 147479 (Sub-1–3TA), filed June 13, 1980. Applicant: HARRISON CARRIERS, INC., P.O. Box 367, Harrison, NY 10528. Representative: David M. Marshall, Marshall and Marshall, 101 State Street, Suite 304, Springfield, MA 01103 *Alcoholic and non-alcoholic beverages*, from Hammondsport and Westfield, NY to

the facilities of State Distributing Corporation at Raleigh, NC. Supporting shipper: State Distributing Corp. of Raleigh, NC.

MC 147573 (Sub-1-1TA), filed June 13, 1980. Applicant: OAK ISLAND EXPRESS, INC., 2 Sixth Street, Jersey City, NJ 07302. Representative: Charles J. Williams, 1815 Front Street, Scotch Plains, NJ 07076. Contract, irregular. Such commodities as are dealt in by retail stores (except commodities in bulk) from points in MD, PA, NJ, NY, CT, RI, MA, and DC to the facilities of United States Packing & Shipping Co., Inc., at Jersey City, NJ, under continuing contract(s) with United States Packing & Shipping Co., Inc., of Jersey City, NJ. Supporting shipper: United States Packing & Shipping Co. of Jersey City, NJ 07302.

MC 148292 (Sub-1-4TA), filed June 16, 1980. Applicant: J. POSA INC., P.O. Box 335, Elmont, NY 11003. Representative: Terrell C. Clatk, P.O. Box 25, Stanleytown, VA 24168. *Paper and paper products and woodpulp,* from West Point, VA to points in CT, DE, MA, ME, MD, MI, NH, NJ, NY, OH, PA, RI, VT, and WV. Supporting shipper: The Chesapeake Corp. of Virginia, P.O. Box 311, West Point, VA 23181.

MC 104675 (Sub-1-1TA), filed June 16, 1980. Applicant: FRONTIER DELIVERY, INC., 620 Elk St., Buffalo, NY 14210. Representative: Ronald W. Malin, Bankers Trust Bldg., Jamestown, NY 14701. *Chemicals and petroleum products,* in bulk, from all points in NJ and Philadelphia, PA to all points in NY. Supporting shippers: Solvents & Petroleum Service, Inc., 1405 Brewerton Rd., Syracuse, NY 13208 and ARCO Petroleum Products Co., Div. of Atlantic Richfield, Co., 515 S. Flower St., Los Angeles, CA 90071.

MC 037216 (Sub-1-1TA), filed June 16, 1980. Hearing site: Boston, Mass. Applicant: M. H. WINN TRUCKING CO., INC., 195 New Boston Street, Woburn, Massachusetts 01801. Representative: Robert M. Winn, Vice President, M. H. Winn Trucking Co. Inc., 195 New Boston Street, Woburn, Mass. 01801. *Electrical and electronic equipment, parts and materials and supplies used in the manufacture, processing, distribution and sale and use of such commodities, including computers and parts thereof, data processing equipment, calculators and parts thereof.* Between points in MA, the NH Counties of Cheshire, Hillsborough, Merrimac, Rockingham and Stratford, and the RI Counties of Kent and Providence.

MC 128343 (Sub-1-7), filed June 16, 1980. Applicant: C-LINE, INC., Tourtellot Hill Road, Chepachet, Rhode Island 02814. Representative: Ronald N. Cobert, Esq., 1730 M Street NW., Suite 501, Washington, D.C. 20036. *Contract carrier: Irregular routes: Such commodities as are dealt in, used by or distributed by manufacturers and distributors of plastic and plastic products,* between the facilities of Superior Plastic Products Corp., at or near Cumberland, RI, on the one hand, and, on the other, Bell, Santa Fe Springs, and Tracy, CA, Broadview and Chicago, IL, Mechanicsburg, PA, Memphis, TN, Norfolk, VA and points in Cumberland County, PA. Restriction: the operations authorized above are limited to a transportation service to be performed under a continuing contract or contracts with Superior Plastic Products Corp. (Supporting shipper: Superior Plastic Products Corp.)

MC 151044 (Sub-1-1TA), filed June 16, 1980. Applicant: MIELE'S EXPRESS, INC., 23 William Road, Holbrook, MA 02043. Representative: Robert G. Parks, 20 Walnut Street, Suite 101, Wellesley Hills, MA 02181. *Contract, irregular:* (1) *processed, cured or smoked meats and poultry,* and (2) *equipment, material and supplies* used in the processing and distribution of the commodities named in (1) above, in vehicles equipped with mechanical refrigeration, between the facilities of Colonial Provision Co., Inc., at Boston, MA, on the one hand, and, on the other, points in MD, NY and PA. Supprting shipper: Colonial Provision Co., Inc., of Boston, MA 02125.

MC 145115 (Sub-1-3TA), filed June 16, 1980. Applicant: NY., NJ., CONN., FREIGHT & MESSENGER CORP., 351 West 38th Street, New York, N.Y. 10018. Representative: Ronald I. Shapss, Esq., 450 Seventh Avenue, New York, N.Y. 10001. Authority sought: contract carrier irrgular routes, *such merchandise as is dealt in by retail department stores,* between Des Plaines, IL., on the one hand, and, on the other, Charlotte, N.C. and Los Angeles, CA., under a continuing contract or contracts with Wieboldt's Stores, Inc. Supporting shipper: Wieboldt Stores, Inc., 300 S. Wieboldt Drive, Des Plaines, IL.

MC 34087 (Sub-1-1TA), filed June 16, 1980. Applicant: NORMAN HILLS, Rd. # 1 McAllister Road, Fredonia, NY 14063. Representative: Normal Hills, Route 60, Fredonia, NY 14063. Contract, Irregular. *Lubricating Oils and Greases; Carbon, Gum, or Sludge Removing Compounds, Automotive Filters, Valves, and Parts; Fender Covers; Brake Fluids and Compressor Oils; Antifreeze and Engine Coolant Preparations; Cleaning, Scouring, Washing, Buffing, or Polishing Compounds (except commodities in bulk), and Materials, Equipment and Supplies* used in the manufacture and distribution of all the above between points in that part of the U.S. on and East of a line beginning at the mouth of the Mississippi River and extending along the Mississippi River to its junction with the Western Boudnary of Itasca County, MN, then northward along the Western boundaries of Itasca and Koochiching Counties, MN, to the International boundary line between the U.S. and CD. Supporting shipper: STP Corp., 459 Lexington Ave., Painesville, OH 44077.

MC 146119 (Sub-1-2TA), filed June 16 1980. Applicant: WINSTON COACH CORP., 1650 Sycamore Ave., Bohemia, NY 11716. Representative: Sidney J. Leshin, 575 Madison Ave., 212-Plaza 9-3700, New York, NY 10022. *Passengers in nonscheduled special operations* beginning and ending between points in the Counties of Nassau and Suffolk, NY and extending to Atlantic City, NJ. Supporting shipper: There are 10 supporting witnesses.

MC 143127 (Sub-1-12TA), filed June 16, 1980. Applicant: K. J. TRANSPORTATION, INC., 6070 Collett Rd., Victor, NY 14564. Representative: Linda A. Calvo (same address as applicant). *Paper articles,* from Ft. Atkinson, WI to Auburn, Fulton, and S. Volney, NY. Supporting shipper: Philip Morris Industrial, Inc., 4200 N. Holton St., Milwaukee, WI 53201.

MC 016003 (Sub-1-1TA), filed June 13, 1980. Applicant: TUCKER'S EXPRESS SERVICE, INC., Woodbine Ave., RFD 1, Avenel, NJ 07001. Representative: George A. Olsen, P.O. Box 357, Gladstone, NJ 07934. *Automative parts, equipment and supplies (except in bulk),* between points in NJ, on the one hand, and, on the other, points in the Philadelphia, PA Commercial Zone. Supporting shipper(s): AC Delco Division General Motors Corp., 400 Renaissance Center, Detroit, MI 48243.

MC 151010 (Sub-1-1TA), filed June 16, 1980. Applicant: COASTAL WOOD TREATING, LTD., Fredericton R.R. 5, New Brunswick, Canada. Representative: John E. Hess, Esq., Eaton, Peabody, Bradford & Veague, P.O. Box 1210, Merrill Center, Bangor, ME 04401. *Contract carrier,* regular routes, (1) *rough and surfaced lumber and timber, barked pine poles, bulk wood waste, utility poles, and pressure treated timbers* from Patten, ME, over ME Hwy 159, then along Interstate Hwy 95 to ports of entry on the International Boundary line between the United States and Canada located at or near Houlton, ME, and return over the same route; (2) *utility poles* from various

points along the route (ME Hwy. 6) from Dover-Foxcroft, ME to ports of entry on the International Boundary line between the United States and Canada located at or near Vanceboro, ME; and (3) *utility poles* from various points along the route (ME Hwy 9 and U.S. Hwy 2) from Rumford, ME to ports of entry on the International Boundary line between the United States and Canada located at near Calais, ME under a continuing contract or contracts with County Forest Products, Inc., Patten, ME, Atlantic Pressure Treating, Ltd., Fredericton, New Brunswick, Canada, and Maritime Wood Pressure Ltd., Truro, Nova Scotia, Canada.

MC 148793 (Sub-1-4TA), filed June 13, 1980. Applicant: M & L MESSENGER SERVICE, INC., Jewel Lane, New Fairfield, CT 06810. Representative: James M. Burns, 1383 Main St., Suite 413, Springfield, MA 01103. (1) *Various documents and electric materials,* between Bethel, CT, on the one hand, and, on the other, points in MA and New York, NY, restricted to transportation of packages not exceeding 100 pounds per package originating at or destined to the facilities of Computer Optics, Inc., Bethel, CT. Supporting shipper: Computer Optics, Inc., Bethel, CT.

MC 123274 (Sub-1-1TA) filed June 13, 1980. Applicant: MARSHALL SERVICE, INC., Pearl St., Newfield, NJ 08344. Representative: George A. Olsen, P.O. Box 357, Gladstone, NJ 07934. *Lubricating oil in tank vehicles,* from Philadelphia, PA, and Bayonne and Paulsboro, NJ, to Boston and Leominster, MA and their Commercial Zones. Supporting shipper(s): Pennsylvania Petroleum Products Company, 25 East Shunk St., Philadelphia, PA 19148.

MC 151030 (Sub-1-1TA) filed June 13, 1980. Applicant: MARJO TRUCKING, INC., P.O. Box 2311, Newburgh, NY 12550. Representative: George A. Olsen, P.O. Box 357, Gladstone, NJ 07934. *Metal and rubber products,* between points in the New York, NY Commercial Zone, on the one hand, and, on the other, Windsor, CT; Chicago, IL; Indianapolis, IN; Louisville, KY; Boston, MA; Detroit, MI; Kansas City, MO; Omaha, NE; Buffalo, NY; Cincinnati and Cleveland, OH; and Miami and Oklahoma City, OK. Supporting shipper(s): Weather Rite Inc., 125 Enterprise Ave., Secaucus, NJ 07094.

The following applications were filed in Region 2. Send protests to: ICC, Federal Reserve Bank Bldg., 101 N. 7th St., Room 620, Philadelphia, PA 19106.

MC 121372 (Sub-II-3TA) filed June 13, 1980. Applicant: EXPRESS TRANSPORT, INC. 1333 W. 7th St., Cincinnati, OH 43205. Representative: Paul F. Berry, 275 E. State St., Columbus, OH 43215. *Iron and steel and iron and steel articles* between the Cincinnati, OH commercial zone on the one hand, and, on the other, the Chicago, IL commercial zone for 180 days. An underlying ETA seeks 90 days authority. Supporting shippers: Frederick Steel, 200 W. North Bend Rd., Cincinnati, OH; Interlake, Inc., 9th & Lowell St., Newport, KY 41072; X-tex, Inc., 211 Townsend St., Cincinnati, OH; Southwestern OH Steel, 903 Beele Ave., Hamilton, OH 45012.

MC 145235 (Sub-II-1TA) filed June 12, 1980. Applicant: DUTCH MAID PRODUCE, INC., RD #2, Willard, OH 44890. Representative: David A. Turano, 100 E. Broad St., Columbus, OH 43215. Contract, irregular: *(1) foodstuffs and (2) materials, equipment and supplies used in the processing and distribution of the commodities in (1) above (except commodities in bulk)* between the facilities of Bil-Mar Foods, Inc. and its subsidiaries at or near Storm Lake, IA; Zeeland, MI and Garrettsville, OH, on the one hand, and, on the other, points in the United States (except AK and HI) for the account of Bil-Mar Foods, Inc. for 180 days. An underlying ETA seeks 90 days authority. Supporting shipper: Bil-Mar Foods, Inc., 8300 96th Ave., Zeeland, MI 49464.

MC 146391 (Sub-II-2 TA), filed June 12, 1980. Applicant: Edward P. Casterline, d.b.a. CASTERLINE TRUCKING, 444 Roosevelt St., Exeter, PA 18643. Representative: Edward P. Casterline (Same as applicant). Contract, irregular: *Perforated metals,* from Wyoming, PA to Russellville, AR and Alvin, TX. Supporting shipper: Diamond Mfg. Co., 243 W. 8th St., Wyoming, PA 18644.

MC 142559 (Sub-II-17 TA), filed June 13, 1980. Applicant: BROOKS TRANSPORTATION, INC., 3830 Kelley Ave., Cleveland, OH 44114. Representative: John P. McMahon, 100 E. Broad St., Columbus, OH 43215. (1) *Household and kitchen appliances and accessories,* (2) *audio electronic products and accessories,* (3) *personal care appliances,* and (4) *materials and supplies used in the manufacture, sale and distribution of* (1), (2), and (3) above, (except commodities in bulk) between pts. in the U.S., restricted to shipments originating at or destined to the facilities of General Electric Co., Housewares & Audio Business Division for 180 days. Supporting shipper: General Electric Co., Housewares & Audio Business Div., 1285 Boston Ave., Bridgeport, CT 06602.

MC 94265 (Sub-II-12 TA), filed June 13, 1980. Applicant: BONNEY MOTOR EXPRESS, INC., P.O. Box 305, Rt. 460 W., Windsor, VA 23487. Representative: Clyde W. Carver, P.O. Box 720434, Atlanta, GA 30328. *Meat, meat products and meat byproducts as described in Sect. A of Appendix I to the report in Descriptions in Motor Carrier Certificates 61 M.C.C. 209 and 766* from Smithfield, VA to pts. in AL, FL, GA, NC, SC, NY, NJ, NH, ME, DE, PA, MD, MS, LA and TX. An underlying ETA seeks 90 days authority. Supporting shippers: Swift & Co., 115 W. Jackson Blvd., Chicago, IL 60604; ITT Gwaltney, Inc., P.O. Box 489, Smithfield, VA 23430; The Smithfield Packing Co., Inc., P.O. Box 447, Smithfield, VA 23430.

MC 5285 (Sub-II-1 TA), filed June 13, 1980. Applicant: BAYSE TRANSPORTATION SERVICE, INC., P.O. Box 1002, Salem, VA 24153. Representative: Charles W. Bayse (Same as applicant). *Heavy and industrial machinery, contractors' machinery, equipment, materials and supplies, and storage vans* between pts, in VA and NC. An underlying ETA seeks 90 days authority. Applicant intends to tack. Supporting Shippers: There are 5 supporting shippers. Their statements may be examined at the ICC Regional Office in Phila., PA.

MC 139805 (Sub-II-1 TA), filed April 30, 1980. Originally published in Federal Register dated May 14, 1980. Applicant: B MOTOR FREIGHT INC., 451 Old Airport Rd., New Castle, DE 19720. Representative: Dennis N. Barnes, 1800 M St., NW, Washington, DC 20036. Contract, irregular, *General commodities (excluding bulk commodities and household goods) and hazardous materials (excluding Class A and B explosives) comprising products manufactured or purchased by E. I. DuPont de Nemours & Co., Inc.,* between the shipper's facilities, agents, suppliers, processors, distributors, and customers located at all pts. within the states of ME, NH, VT, MA, CT, RI, NY, MD, WV, OH, IN, MI, MN, WI, IL, IA, MO, KY, NC, SC, MS, AR, AL, LA, & FL, under a continuing contract with DuPont. Applicant intends to tack to all pts. in the states of NJ, DE, PA, TN, GA & VA. Supporting shipper: E. I. DuPont de Nemours & Co., Inc., Wilmington, DE 19898. The purpose of this republication is to reflect applicant's intent to tack which was omitted from first publication.

MC 146820 (Sub-II-1TA), filed May 8, 1980. Originally published in Federal Register of June 4, 1980. Applicant: B & G TRUCKING, INC., P.O. Box 581, Worthington, OH 43085. Representative: David A. Turano, 100 E. Broad St., Columbus, OH 43215. Contract, irregular, *(1) Hose; and (2) equipment,*

materials and supplies used in the manufacture of the commodities in (1) except commodities in bulk) between the facilities of Swan Hose Div. Amerace Corp. at Bucyrus, OH, Elton, TN and Lexington, TN for 180 days. An underlying ETA seeks 90 days authority. Supporting Shipper: Swan Hose Div. Amerace Corp., 8929 Columbus Pike, P.O. Box 509, Worthington, OH 43085. The purpose of this republication is to change Lexington, TX to TN.

MC 150339 (Sub-2-2TA), filed June 13, 1980. Applicant: PIONEER TRANSPORTATION SYSTEMS, INC., 151 Easton Blvd., Preston, MD 21655. Representative: J. Cody Quinton, Jr., (Same as applicant). Contract; irregular, *Iron, steel and alumium articles,* and *materials, equipment and supplies used in the manufacture and distribution thereof,* (1) between Youngstown, Hicksville and Westerville, OH, Benton, AR, Hagerstown, MD, Kings Mountain, NC, Houston, TX, Salt Lake City, UT, Berkeley Springs, WV, Chicago, IL, Orange, CA, Niles, OH, Canton, OH, Pulaski, PA and Export, PA, and (2) between points named in (1) above on the one hand, and, on the other, all points in the U.S. (except AK and HI), under continuing contract with Commercial Shearing, Inc. Supporting Shipper(s): Commercial Shearing, Inc., 1775 Logan Ave., Youngstown, OH 44501.

MC 107012 (Sub-II-47TA), filed June 12, 1980. Applicant: NORTH AMERICAN VAN LINES, INC., 5001 U.S. Hwy. 30 West, P.O. Box 988, Fort Wayne, IN 46801. Representative: David D. Bishop (Same as applicant). *Institutional furniture and parts and accessories for institutional furniture* from pts. in US to the facilities of Hill-Rom Co., Inc. at Batesville, IN for 180 days. An underlying ETA seeks 90 days authority. Supporting shipper: Hill-Rom Co., Inc., Highway 46, Batesville, IN 47006.

Note.—Common control may be involved.

MC 144859 (Sub-II-3), filed June 9, 1980. Applicant: SCOTT PALLETS, INC., Box 341, Amelia, VA 23002. Representative: Calvin F. Major, 200 W. Grace St., Richmond, VA 23220. Contract; Irregular (1) *Nails, wire and steel related products;* and (2) *Steel bars, shapes, sheet and plate* (1) From the Cleveland, OH area to Baltimore, MD area; (2) From Pittsburgh and commercial zone, Fairless Hills, Homestead, Aliquippa, Beaver Falls and Carnegie, PA; Wierton and Beech Bottom, WV; Cleveland and Martins Ferry, OH; Sparrows Point, Baltimore and commercial zone, MD; To Ashland, VA, for 180 days. An underlying ETA seeks 90 days authority. Supporting shippers: Hillwood Manufacturing Co., 21700 St. Clair Ave., Cleveland, OH 44117, Steel Service, Inc., 204 S. Leadbetter Rd., Ashland, VA 23005.

MC 41951 (Sub-II-2TA), filed June 6, 1980. Applicant: WHEATLEY TRUCKING, INC., P.O. Box 458, Cambridge, MD 21613. Representative: Gary E. Thompson, 4304 East-West Highway, Washington, DC 20014. *Sugar, in packages,* from the facilities of National Sugar Refining Company at or near Philadelphia, PA, to points in DE, MD, and VA, east of the Chesapeake Bay and south of the Chesapeake and Delaware Canal for 180 days. An underlying ETA seeks 90 days authority. Supporting shipper(s): National Sugar Refining Co., 1037 N. Delaware Ave., Philadelphia, PA 19125.

MC 119875 (Sub-II-2), filed June 11, 1980. Applicant: WAR-HUNT TRUCKING CO., INC., R.D. 8, Box 129, Allentown, PA 18104. Representative: John C. Fudesco, 1333 New Hampshire Ave., NW, Suite 960, Washington, DC 20036. *Confectionery, confectionery products, and materials, supplies and ingredients used in the manufacture and distribution thereof (except in bulk), in vehicles equipped with mechanical refrigeration.* Between points in Hackettstown, Elizabeth and its commercial zone, and Gloucester City, NJ, Elizabethtown, PA and its commercial zone, Chicago, IL, and its commercial zone, Cockeysville, MD, and Foxboro and Boston, MA, on the one hand, and, on the other, points in CT, KY, ME, MD, MA, NH, NJ, NY, OH, PA, RI, VT, Chicago, IL and its commercial zone, and the District of Columbia, for 180 days. Restrict: Restricted to the transportation of traffic originating at or destined to the facilities of M&M/Mars Division of Mars, Inc. An underlying ETA seeks 90 days authority. Supporting shipper: M/M Mars Division of Mars, Inc., High Street, Hackettstown, NJ 07840.

MC 14215 (Sub-II-7TA), filed June 11, 1980. Applicant: SMITH TRUCK SERVICE, INC., P.O. Box 1329, Steubenville, OH 43952. Representative: John L. Alden, 1396 W. Fifth Ave., Columbus, OH 43212. *Sand,* from Akron, OH to points in IL, IN, MI, NY, PA, WI and WV, for 180 days. Supporting shipper: Manley Bros. of Indiana, Inc., Chesterton, IN 46304.

MC 126824 (Sub-II-1TA), filed June 6, 1980. Applicant: JOHN TINNEY, d.b.a., JOHN TINNEY DELIVERY SERVICE, 802 Connell Ave., Yeadon, PA 19050. Representative: Raymond A. thistle, Jr., Five Cottman Court, Homestead Rd. & Cottman St., Jenkintown, PA 19046. *General commodities* (excluding commodities in bulk, Class A and B explosives and commodities injurious to other lading), from Philadelphia, PA and the Philadelphia, PA Commercial Zone to points in PA on and south and east of U.S. Route 22 starting at the PA-NJ border, then Interstate Highway Route 78 and then Interstate Highway Route 81 to the PA-MD border including the cities of Easton and Allentown, PA, to points in DE north of DE State Highway Route 8, including Dover, DE, to points in NJ in and south of Mercer, Middlesex and Monmouth Counties, NJ for 180 days. An underlying ETA seeks 90 days authority. Supporting shippers: Forster Mfg. Co., Inc., Depot St., Wilton, ME 04294; Hoffman Engineer Co., 9th & Tyler, Anoka, MN 55303; Warner-Lambert Co., 201 Tabor Rd., Morris Plains, NJ 07950; Leaf Confectionery, Inc., 1155 North Cicero Ave., Chicago, IL 60651; J.P. Stevens & Co., Inc., P.O. Box 20087, Greensboro, NC 27420; Wm. Wrigley, Jr., Co., 410 N. Michigan Ave., Chicago, IL 60611.

MC 109124 (Sub-2-5TA), filed May 27, 1980. Applicant: SENTLE TRUCKING CORPORATION, P.O. Box 7850, Toledo, OH 43619. Representative: James M. Burtch, 100 E. Broad St., Suite 1800, Columbus, OH 43215. (1) *Refractory products and materials* (a) from Negley, OH to Alloy, Graham, and New Haven, WV; Bridgeport, AL; Memphis, TN; and Calvert City, KY; and (b) from Pittsburgh, PA to Huron, OH, and (2) *Clay* from Negley, OH to Woodstock, TN, for 180 days. Supporting shippers: Erie Furance Supply, Inc., 309 Cleveland Rd., W., Box 360, Huron, OH 44839; Lakeway Manufacturing, Inc., 309 Cleveland Rd., W., Box 486, Huron, OH 44839.

Originally published in Federal Register of June 11, 1980. MC 150896 (Sub-II-1TA), filed May 28, 1980. Applicant: HUMCO, INC., Suite TC-106, East Furnance Branch Rd, Glen Burnie, MD 21061. Representative: Richard P. Taylor, 1250 Connecticut Ave., NW, Washington, DC 20036. *New and used automobiles and small trucks and vans* in initial and secondary movements in professional driveaway service between points in CT, DE, FL, IL, MD, NJ, NY, NC, OH, PA, SC, VA, WV and DC, for 180 days. An underlying ETA seeks 90 days authority. Supporting shipper(s): U.S. Govt. Despatch Agency, 403 U.S. Custom House Bldg., Baltimore, MD 21202; Masterack Div. of Leggett & Platt, Inc., 302 E. Church St., Frederick, MD 21701. The purpose of this re-publication is to show the State of Maryland—MD instead of Minnesota—MN and

substitute the word *initial* for *subsequent.*

MC 13134 (Sub-II-8TA), filed June 6, 1980. Applicant: GRANT TRUCKING, INC., Box 256, Oak Hill, OH 45656. Representative: James M. Burtch, 100 E. Broad St., Columbus, OH 43215. (1) *Mine machines and parts for mine machines, and (2) equipment, materials and supplies used in the manufacture and distribution of the commodities in (1) above (except commodities in bulk).* between pts in and east of MN, IA, MO, AR, and LA, restricted to traffic originating at or destined to the facilities used by National Mine Service Company, for 180 days. Supporting shipper: National Mine Service Company, P.O. Box 1447, Ashland, KY 41101.

MC 13134 (Sub-II-9TA), filed June 11, 1980. Applicant: GRANT TRUCKING, INC., Box 256, Oak Hill, OH 45656. Representative: James M. Burtch, 100 E. Broad St., Columbus, OH 43215. *Refractories, refractory products and materials and supplies used in the manufacture and shipping thereof,* between South Rockwood, MI, Carnegie, PA, Youngstown, OH, and Crown Point, IN, on the one hand, and, on the other pts in and east of ND, SD, NE, CO, OK and TX. Restricted to traffic originating at or destined to the facilities of BMI, Inc. and its subsidiaries Gunning Refractories, Inc. and Lawrence Refractores Co., for 180 days. Supporting shippers: Gunning Refractories, Inc., P.O. Box 38, Pedro, OH 45659; Lawrence Refractories, Inc., P.O. Box 38, Pedro, OH 45659.

MC 13134 (Sub-II-10TA), filed June 6, 1980. Applicant: GRANT TRUCKING, INC., Box 256, Oak Hill, OH 45656. Representative: James M. Burtch, 100 E. Broad St., Columbus, OH 43215. *Structural steel and materials and supplies used in the manufacture of structural steel* between Nashville, TN, on the one hand, and, on the other, points in IL, IN, KY, MI, MD, OH, PA, VA, and WV. Restricted to traffic originating at or destined to the facilities of Volunteer Structures, Inc., for 180 days. Supporting shipper: Volunteer Structures, Inc., 4108 Dakota Avenue, Nashville, TN 37209.

MC 65475 (Sub-II-4TA), filed June 11, 1980. Applicant: JETCO, INC., 4701 Eisenhower Ave., Alexandria, VA 22304. Representative: J. G. Dail, Jr., P.O. Box LL, McLean, VA 22101. *Iron and steel articles, and materials, equipment, and supplies* used in the manufacture and distribution of iron and steel articles (except commodities in bulk), between Perth Amboy, NJ, on the one hand, and, on the other, points in the United States in and east of MN, IA, MO, AR, and LA, for 180 days. An underlying ETA seeks 90 days' authority. Supporting shipper: Raritan River Steel Company, P.O. Box 309, Perth Amboy, NJ 08862.

MC 150432 (Sub-II2TA), filed June 9, 1980. Applicant: H & M TRANSPORTATION, INC., U.S. 42 & 70, London, OH 43140. Representative: Owen B. Katzman, 1800 M Street, N.W., Suite 800—South, Washington, DC 20036. Contract-irregular: *Materials, equipment and supplies used in the construction and installation of tennis and racketball courts,* from Columbus, OH, to points in the US (except AK and HI), under a continuing contract with Wilson Courts, Inc., for 180 days. An underlying ETA seeks 90 days authority. Supporting shipper: Wilson Courts, Inc., 4216 Indianola Ave., Columbus, OH 43214.

MC 123387 (Sub-II-1TA), filed June 9, 1980. Applicant: E. E. HENRY, INC., 1128 South Military Highway, Chesapeake, VA 23320. Representative: Dwight L. Koerber, Jr., Suite 805, 666 Eleventh St., NW, Washington, DC 20001. *Malt beverages,* from Hammonton, NJ to NC, WV, VA, GA, SC, FL, and TN, and empty containers on return, for 180 days. An underlying ETA seeks 90 days authority. Supporting shipper: Eastern Brewing Corp., 334 Washington St., Hammonton, NJ 08037.

MC 121599 (Sub-II-1TA), filed June 10, 1980. Applicant: LAKE FRONT LINES, INC., 2643 Narrows Road, P.O. Box 618, Painesville, OH 44077. Representative: Lawrence E. Lindeman, 1032 Pennsylvania Building, Pennsylvania Ave. & 13th St., N.W., Washington, DC 20004. *Passengers and their baggage, express, mail, and newpapers over regular routes, in the same vehicle with passengers,* between Cleveland, OH, and Erie, PA, from Cleveland over Interstate Hwy 90 to Interstate Hwy 79, then over Interstate Hwy 79 to Erie, and return, serving all intermediate points. An underlying ETA seeks 90 days authority. There are 35 supporting shippers that may be examined at the Philadelphia Regional Office.

Note:—This application is directly related to concurrently filed applications by Peter Pan Bus Lines, Inc., Adirondack Transit Lines, Inc., and Western New York Motor Lines, Inc., whereby the applicants are collectively seeking authority to conduct through-bus operations between Boston, MA, and Cleveland, OH.

MC 148433 (Sub-II-1TA), filed June 12, 1980. Applicant: GENERAL PARTS EXPRESS, INC., P.O. Box 243, Hanover, MD 21076. Representative: Frank B. Hand, Jr., P.O. Drawer C, Berryville, VA 22611. Contract carrier; irregular route: *Automotive parts and automotive accessories and such commodities as are dealt in or used by distributors of automotive parts (except commodities in bulk),* between the facilities of General Motors Corporation (General Motors Parts Division), Parkway Industrial Center, Hanover, MD, on the one hand, and, on the other, points in Allegany, Ann Arundel, Baltimore, Caroline, Carroll, Calvert, Cecil, Charles, Dorchester, Frederick, Garrett, Hartford, Howard, Kent, Montgomery, Prince Georges, Queen Anne's, St. Mary's, Somerset, Talbot, Washington Wicomico, and Worcester Counties MD and Baltimore, MD for 180 days, under a continuing contract with General Motors Corporation (General Motors Parts Division). An underlying ETA seeks 90 days authority. Supporting shipper: General Motors Corporation, General Motors Parts Division, Parkway Industrial Center, P.O. Box 243, Hanover, MD 21076.

MC 123405 (Sub-II-2TA), filed June 13, 1980. Applicant: FOOD TRANSPORT, INC., R.D. #1, Thomasville, PA 17364. Representative: Christian V. Graf, 407 N. Front St., Harrisburg, PA 17101. *Confectionery* (in vehicles equipped with mechanical refrigeration), from the facilities of Katharine Beecher Candies at or near Manchester, PA, to points in the U.S. (except AK and HI), for 180 days. An underlying ETA seeks 90 days authority. Supporting shipper: Katharine Beecher Candies, P.O. Box 515, Manchester, PA 17345.

MC 116725 (Sub-II-1TA), filed June 13, 1980. Applicant: INDIAN VALLEY ENTERPRISES, INC., 855 Maple Ave., Harleysville, PA 19438. Representative: John W. Frame, Box 626, 2207 Old Gettysburg Rd., Camp Hill, PA 17011. *Foodstuffs (except commodities in bulk),* and *such materials, supplies and equipment used in the manufacture and distribution of foodstuffs,* between plant and warehouse facilities of La Choy Food Products, Division of Beatrice Foods Co., at Archbold, OH and Napoleon, OH, on the one hand, and, on the other, points in the U.S. in and east of MT, WY, CO and NM (except foodstuffs from Archbold, OH to points in CT, MA, NJ, NY, PA and RI, presently authorized), restricted to the transportation of traffic originating at the named origins and destined to the indicated destinations, for 180 days. An underlying ETA application seeks 90 days authority. Supporting shipper: La Choy Food Products, Div. of Beatrice Foods Co., 901 Stryker St., Archbold, OH 43502.

MC 80653 (Sub-II-1TA), filed June 9, 1980. Applicant: DAVID GRAHAM

COMPANY, P.O. Box 254 Old Route 13, Levittown, PA 19059. Representative: Lawrence E. Keenan (same address as above.) *Metal enclosures, stationary or mobile, materials, equipment and supplies used in the manufacture of metal enclosures* (except commodities in bulk), between the facilities of Pritchard King, of Baltimore, MD, on the one hand, and, on the other, points in the U.S. (except AK & HI), for 180 days. An underlying ETA seeks 90 days authority. Supporting shipper(s): Pritchard King Inc., 8840 Citation Rd., Baltimore, Md 21221.

MC 147681 (Sub-II-7TA), filed June 6, 1980. Applicant: HOYA EXPRESS, INC., P.O. Box 543, West Middlesex, PA 16159. Representative: David M. O'Boyle, 2310 Grant Bldg., Pittsburgh, PA 15219. *Preserved foodstuffs, and materials, equipment and supplies used in the manufacture, sale or distribution thereof* between Winchester and Timberville, VA and Martinsburg, WV on the one hand, and, on the other, points in KY, MA, MI, NY, OH and PA for 180 days. An underlying ETA seeks 90 days authority. Supporting shipper: National Fruit Product Co., P.O. Box 2040, Winchester, VA, 22601.

MC 115181 (Sub-II-2TA), filed June 5, 1980. Applicant: HAROLD M. FELTY, INC., R.D. #1, Box 148, Pine Grove, PA 17963. Representative: John W. Dry, 541 Penn St., Reading, PA 19601. *Brick and Clay Products,* from Flemington, NJ, to points in ME, VT, NH, MA, NY, CT, RI, PA, OH, WV, MD, NJ, DE and DC, and return. An underlying ETA seeks 90 days authority. Supporting shipper: Merritt Sales, P.O. Box 688, Flemington, NJ, 08822.

MC 115181 (Sub-II-3TA), filed June 6, 1980. Applicant: HAROLD M. FELTY, INC., R.D. #1, Box 148, Pine Grove, PA 17963. Representative: John W. Dry, 541 Penn St., Reading, PA 19601. *Coal,* from points in Dauphin County, PA, to New York City, NY, and points in DE, and return. An underlying ETA seeks 90 days authority. Supporting shippers: Meadowbrook Coal Co., R.D. #1, Lykens, PA 17048; Underkoffler Coal Service, Inc., Box 274, Lykens, PA 17048; Gassman Coal & Oil Co., Inc., Brown Pl. & E., 132nd St, Bronx, NY 10454.

MC 115181 (Sub-II-5TA), filed June 6, 1980. Applicant: HAROLD M. FELTY, INC., R.D. #1, Box 148, Pine Grove, PA 17963. Representative: John W. Dry, 541 Penn St., Reading, PA 19601. *Bakerage,* from Carteret, NJ, to points in Adams, Lancaster and York Counties, PA, and return. An underlying ETA seeks 90 days authority. Supporting shipper: International Bakerage, Inc., 3300 Northeast Expressway, Suite 1-M, Atlanta, GA 30341.

MC 124821 (Sub-II-15TA), filed June 13, 1980. Applicant: GILCHRIST TRUCKING, INC., 105 N. Keyser Ave., Old Forge, PA 18518. Representative: John W. Frame, Box 626, 2207 Old Gettysburg Rd., Camp Hill, PA 17011. *Sodium bicarbonate, in bags,* from the facilities of Church & Dwight, at Old Fort, OH and Green Springs, OH, to points in AL, CT, DC, DE, FL, GA, IL, IN, KY, LA, MA, MD, ME, MI, MN, MS, NC, NH, NJ, NY, OH, PA, RI, SC, TN, VA, VT, WI, and WV, for 180 days. Supporting shipper: Church & Dwight Co., Inc., P.O. Box 369, Piscataway, NJ 08854.

MC 124821 (Sub-II-14TA), filed June 6, 1980. Applicant: GILCHRIST TRUCKING, INC., 105 N. Keyser Ave., Old Forge, PA 18518. Representative: John W. Frame, Box 626, 2207 Old Gettysburg Rd., Camp Hill, PA 17011. *Chains, chain parts, sprockets, pulleys,* and *materials and supplies* used in connection with or incidental to the manufacture, sale or distribution of the above-named commodities, between the facilities of Atlas Chain and Precision Manufacturing Products at or near W. Pittston, PA, on the one hand, and, on the other, points in the United States (except AK and HI), for 180 days. An underlying ETA seeks 90 days authority. Supporting shipper: Atlas Chain & Precision Products, Inc., W. Pittston, PA. 18643.

MC 113666 (Sub-II-10TA), filed June 2, 1980. Applicant: FREEPORT TRANSPORT, INC., P.O. Drawer A, Freeport, PA 16229. Representative: R. Scott Mahood (same address as applicant). *Building materials,* between points in the United States in and east of the States WI, IL, KY, TN, and MS, for 180 days. Restricted to movements for and on behalf of Snavely Forest Products, Inc. An underlying ETA seeks 90 days authority. Supporting shipper: Snavely Forest Products, Inc., P.O. Box 9808, Pittsburgh, PA 15227.

MC 107012 (Sub-II-48TA), filed June 13, 1980. Applicant: NORTH AMERICAN VAN LINES, INC., 5001 U.S. Hwy. 30 West, P.O. Box 988, Forth Wayne, IN 46801. Representative: David D. Bishop (same as applicant). *Disposable medical supplies,* from the facilities of Convertors, a Division of American Hospital Supply Corp. at or near El Paso, TX to the facilities of American Hospital Supply Corp. at or near Englewood, CO; Salt Lake City, UT; San Diego, San Jose, and Los Angeles County, CA; Chicago, IL; Philadelphia, and Warrendale, PA; Baltimore, MD; Raleigh, NC; Wilsonville, OR; Phoenix, AZ, Bedford, MA; and Warehouse Point, CT (a suburb of Hartford) for 180 days. An underlying ETA seeks 90 days authority. Supporting shipper: Convertors, Division of American Hospital Supply Corp., 1 Butterfield Trail, El Paso, TX. 79906.

Note.—Common control may be involved.

MC 147681 (Sub-9TA), filed December 19, 1979. Previously published in Fed. Reg. 2/11/80 and again 6/3/80. Applicant: HOYA EXPRESS, INC., P.O. Box 543, R.D. #2, West Middlesex, PA 16159. Representative: Henry M. Wick, 2310 Grant Bldg., Pittsburgh, PA 15219. *Aluminum and zinc alloy ingots,* between Maple Heights, OH, on the one hand, and, on the other, points in IL, IN, KY, MI, NY, PA, and TN, for 180 days. An underlying ETA seeks 90 days authority. Supporting shipper: Aluminum Smelting & Refining Co., Inc., Certified Alloys Co., 5463 Dunham Rd., Maple Heights, OH 44137. The purpose of these republications was to reflect the type of carriage sought and to show protest address.

MC 97275 (Sub-II-2 TA), filed June 16, 1980. Applicant: ESTES EXPRESS LINES, 1405 Gordon Ave, Richmond, VA 23224. Representative: Harry J. Jordan, Suite 502, Solar, 1000 16th St NW., Washington, DC 20036. Common, regular: *general commodities, except those of unusual value, Classes A and B explosives, household goods as defined by the Commission, commodities in bulk, and commodities requiring special equipment,* (1) between Atlanta, GA, and the junction Interstate Hwy 85 and SC Hwy 59 at or near Fair Play, SC: Over Interstate Hwy 85, serving no intermediate points; (2) between Atlanta, GA, and the junction Interstate Hwy 20 and GA Hwy 77 at or near Siloam, GA: Over Interstate Hwy 20, serving no intermediate points; (3) between Atlanta, GA, and the junction Interstate Hwy 16 and GA Hwy 29 at or near Rockledge, GA: From Atlanta over Interstate Hwy 75 to junction Interstate Hwy 16, then over Interstate Hwy 16 to junction GA Hwy 29 at or near Rockledge, serving no intermediate points; and (4) between Atlanta, GA, and the junction U.S. Hwy 23 and U.S. Hwy 221 at Hazelhurst, GA: From Atlanta over Interstate Hwy 75 to junction Interstate Hwy 16, then over Interstate Hwy 16 to junction U.S. Hwy 23, then over U.S. Hwy 23 to junction U.S. Hwy 221 at Hazelhurst, serving no intermediate points. Applicant intends to tack this authority with existing authority to serve GA, SC, NC, VA, and DC and Baltimore, MD. Supporting shippers: There are 94 supporting shippers. Their statements may be

examined at the ICC Regional Office in Phila., PA.

MC 151055 (Sub-II-1TA), filed June 16, 1980. Applicant: DeFAZIO EXPRESS, INC., 1028 Springbrook Ave, Moosic, PA 18507. Representative: John L. Alfano, 550 Mamaroneck Ave, Harrison, NY 10528. *Contract,* irregular: *Such commodities as are dealt in by wholesale, retail and chain grocery stores and food business houses, equipment, supplies and materials used in the manufacture and distribution of the commodities herein (except commodities in bulk),* (1) from the facilities of Procter & Gamble Co. at Lackawanna, Luzerne and Wyoming Counties, PA, to Baltimore, MD, Washington, DC, and Orange County, NY; and (2) from the facilities of Procter & Gamble Co. at Baltimore, MD and Cockeysville, MD, to Broome, Chemung, and Tioga Counties, NY and Columbia, Lackawanna, Luzerne, Monroe, Montour, Northumberland, Wayne and Pike Counties, PA, *Restricted* to a transportation service to be performed under continuing contract(s) with Procter & Gamble Co. of Cincinnati, OH. Supporting shipper: Procter & Gamble Co., P.O. Box 599, Cincinnati, OH 45201.

Note.—Dual operations involved.

MC 110563 (Sub-II-4TA), filed June 16, 1980. Applicant: COLDWAY FOOD EXPRESS, INC., P.O. Box 747, State Rt. 29 N., Sidney, OH 45365. Representative: Victor J. Tambascia (same as applicant). *Candy, confectionery and confectionery products (except in bulk, in tank vehicles), and advertising matters and display materials when shipped with above,* from the facilities of Tootsie Roll, Inc., at Chicago, IL to points in CT, DE, MA, MD, NY, NJ, PA and RI for 180 days. Supporting shipper: Tootsie Roll Industries, Inc., 7401 S. Cicero Ave., Chicago, IL 60629.

MC 145545 (Sub-II-1TA), filed June 16, 1980. Applicant: CENTURY REEFER SERVICE, INC., 8 Main St., Salisbury, MA 01950. Representative: Chester A. Zyblut, 366 Executive Bldg., 1030 15th St. NW., Washington, D.C. 20005. *Drilling, hoisting and compressor parts and accessories* (except commodities which because of size or weight require the use of special equipment), from Claremont, NH to Wilson, NC. An underlying ETA seeks 90 days authority. Supporting shipper: Joy Machinery Co., Claremont, NH 03743.

MC 63417 (Sub-2-13TA), filed June 16, 1980. Applicant: BLUE RIDGE TRANSFER CO., INC., P.O. Box 13447, Roanoke, VA 24034. Representative: William E. Bain (same as applicant). *Gas or electrical appliances and parts, materials, supplies, and equipment used in the distribution or repair of applicances* from, the facilities of Whirlpool Corp. at Fort Smith, AR, to all pts. in the states of AL, DE, FL, GA, IL, IN, KY, LA, MD, MI, MS, MO, NJ, NY, NC, OH, OK, PA, SC, TN, TX, VA, WV, DC, for 180 days. Supporting shipper: Whirlpool Corp., 2000 US 33 N., Benton Harbor, MI 49022.

MC 108631 (Sub-2-2TA), filed June 13, 1980. Applicant: BOB YOUNG TRUCKING, INC., Schoenersville Rd. and Industrial Dr., Bethlehem, PA 18017. Representative: Alan Kahn, 1430 Land Title Bldg., Philadelphia, PA 19110. *Flue gas control dampers,* from the facilities of Lehigh Metal Fabricators, Inc., at Bethlehem, PA, to Erin, TN, for 180 days. An underlying ETA seeks 90 days authority. Supporting shipper(s): Lehigh Metal Fabricators, Inc., 1150 Mauch Chunk Rd., Bethlehem, PA 18018.

MC 110683 (Sub-2-4TA), filed June 12, 1980 Applicant: SMITH'S TRANSFER CORP., P.O. Box 1000, Staunton, VA 24401. Representative: Francis W. McInerny, 1000 16th St., NW, Washington, DC 20036. *Common; regular: Castings or forgings, iron or steel,* Serving Jackson and St. Joseph, MI, as off-route points in connection with carrier's authorized regular routes, for 180 days. Applicant intends to tack the authority sought herein with authority held under MC 110683. Applicant intends to interline at all present interchange points. Supporting shipper: The Budd Co., 506 Milligan Hwy., Johnson City, TN 37601.

MC 136077 (Sub-2-4TA), filed June 11, 1980. Applicant: REBER CORPORATION, 2216 Old Arch Rd., Norristown, PA 19401. Representative: Sheri B. Friedman, 1600 Land Title Bldg., 100 S. Broad St., Phila., PA 19110. *Colorbond masonry cement,* from the plant of Centurion Products Co. in Wayne Township, Schuylkill County, PA to points in NY, NJ, CN, DE, MD and VA for 180 days. Supporting shippers: Centurion Products Co., P.O. Box 150, Schuylkill Haven, PA 17972.

MC 145067 (Sub-2-3TA), filed June 12, 1980. Applicant: LAWRENCE E. SPAIDE, INC., P.O. Box 11, Avoca, PA 18640. Represnetative: Joseph F. Hoary, 121 S. Main St., Taylor, PA 18517. *Vinyl coated metal sheets,* from Scranton, PA to Auburn, WA, for 180 days. An underlying ETA seeks 90 days authority. Supporting shipper(s): Ramsey Products, Inc., E. Corey St., Scranton, PA 18505.

MC 110365 (Sub-2-2TA), filed June 12, 1980. Applicant: BRUCE W. TRENT, R.D. #1, Friedens, PA 15541. Representative: Jeremy Kahn, Suite 733, Investment Bldg., 1511 K St., NW., Washington, DC 20005. *Coal (filtercake), in bulk, in dump vehicles,* from the facilities of Intercarbon Coal Company, at or near Hooversville, PA to the facilities of Markar, Inc., at or near Morgantown WV, for 180 days. An underlying ETA seeks 90 days authority. Supporting shipper: Intercarbon Coal Co., P.O. Box 98, Hooversville, PA 15936.

MC 125720 (Sub-2-1TA), filed June 9, 1980. Applicant: GERALD I. WALKER, R.D. #4, Berlin, PA 15530. Representative: James F. Beener, 146 West Main St., Somerset, PA 15501. *Contract: Irregular: Potato chips; peanut, vegetable and soybean oil; pretzels; snacks* and *new or used empty containers or other incidental items used in the manufacturing of the above* from the plant site of Snyder's Potato Chips, Division of Curtice-Burns, Inc., Berlin, Somerset County, PA, to OH, WV, KY, NY, NJ, CT, MD, VA, DC, NC, IN, IL, DE and on return trips to the plant site in Berlin, Somerset County, PA for 180 days. Applicant intends to Tack the authority sought here with its existing authority. Supporting shipper(s): Snyder's Potato Chips, Div. of Curtice-Burns, Inc., P.O. Box 67, Berlin, PA 15530.

MC 107012 (Sub-2-49TA), filed June 17, 1980. Applicant: NORTH AMERICAN VAN LINES, INC., 5001 U.S. Hwy. 30 West, P.O. Box 988, Fort Wayne, IN 46801. Representative: David D. Bishop (same as applicant). *Absorbent cotton, cotton or rayon balls and bandages or dressings,* from the facilities of National Patent Development Corp. at or near Dayville, CT, to points in AR, FL, GA, IL, IN, MI, MO, NC, TN, TX and to Montgomery, AL; Tracey, CA; Kansas City, KS; Shreveport, LA; Hattiesburg, MS; Omaha, NE; Sparks, NV; Columbus, OH; Edmond, OK; Somerset, PA; N. Augusta, SC; Spokane, WA; and Nitro, WV for 180 days. An underlying ETA seeks 90 days authority. Supporting shipper: National Patent Development Corp., Acme/Chaston Div., Lake Road, Box 419, Dayville, CT 06241.

Note.—Common control may be involved.

MC 107012 (Sub-2-50TA), filed June 17, 1980. Applicant: NORTH AMERICAN VAN LINES, INC., 5001 U.S. Hwy. 30 West, P.O. Box 988, Fort Wayne, IN 46801. Representative: David D. Bishop (same as applicant). *Air filtration products* from the facility of Precisionaire Inc. at Dallas, TX and New Orleans, LA, to points in NM, CO, KS, OK, MO, AR, LA, MS, AL, TN and IL and from the facilities of Precisionaire Inc. at St. Petersburg, FL: Atlanta, GA and Charlotte, NC to points in IN, OH, NY, MA, PA, MD, DC, WV, VA, KY, TN, NC, SC, AL, GA and MS for 180 days.

An underlying ETA seeks 90 days authority. Supporting shipper: Precisionaire Inc., P.O. Box 7568, 2399 26th Ave. North, St. Petersburg, FL 33734.

Note.—Common control may be involved.

MC 136343 (Sub-2-8TA), filed June 18, 1980. Applicant: MILTON TRANSPORTATION, INC., P.O. Box 355, Milton, PA 17847. Representative: Herbert R. Nurick, P.O. Box 1166, Harrisburg, PA 17108. *Scrap paper and paper products used in the manufacture of printing paper, other than newsprint,* from Baltimore, MD; Boston, Tauton, West Hanover and Westford, MA; Merrimac, NH; Albany, Binghamton, Depew and New York, NY (and its commercial zone); Eden and Hillsboro, NC; Bethlehem, Bloomsburg, Fairfield, Manchester, Scranton, Tarentum and York, PA; Brattleboro, VT; Berryville and Franconia, VA; and Washington, DC to the facilities of Miami Paper Corp., West Carrollton, OH for 180 days. An underlying ETA seeks 90 days authority. Supporting shipper: Miami Valley Paper Corp., P.O. Box 66, West Carrollton, OH 45449.

MC 146361 (Sub-II-7TA), filed June 12, 1980. Applicant: WOLTER TRUCK LINES, INC., R.D. 1, Box 197, Greenwood, DE 19950. Representative: Chester A. Zyblut, 366 Executive Bldg., 1030 15th St., NW., Wash., DC 20005. *Fish meal, in bulk, in dump vehicles,* from Reedville, VA, Morehead City and Southport, NC, to points in DE and NJ for 180 days. An underlying ETA seeks 90 days authority. Supporting shipper: National Agricultural Commodities, Cape Charles, Va 23310.

MC 14314 (Sub-II-2TA), filed June 18, 1980. Applicant: DUFF TRUCK LINE, INC., P.O. Box 359, Broadway and Vine Sts., Lima, OH 45802. Representative: R. L. Anderhalt, Jr. (same address as applicant). Common, regular: *general commodities (except those of unusual value, classes A and b explosives, household goods as defined by the Commission, commodities in bulk and those requiring special equipment)* serving Ferdinand, IN, as an off-route point in connection with the other authorized regular route operations of applicant. An underlying ETA seeks 90 days authority. Applicant intends to tack and interline. Supporting shipper(s): Aristokraft, P.O. Box 420, Jasper, IN 47546. Best Chairs, Inc., P.O. Box 158, Ferdinand, IN 47532.

MC 110525 (Sub-II-16TA), filed June 18, 1980. Applicant: CHEMICAL LEAMAN TANK LINES, INC., 520 E. Lancaster Ave., Downingtown, PA 19335. Representative: Thomas J. O'Brien (same address as applicant). *Chemicals, in bulk, in tank vehicles* from Pascagoula, MS to ports of entry between the US and Mexico. Supporting shipper: First Chemical Corp., P.O. Box 1427, Pascagoula, MS 39567.

MC 150511 (Sub-II-2TA), filed June 17, 190. Applicant: BETTER HOME DELIVERIES, INC., 3700 Park East Dr., Cleveland, OH 44122. Representative: J. A. Kundtz, 1100 National City Bank Bldg., Cleveland, OH 44114. *Contract, irregular: Such merchandise as is dealt in by retail department stores,* restricted to residential deliveries, between Valley Cottage, NY, on the one hand and, on the other, points in NJ on and north of Rt. 33, under continuing contract(s) with J. C. Penney Co., Inc., for 180 days. An underlying ETA seeks 90 days authority. Supporting shipper: J. C. Penney Co., Inc., 1122 Rt. 22, Mountainside, NJ 07091.

MC 138000 (Sub-II-15TA), filed June 16, 1980. Applicant: ARTHUR H. FULTON, INC., P.O. Box 86, Stephens City, VA 22655. Representative: Dixie C. Newhouse, P.O. Box 1417, 1329 Pennsylvania Ave., Hagerstown, MD 21740. *Non-Alcoholic Beverage Mixes,* from Byhalia, MS, including its commercial zone, to points in and east of WI, IL, TN, KY and MS, for 180 days. An underlying ETA seeks 90 days authority. Supporting shipper: Master of Mixes, 10975 Grandview Street, Suite 120, Corporate Woods 27, Overland Park, KS 66210.

MC 125335 (Sub-2-II TA), filed June 16, 1980. Applicant: GOODWAY TRANSPORT, INC., P.O. Box 2283, York, PA 17405. Representative: Gailyn L. Larsen, P.O. Box 82816, Lincoln, NE 68501. *Foodstuffs,* from Exmore, VA, to points in FL, for 180 days. An underlying ETA seeks 90 days authority. Supporting Shipper: Southland Frozen Foods, Inc., P.O. Box 1000, Plant City, FL.

MC 13134 (Sub-2-10TA), filed June 16, 1980. Applicant: Grant Trucking, Inc., P.O. Box 256, Oak Hill, OH 45656. Representative: Joe Haydon, Grant Trucking, Inc., P.O. Box 256, Oak Hill, OH 45656. *General commodities,* except those of unusual value, Classes A and B explosives, household goods as defined by the Commission, and those injurious or contaminating to other lading, between the facilities of C-E Industrial Products Group Division of Combustion Engineering, Inc. and points in and east of ND, SD, NE, CO, OK and TX, for 180 days. Supporting shipper: C-E Industrial Products Group, Division of Combustion Engineering, Inc., P.O. Box 828, Valley Forge, PA 19482.

MC 124821 (Sub-2-16TA), filed June 16, 1980. Applicant: GILCHRIST TRUCKING, INC., 105 N. Keyser Ave, Old Forge, PA 18518. Representative: John W. Frame, Box 626, 2207 Old Gettysburg Road, Camp Hill, PA 17011. *General commodities (except commodities in bulk, in tank vehicles, used household furniture, commodities the transportation of which require the use of special equipment, automobiles, trucks and buses as described in the Report and Descriptions in Motor Carrier Certificates, 61, MCC 209 and 766, and explosives),* between points in the U.S., restricted to the transportation of traffic originating at or destined to the facilities utilized by International Paper Company, for 180 days. An underlying ETA seeks 90 days authority. Supporting shipper: International Paper Company, 220 East 42nd Street, New York, NY 10017.

MC 150939 (Sub-2-2TA), filed June 17, 1980. Applicant: GEMINI TRUCKING, INC., 1533 Broad Street, Greensburg, PA 15601. Representative: William A. Gray, 2310 Grant Building, Pittsburgh, PA 15219. *Such merchandise as are dealt in by retail variety, department and drug stores, and equipment, materials and supplies used in the conduct of such business* (except commodities in bulk), between North Huntington Township, Westmoreland County, PA, on the one hand and, on the other, points in OH and MI, under a continuing contract or contracts with Fishers Big Wheel, Inc. of New Castle, PA for 180 days. An underlying ETA seeks 90 days authority. Supporting shipper: Fishers Big Wheel, Inc., 102 Nesbitt Road, New Castle, PA 16105.

MC 141723 (Sub-II-1 TA), filed June 16, 1980. Applicant: Federalsburg Transit, Co., Inc., P.O. Box 433, Federalsburg, MD 21632. Representative: Walter T. Evans, 7961 Eastern Avenue, Silver Spring, MD 20910. (1) *shingles* from Quakertown and Philadelphia, PA to points in the Salisbury, MD commercial zone and (2) *gypsum board* from Wilmington, DE to points in the Salisbury, MD commercial zone for 180 days. An underlying ETA seeks 90 days authority. Supporting shipper: Georgia Pacific Corporation, P.O. Box 1597, Salisbury, MD 21801.

MC 79550 (Sub-II-2TA), filed June 16, 1980. Applicant: ERSKINE TRUCKING, INC., 6210 Center Rd., Lowellville, OH 44436. Representative: James Duval, P.O.B. 97, 220 W. Bridge St., Dublin, OH 43017. *Roofing materials, insulation and materials, equipment and supplies used in the manufacture, sale, distribution and installation thereof,* (except commodities in bulk), between the facilities of Koppers Company, Inc., at or near North Tonawanda, NY; Heath, Wickliffe and Youngstown, OH; Morgan, PA; and Follansbee, WV, on the one

hand, and, on the other, points in IN, KY, MI, NY, OH, PA and WV, for 180 days. Supporting shipper(s): Koppers Company, Inc., 850 Koppers Bldg., Pittsburgh, PA 15219.

MC 147681 (Sub-II-9TA), filed June 16, 1980. Applicant: HOYA EXPRESS, INC., RT. 18, West Middlesex, PA 16159. Representative: Michael P. Pitterich, P.O.B. 543, West Middlesex, PA 16159. *Laboratory materials and supplies* between Columbus, IN and Madison, WI, on the one hand, and, on the other, points in NJ, for 180 days. Supporting shipper(s): Gibco Diagnostics, 2801 Industrial Dr., Madison, WI 53713.

MC 38921 (Sub-II-1TA), filed June 16, 1980. Applicant: K.M.A. LEASING, INC., 1345 N. Mascher St., Philadelphia, PA 19122. Representative: James Rutherford, same as above. *Malt beverages and supplies used in the production of malt beverages, including the return of empty malt beverage containers, (except commodities in bulk,)* between the facilities of C. Schmidt & Sons, Inc., at Cleveland, OH and Philadelphia, PA, on the one hand, and, points in FL and GA, on the other, for 180 days. An underliying ETA seeks 90 days authority. Supporting shipper: C. Schmidt & Sons, Inc., 127 Edward St., Philadelphia, PA 19123.

The following applications were filed in Region 3. Send protests to ICC, Regional Authority Center, P.O. Box 7520, Atlanta, GA 30357.

MC 128720 (Sub-3-5TA), filed June 16, 1980. Applicant: MERCHANTS FREIGHT LINE, INC., 1185 Omohundro Drive, Nashville, TN 37210. Representative: Henry E. Seaton, 929 Pennsylvania Bldg., 425 13th St., N.W., Washington, DC 20004. *Wire racks, display stands, wire shelving and containers and material, supplies, and equipment used in the manufacture, sale and distribution thereof,* between the facilities of Nashville Wire Co. at or near Nashville, TN, on the one hand, and, on the other, points in IL, IA, and MI. Supporting shipper(s): Nashville Wire Corp., P.O. Box 491, Nashville, TN 37202.

MC 128720 (Sub-3-7TA), filed June 16, 1980. Applicant: MERCHANTS FREIGHT LINE, INC., 1185 Omohundro Drive, Nashville, TN 37210. Representative: Henry E. Seaton, 929 Pennsylvania Bldg., 425 13th St., N.W., Washington, DC 20004. *(1) Electric Heating Elements, (2) materials and supplies used in the manufacture, distribution and sale of the commodity (except in bulk, in tank vehicles) named in (1) above,* between the plant facilities of Teledyne-Stillman at or near Cookeville, TN, on the one hand, and, on the other, points in GA, OH, MI, NC, AL, and IL. Supporting shipper(s): Teledyne-Stillman Mfg. Co., 1011 Volunteer Drive, Cookeville, TN 38501.

MC 150965 (Sub-3-1TA), filed June 13, 1980. Applicant: YELLOW CAB COMPANY OF BIRMINGHAM, INC., 1601 Vanderbilt Rd., Birmingham, AL 35234. Representative: E. Ray Large, 1407 City Federal Bldg., Birmingham, AL 35203. *Passengers and their baggage, train crews and baggage, in the same vehicle, in special and charter operations,* between Birmingham, AL and its commercial zone and points located in AL, FL, GA, MS and TN. Supporting shipper(s): Louisville and Nashville Railroad Company, 4100 Vanderbilt Road, Birmingham AL 35217.

MC 151039 (Sub-3-1TA), filed June 12, 1980. Applicant: CABARRUS CONSOLIDATING AND MANAGEMENT COMPANY, Post Office Box 1212, Concord, NC 28205. Representative: John N. Fountain, Attorney at Law, Post Office Box 2246, Raleigh, NC 27602. *Contract carrier:* irregular: *Textiles* between Wilmington, DE, San Antonio, TX, Los Angeles, CA, San Francisco, CA, Lewiston, ME, Pawtucket, RI, Sylacauga, AL, Emporia, VA, Bedford, VA and all points in SC on the other hand, and, Concord, NC, Atlanta, GA, Perry, GA, on the one hand. Supporting shippers: Lanscot Arlen Fabrics, 295 Fifth Avenue, New York, NY; KasTex Corporation, 3411 Exposition Blvd., Los Angeles, CA 90018; Decor Fabrics, 100 West 17th Street, Los Angeles, CA 90015; and Miller Curtain Company, 1734 Centennial Avenue, Post Office Box 3479, San Antonio, TX 78285.

MC 147547 (Sub-3-2TA), filed June 13, 1980. Applicant: R & D TRUCKING CO., INC., Church Road, Lauderdale Industrial Park, Florence, AL 35630. Representative: Roland M. Lowell, 618 United American Bank Building, Nashville, TN 37219. *Precast concrete facing and flooring products* from the facilities of Coronada Products, Inc., at Nashville, TN to points in the U.S. Supporting shipper(s): Coronada Products, Inc., 1325 Sixth Avenue, North, Nashville, TN 37208.

MC 145741 (Sub-3-1TA), filed June 13, 1980. Applicant: WATKINS TRUCKING, INC., Lafayette Street South, P.O. Box 3, Livingston, AL 43570. Representative: Fred W. Johnson, Jr., 236 East Capital St., P.O. Box 22807, Jackson, MS 39205. *Wood chips* from Livingston, AL to Meridian, MS. Supporting shipper: Weyerhaeuser Company, P.O. Box 2288, Columbus, MS, 39701.

MC 126436 (Sub-3-31TA), filed June 12, 1980. Applicant: REFRIGERATED TRANSPORT CO., INC., P.O. Box 308 Forest Park, GA 30050. Representative: Alan E. Serby, Esq., 3390 Peachtree Road, N.E., 5th Floor-Lenox Towers South, Atlanta, GA 30326. *Contract:* irregular. *Fiber glass products and materials, equipment and supplies used in the manufacture and sale of fiber glass products (except in bulk)* from facilities of PPG Industries, Inc. at or near Shelby and Lexington, NC to points in the US (except AK, AR, CT, FL, GA, IL, IN, LA, MA, MD, HI, NJ. NY, OK, PA, TN, TX and WI). Supporting shipper: PPG Industries, Inc., One Gateway Center, Pittsburgh, PA 15222.

MC 115311 (Sub-3-7TA), filed June 12, 1980. Applicant: J & M TRANSPORTATION CO., INC., P.O. Box 488, Milledgeville, GA 31061. Representative: Kim G. Meyer, P.O. Box 872, Atlanta, GA 30301. *Clay pipe,* from the facilities of Dickey Clay Manufacturing Company at or near Bessemer, AL to points in LA, MS, AR, TN, KY, GA, FL, IN and OH. Supporting shipper: Dickey Clay Manfacturing Company, P.O. Box 6, Pittsburg, KS 66762.

MC 126436 (Sub-3-32TA), filed June 12, 1980. Applicant: REFRIGERATED TRANSPORT CO., INC., P.O. Box 308, Forest Park, GA 30050. Representative: Alan E. Serby, Esq., 3390 Peachtree Road, N.E., 5th Floor-Lenox Towers South, Atlanta, GA 30326. *Contract:* irregular. *Fiber Glass Products, and Materials, Equipment and Supplies used in the manufacture and sale of fiber glass products (except in bulk)* from facilities of PPG Industries, Inc. at or near Shelby and Lexington, NC to points in AR, CT, FL, GA, IL, IN, LA, MA, MD, NJ, NY, OK, PA, TN, TX and WI. Supporting shipper: PPG Industries, Inc., One Gateway Center, Pittsburgh, PA 15222.

MC 138777 (Sub-3-1TA), filed June 11, 1980. Applicant: FETZ INCORPORATED, P.O. Box 47685, Doraville, GA. 30362. Representative: Frank D. Hall, Postell & Hall, P.C., Suite 713, 3384 Peachtree Rd., N.E., Atlanta, GA 3026. *Liquid aluminum sulfate, in bulk, in tank vehicles,* from Cobb County, GA, to points in AL. Supporting shipper: C&S Chemicals, Inc., 2845 Railroad Ave., Austell, GA, 30001.

MC 151050 (Sub-3-1TA), filed June 16, 1980. Applicant: RYDER TRUCK LINES, INC., 2050 Kings Road, P.O. Box 2408, Jacksonville, FL 32203. Representative: S. E. Somers, Jr. (same address as applicant). *Contract carrier:* irregular: *Foodstuffs (except in bulk),* from the facilities of General Foods Corporation at Jacksonville, FL to Louisville, KY; Taylor, MI; Chicago, IL and points in its commercial zone; Clifton and

Moonachie, NJ; Dedham, MA; Liverpool, NY and Boardman, OH, under continuing contract with General Foods Corporation, White Plains, NY. Supporting shipper: General Foods Corporation, 250 North Street, White Plains, NY 10625.

MC 151037 (Sub-3-1TA), filed June 16, 1980. Applicant: ROAD RAIL TRANSPORT, LTD., 4250 Perimeter Park South, Suite 201, Atlanta, Ga. 30341. Representative: Wilson A. George, Jr., 4250 Perimeter Park South, Suite 201, Atlanta, Ga. 30341. *General Commodities (except those of unusual value, Classes A and B explosives, commodities in bulk in tank vehicles and those requiring special equipment.* Between Atlanta, GA and its Commercial Zone, on the one hand, and points within the states of AL, AR, GA, MS, NC, SC and TN on the other. Restricted to traffic having a prior or subsequent movement by rail or water. Supporting shipper(s): There are 8 statements in support attached to this application which may be examined at the ICC Regional Office in Atlanta, GA.

MC 109708 (Sub-3-6TA), filed June 16, 1980. Applicant: INDIAN RIVER TRANSPORT COMPANY INC., P.O. Box AG, Dundee, FL 33838. Representative: John J. Harned (same address as above). *Hydrolized Vegetable Protein in bulk tank vehicles,* From Harbor Beach, MI to Winstead, CT. Supporting shipper: Keratene Division Strange Company, 50 Fruit Street, Winstead, Ct. 06098.

MC 146646 (Sub-3-18TA), filed June 16, 1980. Applicant: BRISTOW TRUCKING CO., INC., P.O. Box 6355 A, Birmingham, AL 35217. Representative: James W. Segrest (same address as applicant). *Starch, Black and White Pepper (except in bulk)* from Chicago, IL and Indianapolis, IN to the facilities of the Stange Company located at or near Atlanta, GA. Supporting shipper: Stange Company, 5820 Tulane Drive, Atlanta, GA 30336.

MC 107002 (Sub-3-17TA), filed June 16, 1980. Applicant: MILLER TRANSPORTERS, INC., P.O. Box 1123, Jackson, MS 39205. Representative: Larry M. Ford (same address as applicant). *Arsenic acid,* in bulk, from Bonham, TX to Memphis, TN. Supporting shipper: Commercial Chemical Company, P.O. Box 7275, 1172 No. Thomas St., Memphis, TN 38107.

MC 138308 (Sub-3-9TA), filed June 16, 1980. Applicant: KLM, INC., P.O. Box 6098, Jackson, MS 39208. Representative: Robert L. McArty, 1500 Deposit Guaranty Plaza, P.O. Box 22628, Jackson, MS 39205. *Such commodities as are dealt in or used by retail, wholesale, discount and variety stores* (except commodities in bulk) from North Bergen, NJ and points in its commercial zone to Montgomery, AL; Macon, GA; Shreveport, LA; and Hattiesburg, MS, and points in their commercial zones, restricted to traffic originating at or destined to facilities utilized by T. G. & Y. Stores Company. Supporting shipper: T. G. & Y. Stores Company, 3815 N. Santa Fe, Oklahoma City, OK 73125.

MC 2900 (Sub-3-11TA), filed June 17, 1980. Applicant: RYDER TRUCK LINES, INC., 2050 Kings Road, P.O. Box 2408, Jacksonville, FL 32203. Representative: S. E. Somers, Jr. (same address as applicant). *Common carrier:* regular: *General commodities, (except those of unusual value, Classes A and B explosives, commodities in bulk, those requiring special equipment and household goods as defined by the Commission),* (1) Between Sherman, TX and Opelousas, LA, from Sherman over U.S. Hwy 82 to Jct. U.S. Hwy 71 then over U.S. Hwy 71 to Opelousas and return over the same route, (2) Between Denison, TX and Beaumont, TX over U.S. Hwy 69, (3) Between Dallas, TX and Little Rock, AR over U.S. Hwy 67, (4) Between Dallas, TX and Jct. U.S. 259 and TX Hwy 31, from Dallas over U.S. Hwy 77 (also over U.S. 75) to Jct. TX Hwy 31 then over TX Hwy 31 to Jct. U.S. Hwy 259 and return over the same route, (5) Between Dallas, TX and Jct. U.S. Hwy 167 and AR Hwy 15, from Dallas over U.S. Hwy 175 to Jct. U.S. Hwy 79, then over U.S. Hwy 79 to Jct. LA Hwy Alt. 2, then over LA Hwy Alt. 2 to Jct. LA Hwy 161 then over LA Hwy 161 to Jct. AR Hwy 15 then over AR Hwy 15 to Jct. U.S. Hwy 167 and return over the same route, (6) Between Paris, TX and Greenville, TX over TX Hwy 24, (7) Between Houston, TX and Jct. Winnfield, LA, from Houston over U.S. Hwy 59 to Jct. U.S. Hwy 84 then over U.S. Hwy 84 to Winnfield and return over the same route, (8) Between Dallas, TX and Lake Charles, LA, from Dallas over U.S. Hwy 80 to Jct. U.S. Hwy 171 then over U.S. Hwy 171 to Lake Charles, and return over the same route, (9) Between Naples, TX and Nacogdoches, TX over U.S. Hwy 259, (10) Between Mt. Pleasant, TX and Port Allen, LA, from Mt. Pleasant over TX Hwy 49 to Jct. LA Hwy 2 then over LA Hwy 2 to Jct. LA Hwy 1 then over LA Hwy 1 to Port Allen and return over the same route, (11) Between Texarkana, TX and Little Rock, AR from Texarkana over U.S. Hwy 82 to Jct. U.S. Hwy 79, then over U.S. Hwy 70 to U.S. Hwy 65 then over U.S. Hwy 65 to Little Rock and return over the same route, (12) Between Paris, TX and Tyler, TX over U.S. Hwy 271, (13) Between Alexandria, LA and Leesville, LA over LA Hwy 28, (14) Between Little Rock, AR and Opelousas, LA over U.S. Hwy 167, (15) Between Beaumont, TX and Carthage, TX over U.S. Hwy 96, (16) Between Athens, TX and Jacksonville, TX from Athens over TX Hwy 19 to Jct. U.S. Hwy 79 then over U.S. Hwy 79 to Jacksonville and return over the same route, (17) Between Baton Rouge, LA and Slidell, LA over U.S. Hwy 190 (also from Baton Rouge over U.S. 190 to Jct. LA Hwy 21 then over LA Hwy 21 to Jct. LA Hwy 10 then over LA Hwy 10 to Jct. AL Hwy 26 then over AL Hwy 26 to Jct. U.S. Hwy 11 then over U.S. Hwy 11 to Slidell) and return over the same route, (18) Between Carthage, TX and Texarkana, AR-TX over U.S. Hwy 59, (19) Between Longbridge, LA and Bunkie, LA over LA Hwy 29, serving all intermediate points in Routes (1) through (19) above. There are 42 statements in support to this application which may be examined at the I.C.C. Regional Office in Atlanta, GA.

Note.—Applicant intends to tack, interline and serve commercial zones.

MC 118831 (Sub-3-TA), filed June 17, 1980. Applicant: CENTRAL TRANSPORT, INC. P.O. Box 7007, High Point, N.C. 27264. Representative: Ben H. Keller, III (same address as applicant). *Liquid Chemicals, in bulk, in tank vehicles,* from Greensboro, NC to WV and from FL, GA, IL, KY, LA, MI, MO, NJ, OH, PA, TN, TX and WV to Greensboro, NC. Supporting shipper: Brin-Mont Chemicals, P.O. Box 7322, Greensboro, NC.

MC 115841 (Sub-3-12TA), filed June 18, 1980. Applicant: COLONIAL REFRIGERATED TRANSPORTATION, INC., McBride Lane, P.O. Box 22168, Knoxville, TN 37922. Representative: Michelene Good (same address as applicant). *Foodstuffs (Except commodities in bulk),* from Allen Township, Hillsdale County, MI, to points in OK, TX, KS, and MO Supporting shipper: Peter Eckrich & Sons, Inc., P.O. Box 388, Ft. Wayne, IN 46801.

MC 121654 (Sub-3-3TA), filed June 18, 1980. Applicant: COASTAL TRANSPORT & TRADING CO., P.O. Box 7438, Savannah, GA 31408. Representative: Alan E. Serby; Richard M. Tettelbaum, 3390 Peachtree Road, NE., 5th Floor-Lenox Towers South, Atlanta, GA 30326. *Air Pollution Equipment (except that which because of size or weight requires the use of special equipment)* from Jacksonville, FL to Bakersfield, CA. Supporting shipper: Andersen 2000, 2000 Sullivan Road, College Park, GA 30337.

MC 119777 (Sub-3-9TA), filed June 18, 1980. Applicant: LIGON SPECIALIZED

HAULER, INC., Highway 85—East, Madisonville, KY 42431. Representative: Carl U. Hurst, P.O. Drawer "L" Madisonville, KY 42431. *Steel pipe,* from the facilities of Stupp Corporation at or near Baton Rouge, LA to points in TX, OK, AR, MS, AL, GA, TN and FL. Supporting shipper: Stupp Corporation, P.O. Box 3558, Baton Rouge, LA 70821.

MC 146451 (Sub-3-14TA), filed June 17, 1980. Applicant: WHATLEY-WHITE, INC., 230 Ross Clark Circle, NE., Dothan, AL 36302. Representative: R. S. Richard, P.O. Box 2069, Montgomery, AL 36197. *Foodstuffs,* between the facilities of Fearn International Inc., at or near Franklin Park, IL, on the one hand, and on the other hand, points in LA, MS, TN, NC, SC, AL, GA and FL. Supporting shipper: Fearn International Inc., 9353 Belmont, Franklin Park, IL 60131.

MC 19105 (Sub-3-3TA), filed June 19, 1980. Applicant: FORBES TRANSFER COMPANY, INC., P.O. Box 3544, Wilson, NC 27893. Representative: Vance T. Forbes, Jr., P.O. Box 3544, Wilson, NC 27893. *Building materials and supplies, except commodities in bulk,* from the facilities of Intercontinental Building Products at or near Raleigh, NC to points in VA and TN. Supporting shipper: Intercontinental Building Products, 5312 Fayetteville Road, Raleigh, NC 27603.

MC 115654 (Sub-3-12TA), filed June 19, 1980. Applicant: TENNESSEE CARTAGE CO., INC., P.O. Box 23193, Nashville, TN 37202. Representative: Jackie Hastings (same as above). *Wearing apparel,* from the facilities of K Mart Apparel in Nashville, TN to the K Mart stores in W. Memphis, AR; Southaven, MS; Muscle Shoals, Florence, and Huntsville, AL; and all points in TN. Supporting shipper: K Mart Apparel Corp., 7373 West Side Avenue, North Bergen, NJ 07047.

MC 115654 (Sub-3-13TA), filed June 19, 1980. Applicant: TENNESSEE CARTAGE CO., INC., P.O. Box 23193, Nashville, TN 37202. Representative: Jackie Hastings (same as above). *Wearing apparel,* from Forest Park, GA to Nashville, TN. Supporting shipper: K Mart Apparel Corp., 7373 West Side Ave., North Bergen, NJ 07047.

MC 149140 (Sub-3-3TA), filed June 19, 1980. Applicant: OVER LAND, INC., 4121 Augusta Road, Garden City, GA 31408. Representative: Miss Wilhelmina Boersma, 1600 First Federal Bldg., Detroit, MI 48226. *Building or roofing tiles and slabs* from Brunswick, GA to points in FL, AL, NC, and SC. Supporting shipper: Concrete Products, Inc., P.O. Box 130, Brunswick, GA 31520.

MC 85970 (Sub-3-6TA), filed June 17, 1980. Applicant: SARTAIN TRUCK LINE, INC., 1625 Hornbrook St., Dyersburg, TN 38024. Representative: Warren A. Goff, 2008 Clark Tower, 5100 Poplar Avenue, Memphis, TN 38137. (1) *Plastic articles, other than expanded and* (2) *materials, equipment and supplies used in the manufacture thereof* between the facilities of Bryan Custom Plastics, Division of United Bolt and Screw Company, located at or near Kenton, TN and Bryna, OH, on the one hand, and, on the other, points in the U.S. (except AK and HI). Supporting shipper: Bryan Custom Plastics, Div. of United Bolt and Screw Co., Bryan, OH.

MC 144827 (Sub-3-6TA), filed June 19, 1980. Applicant: DELTA MOTOR FREIGHT, INC., P.O. Box 18423, Memphis, TN 38103. Representative: R. Connor Wiggins, Jr., Suite 909, 100 N. Main Bldg., Memphis, TN 38103. *Microwave oven liners and cabinets* from the facilities of Watertown Metal Products, Inc. at Watertown, WI to facilities of Sharp Manufacturing Co. of America at Memphis, TN. Supporting shipper: Watertown Metal Products, Inc., Watertown, WI 53094.

MC 144827 (Sub-3-7TA), filed June 19, 1980. Applicant: DELTA MOTOR FREIGHT, INC., 2877 Farrisview, Memphis, TN 38118. Representative: R. Connor Wiggins, Jr., Suite 909, 100 N. Main Bldg., Memphis, TN 38103. *General commodites with the usual exceptions* from facilities of Acme Fast Freight, Inc., at Norfolk, VA to facilities of Acme Fast Freight, Inc. at Memphis, TN to facilities of Acme Fast Freight, Inc. at points in CA. Supporting shipper: Acme Fast Freight, Inc., Memphis, TN 38106.

MC 136315 (Sub-3-1TA), filed February 15, 1980. Republication—Originally Published in **Federal Register** of 03-12-80, Page 16046, Volume 45, No. 50. Applicant: OLEN BURRAGE TRUCKING, INC., Route 9, Box 28, Philadelphia, MS 39350. Representative: Fred W. Johnson, Jr., P.O. Box 22807, Jackson, MS 39205. *Iron and steel articles and building materials (except in bulk)* beween points in AL, AR, FL, GA, IA, IL, IN, KS, KY, LA, MI, MN, MO, NC, OH, OK, PA, SC, TN, TX, and WI. Restriction: restricted to traffic originating at or destined to the facilities of or utilized by North Pacific Lumber Company, Inc. and its wholly-owned subsidiaries; Allen Timber Company, Big Bay Timber, Ltd., Cascade Imperial Mills, Ltd., Longleaf Forest Products, Inc., North Pacific International, Inc. and Zenith Lumber Company. Supporting shipper: North Pacific Lumber Company, P.O. Box 3915, Portland, OR 97208.

THE FOLLOWING APPLICATIONS WERE FILED IN REGION 4. SEND PROTESTS TO: ICC, DIRKSEN BLDG., 219 S. DEARBORN ST., ROOM 1386, CHICAGO, IL 60604.

MC 123407 (Sub-4-37TA), filed June 18, 1980. Applicant: SAWYER TRANSPORT, INC., Sawyer Center, Route 1, Chesterton, IN 46304. Representative: H. E. Miller, Jr. (same address as applicant). *Rubber scrap in bags, and materials and supplies* between South Bend, IN, on the one hand, and, on the other, points in the U.S. Supporting shipper: Baker Rubber, Inc., 700 W. Chippewa, P.O. Box 2551, South Bend, IN 46680. An underlying ETA seeks 90 days authority.

MC 142747 (Sub-4-2TA), filed June 18, 1980. Applicant: TATECO, One Cheddar Ln., Valley City, IL 62340. Representative: Tom B. Kretsinger, 20 East Franklin, Liberty, MO 64068. *Contract;* irregular; *Foodstuffs,* (except in bulk) from the facilities of Citrus Central, Inc. located in Umatilla, Howey-in-the-Hills, Plymouth, Lakeland, Winter Haven, Haines City, Eloise, and Bartow, FL to points in AL, AR, CT, DE, GA, IL, IN, IA, KS, KY, LA, MD, MA, ME, MI, MN, MO, MS, NH, NJ, NY, NC, OH, OK, PA, RI, SC, TN, TX, VA, VT, WV & WI. Supporting shipper: Citrus Central, Inc., P.O. Box 17774, Orlando, FL 32860.

MC 120737 (Sub-4-7TA), filed June 18, 1980. Applicant: STAR DELIVERY & TRANSFER, INC., P.O. Box 39, Canton, IL 61520. Representative: James C. Hardman, 33 N. LaSalle St., Chicago, IL 60602. *Iron and steel articles,* from the facilities of Keystone Consolidated Industries, Inc. at or near Sherman, TX to points in AR, TN, LA, IL, IN, AL, NC, GA, FL and MS. Supporting shipper: Keystone Consolidated Industries, 7000 W. Adams St., Peoria, IL 61641.

MC 144822 (Sub-4-1TA), filed, June 18, 1980. Applicant: WINTZ MOTOR FREIGHT, INC., P.O. Box 43098, 656 Pelham Blvd., St. Paul, MN 55164. Representative: Michael J. Ogborn, P.O. Box 82028, Lincoln, NE 68501. *Common,* regular. *General commodities (except articles of unusual value, Classes A and B explosives, household goods as defined by the Commission, commodities in bulk, and those requiring special equipment),* (1) Between St. Paul, MN and Preston, MN, from St. Paul over Interstate Hwy 35 to junction with Interstate Hwy 90, then over Interstate Hwy 90 to junction with US Hwy 16, then over US Hwy 16 to Preston and return over the same route; (2) Between St. Paul, MN and Spring Valley, MN, from St. Paul over US Hwy 61 to junction with MN Hwy 44, then

over MN Hwy 44 to junction with US Hwy 52, then over US Hwy 52 to junction with US Hwy 16, then over US Hwy 16 to Spring Valley and return over the same route, from St. Paul over US Hwy 52 to junction with US Hwy 63, then over US Hwy 63 to junction with US Hwy 16, then over US Hwy 16 to Spring Valley and return over the same route, serving all intermediate points in (1) and (2) above, and the off-route points of Adams, Rose Creek, Taopi, and LeRoy, MN and LaCrosse, WI and points in MN on and east of Interstate Hwy 35 and on and south of Interstate Hwy 94 as off-route points in connection with the regular routes in (1) and (2) above; (3) Between junction of Interstate Hwy 35 and Interstate Hwy 90 and junction of Interstate Hwy 235 and US Hwy 6, from the junction of Interstate Hwy 35 and Interstate Hwy 90 over Interstate Hwy 35 to junction of Interstate Hwy 35 and Interstate Hwy 235 then over Interstate Hwy 235 to junction with US Hwy 6 and return over the same route, serving no intermediate points but serving junction of Interstate Hwy 35 and US Hwy 30 for purposes of joinder only; (4) Between Spring Valley, MN and junction of Interstate Hwy 35 and Interstate Hwy 80, from Spring Valley over US Hwy 63 to junction with Interstate Hwy 80, then over Interstate Hwy 80 to junction with Interstate Hwy 35 and return over the same route, serving no imtermediate points, but serving the junction of US Hwy 218 and US Hwy 20 for purposes of joinder only; (5) Between Spring Valley, MN and junction US Hwy 218 and US 30, from Spring Valley over US Hwy 63 to junction US Hwy 218 and US Hwy 63 and then over US Hwy 218 to junction US Hwy 218 and US Hwy 30 and return over the same route serving no intermediate points and serving the junction of US Hwy 218 and US Hwy 30 for purposes of joinder only; (6) Between junction of Interstate Hwy 35 and US Hwy 30 and junction US Hwy 30 and US Hwy 59, from junction of Interstate Hwy 35 and US Hwy 30 over US Hwy 30 to junction US Hwy 59 and return over the same route serving the junctions of US Hwy 30 and Interstate Hwy 35 and the junctions of US Hwy 30 and US Hwy 59 for purposes of joinder only; (7) Between Preston, MN and Prairie du Chien, WI, from Preston over US Hwy 16 to junction with US Hwy 52, then over US Hwy 52 to junction with US Hwy 18, then over US Hwy 18 to Prairie du Chien and return over the same route serving all intermediate points and points in IA on and east of US Hwy 52, and on and north of US Hwy 18, as off-route points in connection with the regular route described herein, for 180 days.

Note.—Applicant intends to serve commercial zones of named cities and cities at named service juncture points and their commercial zones and intends to tack sought authority with other authority presently held and to interline. There are 125 supporting shippers.

MC 128837 (Sub-4-8TA), filed June 18, 1980. Applicant: TRUCKING SERVICE, INC., P.O. Box 229, Carlinville, IL 62626. Representative: Michael W. O'Hara, 300 Reisch Bldg., Springfield, IL 62701. *Packaged food products and materials and supplies used in the manufacture of food products,* between the facilities of Gilster Mary Lee Corporation at Steeleville and Chester, IL and Perryville, MO on the one hand, and on the other, points in the U.S. (except AK and HI). Supporting shipper: Gilster Mary Lee Corporation, 1037 State St. Chester, IL 62233.

MC 151051 (Sub-4-1TA), filed June 18, 1980. Applicant: HARLEY E. HOMANN d.b.a., HOMANN TRANSPORT, Route #1, Jim Falls, WI 54748. Representative: Michael J. Wyngaard, 150 E. Gilman St., Madison, WI 53703. *Food grade liquid aqua ammonia neutralizer and calcium chloride, in bulk, in tank vehicles,* from the facilities of Dairyland Food Laborataories, Inc., at Waukesha, WI to points in MN. An underlying ETA seeks 90 day authority. Supporting shipper: Dairyland Food Laboratories, P.O. Box 406, Waukesha, WI 53187.

MC 150157 (Sub-4-3TA), filed June 18, 1980. Applicant: REGENCY MOTOR FREIGHT, INC., 26600 Van Born Rd., Dearborn Heights, MI 48125. Representative: Edwin M. Snyder, 22375 Haggerty Rd., P.O. Box 400, Northville, MI 48167. *Petroleum and petroleumm products, automotive chemicals, and cleaning compounds, and such equipment, materials and supplies as are used by automotive service centers (except in bulk),* between the facilities of Valvoline Oil Company, a division of Ashland Oil, Inc. located at Willow Springs, IL on the one hand, and, on the other, points in AR, CO, IL, IN, IA, KY, KS, LA, MI, MN, MO, MT, NE, NM, ND, OH, OK, PA, SD, TN, TX, WI, and WY. Supporting shipper: Valvoline Oil Co., Division of Ashland Oil, Inc., P.O. Box 391, Ashland, KY 41101.

MC 103993 (Sub-4-15TA), filed June 18, 1980. Applicant: MORGAN DRIVE-AWAY, INC., 28651 U.S. 20 West, Elkhart, IN 46515. Representative: James B. Buda (same address as applicant). *Building materials,* from (1) Port Allegany, PA and (2) Sedalia, MO, to points in the U.S. (except AK and HI). Supporting shipper: Pittsburgh-Corning, Div. PPG Ind., Pittsburgh, PA 15239.

MC 144483 (Sub-4-2TA), filed June 17, 1980. Applicant: MAHER, INC., R.R. #14, Box 330, West Terre Haute, IN 47885. Representative: Norman R. Garvin, 1301 Merchants Plaza, East Tower, Indianapolis, IN 46204. *Contract;* irregular; *Liquefied petroleum gas,* from Tuscola, IL, to Waynetown, IN under continuing contract(s) with Pyrofax Gas Corp., P.O. Box 2521, Houston, TX 77001.

MC 150579 (Sub-4-TA), filed June 17, 1980. Applicant: WASCHER'S TRUCKING, INC., 201 Elm St., Box 88, Greenland, MI 49929. Representative: Agnes J. Hautamaki (same address as applicant). *Lumber (rough, planed, green, dry and kiln-dried).* To-from-and between points in MI, WI and MN. Supporting shipper(s): Northern Hardwoods Division-Copper Range 300 W. Memorial, Houghton, MI 49931, and Marquette Timber Co., P.O. Box 369, Marquette, MI 49855.

MC 112049 (Sub-4-2TA), filed June 16, 1980. Applicant: McBRIDE'S EXPRESS, INC., East Route 316, Mattoon, IL 61938. Representative: Michael R. Solomon, 433 Thatcher Ave., St. Louis, MO 63147. *Common;* regular, *General commodities, with the usual exceptions,* between (1) Springfield, IL, on the one hand, and, on the other, Bloomington and Peoria, IL, as follows: (a) From Springfield, IL over Interstate Hwy 55 to the junction of U.S. Hwy 150 at Bloomington, IL, then over U.S. Hwy 150 to Peoria, IL, then over IL Hwy 29 to Springfield, IL, serving all intermediate points, and Meredosia and points in Woodford, Tazewell, McLean and Livingston Counties, IL as off-route points in connection with the foregoing routes, and (2) between Decatur, IL, on the one hand, and, on the other, Danville, IL as follows: (a) From Decatur, IL over Interstate Hwy 72 to the junction of U.S. Hwy 150, then over U.S. Hwy 150 to Danville, IL and return over the same route, serving all intermediate points and points in Champaign and Vermillion Counties, IL as off-route points in connection with the foregoing route. An underlying ETA seeks 90 days. There are 24 supporting shippers.

Note.—Applicant intends to tack and interline.

MC 133689 (Sub-4-21TA), filed June 16, 1980. Applicant: OVERLAND EXPRESS, INC., 8651 Naples St. NE., Blaine, MN 55434. Representative: Robert P. Sack P.O. Box 6010, West St. Paul, MN 55118. *Plastic articles (except in bulk),* from Milwaukee, WI to points in and east of ND, SD, NE, KS, OK, and TX. An underlying ETA seeks 90 days authority. Supporting shipper: Pereles

Brothers, Division of Beatrice Foods Co., 5840 N. 60th St, Milwaukee, WI 53218.

MC 118989 (Sub-4-2TA), filed June 16, 1980. Applicant: CONTAINER TRANSIT, INC., 5223 S. 9th St., Milwaukee, WI 53221. Representative: Rolland K. Draves (same address as applicant). *Can-Pak sterilized whole milk, in hermetically sealed cans,* between all states in and east of NE, ND, OK, SD, TX, and KS. An underlying ETA seeks 90 days authority. Supporting shipper, Kansas Food-Packers, Inc., 608 Burton Ave., Wichita, KS 67213.

MC 128543 (Sub-4-4TA), filed June 16, 1980. Applicant: CRESCO LINES, INC., 13900 S. Keeler Av., Crestwood, IL 60445. Representative: Edward G. Bazelon, 39 S. LaSalle St., Chicago, IL 60603. *Contract;* Irregular; *Pipe, tubing and accessories therefor,* (a) from St. Louis, MO, and Staunton, IL, to IL, IN, OH, and MI; (b) from points in OH and IL to points in IL and MO; and (c) from Minneapolis, MN, to St. Louis, MO, and Staunton, IL, restricted to traffic moving to or from the facilities of Tubular Steel, Inc., at Hazelwood, Mo, and Staunton, IL, and under a continuing contract or contracts with Tubular Steel, Inc., of Hazelwood, MO. An underlying ETA seeks 90-day authority. Supporting shipper: Tubular Steel, Inc., 7220 Polson Lane, P.O. Box 65, Hazelwood, MO 63042. Hazelwood, MO, is a point in the St. Louis commercial zone.

MC 146643 (Sub-4-22TA), filed June 13, 1980. Applicant: INTER-FREIGHT TRANSPORTATION, INC., 655 East 114th St., Chicago, IL 60628. Representative: Marc J. Blumenthal 39 S. LaSalle St., Chicago, IL 60603. *Contract;* irregular; *Foodstuffs (except in bulk),* from the facilities of Fearn International, Inc. at Franklin Park, IL, to points in IN, IA, KS, MI, MN, MO, OH, PA, and WI under continuing contracts with Fearn International, Inc. Supporting shipper: Fearn International, Inc., 9353 Belmont Ave., Franklin Park, IL 60131.

MC 140779 (Sub-4-2TA), filed June 16, 1980. Applicant: TRANSIT SERVICING, INC., 8121-C E. 34 Rd., Cadillac, MI 49601. Representative: Burton A Hines, 121 N. Mitchell St. Cadillac, MI 49601. *Contract;* Irregular; *General commodities (except those of unusual value, Classes A & B explosives, household goods as defined by the Commission, commodities in bulk and those requiring special equipment)* from, to or between the warehouse of Transit Servicing, Inc. at Cadillac, MI, on the one hand, and, on the other, points in Melvindale, MI; Ft. Wayne, IN; Huntington, IN; Chicago, IL; restricted to traffic having a prior or subsequent interstate movement and destined to or originating at K Mart stores. An underlying ETA seeks 90-day authority. Supporting shipper: K MART Corp., International Headquarters, 3100 W. Big Beaver Rd., Troy, MI 48084.

MC 125777 (Sub-4-2TA), filed June 18, 1980. Applicant: JACK GRAY TRANSPORT, INC., 4600 E. 15th Ave., Gary, IN 46403. Representative: Joel H. Steiner, 39 S. LaSalle St., Chicago, IL 60603. *Silicon carbide and silicon carbide briquettes,* from Milwaukee, WI to points in AL, AR, IL, IN, IA, MI, MN, NJ, NY, OH, PA and TX. An underlying ETA seeks 90 days authority. Supporting shipper: Miller & Company, 55 E. Monroe St., Chicago, IL 60603.

MC 118838 (Sub-4-2TA), filed June 13, 1980. Applicant: GABOR TRUCKING, INC., R.R. 4, Detroit Lakes, MN 56501. Representative: William L. Fairbank, 1980 Financial Center, Des Moines, IA 50309. *Railway car parts,* from Melrose Park and Cicero, IL, to points in CA, KS, MT, NE, and SD and Portland, OR and Renton, WA. Supporting shipper: National Castings Division, Midland-Ross Corporation, 700 S. Dock St., Sharon, PA 16146.

MC 118838 (Sub-4-1TA), filed June 13, 1980. Applicant: GABOR TRUCKING, INC., R.R. 4, Detroit Lakes, MN 56501. Representative: William L. Fairbank, 1980 Financial Center, Des Moines, IA 50309. *Railway car parts,* from Toledo, OH, to points in CA, KS, MT, NE and SD and Portland, OR and Renton, WA. Supporting shipper: National Castings Division, Midland-Ross Corporation, 700 S. Dock St., Sharon, PA 16146.

MC 124078 (Sub-4-24TA), filed June 13, 1980. Applicant: SCHWERMAN TRUCKING CO., 611 S. 28th St., Milwaukee, WI 53215. Representative: Richard H. Prevette, P.O. Box 1601, Milwaukee, WI 53201. *Cement,* from Bonner Springs, KS to Merom, IN. Supporting shipper: Lone Start Industries, Inc., 1968 Johnson Drive, Shawnee Mission, KS 66205.

MC 29886 (Sub-4-4TA), filed June 16, 1980. Applicant: DALLAS & MAVIS FORWARDING CO., INC. 4314 39th Ave., Kenosha, WI 53142. Representative: Fred C. Milloy (same address as applicant). *Motor vehicle chasis, in initial movements, in truckaway service, motor vehicle bodies, parts and accessories for motor vehicles, including cabs, hoods and sleeper boxes,* from the facilities of Freightliner Corporation at Chino, CA, Indianapolis, IN, and Portland, OR, to all points in the U.S. Supporting shipper: Freightliner Corp., 4747 N. Channel Avenue, Portland, OR 97208.

MC 110988 (Sub-4-40TA), filed June 13, 1980. Applicant: SCHNEIDER TANK LINES, INC., 4321 W. College Ave., Appleton, WI 54911. Representative: Patrick M. Byrne, P.O. Box 2298, Green Bay, WI 54306. *Chemicals, in bulk,* from the facilities of Reichhold Chemicals, Inc. at Sewickley, PA, Andover, MA, Cheswold, DE, and Elizabeth and Carteret, NJ to points in OH, IN, MI, WV, IL, WI, KY, MO, IA, KS, and MN. Supporting shipper: Reichhold Chemicals, Inc., 525 North Broadway, White Plains, NY 10603.

MC 147488 (Sub-4-3TA), filed June 12, 1980. Applicant: BURT CLIFFORD TRANSPORT, INC., Box 400, Ruthven, Ontario, Canada N0P 2G0. Representative: Wilhelmina Boersma, 1600 First Federal Bldg., Detroit, MI 48226. *Glassware and glass tableware* from ports of entry on the U.S.-Canada International Boundary line in MI on the Detroit and St. Clair Rivers to the facilities of Diamond Glass Company at Royersford, PA, restricted to the transportation of shipments picked up at the facilities of Libbey-St. Clair Inc. at Wallaceburg, Ontario. Supporting shipper: Libbey-St. Clair, Inc., 1250 James St., Wallaceburg, Ontario, Canada N8A 4L8.

MC 151026 (Sub-4-1TA), filed June 12, 1980. Applicant: LEONARD THOMAS MILLER, d.b.a. MILLCO, Route 7, Box 49, Mankato, MN 56001. Representative: Samuel Rubenstein, P.O. Box 5, Minneapolis, MN 55440. *Such commodities as are dealt in or used by hardware stores,* between Rosemont, IL, and Mankato, MN. Supporting shipper: Cotter & Company, 2415 Third Avenue, Mankato, MN.

MC 143708 (Sub-4-1TA), filed June 13, 1980. Applicant: DUNES TRANSPORT, INC., 3965 N. Meridian St., Indianapolis, IN 46208. Representative: Warren C. Moberly, 320 N. Meridian St., 777 Chamber of Commerce Bldg., Indianapolis, IN 46204. *Cornstarch,* from Lake Station, IN (Lake County) to points in the lower Peninsula of MI. Supporting shipper: A. E. Staley Manufacturing Co., 2200 E. Eldorado Street; Decatur, IL 62525.

MC 147678 (Sub-4-1TA), filed June 13, 1980. Applicant: NELSON TRUCKING OF BOYCEVILLE, INC., Route 1, Downing, WI 54734. Representative: Wayne W. Wilson, 150 E Gilman St., Madison, WI 53703. *Common;* Regular; (1) *Insulation and grass seed,* from Glenwood City, WI to points in MN and NE; and (2) *Materials and supplies used in the manufacture and distribution of insulation and grass seed* from Phoenix, AZ; Atlanta, GA; and points in IL, IA, MN, and NE to Glenwood City, WI. An

underlying ETA seeks 90 days authority. Supporting shipper: Glenwood City Cellulose, Inc., Box 96, Glenwood City, WI 54013.

MC 108835 (Sub-4-1TA), filed June 17, 1980. Applicant: HYMAN FREIGHTWAYS, INC., 1745 University Ave., St. Paul, MN 55104. Representative: Robert S. Lee, 1000 First Natl. Bk. Bldg., Minneapolis, MN 55402. *General commodities (except those of unusual value, household goods, classes A & B explosives and commodities in bulk and those requiring special equipment)* over irregular and regular routes: *Irregular routes;* (1) Between the commercial zones of Minneapolis-St. Paul, MN, Chicago, IL and Davenport, Bettendorf, IA, Moline, Rock Island, IL, on the one hand, and on the other points in Burnett, Washburn, Sawyer, Polk, Barron, Rusk, St. Croix, Dunn, Chippewa, Taylor, Pierce, Pepin, Eau Claire, Clark, Buffalo, Trempealeau, Jackson, LaCrosse and Monroe Counties, WI; (2) Between points in Burnett, Washburn, Sawyer, Polk, Barron, Rusk, St. Croix, Dunn, Chippewa, Taylor, Pierce, Pepin, Eau Claire, Clark, Buffalo, Trempealeau, Jackson, LaCrosse and Monroe Counties, WI; and Regular routes; (3) Between Chicago, IL and Dayton, OH serving all intermediate points, and the off route points of Peru and Marion, from Chicago, IL over I-Hwy 94 to its junction with U.S. Hwy 30, thence over U.S. Hwy 30 to its junction with U.S. Hwy 35, thence over U.S. Hwy 35 to its junction with U.S. Hwy 34, thence over I-Hwy 38 to its junction with I-Hwy 75 to Dayton, OH and return over the same route; (4) Between Chicago, IL and Cincinnati, OH, serving all intermediate points and the off route points of Connersville, Brooksville and Lawrenceburg, IN; From Chicago, IL over I-Hwy 94 to its junction with I-Hwy 80/90, thence over I-Hwy 80/90 to its junction with I-Hwy 65 thence over I-Hwy 65 to its Junction with I-Hwy 74, thence over I-Hwy 74 to Cincinnati, OH and return over the same route; (5) Between Rock Island, IL and Indianapolis, IN, serving all intermediate points; from Rock Island, IL over I-Hwy 74 to Indianapolis, IN and return over the same route; (6) Between Rock Island, IL and Kokomo, IN, serving all intermediate points; from Rock Island, IL over I-Hwy 74 to its junction with U.S. Hwy 24 thence over U.S. Hwy 24 to its junction with U.S. Hwy 35 thence over U.S. Hwy 35 to Kokomo, IN and return over the same route; (7) Between Cincinnati, OH and Dayton, OH, serving all intermediate points and the off route points of Oxford, Hamilton, and Xenia, OH; from Cincinnati, OH over Hwy 75 to Dayton, OH and return over the same route; (8) Between Indianapolis, IN and New Castle, IN serving all intermediate points; from Indianapolis, IN over I-Hwy 70 to its junction with IN Hwy 3 thence over IN Hwy 3 to New Castle and return over the same route; and (9) Between Indianapolis, IN and Fort Wayne, IN serving all intermediate points; from Indianapolis, IN over I-Hwy 69 to its junction with IN Hwy 67, thence over IN Hwy 67 to its junction with IN Hwy 3, thence over IN Hwy 3 to its junction with IN Hwy 218, thence over IN Hwy 218 to its junction with I Hwy 69, thence over I-Hwy 69 to Fort Wayne, IN and return over the same route. There are 99 supporting shippers.

MC 2484 (Sub-4-3TA), filed June 16, 1980. Applicant: E & L TRANSPORT COMPANY, 23420 Ford Rd. Dearborn Heights, MI 48127. Representative: Eugene C. Ewald, 100 West Long Lake Road—Suite 102, Bloomfield Hills, MI 48013. *Motor vehicles, except trailers, in secondary movements, in truckaway and driveaway service,* from points in Jefferson County, KY to points in the U.S. (except AK and HI), Restricted to traffic originating at the facilities of the Ford Motor Co. Supporting shipper: Ford Motor Company, P.O. Box 1529B., NAAO Bldg, Dearborn, MI 48121.

MC 126555 (Sub-4-16TA), filed June 16, 1980. Applicant: UNIVERSAL TRANSPORT, INC., P.O. Box 3000, Rapid City, SD 57709. Representative: Stockton and Lewis, 1650 Grant St. Bldg. Denver, CO 80203. *Dry sand,* from points in El Paso County to points in AR, AZ, ID, IA, KS, LA, MN, MO, MT, NV, NE, NM, ND, OK, OR, SD, TX, UT, WA, WY, and CA. Supporting shipper: Colorado Silica Sand, 3250 Drennen Rd, Colorado Springs, CO 80935.

MC 135395 (Sub-4-1TA), filed June 16, 1980. Applicant: WAREHOUSE & TERMINAL CARTAGE CO., P.O. Box 1874, Bridgeview, IL 60454. Representative: James C. Hardman, 33 N. LaSalle St., Chicago, IL 60602. *Contract; Irregular; Such commodities as are dealt in by manufacturers and distributors of paper and paper products (except commodities in bulk),* between Munster, IN on the one hand, and, on the other, points in IL, restricted to service under continuing contract(s) with Scott Paper Company. Supporting shipper: Scott Paper Company, Scott Plaza, Philadelphia, PA 19113.

MC 151043 (Sub-4-1TA), filed June 16, 1980. Applicant: JACOBI SODDING SERVICE, INC., R.R. 2, Box 232C, Floyds Knobs, IN 47119. Representative: Robert W. Loser, 1101 Chamber of Commerce Bldg., Indianapolis, IN 46204. *Lumber and waste products of lumber, including but not limited to saw dust, chips and other by-products thereof, etc.,* between points and places in IN, KY and OH. Underlying ETA seeks 90 days authority. Supporting shippers: Norstam Veneers, P.O. Box 32, Mauckport, IN 47142; Millett Hardwoods, Inc., 141 No. Sherrin Ave., Louisville, KY 40206; C. H. Best & Sons, Inc., R.R. #1, Floyds Knobs, IN 47119.

MC 99123 (Sub-4-3TA), filed June 17, 1980. Applicant: QUAST TRANSFER, INC., P.O. Box 7, Winsted, MN 55395. Representative: James E. Ballenthin, 630 Osborn Bldg., St. Paul, MN 55102. *Common;* Regular; *General commodities, except those of unusual value, Classes A and B explosives, household goods as defined by the Commission, commodities in bulk and those requiring special equipment,* (1) Between Howard Lake and Minneapolis-St. Paul, MN, serving no intermediate points: from Howard Lake over U.S. Hwy 12 to Minneapolis and St. Paul, and return over the same route. (2) Between Cokato and Minneapolis-St. Paul, MN, serving intermediate and off-route points of Howard Lake, Winsted and Lester Prairie: from Cokato over U.S. Hwy 12 to Howard Lake, then over Wright County Road 2 to MN Hwy 261 to Winsted, then over MN Hwy 261 to junction with U.S. Hwy 7, then over U.S. Hwy 7 to Minneapolis and St. Paul, and return over the same route. And underlying ETA seeks 90 days authority. Supporting Shippers: Dura Supreme, Inc., Howard Lake, MN; Sonstegard Foods, Inc., Howard Lake, MN; Maple Plain Co.-Astro Mailers, Howard Lake, MN.

MC 143853 (Sub-4-4TA), filed June 17, 1980. Applicant: S.M.E. EXPRESS, INC., 101 E. Washington St., Upland, IN 46989. Representative: Alki E. Scopelitis, 13091 Merchants Plaza, Indianapolis, IN 46204. *Contract:* Irregular, *Such commodities as are dealt in or used by cosmetics manufacturers (except commodities in bulk),* form the facilities of Avon Products, Inc., at Newark, DE, to Cumberland and Hagerstown, MD, under continuing contract(s) with Avon Products, Inc. An underlying ETA seeks 90 days authority. Supporting shipper: Avon Products, Inc., 2100 Ogletown Rd., Newark, DE 09711.

MC 151049 (Sub-4-1TA), filed June 16, 1980. Applicant: ED WIERSMA TRUCKING, 239 Holborn Drive, Kitchener, Ontario N2A 2W4. Representative: Edwin M. Snyder, 22375 Haggerty Rd., P.O. Box 400, Northville, MI 48167. *Lumber and lumber products,* from the Ports of Entry on the

International Boundary Line Between Canada and the U.S. within the State of MI to points in IN, OH, MI, and IL, under continuing Contract(s) with Marks Lumber Limited. Supporting shipper: Marks Lumber Limited, P.O. Box 1341, Old Onondaga Rd. Grantford, Ontario N3T 5T6.

MC 146643 (Sub-4-21TA), filed June 16, 1980. Applicant: INTER-FREIGHT TRANSPORTATION, INC., 655 East 114th St., Chicago, IL 60628. Representative: Donald B. Levine, 39 S. LaSalle St., Chicago, IL 60603. *Contract;* irregular; *Paper and paper products, and materials and supplies used in the manufacture and distribution of paper and paper products (except commodities in bulk),* between the facility of International Paper Company at or near Indianapolis, IN, on the one hand, and, on the other, points in IL, KS, MI, MN, MO, NY, OH, OK, and PA. Supporting shipper: International Paper Company, 220 E. 42nd St., New York, NY 10017.

MC 147259 (Sub-4-5TA), filed June 6, 1980. Applicant: CHURCHILL TRANSPORTATION, INC., 5000 Wyoming, Dearborn, MI 48126. Representative: Gerald E. Churchill (same address as applicant). *(1) Printed matter and related articles, and (2) Materials, equipment, and supplies, used in the manufacture of printed matter and related articles,* between points in the commerical zone of Caro, MI on the one hand, and on the other, points in the commercial zones of Chicago, IL; Cleveland, OH; and Atlanta, GA. Supporting shipper: Midwest Rotary Mfg. Co., 1065 E Caro Rd., Caro, MI.

MC 128409 (Sub-4-2TA), filed June 4, 1980. Applicant: HAROLD A. MILLER, P. O. Box 623, Moorhead, MN 56560. Representative: Richard P. Anderson, 502 First National Bank Bldg., Fargo, ND 58126. *Contract;* Irregular; *Sugar, in bulk, in tank vehicles,* from the plant site and storage facilities of American Crystal Sugar Company at or near Chaska, MN, to points in ND. An underlying ETA seeks 90 days authority. Supporting shipper: American Crystal Sugar Company, 101 N 32rd St, Moorhead, MN 56560.

MC 146643 (Sub-4-20TA), filed June 4, 1980. Applicant: INTER-FREIGHT TRANSPORTATION, INC., 655 East 114th St., Chicago, IL 60628. Representative: Donald B. Levine, 39 S. LaSalle St., Chicago, IL 60603. *Contract;* irregular; *Such commodities as are dealt in or used by retail department stores (except commodities in bulk),* between points in the U.S. (except AK and HI), under continuing contract(s) with Ardan, Inc., of Des Moines, IA. Restricted to the transportation of traffic originating at or destined to facilities of Ardan, Inc. Supporting shipper: Ardan, Inc., 2320 Euclid, Des Moines, IA 50310.

MC 150849 (Sub-4-1TA), filed June 10, 1980. Applicant: NEIL CURTIS, P.O. Box 97, Blandinsville, IL 61420. Representative: Douglas G. Brown, P.C., The INB Center—Suite 555, One North Old State Capitol Plaza, Springfield, IL 62701. *Feed, feed ingredients, and soybean meal,* from MO and IA to IL. Supporting shipper: King Feed Company, P.O. Box 368, Blandinsville, IL 61420.

MC 108453 (Sub-4-2TA), filed June 10, 1980. Applicant: G & A TRUCK LINE, INC., 404 W. Peck Ave., White Pigeon, MI 49099. Representative: Edward Malinzak, 900 Old Kent Bldg., Grand Rapids, MI 49503. *Contract;* irregular; *Paper, paper products and scrap paper* (except in bulk), between the facilities of Continental Forest Industries, Consumer Products Division, of Three Rivers, MI, and PA, IA, NY, NJ, MN, KY and MO, under a continuing contract with Continental Forest Industries, Consumer Products Division. Supporting shipper: Continental Forest Industries, Consumer Products Division, P.O. Box 348, Three Rivers, MI 49093.

MC 141889 (Sub-4-2TA), filed June 10, 1980. Applicant: RONALD DEBOER d.b.a. RON DEBOER TRUCKING Route 1, Box 82, Sherry Station, Milladore, WI 54454. Representative: Wayne W. Wilson, 150 E. Gilman St. Madison, WI 53703. *Such commodities as are dealt in or used by manufacturers, converters, and printers of paper and paper products (except commodities in bulk),* from the facilities of Nekoosa Papers Inc. at or near Port Edwards, Nekoosa, and Stevens Point, WI to points in MT, NV, NM and WY. An underlying ETA seeks 90 days authority. Supporting shipper: Nekoosa Papers Inc., Port Edwards, WI 54469.

MC 141889 (Sub-4-1TA), filed June 10, 1980. Applicant: RONALD DEBOER d.b.a. RON DEBOER TRUCKING, Route 1, Box 82, Sherry Station, Milladore, WI 54454. Representative: Wayne W. Wilson, 150 E Gilman St., Madison, WI 53703. *Paper, paper products, plastic film, foil, cellulose products, and lignin pitch, in bags,* from Neenah, Menasha, Rothschild, and Wausau, WI to points in CA, Restricted to traffic originating at the facilities of American Can Company. Underlying ETA seeks 90 day authority. Supporting shipper: American Can Company, P.O. Box 702, Neenah, WI 54956.

MC 147343 (Sub-4-3TA), filed June 9, 1980. Applicant: TREADWAY CARRIERS, INC., 9333 N. Meridian St., Indianapolis, IN 46260. Representative: Charles E. Mayer (same address as applicant). *Petroleum Oils, Lubricating,* in barrels or boxes from Bradford, PA, Oil City, PA, Lemont, IL, Wood River, IL and Cincinnati, OH to Indianapolis, IN. An underlying ETA seeks 90 days authority. Supporting shipper: Guarantee Auto Stores, Inc., 5611 East 71st St., Indianapolis, IN 46220.

THE FOLLOWING PROTESTS WERE FILED IN REGION 5. SEND PROTESTS TO: CONSUMER ASSISTANCE CENTER, INTERSTATE COMMERCE COMMISSION, POST OFFICE BOX 17150, FORT WORTH, TX 76102.

MC 2960 (Sub-No. 5-3 TA), filed June 18, 1980. Applicant: ENGLAND TRANSPORTATION COMPANY OF TEXAS, 2301 McKinney Street, Houston, TX 77023. Applicant's representative: E. Larry Wells, P.O. Box 45538, Dallas, TX 75245. *General commodities (except articles of unusual value, Classes A & B explosives, household goods as defined by the Commission, commodities in bulk, and those requiring special equipment)* between Dallas on the one hand and, on the other, all points in TX. Restricted to traffic moving in foreign commerce. Supporting shipper(s): American President Lines Ltd, 608 N. St. Paul St., Dallas, TX 75201, Furness Interocean Corporation, P.O. Box 581199, Dallas, TX, 75258, Lyke Bros. Steamship Co., nc., P.O. Box 657, Dallas, TX, 75221, J. P. Harle Forwarding Co., P.O. Box 61014, DFW Airport, TX, 75261, Gulf Coast Shipping Corp., 1949 Stemmons Freeway, Dallas, TX, 75207, Japan Line (U.S.A.) Ltd., 1319 Cotton Exchange Bldg., Dallas, TX, 75201, Barber Blue Sea, 205 Cotton Exchange Bldg., Dallas, TX, 75201, Darrell J. Sekin Co., Inc., P.O. Box 5464, Dallas, TX, 75222 and The Harper Group, 1020 South Main, Suite 200, Grapevine, TX 76051.

MC 29910 (Sub-No. 5-28 TA), filed June 16, 1980. Applicant: ARKANSAS-BEST FREIGHT SYSTEM, INC., 301 South Eleventh Street, Fort Smith, Arkansas 72901. Representative: Joseph K. Reber (address same as above). *Lumber, lumber products, and wood products,* from the facilities of Navajo Forest Products Industries, Inc., at or near Navajo, NM, to points in the United States (except AK and HI). Supporting shipper: Navajo Forest Products Industries, Post Office Box 1280, Navajo, NM 87328.

MC 29910 (Sub-No. 5-30 TA), filed June 16, 1980. Applicant: ARKANSAS-BEST FREIGHT SYSTEM, INC., 301 South Eleventh Street, Fort Smith, AR 72901. Representative: Joseph K. Reber (address same as above). *Motor vehicles; hardware, conveyors and conveyor equipment; furniture; power*

equipment; wheel goods and bicycles, parts, attachments and accessories; lawn mowers; rotary tillers; yard tractors; shredders; edgers; motorized trail bikes; snow throwers; and materials, equipment, and supplies used in the manufacture, sale and distribution of the articles named above, between the facilities of MTD Products, Inc., at or near Cleveland, Liverpool, Shelby and Willard, OH; Indianola, MS; Brownsville, TN and Westfield, MA, on the one hand, and, on the other, points in the U.S. (except AK and HI). Supporting shipper: MTD Products, Inc., 979 South Conwell, Willard, OH.

MC 107496 (Sub-No. 5-20 TA), filed June 16, 1980. Applicant: RUAN TRANSPORT CORPORATION, 666 Grand Avenue, Des Moines, IA 50309. Applicant's representative: E. Check, same address as above (515) 245-2730. *Alcohol, in bulk, in tank vehicles,* (1) from Des Moines, IA to points in MN, NE and SD; (2) from Decatur, IL to points in MN, NE, SD and WI; and (3) from Peoria, IL to points in IA, MN, NE, SD and WI. Supporting shipper: Farmers Union Central Exchange dba Cenex, P.O. Box 43089, St. Paul, MN 55164.

MC 107496 (Sub-5-21TA), filed June 12, 1980. Applicant: RUAN TRANSPORT CORPORATION, 666 Grand Avenue, Des Moines, Iowa 50309. Representative: E. Check, (Same address as above) (515) 245-2730. *Water treatment compounds, in bulk, in tank vehicles,* from Duluth, MN to Atlantic City, WY. Supporting shipper: The Calgon Corp., P.O. Box 1346, Pittsburgh, PA 15230.

MC 107496 (Sub-5-22TA), filed June 12, 1980. Applicant: RUAN TRANSPORT CORPORATION, 666 Grand Avenue, Des Moines, Iowa 50309. Representative: E. Check (same address as above) (515) 245-2730. *Grease, in bulk, in tank vehicles,* from North Kansas City, MO to Blythe, CA and Harlingen, TX. Supporting shipper: Jesco Lubricant Company, 1437 Gentry Street, North Kansas City, MO 64116.

MC 107496 (Sub-5-23TA), filed June 18, 1980. Applicant: RUAN TRANSPORT CORPORATION, 666 Grand Avenue, Des Moines, IA 50309. Representative: E. Check, 666 Grand Avenue, Des Moines, IA 50309. *Fly ash, in bulk, in tank vehicles,* from Genoa, WI to points in IA and MN. Supporting shipper: Contech, Inc., 9500 W. Bloomington Freeway, Bloomington, MN 55420.

MC 108207 (Sub-5-14TA), filed June 17, 1980. Applicant: FROZEN FOOD EXPRESS, INC., P.O. Box 225888, Dallas, TX 75265. Representative: M. W. Smith (same address as applicant). *Meats, meat products, meat byproducts, and articles distributed by meat packinghouses, as described in Sections A and C of Appendix I to the report in Descriptions in Motor Carrier Certificates, 61 M.C.C. 209 and 766,* from Tolleson, AZ, to points in CA, CO (on and east of the Continental Divide), NV, NM, and UT. Supporting shipper: MBPXL Corporation, P.O. Box 2519, Wichita, KS 67201.

MC 118159 (Sub-5-4TA), filed June 16, 1980. Applicant: NATIONAL REFRIGERATED TRANSPORT, INC., P.O. Box 402535, Dallas, TX 75240. Representative: Matthew J. Reid, Jr., P.O. Box 2298, Green Bay, WI 54306. *Such commodities as are dealt in, or used by, wholesale and retail distributors of chemicals (except commodities in bulk)* from points in the United States in and east of ND, SD, NE, KS, OK, and TX to points in AL, FL, GA, NC, SC, and VA, restricted against the transportation of traffic originating at the facilities of Monsanto Company at Muscatine, IA. Supporting shipper: Moreland McKesson Chemical Company, Drawer 2169, Spartanburg, SC 29304.

MC 119399 (Sub-5-17TA), filed June 16, 1980. Applicant: CONTRACT FREIGHTERS, INC., P.O. Box 1375, 2900 Davis Boulevard, Joplin, MO 64801. Representative: Thomas P. O'Hara, (same address as applicant). *Bottled mineral water* from Santa Rosa, CA, to points in the United States in and each of the states of MT, WY, CO, and NM. Supporting shipper: Santa Mineral Waters, 55 College, Box 4737, Santa Rosa, CA 95403.

MC 124174 (Sub-5-9TA), filed June 16, 1980. Applicant: MOMSEN TRUCKING CO., 13811 "L" Street, Omaha, NE 68137. Representative: Karl E. Momsen, 13811 "L" Street, Omaha, NE 68137. *Terracotta, tile, marble, and granite,* from Laredo, Roma, Hidalgo, and Eagle Pass, TX to MN, OH, IL, WI, IA, IN, and MO. Supporting shipper(s): Marble Supply International, Inc., 400 E. Randolph Street, Chicago, IL 60601.

MC 124174 (Sub-5-10TA), filed June 16, 1980. Applicant: MOMSEN TRUCKING CO., 13811 "L" Street, Omaha, NE 68137. Representative: Karl E. Momsen, 13811 "L" Street, Omaha, NE 68137. *Iron and Steel Valves,* from Crane Company at Indian Orchard, MA to Carson, CA; Georgetown, SC; Houston, TX and Wintersburg, AZ. Supporting shipper(s): Crane Company, 203 Hampshire Street, Indian Orchard, MA 01051.

MC 125527 (Sub-5-1TA), filed June 16, 1980. Applicant: BUFORD OWENS AND JERRY C. OWENS, a partnership, d.b.a. OWENS BROS. TRUCKING & LIME CO., P.O. Box 376, Bernie, MO 63822. Representative: Thomas P. Rose, Attorney at Law, P.O. Box 205, Jefferson City, MO 65102. *Liquid Fertilizer and Liquid Fertilizer Ingredients, (excluding Petroleum and Petroleum Products), in bulk in tank vehicles,* from Pemiscott County, MO to points in AR, KY, TN and MS.

MC 126118 (Sub-5-19TA), filed June 16, 1980. Applicant: CRETE CARRIER CORPORATION, P.O. Box 81228, Lincoln, NE 68501. Representative: David R. Parker, P.O. Box 81228 Lincoln, NE 68501. *Frozen foodstuffs (except in bulk),* from points in CA to points in the United States (except AK, CA and HI). Restriction: Restricted to traffic originating at the facilities of United Institutional Distributors Corporation and destined to the facilities of the member affiliates of United Institutional Distributors Corporation. Supporting shipper: United Institutional Distributors Corp., Donald T. Kibby, Manager, 1803 W. March Lane, Stockton, CA 95207.

MC 126118 (Sub-5-20TA), filed June 16, 1980. Applicant: CRETE CARRIER CORPORATION, P.O. Box 81228, Lincoln, NE 68501. Representative: David R. Parker, P.O. Box 81228, Lincoln, NE 68501. *Such commodities as are dealt in and used by manufacturers and distributors of corn products (except commodities in bulk, in tank vehicles),* between the facilities utilized by Cornuts, Inc. at Urbana, OH; Oakland, CA; Greenfield, CA; and Portland, OR, on the one hand, and, on the other, points in the United States (except AK and HI) Supporting shipper: Cornuts, Inc., Oakland, CA.

MC 134134 (Sub-5-4TA), filed June 11, 1980. Applicant: MAINLINER MOTOR EXPRESS, INC., 4202 Dahlman Avenue, Omaha, NE 68107. Representative: James F. Crosby, James F. Crosby & Associates, Oak Park Office Bldg., Suite 210B, 7363 Pacific St., Omaha, NE 68114. *Equipment, materials, parts, and supplies used in the manufacture, sale, and distribution of coffee brewing machines,* from points in IL, MO, WI, MA, and NJ to the facilities of Bunn-O-Matic Corporation located at or near Creston, IA and Springfield, IL. Supporting shipper: Bunn-O-Matic Corporation, 1400 Stevenson Drive, Springfield, IL 62708.

MC 134467 (Sub-5-8TA), filed June 18, 1980. Applicant: POLAR EXPRESS, INC., P.O. Box 845, Springdale, AR 72764. Representative: Charles M. Williams, Kimball, Williams & Wolfe, P.C., 350 Capitol Life Center, 1600 Sherman Street, Denver, CO 80203 (303) 839-5856. (1) *Foodstuffs (except in bulk)* and (2) *Materials, equipment, and supplies used by restaurants in the conduct of their businesses (except in bulk),* from Tracy,

Stockton, Sacramento, Modesto and Visalia, CA; Memphis, TN; Elmira and Horseheads, NY; Hutchison, KS; Kansas City, MO; Ft. Worth and Sherman, TX; Knoxville and Algona, IA; Atlanta, GA and Denver, CO; and points in their respective commercial zones, to the facilities of Franchise Services, Inc. located at or near City of Industry, CA; Wichita and Kansas City, KS; Grand Prairie, TX; Jackson, MS; Burnsville, MN; Morrow, GA; Orlando, FL; Langhorne, PA; Albany, NY; and Indianapolis, IN. Supporting shipper: Franchise Services, Inc. P.O. Box 484, Wichita, KS 67201.

MC 142508 (Sub-5-26TA), filed June 18, 1980. Applicant: NATIONAL TRANSPORTATION, INC., 10810 South 144th Street, Post Office Box 37465, Omaha, NE 68137. Representative: Lanny N. Fauss, Post Office Box 37096, Omaha, NE 68137. *Chemical and chemical products (except in bulk in tank vehicles),* between Niagara Falls, NY and points in the United States (except AK and HI). Supporting shipper: Niacet Corporation, 400 Forty-Seventh Street, Niagara Falls, NY 14302.

MC 146336 (Sub-5-3TA), filed June 17, 1980. Applicant: WESTERN TRANSPORTATION SYSTEMS, INC., 1609 109th Street, Grand Prairie, TX 75050. Representative: D. Paul Stafford, P.O. Box 45538, Dallas, TX 75245. *High fidelity reproduction equipment, video reproduction equipment and component parts thereof* between the facilities of U.S. Pioneer Electronics Corporation at Los Angeles, CA, Irving, TX, Moonachie, NJ, and Chicago, IL. Supporting shipper(s): U.S. Pioneer Electronics Corporation, 1875 Walnut Hill Lane, Irving, TX 75061.

MC 147196 (Sub-5-5TA), filed June 16, 1980. Applicant: ECONOMY TRANSPORT, INC., P.O. Box 50262, New Orleans, LA 70150. Representative: Donald A. Larousse, P.O. Box 50262, New Orleans, LA 70150. *Iron and steel plates, structural steel, steel products not finished* from the plant site of shipper at Houston, TX to all points in the states of MD, MA, NJ, CT, PA, NY and VA. Supporting shipper: Alloy and Carbon Steel Co., Inc., 2040 83rd Street, North Bergen, NJ 07047.

MC 150496 (Sub-5-33TA), filed June 18, 1980. Applicant: P.A.M. TRANSPORT, INC., P.O. Box 188, Tontitown, AR 72770. Representative: Paul A. Maestri, P.O. Box 188, Tontitown, AR 72770. *Toys and Games* between the facilities of Wonder Products, Division of CBS Toys as Collierville, TN and points in and east of ND, SD, NE, KS, OK and TX. Supporting shipper: Wonder Products (Division of CBS Toys), 151 S. Main St., Collierville, TN 38017.

MC 150496 (Sub-5-4TA), filed June 18, 1980. Applicant: P.A.M. TRANSPORT, INC., P.O. Box 188, Tontitown, AR 72770. Representative: Paul A. Maestri, P.O. Box 188, Tontitown, AR 72770. *Paper bags, plastic bags and bags made of paper and plastic,* between the facilities of Great Plains Bag Corp. at (a) Des Moines, IA and points in TX, OK, KS, NE, ND, SD, MN and MO, and at (b) Jacksonville, AT to points in IA, NE, KS, OK, TX and MO, and at (c) New Philadelphia, OH to points in KY, TN, SC, GA, AL and FL. Supporting shipper: Great Plains Bag Corporation, 4515 Fleur Dr., U.F.S. Bldg, Des Mointes, IA 50321.

MC 151064 (Sub-5-1TA), filed June 18, 1980. Applicant: AEROJET FREIGHT SERVICE INC., 15836 Lee Rd., Houston, TX 77205. Representative: Mike Hjalmarson, 4409 Montrose, Suite 214, Houston, TX 77006. *General commodities restricted to freight with prior or subsequent movement by air.* Between Dallas, TX and Houston, TX. Supporting shipper(s): WORLD TRADE FORWARDING COMPANY, INC., P.O. Box 60398, Houston, TX 77205, Five Star Air Freight Corp., P.O. Box 60853, Houston, TX 77205.

MC 151065 (Sub-5-1TA), filed June 18, 1980. Applicant: KANSAS CITY PIGGYBACK, INC., P.O. Box 15236, Fairfax Sta., Kansas City, KS 66115. Representative: Tom B. Kretsinger, Kretsinger & Kretsinger, 20 East Franklin, Liberty, MO 64068. *General commodities (with the usual exceptions),* Between Kansas City, MO on the one hand and on the other, points and places in the states of AR, IA, KS, MO, NE and OK. Restricted to traffic having a prior or subsequent movement by rail piggyback. Supporting shipper(s): Parker Brothers, 50 Dunham Road, Beverly, MA 01915; Los Angeles Piggy Back Service, Inc., 5480 Ferguson Drive, Los Angeles, CA 90022; Memphis Consolidation Company, 595 West Alcy, Memphis, TN 38109; Waldinger Corp., 2601 Bell Avenue, Des Moines, IA 50321; Schneitter Fireworks & Importing Co., 409-11 South 4th Street, St. Joseph, MO 64501; Western Auto Supply Company Inc., 2107 Grand Ave., Kansas City, MO 64108; The Blueside Companies, Inc., 205 Florence Road, St. Joseph, MO; National Piggyback, P.O. Box 27176, Indianapolis, IN 46227.

MC 151066 (Sub-5-1TA), filed June 18, 1980. Applicant: HECK'S SERVICE CO., INC., I-55 East Service Rd., West Memphis, AR 72301. Representative: R. Connor Wiggins, Jr., Suite 909, 100 N. Main Bldg., Memphis, TN 38103. *Wrecked and/or disabled motor vehicles and trailers (other than house trailers or trailers designed to be drawn by passenger automobiles by hitch ball connector, and replacement vehicles and trailers therefor, by the use of wrecker equipment only* between West Memphis, AR; Memphis, TN; and Collierville, TN; and the respective commerical zones thereof, on the one hand, and, on the other, points in the United States (except AK and HI). Supporting shippers: 14.

THE FOLLOWING APPLICATIONS WERE FILED IN REGION 6. SEND PROTESTS TO: INTERSTATE COMMERCE COMMISSION, REGION 6 MOTOR CARRIER BOARD, P.O. BOX 7413, SAN FRANCISCO, CA 94120.

MC 143154 (Sub-6-1TA), filed June 16, 1980. Applicant: A & S TRUCKING, P.O. Box 4027, Missoula, MT 59801. Representative: Charles A. Murray, Jr., 2822 Third Avenue North, Billings, MT 59101. *Distilled spirits, wine and beverages in containers* between points in MT, ID, WA, OR, and CA, and from points in NY, NJ, MN, TN, IN, WI, IL, KY, CO, WY, KS, MO, and FL on the one hand, and to points in MT, ID, WA, CA, and OR on the other for 180 days. An underlying ETA seeks 90 days authority. Supporting shippers: There are nine shippers. Their statements may be examined at the San Francisco Regional office.

MC 116544 (Sub-6-8TA), filed June 16, 1980. Applicant: ALTRUK FREIGHT SYSTEMS INC., 1703 Embarcadero Road, Palo Alto, CA 94303. Representative: Richard G. Lougee, P.O. Box 10061, Palo Alto, CA 94303. *Meats, meat products, meat by-products and articles distributed by meat packing houses,* as described in Sections A and C of Appendix I to the report in Descriptions in Motor Carrier Certificates, 61 M.C.C. 209 and 766 (except commodities in bulk) from the facilities of Sterling Colorado Beef Company at Fort Morgan, CO to points in CT, DE, IL, IN, KY, ME, MD, MA, MI, NH, NJ, OH, PA, RI, TN, VT, VA, WV, WI and DC, for 180 days. Supporting shipper: Sterling Colorado Beef Company, Box 1728, Sterling, CO.

MC 143477 (Sub-6-10TA), filed June 12, 1980. Applicant: ARCADIAN MOTOR CARRIERS, 1831 Simpson, Kingsburg, CA 93631. Representative: James F. Hauenstein (same address as applicant). *Contract Carrier:* Irregular routes: *Cleaning and washing compounds, drug and personal care products, institutional and industrial maintenance supplies, such commodities as are dealt in by wholesale, retail and chain drug, grocery and food business houses, and*

equipment materials, and supplies used in the manufacturing and distribution of the above-described commodities (except commodities in bulk). From: The facilities of The Procter and Gamble Manufacturing Company at Long Beach, CA, Sacramento, CA, Chicago, IL, and Cincinnati, OH. To: Points in AZ, AR, CA, CO, ID, IL, IN, IA, KS, KY, LA, MA, MO, NE, NM, NY, OH, OK, OR, TN, TX, UT, WA, and WI, under continuing contract or contracts with The Procter & Gamble Company and its divisions and subsidiaries. For 180 days. Supporting shipper: The Procter & Gamble Company, P.O. Box 599, Cincinnati, OH 45201.

MC 109584 (Sub-6-7TA), filed June 16, 1980. Applicant: ARIZONA-PACIFIC TANK LINES, 3980 Quebec St., P.O. Box 7240, Denver, CO 80207. Representative: Rick Barker (same address as applicant). *Fertilizer,* in bulk, in tank vehicles, from points in Maricopa County, AZ to points in Conejos and Costilla Counties, Co, for 180 days. Supporting shipper: Kerley Chemical Co., 2801 W. Osborn, Phoenix, AZ 85017.

MC 120937 (Sub-6-1TA), filed June 16, 1980. Applicant: CITY DELIVERY, INC., P.O. Box 20686, Phoenix, AZ 85036. Representative: A. Michael Bernstein, 1441 E. Thomas Rd., Phoenix, AZ 85014. *Common carrier,* regular route: *General commodities (excluding Class A & B explosives, commodities in bulk and household goods)* between Phoenix, Fredonia, Page, Sedona, Cottonwood, Winslow, Holbrook, Tuba City, Clarkdale, Jerome and Jacob Lake, Arizona over the following routes: From Phoenix over Interstate Hwy 17 to junction AZ Hwy 279, and thence over AZ Hwy 279 to Cottonwood; from Cottonwood over AZ Hwy 89A to Clarkdale and Jerome, and return over the same route; from Cottonwood over U.S. 89A to Sedona and Flagstaff; and thence over U.S. 89 to Page and Kanab, UT; from Kanab, UT over U.S. 89A to Fredonia and Jacob Lake, AZ; from Jacob Lake, AZ over U.S. 89A to the junction with U.S. 89 at Bitter Springs; and thence over U.S. 89 to the junction of AZ Hwy 160; and thence over AZ Hwy 160 to Tuba City and return over the same route to the junction of AZ Hwy 160 and U.S. 89; thence along U.S. 89 to Flagstaff, AZ; thence along Interstate 40 to Winslow and Holbrook and return to Flagstaff over the same route; thence over Interstate 17 to Phoenix, AZ; serving Seligman as an off-route point and serving all intermediate points, for 180 days. Applicant proposes to interline at Phoenix, Flagstaff, Holbrook, AZ and Kanab, UT. Supporting shippers: There are 5 shippers. Their statements may be examined at the Regional office listed.

MC 151057 (Sub-6-1TA), filed June 16, 1980. Applicant: COMPUTER DATA CORPORATION d.b.a. FASHIONABLE FURNITURE MFG. COMPANY, 3170 Airway Avenue, Costa Mesa, CA 92626. Representative: Donald R. Hedrick, P.O. Box 88, Norwalk, CA 90650. *New furniture and furniture parts,* between Los Angeles, CA and its commercial zone on the one hand, and points in OR, WA, ID, MT, WY, SD, CO, UT, NV, AZ, NM, TX and OK on the other hand, for 180 days. Supporting shipper: Wicker and Cane, 20722 Belshaw Ave., Carson, CA 90746.

MC 151028 (Sub-6-1TA), filed June 13, 1980. Applicant: CONSOLIDATED FREIGHTWAYS CORPORATION OF DELAWARE, 175 Linfield Drive, Menlo Park, CA 94025. Representative: V. R. Oldenburg, P.O. Box 3062, Portland, OR 97208. *Contract carrier,* Irregular routes: *Foodstuffs, (except commodities in bulk),* from facilities owned or used by General Foods Corporation located at Houston, TX to Chicago, IL; Kansas City, MO; Indianapolis, IN; Louisville, KY; Detroit, MI; Cincinnati, OH; and Youngstown, OH, including all points in the Commercial Zones of the named points, for the account of General Foods Corporation, for 180 days. Supporting shipper: General Foods Corporation, 250 North Street, White Plains, NY 10625.

MC 148158 (Sub-6-5), filed ——. Applicant: CONTROLLED DELIVERY SERVICE, INC., P.O. Box 1299, 17295 East Railroad Avenue, City of Industry, CA 91749. Representative: Robert L. Cope, 1730 M Street NW., Suite 501, Washington, D.C. 20036. *General commodities* (except Classes A and B explosives, household goods as defined by the Commission, commodities in bulk, and those requiring special equipment), between the facilities utilized by Streamline Shippers Association, Inc., located at or near Los Angeles, CA, on the one hand, and, on the other, Phoenix, AZ; Atlanta, GA; Portland, OR; Memhis, TN; Dallas, El Paso, TX; Salt Lake City, UT; and Seattle, WA; and Houston, TX, for 180 days. Supporting shipper: Streamline Shippers Association, Inc.

MC 115826 (Sub-6-14TA), filed June 12, 1980. Applicant: W. J. DIGBY, INC., 6015 East 58th Ave., Commerce City, CO 80022. Representative: Howard Gore (same address as applicant's). *(1) Such commodities as are dealt in by drug, variety and food stores; (2) materials, supplies and equipment (except commodities in bulk) used by the manufacturer of commodities in (1),* between all points in the United States (except AK and HI). Restricted to the transportation of traffic originating at or destined to the facilities used by The Gillette Company, for 180 days. Supporting shipper: The Gillette Company, 43rd floor, Prudential Tower Building, Boston, MA 02199.

MC 144606 (Sub-6-1TA), filed May 21, 1980. Applicant: DUNCAN SALES & LEASING CO., INC., 714 E. Baseline Rd., Buckeye, AZ 85326. Representative: Andrew V. Baylor, 337 E. Elm St., Phoenix, AZ 85012. *(1) Such merchandise as is dealt in by wholesales, retail, chain grocery and food business houses and agricultural feed business houses and (2) materials, equipment, ingredients and supplies* used in the development, manufacture, distribution and sale of the products in (1) above. Restricted in (1) and (2) above against shipments in bulk. Between the facilities of Ralston Purina Company at or near Denver, CO and points in AZ, and NM, for 180 days. An underlying ETA seeks 90 days authority. Supporting shipper: Ralston Purina Company, Checkerboard Square, St. Louis, MO 63188.

MC 144547 (Sub-6-4TA), filed June 13, 1980. Applicant: DURA-VENT TRANSPORT CORP., P.O. Box 2249, 2525 El Camino Real, Redwood City, CA 94064. Representative: Barry Roberts, 888 17th St., NW., Washington, D.C. 20006. *Contract carrier:* irregular routes: *candy and confectionary products and equipment and supplies* used in the manufacture and distribution thereof, except commodities in bulk: between points in U.S. (except AK and HI) and restricted to traffic originating at or destined to the facilities of Charms Company in Freehold, NJ and Covington, TN and its suppliers, customers and distributors, under continuing contract(s) with Charms Company, for 180 days. Supporting shipper: Charms Company, Halls Mill Road, Freehold, NJ 07728.

MC 125433 (Sub-6-21TA), filed June 11, 1980. Applicant: F-B TRUCK LINE CO., 1945 South Redwook Rd., Salt Lake City, UT 84104. Representative: John B. Anderson (same address as applicant). *Such commodities as are dealt in* by the General Electric Company Housewares and Audio Business Division, between the facilities of General Electric Company Housewares and Audio Business Division located at San Leandro, Ontario, Garden Grove and Los Angeles, CA; Atlanta, GA; Broadview, IL; Lenexa, KS; Columbus OH; Mansfield, MA; Laurel, MD; Utica and Brockport, NY; Edison, NJ; Asheboro, NC; Allentown, PA; Grand Prairie, TX; and Seattle and Tukwila,

WA, on the one hand, and, on the other, points in the United States (except AK and HI), for 180 days. Supporting shipper: General Electric Company, 1285 Boston Avenue, Bridgeport, CT 06682.

MC 134599 (Sub-6-23TA), filed June 16, 1980. Applicant: INTERSTATE CONTRACT CARRIER CORP., P.O. Box 30303, Salt Lake City, UT 84127. Representative: Mr. Richard A. Peterson, P.O. Box 81849, Lincoln, NE 68501. *Plastic, cellular expanded or foamed (except in bulk)* from the facilities of Scott Paper Company, at or near Ft. Wayne, IN to Torrence and Carson, CA and Dallas, TX, and points in their respective commercial zones for 180 days. Supporting shipper: Scott Paper Co., Scott Plaza II, Philadelphia, PA 19113.

MC 151046 (Sub-6-1TA), filed June 16, 1980. Applicant: DAVE KUSLER BUSES LTD., P.O. Box 1053, Medicine Hat, Alberta, Canada TIA 7H1. Representative: George LaBissoniere, Suite 233, Evergreen Bldg., 15 So. Grady Way, Renton, WA 98055. *Passengers and their baggage* in *special or charter operations* between ports of entry on the International Boundary line between the U.S. and Canada located in MT and ID and points in MT and ID for 180 days. Supporting shippers: Kabet Travel, 557 2nd St., S.E., Medicine Hat, Alberta, Canada; Medicine Hat Blue Jays Baseball Club, Box 465, Medicine Hat, Alberta T1A 7G2; Scouts Canada Medicine Hat District, 1074 Black Blvd., N.W., Medicine Hat, Alberta; and Medicine Hat Youth Band, c/o Medicine Hat College, Medicine Hat, Alberta, Canada.

MC 144054 (Sub-6-1TA), filed June 16, 1980. Applicant: BILL LITTLEFIELD TRUCKING, INC., 775 E. Vilas Rd., Medford, OR 97501. Representative: Larry D. Knox, 600 Hubbell Bldg., Des Moines, IA 50309. (1) *Horticultural equipment, implements, and tools,* (2) *Plastic Articles,* and (3) *Insecticides, plant foods, and fertilizer,* from Des Moines, IA to points in the U.S. in and west of ND, SD, NE, KS, MO, OK, and TX, for 180 days. Supporting shipper: Ross Daniels, Inc., 1720 Fuller Road, West Des Moines, IA 50265.

MC 148530 (Sub-6-1TA), filed June 11, 1980. Applicant: MID MONTANA, INC., 1010 N. Rouse, Bozeman, MT 59715. Representative: Jerome Anderson, 100 Transwestern Bldg., Billings, MT 59101. *Agricultural implements, farm machinery, tools, parts and accessories,* from points in AL, CA, CO, GA, IL, IN, IA, KS, KY, ME, MI, MN, MO, MT, NE, NJ, NY, NC, ND, OH, OR, PA, RI, SD, TN, TX, WA, WV, WI and the International Boundary line between the U.S. and Canada at or near ports of entry in MT, ND, MN, MI and NY to Parker Montana Co. and/or Parker Dakota Co. and/or their dealer customers in MT, ND, SD, WY and ID for 180 days. An underlying ETA seeks 90 days authority. Supporting shipper: Parker Montana Company, 2100 Sixth Ave., Billings, MT 59107.

MC 127115 (Sub-6-1TA), filed June 10, 1980. Applicant: MILLER'S TRANSPORT, INC., 510 West 4th North, Hyrum, UT 84319. Representative: Bruce W. Shand, 430 Judge Bldg., Salt Lake City, UT 84111. *Equipment, materials, and supplies used in the manufacture and distribution of furniture,* (1) from points in and south of Santa Barbara, Ventura, Los Angeles, and San Bernardino Counties, CA to points in UT and ID and (2) from points in Salt Lake County, UT to points in ID for 180 days. An underlying ETA seeks 90 days authority. Supporting shipper: Van Waters & Rogers, a Division of Univar, 650 West 8th South, Salt Lake City, UT.

MC 144572 (Sub-6-4TA), filed June 16, 1980. Applicant: MONFORT TRANSPORTATION COMPANY, P.O. Box G, Greeley, CO 80631. Representative: John T. Wirth, 717—17th St., Suite 2600, Denver, CO 80202. *Malt beverages* (except in bulk), from the commercial zone of St. Paul, MN to the facilities of Murray Brothers Distribution Company at Denver, CO, for 180 days. An underlying ETA seeks 90 days authority. Supporting shipper: Murray Bros. Distributing Co., 1505 West Third Avenue, Denver, CO 80223.

MC 151054 (Sub-6-1TA), filed June 16, 1980. Applicant: GUNTHER H. M. KLIESE, d.b.a., P & M ENTERPRISES, 10650 S. W. Wilsonville Rd., Wilsonville, OR 97070. Representative: Lawrence, V. Smart, Jr., 419 N.W. 23rd Ave., Portland, OR 97210. *Contract carrier:* Irregular routes: *Frozen foods,* from the facilities of Chef Francisco at or near Eugene, OR to Syracuse, NY, Brentwood, NY and Bridgeport, NJ, for 180 days. Supporting shipper: Chef Francisco, 310 Seneca Street, P.O. Box 1187, Eugene, OR 97440.

MC 730 (Sub-6-5TA), filed June 16, 1980. Applicant: PACIFIC INTERMOUNTAIN EXPRESS CO., 25 North Via Monte, Walnut Creek, CA 94598. Representative: Alfred G. Krebs (same address as applicant). *Common carrier:* Regular routes: *General commodities, except those of unusual value, household goods as defined by the Commission, commodities in bulk, and those requiring special equipment.* (1) Between St. Louis, MO and Memphis, TN, serving no intermediate points: From St. Louis across the Mississippi River to junction IL Hwy 3, then over IL Hwy 3 to Cairo, IL, and then over U.S. Hwy 51 to Memphis, and return over the same route; (2) Between St. Louis, MO and Nashville, TN, serving the junction of Interstate Hwy 64 and Interstate Hwy 57 (at or near Mt. Vernon, IL) for the purpose of joinder only: From St. Louis over U.S. Hwy 40 to junction Interstate Hwy 64, then over Interstate Hwy 64 to junction U.S. Hwy 41, then over U.S. Hwy 41 to junction Alternate U.S. Hwy 41 (at or near Hopkinsville, KY), and then over Alternate U.S. Hwy 41 to Nashville, and return over the same route; (3) Between the junction of Interstate Hwy 64 and Interstate Hwy 57 (at or near Mt. Vernon, IL) and Nashville, TN, as an alternate route for operating convenience only, serving no intermediate points, and serving the termini for the purpose of joinder only: From the junction of Interstate Hwy 64 and Interstate Hwy 57 (at or near Mt. Vernon, IL) over Interstate Hwy 57 to junction Interstate Hwy 24, then over Interstate Hwy 24 to Nashville (also, from the junction of Interstate Hwy 57 and Interstate Hwy 24 over Interstate Hwy 24 to junction U.S. Hwy 68, then over U.S. Hwy 68 to junction Alternate U.S. Hwy 41, and then over Alternate U.S. Hwy 41 to Nashville), and return over the same route; (4) Between Memphis, TN and Nashville, TN, serving no intermediate points: From Memphis over U.S. Hwy 70 (also, over Interstate Hwy 40) to Nashville, and return over the same route; (5) Between Nashville, TN and Birmingham, AL, serving intermediate and off-route points in Jefferson County, AL; and serving the junction of Alternate U.S. Hwy 72 and U.S. Hwy 31 (at or near Decatur, AL) for the purpose of joinder only: From Nashville over U.S. Hwy 31 (also, over Interstate Hwy 65) to Birmingham, and return over the same route; (6) Between Memphis, TN and the junction of Alternate U.S. Hwy 72 and U.S. Hwy 31 (at or near Decatur, AL), as an alternate route for operating convenience only, serving no intermediate points, and serving the termini for the purpose of joinder only: From Memphis over U.S. Hwy 72 to junction AL Hwy 2, then over AL Hwy 2 to junction Alternate U.S. Hwy 72, and then over Alternate U.S. Hwy to its junction with U.S. Hwy 31, and return over the same route; (7) Between Memphis, TN and Birmingham, AL serving no intermediate points: From Memphis over U.S. Hwy 78 to Birmingham (also, from Memphis over U.S. Hwy 78 to junction U.S. Hwy 45, then over U.S. Hwy 45 to junction U.S. Hwy 82, then over U.S. Hwy 82 to junction U.S. Hwy 11, and then over U.S. Hwy 11 to Birmingham), and return over

the same route; (8) Between Nashville, TN and Chattanooga, TN serving no intermediate points: From Nashville over Interstate Hwy 24 to Chattanooga, and return over the same route; (9) Between the junction of Alternate U.S. Hwy 72 and U.S. Hwy 31 (at or near Decatur, AL) and Chattanooga, TN, as an alternate route for operating convenience only, serving no intermediate points, and serving the termini for the purpose of joinder only: From the junction of Alternate U.S. Hwy 72 and U.S. Hwy 31 (at or near Decatur, AL) over Alternate U.S. Hwy 72 to junction U.S. Hwy 72, then over U.S. Hwy 72 to junction Interstate Hwy 24, and then over Interstate Hwy 24 to Chattanooga, and return over the same route; (10) Between Nashville, TN and Morristown, TN serving the junction of Interstate Hwy 40 with U.S. Hwy 27 for the purpose of joinder only, and serving the intermediate points of Knoxville and Jefferson City, TN and the off-route points of Rockwood, Lenoir City, Alcoa, Harriman, Maryville and Newport, TN: From Nashville over Interstate Hwy 40 to Knoxville, and then over U.S. Hwy 11E to Morristown, and return over the same route; (11) Between Chattanooga, TN and Knoxville, TN, serving the intermediate points of McDonald and Cleveland, TN: From Chattanooga over Interstate Hwy 75 to junction Interstate Hwy 40, and then over Interstate Hwy 40 to Knoxville, and return over the same route; (12) Between Chattanooga, TN and the junction of U.S. Hwy 27 and Interstate Hwy 40, as an alternate route for operating convenience only, serving no intermediate points, and serving the termini for the purpose of joinder only: From Chattanooga over U.S. Hwy 27 to Interstate Hwy 40, and return over the same route; (13) Between Birmingham, AL and Greenville, SC, serving the junction of Interstate Hwy 20 with U.S. Hwy 27 (at or near Bremen, GA) for the purpose of joinder only, and serving the intermediate point of Atlanta, GA and intermediate and off-route points within 15 miles of Atlanta and within 25 miles of Greenville, SC: From Birmingham over Interstate Hwy 20 to Atlanta, then over Interstate Hwy 85 to Greenville, and return over the same route; (14) Between Chattanooga, TN and Atlanta, GA, serving the intermediate points of Dalton, Calhoun and Cartersville, GA and the off-route point of Chatsworth, GA: From Chattanooga over U.S. Hwy 41 (also, Interstate Hwy 75) to Atlanta, and return over the same route; (15) Between Chattanooga, TN and the junction of U.S. Hwy 27 and Interstate Hwy 20 (at or near Bremen, GA), as an alternate route for operating convenience only, serving no intermediate points, and serving the termini for the purpose of joinder only: From Chattanooga over U.S. Hwy 27 to junction Interstate Hwy 20, and return over the same route; (16) Between Birmingham, AL and Chattanooga, TN, as an alternate route for operating convenience only, serving no intermediate points, and serving tihe termini for the purpose of joinder only: From Birmingham over Interstate Hwy 59 to Chattanooga, and return over the same route; (17) Between Knoxville, TN and Greensboro, NC, serving the junction of U.S. Hwy 25 with U.S. Hwy 70 (Interstate Hwy 40) and the junction of Interstate Hwy 77 with U.S. Hwy 70 (Interstate Hwy 40) for the purpose of joinder only, and serving the intermediate points of Newport, TN, and Winston Salem, NC, and the off-route point of Burlington, NC: From Knoxville over U.S. Hwy 70 (Interstate Hwy 40) to Greensboro, and return over the same route; (18) Between Greenville, SC and Greensboro, NC, serving intermediate points in NC and the off-route points of Lincolnton and Bessemer City, NC: From Greenville over U.S. Hwy 29 (Interstate Hwy 85) to Greensboro, and return over the same route; (19) Between Greenville, SC and the junction of U.S. Hwy 25 with U.S. Hwy 70 (Interstate Hwy 40), as an alternate route for operating convenience only, serving no intermediate points, and serving the termini for the purpose of joinder only: From Greenville over U.S. Hwy 25 to its junction with U.S. Hwy 70 (Interstate Hwy 40), and return over the same route; (20) Between Asheville, NC and the junction of U.S. Hwy 74 with U.S. Hwy 29 (at or near Gastonia, NC), as an alternate route for operating convenience only, serving no intermediate points, and serving the termini for the purpose of joinder only: From Asheville over U.S. Hwy 74 to its junction with U.S. Hwy 29 (at or near Gastonia, NC) and return over the same route; (21) Between Charlotte, NC and the junction of Interstate Hwy 77 with U.S. Hwy 70 (Interstate Hwy 40), serving the intermediate points of Huntersville, Cornelius and Davidson, NC: From Charlotte over Interstate Hwy 77 to its junction with U.S. Hwy 70 (Interstate Hwy 40); (22) Between Kansas City, MO and Memphis, TN as an alternate route for operating convenience only, serving no intermediate points, and serving the termini for the purpose of joinder only: From Kansas City over U.S. Hwy 50 to junction U.S. Hwy 65, then over U.S. Hwy 65 to junction U.S. Hwy 60, then over U.S. Hwy 60 to junction U.S. Hwy 63, then over U.S. Hwy 63 to Memphis, and return over the same route; (23) Between Dallas, TX and Memphis, TN, serving no intermediate points: From Dallas over Interstate Hwy 30 to junction Interstate Hwy 40, then over Interstate Hwy 40 to Memphis, and return over the same route, for 180 days. An underlying ETA seeks 90 days authority. Supporting Shippers: There are 68 shippers. Their statements may be examined at the Regional office listed.

Note.—Applicant proposes to serve the commercial zones of the above-named points and it also intends to tack and interline. Common control may be involved.

MC 124160 (Sub-6-4TA), filed June 12, 1980. Applicant: SAVAGE BROTHERS, INCORPORATED, 585 South 500 East, American Fork, UT 84003. Representative: Lon Rodney Kump, 333 East Fourth South, Salt Lake City, UT 84111. *Ammonium Nitrate, in bulk,* from Moore County, TX, to AZ, CO, NV, NM, UT, and WY, for 180 days. An underlying ETA seeks 90 days authority. Support shipper: Papago Chemicals, Inc., P.O. Box Z-1, Chandler, AZ 85224.

MC 151058 (Sub-6-1TA), filed June 16, 1980. Applicant: TRADEWIND ENTERPRISE, INC., P.O. Box 6611, Portland, OR 97228. Representative: Russell M. Allen, 1200 Jackson Tower, Portland, OR 97205. *Radioactive isotopes and emergency medical supplies,* from Portland, Oregon International and Sea-Tac Washington International Airports, on the one hand, and points in OR and WA on the other (restricted to traffic having an immediate prior movement by air), for 180 days. Supporting shipper: E. R. Squibb & Sons, Inc., 5 Georges Road, New Brunswick, NJ 08903.

MC 113271 (Sub-6-3TA), filed June 12, 1980. Applicant: TRANSYSTEMS INC., P.O. Box 399, Black Eagle, MT 59414. Representative: Ray F. Koby, P.O. Box 2567, Great Falls, MT 59403. *Bentonite clay, in bulk,* from Crook County, WY to Butte County, SD, for 180 days. An underlying ETA seeks 90 days authority. Supporting shipper: American Colloid Co., P.O. Box 288, Skokie, IL 60077.

MC 123329 (Sub-6-3TA), filed June 13, 1980. Applicant: H. . TRIMBLE & SONS LTD., P.O. Box 3500, Calgary, Alberta, Canada T2P 2P9. Representative: D. S. Vincent, P.O. Box 3500, Calgary, Alberta, T2P 2P9. *Asphalt Emulsion,* in bulk, in tank vehicles, from Whatcom County, MI to ports of entry on the International Boundary Line between the United States and Canada located at Washington, for 180 days. Restricted to traffic in foreign commerce. An underlying ETA seeks 90 days authority.

Supporting shipper: Chevron Asphalt Ltd., 19770 101st Ave., Langley, B.C.

MC (Sub-6-2TA), filed June 12, 1980. Applicant: UNITED CHEMICAL CARRIERS, INC., 15812 La Monde, Hacienda Heights, CA 91745. Representative: Bobbie F. Albanese, 13215 E. Penn St., Suite 310, Whittier, CA 90602. *Aluminum plate or sheet and aluminum blanks* from Lancaster, PA, to points in AR, CA, CO, MS, OK, OR, TX and WA, for 180 days. Supporting shipper: Howmet Aluminum Corporation, Box 3167, Lancaster, PA 17604.

MC 26396 (Sub-6-30TA), filed June 16, 1980. Applicant: THE WAGGONERS TRUCKING, P.O. Box 31357, Billings, MT 59107. Representative: Bradford E. Kistler, P.O. Box 82028, Lincoln, NE 68501. *Building materials* (except in bulk), from Minneapolis, MN; Sedalia, MO; Salt Lake City, UT; Denver, CO; and Cicero, IL; and points in their commercial zones, to points in MT and WY, for 180 days. Supporting shipper: MacArthur Company, 1520 Monad Road, Billings, MT 59102.

MC 145404 (Sub-6-1TA), filed June 16, 1980. Applicant: WELLS CARTAGE LIMITED, 13200 Rice Mill Rd., Richmond, British Columbia, CD V64 1A1. Representative: Wallace Aiken, 1215 Norton Bldg., Seattle, WA 98104. *Contract carrier,* irregular routes: *Wood extractives, in bulk,* from Lebanon, OR, to points on the International Boundary line between the U.S. and Canada in WA for 180 days. Limited to foreign commerce. Supporting shipper: Borden Chemical Western, P.O. Box 58098, Vancouver, B.C., CD V65 6C5.

MC 145404 (Sub-6-2TA), filed June 16, 1980. Applicant: WELLS CARTAGE LIMITED, 13200 Rice Mill Rd., Richmond, British Columbia, CD V64 1A1. Representative: Wallace Aiken, 1215 Norton Bldg., Seattle, WA 98104. *Contract carrier,* irregular routes: *General commodities (excluding Class A & B explosives),* restricted to movements (1) in containers, (2) with prior or subsequent movement by water, (3) in foreign commerce, between ports of entry on the International Boundary between the U.S. and Canada, in WA and points in WA, OR and ID for 180 days. Supporting shipper: CP Ships, 999 West Pender St., Suite 510, Vancouver, B.C., CD V6C 1L6.

MC 141804 (Sub 6-53TA), filed June 12, 1980. Applicant: WESTERN EXPRESS, Division of Interstate Rental, Inc., 4015 Guasti Rd., P.O. Box 3488, Ontario, CA 91761. Representative: Frederick J. Coffman (same as applicant). *Commodities dealt in and utilized by book stores,* between points in the U.S. (except AK & HI). Restricted to traffic originating at or destined to the facilities of B. Dalton Book Seller, for 180 days. Supporting shipper: Rich Greener, Transportation Manager, B. Dalton Book Seller, 7505 Metro Blvd., Minneapolis, MN 55435.

MC 141804 (Sub 6-54TA), filed June 12, 1980. Applicant: WESTERN EXPRESS, Division of Interstate Rental, Inc., 4015 Guasti Rd., P.O. Box 3488, Ontario, CA 91761. Representative: Frederick J. Coffman (same as applicant). *Flour, flour products and items necessary for the manufacture and sale of flour and flour products,* between Kent, WA on the one hand, and, on the other, points in the U.S. (except AK & HI). Restricted to traffic originating at or destined to the facilities of Continental Mills, Inc., for 180 days. Supporting shipper: Ronald W. Wise, Vice President, Continental Mills, Inc., 7851 S. E. 192nd, Kent, WA 98031.

MC 141804 (Sub 6-55TA), filed June 12, 1980. Applicant: WESTERN EXPRESS, Division of Interstate Rental, Inc., 4015 Guasti Rd., P.O. Box 3488, Ontario, CA 91761. Representative: Frederick J. Coffman (same as applicant). *Glass fiber, rovings, strand, mat, yarn, fabric, waste materials and supplies used in the manufacture and distribution of the above named items; glass fiber, reinforced, rigid polypropylene sheet,* from the facilities of PPG Industries, Fiberglass Division at or near Lexington and Shelby, NC to points in AZ, CA, ID, IN, MI, MT, NV, OR and WA. Restricted to traffic originating at the above named points, for 180 days. Supporting shipper: R. L. Laughlin, Manager of Traffic, PPG Industries, Fiberglass Division, One Gateway Center, Pittsburgh, PA 15222.

MC 114416 (Sub 6-8TA) filed, June 12, 1980. Applicant: WESTERN TRANSPORT CRANE & RIGGING, 100 Western Way, Missoula, MT 59806. Representative: Theodore F. Anno, P.O. Box 3507, Missoula, MT 59806. *(1) Commodities which because of size or weight require special handling or special equipment, and (2) related articles and supplies when their transportation is incidental to the transportation of the commodities in (1) above.* Between points in Utah, on the one hand, and, on the other, points in AZ, CA, CO, ID, KS, MT, ND, NE, NM, NV, OK, OR, SD, TX, UT, WA, and WY, restricted to the transportation of shipments originating at or destined to facilities used by Titan Steel Corporation for 180 days. Supporting Shipper: Titan Steel Corp., 4315 S. 300 W., Salt Lake City, UT, 84104.

MC 114416 (Sub 6-9TA), filed June 16, 1980. Applicant: WESTERN TRANSPORT CRANE & RIGGING, 100 Western Way, Missoula, MT 59806. Representative: Theodore F. Anno, P.O. Box 3507, Missoula, MT 59806. *(1) Contractors Equipment, (2) Materials, equipment and supplies used in the manufacture of commodities in (1) abaove.* Between points in Bannock County, ID, on the one hand, and, on the other, points in the United States (including AK, excluding HI) for 180 days. Supporting shipper: W. H. Manufacturing Co., P.O. Box 4845, Pocatello, ID, 83201.

MC 119755 (Sub-6-1TA), filed June 17, 1980. Applicant: WEST-TRADE TRANSPORT LTD., P.O. Box 5300, Vancouver, BC, Canada, V6B 4B6. Representative: Jack R. Davis, 1100 IBM Bldg., Seattle, WA 98101. *DWine* (Except in bulk in tank vehicles), further restricted to shipments in foreign commerce only from points in CA to the U.S.-Canada international boundary at or near Blaine, WA for 180 days. An underlying ETA seeks 90 days authority. Supporting shippers: There are 6 shippers. Their statements may be examined at the Regional office listed.

MC 117786 (Sub-6-14TA), filed June 16, 1980. Applicant: RILEY WHITTLE, INC., P.O. Box 19038, Phoenix, AZ 85005. Representative: A. Michael Bernstein. 1441 E. Thomas Rd., Phoenix, AZ 85014. *(1) Foodstuffs, (2) meats, (3) meat products, (4) meat byproducts, (5) dairy products, and (6) commodities distributed or used by meat packers (except hides and commodities in bulk),* between the facilities of Lauridsen Foods, Inc. at or near Britt, IA and Armour and Company at Mason City, IA, Fairmont, MN, Kansas City, MO and Eau Claire, Monroe and Portage, WI, on the one hand, and on the other, points in and west of ND, SD, NE, KS, OK, MO and TX, restricted to traffic originating at or destined to the named points, for 180 days. Supporting shipper: Armour and Company, Greyhound Tower, Phoenix, AZ 85077.

MC 151069 (Sub-6-1TA), filed June 18, 1980. Applicant: AWC, INC., 3664 South Highland Dr., Las Vegas, NV 89102. Representative: Robert G. Harrison, 4299 James Dr, Carson City, NV 89701. *Radioactively contaminated and radioactive waste materials,* between points in the United States except AK and HI on the one hand, and authorized radioactive waste disposal sites located in the continental United States on the other hand, for 180 days. An underlying ETA seeks 90 days authority. Supporting shippers: There are 5 supporting

shippers. Their statements may be examined at the Regional Office listed.

MC 116544 (Sub-6-9TA), filed June 18, 1980. Applicant: ALTRUK FREIGHT SYSTEMS INC., 1703 Embarcadero Rd., Palo Alto, CA 94303. Representative: Richard G. Lougee, P.O. Box 10061, Palo Alto, CA 94303. *General commodities* (except those of unusual value, Class A or B explosives and commodities in bulk) between Tacoma, WA, on the one hand, and, on the other, points in AZ, CA, ID, OR, UT and WA, restricted to shipments having a prior or subsequent movement by water, for 180 days. Supporting shipper: Totem Ocean Trailer Express, Inc., P.O. Box 24908. Seattle, WA 98124.

MC 115931 (Sub-6-1TA), filed June 16, 1980. Applicant: BEE LINE TRANSPORTATION, INC., P.O. Box 3987, Missoula, MT 59801. Representative: Gene P. Johnson, P.O. Box 2471, Fargo, ND 58108. *Structural steel,* from the facilities of Mannstedt & Sons, Inc., at LaCrosse, WI, to Colstrip Power Plant at or near Colstrip, MT, and to Martin Marietta Cement Plant at or near Buffalo, IA, for 180 days. An underlying ETA seeks 90 days authority. Supporting shipper: Mannstedt & Sons, Inc., 1722 Miller Street, LaCrosse, WI 54601.

MC 138313 (Sub-6-5TA), filed June 16, 1980. Applicant: BUILDERS TRANSPORT, INC., 409 14th Street SW., Great Falls, MT 59404. Representative: Irene Warr, 430 Judge Bldg. Salt Lake City, UT 84111. *(1) Hides and pelts; (2) Scrap metals; (3) Such commodities as are used or dealt in by retail or wholesale hardware stores; and (4) Such commodities as are manufactured or distributed by steel mills or metal fabricators,* (a) Between the facilities of Pacific Hide & Fur Depot at or near Billings, Bozeman, Butte, Glasgow, Great Falls, Havre, Helena, Kalispell, Miles City, Missoula, Lewistown, and Sidney, MT; Seattle, Kennewick, Spokane and Tacoma, WA; Mills, Riverton, Worland, Gilette, and Rock Springs, WY; Salmon, Nampa, Sandpoint, Lewiston, Twin Falls, Boise, Burley, and Pocatello, ID; and Portland, OR. (b) Between the facilities of Pacific Hide & Fur Depot in (a) above, on the one hand, and, on the other, points in CA, CO, ID, MT, OR UT, WA & WY, for 180 days. Supporting shipper: Pacific Hide & Fur Depot, P.O. Box 1549, Great Falls, MT 59403.

MC 151060 (Sub-6-1TA), filed June 16, 1980. Applicant: DIEHL LUMBER TRANSPORTATION CO., 1885 South 900 West, Salt Lake City, UT 84125. Representative: Irene Warr, 430 Judge Bldg., Salt Lake City, UT 84111. *Shale cinders,* from the plant site of Utelite Corporation in Summit County, UT to OR, WA, ID and MT, for 180 days. An underlying ETA seeks 90 days authority. Supporting shipper: Olympian Stone Co., Inc., P.O. Box 685, Redmond, WA 98052.

MC 115826 (Sub-6-15TA), filed June 18, 1980. Applicant: W. J. DIGBY, INC., 6015 East 58th Avenue, Commerce City, CO 80022. Representative: Howard Gore (same address as applicant). *Meat and meat products* from the facilities used by Cudahy Foods Company at, or near, Independence and Waterloo, IA to points in NC and SC for 180 days. Supporting shipper: Cudahy Foods Company, Post Office Box 29029, Phoenix, AZ 85038. An underlying ETA seeks 90 days authority.

MC 125433 (Sub-6-22TA), filed June 16, 1980. Applicant: F-B TRUCK LINE COMPANY, 1945 South Redwood Road, Salt Lake City, UT 84104. Representative: John B. Anderson (same address as applicant.) (1) *Camping equipment and supplies; sporting goods and supplies; outdoor recreational furniture, goods and supplies,* from the facilities of Imperial American Company at Tyler, TX to points in the United States (except AK and HI), and (2) *equipment, material and supplies used in the manufacture and distribution of (1) above,* from points in the United States (except AK and HI), to the facilities of Imperial American Company at Tyler, TX for 180 days. Supporting shipper: Imperial American Company P.O. Box 878, Tyler, TX 75710.

MC 151062 (Sub-6-1TA), filed June 16, 1980. Applicant: FEDERAL TRANSPORTATION COMPANY, 512 Parker Road, Travis AFB, CA 94535. Representative: George W. Oliver (same as applicant). *Passenger automobiles, vans, pickup trucks and motor homes, in driveaway service,* between the ports of Oakland and San Francisco, CA, on the one hand, and, on the other, points in Solano, Yolo, Alameda, Contra Costa, Napa, Sonoma, Santa Cruz, Santa Clara, Sacramento, San Francisco, San Mateo, San Joaquin and Stanislaus Counties, CA, for 180 days. Supporting shipper: A & P Shipping Corp., 1050 Kikowaena Pl., Honolulu, HI 96819.

MC 151061 (Sub-6-1 TA), filed June 13, 1980. Applicant: ROBERTS HOLIDAY LINES, INC., 930 Poinsettia Avenue, Santa Ana, CA 92710. Representative: Gregory R. Erbe (same as applicant). *Passengers and their baggage,* either in the same or separate vehicles in round trip charter service, between points in the CA Counties of Los Angeles and Orange and points in the States of AZ, NV and UT, for 180 days. Supporting shipper(s): There are fifteen (15) shippers. Their statements may be examined at the Regional Office listed.

MC 124692 (Sub-6-8 TA), filed June 18, 1980. Applicant: SAMMONS TRUCKING, P.O. Box 4347, Missoula, MT 59806. Representative: James B. Hovland, Suite M-20, 400 Marquette Avenue, Minneapolis, MN 55402. *Wood burning stoves, parts and accessories therefor,* from St. Louis, MO to points in MN, ND, SD, WI, and IA, for 180 days. Supporting shipper: Central States Products Company, 871 Edgerton, St. Paul, MN 55101.

MC 124692 (Sub-6-9 TA), filed June 18, 1980. Applicant: SAMMONS TRUCKING, P.O. Box 4347, Missoula, MT 59806. Representative: James B. Hovland, Suite M-20, 400 Marquette Avenue, Minneapolis, MN 55402. *Scales, KD, scale parts, materials, accessories and supplies used in the manufacture and installation thereof,* (1) from Oakdale, CA to points in the U.S. in and west of ND, SD, WY, CO, NM, and TX (except AK and HI); and (2) between Oakdale, CA and Meridian, MS, for 180 days. Supporting shipper(s): Fairbanks Weighing Division, Holman Operation, Colt Industries, P.O. Box 726, Oakdale, CA 95361.

MC 136821 (Sub-6-2 TA), filed June 16, 1980. Applicant: SMERBER TRANSPORTATION, INC., Mira Loma Space Center Building #621, Mira Loma, CA 91752. Representative: James Smerber (same as applicant). *Contract Carrier,* Irregular routes: *Paper and paper products, materials, supplies, and equipment used in the production thereof,* from Everett, WA to various points in AZ, CA, NV, and OR, for 180 days. An underlying ETA seeks 90 days authority. Supporting shipper: Scott Paper Company, Scott Plaza II, Philadelphia, PA.

MC 151067 (Sub-6-1 TA), filed June 18, 1980. Applicant: TWILIGHT TRUCKING LTD., 4319 78 Avenue, Edmonton, Alberta, CA T6B2N3. Representative: Dale Thiessen (same as applicant). *Poly Vinyl Chloride Resins in Bags on Pallets,* from ports of entry on the International Boundary line between the U.S. and Canada located in MT, ID and WA to points in CA, OR, WA, UT and NE for 180 days. Supporting shipper: Diamond Shamrock Alberta Gas Limited, 2280 Sun Life Place, 10123 99 Street, Edmonton, Alberta, CA T5J3H1.

MC 150485 (Sub-6-3TA), filed June 18, 1980. Applicant: WESTSPAN HAULING, INC., 9122 South Tacoma Way, Tacoma, WA 98499. Representative: Henry C. Winters, 525 Evergreen Building, Renton, WA 98055. *Contract Carrier,* Irregular routes: *mobile homes and portable buildings* and *equipment, materials and*

supplies used in the distribution and installation of mobile homes and portable buildings, (1) from points in the commercial zone of Albany, OR to points in the commercial zone of Port Townsend, WA; and (2) from points in the commercial zones of Nampa, ID, Bend, OR and McMinnville, OR, to points in the commercial zone of Auburn, WA, for 180 days. Supporting shippers: Victorian Village, P.O. Box 239, Hadlock, WA 98339 and Factory Homes, 1820 Auburn Way North, Auburn, WA 98002.

MC 92633 (Sub-6-1TA), filed June 16, 1980. Applicant: ZIRBEL TRANSPORT, INC., P.O. Box 933, Lewiston, ID 83501. Representative: Timothy R. Stivers, P.O. Box 162, Boise, ID 83701. *Masonry Articles,* from ports of entry on the international boundary line between the U.S. and Canada located in ID, MT and WA to points in WY, for 180 days. Supporting shipper: The Masonry Center, Inc., 1424 North Orchard Street, Boise, ID 83706.

MC 52793 (Sub-6-6TA), filed June 19, 1980. Applicant: BEKINS VAN LINES CO.-NEW PRODUCTS DIVISION, 3090 Via Mondo, Compton, CA 90221. Representative: Patricia M. Schnegg, 707 Wilshire Boulevard, Suite 1800, Los Angeles, CA 90017. *New furniture and furnishings, cartoned and uncartoned,* from Fall River, MA to points in AZ, AR, CA, CO, ID, IL, IN, IA, KS, MI, MN, MO, MT, NE, NV, NM, ND, OK, OR, SD, TX, UT, WA, WI, and WY, for 180 days. Supporting shipper: Harvey Probber, Inc., Fall River, MA 02722.

MC 147766 (Sub-6-4TA), filed June 19, 1980. Applicant: COLORADO-DENVER/WAREHOUSE-DELIVERY, INC., 4902 Smith Road, Denver, CO 80216. Representative: Edward C. Hastings, 666 Sherman Street, Denver, CO 80203. *Common carrier;* Regular routes; *General commodities* (except those of unusual value, Classes A and B explosives, livestock, household goods as defined by the Commission, commodities in bulk, and commodities requiring special equipment); (1) From the facility of Colorado-Denver/Warehouse-Delivery, Inc., Denver, CO to Glenwood Springs, CO serving the intermediate points of Steamboat Springs and Craig, CO and off-route point of Aspen, CO; Over I-70 and U.S. Hwy 6 to jct. of CO Hwy 9; over CO Hwy 9 to jct. of U.S. Hwy 40; over U.S. Hwy 40 to jct. of CO Hwys 13 and 789; over CO Hwys 13 and 789 to jct. of I-70; over I-70 to Glenwood Springs, CO and return over I-70 (2) Between Gunnison, CO and Delta, CO serving all intermediate points; From Gunnison, CO to Delta, CO over U.S. Hwy 50, and return over the same route. Supporting shippers: Sears, Roebuck and Co., 1409 South Lamar Street, Dallas, TX 75295; J. C. Penney Company, Inc., 10500 Lackman Road, Lenexa, KS 66250; K-Mart Apparel Corp., 7373 W. Side Avenue, North Bergen, N.J. 07047.

MC 42487 (Sub-6-21TA), filed June 20, 1980. Applicant: CONSOLIDATED FREIGHTWAYS CORPORATION OF DELAWARE, 175 Linfield Drive, Menlo Park, CA 94025. Representative: V. R. Oldenburg, P.O. Box 3062, Portland, OR 97208. *Common Carrier,* regular routes: *General commodities, (except those of unusual value, Classes A and B explosives, household goods as defined by the Commission, commodities in bulk and commodities requiring special equipment),* serving the facilities of Swainsboro Print Works, Inc., Roper Lawn Products, P.T.R., Inc., A.T.O. Machine, Inc., and Automotic Sprinkler Corp. of America, at or near Swainsboro, GA, Edison Plastics, Concord Fabrics and Standard Cossa Thatcher Co., at or near Washington, GA Legion Equipment/Utensils and Perfection Products Company, at or near Waynesboro, GA, Thermo-King Corp., A C Division, and Jefferson Shirt Corp., at or near Louisville, GA, Polson Rubber, and Jebco, Inc., at or near Warrenton, GA, Phillips Air/Air Balance, and Glit, Inc., at or near Wrens, GA and Graswell Food and I.T.T. Grinnell, at or near Statesboro, GA, as off-route points in connection with carrier's otherwise authorized regular route operations, for 180 days. Applicant intent to tack to its existing authority and any authority it may acquire in the future. The proposed authority will be tacked or joined with authority in Docket No. MC 42487 Sub 744 and, Docket No. MC 42487 Sub 905F as off-route points. These authorities, in turn, will be tacked or joined with other present authorities of Consolidated Freightways at such points as Charlotte, NC, Columbia, SC, Winston-Salem, NC, Cincinnati, OH, Louisville, KY and Atlanta, GA to permit service to and from points throughout the United States. Applicant proposes to interline traffic with its present connecting carriers at authorized interline points throughout the United States as provided in tariffs on file with the Interstate Commerce Commission. Supporting shipper(s): There are eighteen (18) supporting shippers. Their statements may be examined at the Regional Office listed.

MC 136605 (Sub-6-11TA), filed June 19, 1980. Applicant: DAVIS TRANSPORT, INC., Post Office Box 8058, Missoula, MT 59807. Representative: Allen P. Felton, (same as applicant). *Lumber, Lumber Products, Wood, Wood Products and Forest Products* from the states of WA, OR and ID to points in the state of UT, for 180 days. Supporting shippers: There are 8 shippers. Their statements may be examined at the Regional Office listed.

MC 150005 (Sub-6-3TA), filed June 18, 1980. Applicant: BILL DOWNS d.b.a., BILL R. DOWNS TRUCKING, 2009 Fir Drive, Rock Springs, WY 82901. Representative: Bill R. Downs (same address as applicant). (1) *Machinery, materials, equipment and supplies* used in, or in connection with the discovery, development, production, refining, manufacture, processing, storage, transmission and distribution of natural gas and petroleum and their products and by products, and (2) *machinery, materials, equipment and supplies* used in or in connection with the construction, operation, repair, servicing, maintenance and dismantling of pipelines, including the stringing and picking up thereof, restricted against the transportation of complete oil drilling rigs, between points in WY, CO, UT, ID, MT, ND, SD, NV, and NE for 180 days. An underlying ETA seeks 90 days authority. Supporting shipper(s): There are (18) shippers. Their statements may be examined at the Regional Office listed.

MC 89716 (Sub-6-1TA), filed June 19, 1980. Applicant: DICK JONES TRUCKING, Box 965, Powell, WY 82435. Representative: Truman A. Stockton, Jr., The 1650 Grant St. Bldg, Denver, CO 80203. *Submergible pumping equipment, materials and supplies,* between MT and WY, on the one hand, and, on the other, points in CO, ID, KS, NE, ND, OK, SD, UT and WA for 180 days. An underlying ETA seeks 90 days authority. Supporting shipper: TRW Reda Pump Company, Box 1366, Thermopolis, WY; Centrilift, Inc., Box 816, Casper, WY 82602 and Southwest Electric, 6501 ES 74th, Oklahoma City, OK 73115.

MC 140024 (Sub-6-1TA), filed June 18, 1980. Applicant: J. B. MONTGOMERY, INC., 5565 East 52nd Ave., Commerce City, CO 80022. Representative: Don L. Bryce (same address as applicant). *General Commodities,* with usual exceptions, between points in the U.S., except AK and HI. Restricted to the facilities of Warner-Lambert Co. and its affiliates, subsidiaries and divisions, for 180 days. Supporting shipper: Warner-Lambert Company, 201 Tabor Road, Morris Plains, NJ 07950.

MC 140024 (Sub-6-2TA), filed June 18, 1980. Applicant: J. B. MONTGOMERY, INC., 5565 East 52nd Ave., Commerce City, CO 80022. Representative: Don L.

Bryce (same address as applicant). *Meat and packinghouse products, fresh and frozen;* from Maricopa County, AZ to all points in and west of MI, IL, MO, AR, and LA (except AZ), for 180 days. An underlying ETA seeks 90 days authority. Supporting shipper: M.P.B.X.L. Corp., P.O. Box 2519, Wichita, KS 67201.

MC 151084 (Sub-6-1TA), filed June 19, 1980. Applicant: PACIFIC STATES TRANSPORT, INC., 10244 Arrow Highway, Rancho Cucamonga, CA 91730. Representative: Michael J. Norton, 1905 South Redwood Road, Salt Lake City, UT 84104. *Contract Carrier,* Irregular routes: *Such commodities as are dealt in by retail lumber and building material stores, home improvement stores and home furnishing stores* (except in bulk), between points in the United States (except AK and HI). Restricted to the transportation of traffic handled for Flintkote Supply Co., a Division of Flintkote Supply Co., a Division of the Flintkote Co., for the account of Flintkote Supply Co., a Division of the Flintkote Co., for 180 days. Supporting shipper: Flintkote Supply Company, a Division of the Flintkote Company, P.O. Box 800, Dallas, TX 75221.

MC 141532 (Sub-6-7TA), filed June 19, 1980. Applicant: PACIFIC STATES TRANSPORT, INC., 10244 Arrow Highway, Rancho Cucamonga, CA 91730. Representative: Michael J. Norton, 1905 South Redwood Road, Salt Lake City, UT 84104. *Iron and steel articles* from the facilities of Soule Steel in Los Angeles County, CA to points in ID, NV, and UT, for 180 days. Supporting shipper: Soule Steel Company, 2201 East Carson, Carson, CA 90745.

MC 150584 (Sub-6-1TA), filed June 19, 1980. Applicant: PAPER MERCHANTS TRANSPORT & SUPPLY, INC., 175 Second St., Oakland, CA 94607. Representative: Myron F. Tower, 2257 Bancroft Ave., San Leandro, CA 94577. *Contract carrier,* irregular routes, *Paper bags in bales; paper, wrapping, NOI, in rolls or cartons; and return shipments of empty pallets,* between the facilities of Cupples Paper Bag Co., Northwest Division, at Portland, OR, and points in San Francisco, San Mateo, Santa Clara, Alameda, Marin, Sonoma, Solano, Contra Costa, Los Angeles, San Diego, Riverside, Fresno and Monterey Counties, CA, for 180 days. Supporting shipper: Cupples Paper Bag Co., Northwest Div., 525 University Ave., Room 920, Palo Alto, CA 94301.

MC 52709 (Sub-6-12TA), filed June 19, 1980. Applicant: RINGSBY TRUCK LINES, INC., 3980 Quebec St., P.O. Box 7240, Denver, CO 80207. Representative: Robert P. Tyler (same address as applicant). *Alcoholic liquors and wine* (except in bulk), from points in MD, MA, NJ, NY and the District of Columbia, to Denver, CO, for 180 days. An underlying ETA seeks 90 days authority. Supporting shipper: McKesson Wine & Spirit Co., 1800 Bassett, Denver, CO 80204.

MC 149708 (Sub-6-1TA), filed June 19, 1980. Applicant: ROAD WEST, INC., 1315 E. Holt Blvd., (P.O. Box 3637), Ontario, CA 91761. Representative: Robert Fuller, 13215 E. Penn St., Suite 310, Whittier, CA 90602. *Frozen foods and prepared meats and foods requiring temperature control* in straight or mixed shipments with or without *prepared fish and fish foods* between facilities of Van de Kamp's, and, cold storage warehouses from which Van de Kamp's frozen foods, fish and fish products are shipped, in Los Angeles County, CA, Allegheny and Erie Counties, PA, on the one hand, and on the other, points in CA, CO, IL, KS, LA, MI, NM, OK, OR, PA, TX and WA for 180 days. Supporting shipper: Van de Kamps Frozen Foods, 13100 Arctic Circle Drive, Santa Fe Springs, CA 90670.

MC 77061 (Sub-6-11TA), filed June 20, 1980. Applicant: SHERMAN BROS., INC., P.O. Box 706, Eugene, OR 97440. Representative: Russell M. Allen, 1200 Jackson Tower, Portland, OR 97205. *Waste paper in bales* from Shasta, Butte, and Tehama Counties in CA and Ada, Canyon and Twin Falls Counties in ID to Coos and Multnomah Counties in OR, for 180 days. Supporting shippers: General Recycling, P.O. Box 8651, Boise, ID 83707, Western Recycling and Wastepaper Co., Inc., 1990 So. Cole Road, Suite B, Boise, ID 83709, Clayton-Ward Co., 1620 Candlewood Drive N.E., Salem, OR 97303.

MC 138875 (Sub-6-17TA), filed June 19, 1980. Applicant: SHOEMAKER TRUCKING COMPANY, An Idaho Corporation, 11900 Franklin Road, Boise, ID 83709. Representative: F. L. Sigloh (same address as applicant). *Hardwood and doors (except in bulk),* from Pierce City, MO, Jeffersonville, OH, Oshkosh, Shawano and Wausau, WI and McGregor, MN to points in CA, ID, OR, UT and WA, for 180 days. An underlying ETA seeks 90 days authority. Supporting shipper(s): L. L. Hall, Manager, Interior Wood Products, 119 Thompson Road, Redmond, WA 98052. Peter Challinor, President, Challinor Wood Products, 540 Frontage Rd., Suite 231, Northfield, IL 60093.

MC 148737 (Sub-6-2TA), filed June 19, 1980. Applicant: SUNSET EXPRESS CORP., 3665 West 1987 South, Salt Lake City, UT 84104. Representative: Carl I. Sundeaus (same as applicant). *Such commodities as are dealt in by retail or discount department stores* (except commodities in bulk) from all points in the U.S. (except AK, HI, ID, MT, ND, NM, OR and WY) to the facilities used by Gibson Discount Center at or near Salt Lake City UT, for 180 days. Restricted to traffic originating for and destined to the facilities of Gibson Discount Center. An underlying ETA seeks 90 days authority. Supporting shipper: Gibson Discount Center, Inc., 5954 South State St., Salt Lake City, UT 84107.

MC 146822 (Sub-6-2TA), filed June 19, 1980. Applicant: EUGENE L. FRAZIER d.b.a., SUNSET TRANSPORT SYSTEMS, 2200 N. Parmalee, Compton, CA 90222. Representative: Milton W. Flack, 8383 Wilshire Blvd., Suite 900, Beverly Hills, CA 90211. *(1) Fluorescent lighting fixtures; (2) Materials, equipment and supplies* used in the manufacture, sale and distribution of the commodities in (1) above (except commodities in bulk), from the facilities of Globe Illumination Company at Gardena, CA, to Seattle, WA, Portland, OR, Chicago, IL, Dallas, TX, Philadelphia and Pittsburgh, PA, Charlotte, NC, Phoenix and Tucson, AZ, Denver, CO, Miami, FL, Atlanta, GA, Salt Lake City, UT, Boise, ID, St. Louis, MO, Indianapolis, IN, Detroit, MI, Minneapolis, MN, Cleveland, Akron and Toledo, OH, Oklahoma City, OK, Madison and Greenbay, WI, and Albuquerque, NM; *(3) Lenses* from Newark, NJ, to the facilities of Globe Illumination Company at Gardena, CA, for 180 days. Supporting shipper: Globe Illumination Company, 1515 W. 178 Street, Gardena, CA 90248.

MC 148404 (Sub-6-3TA), filed June 19, 1980. Applicant: UNITED CHEMICAL CARRIERS, INC., 15812 La Monde, Hacienda Heights, CA 91745. Representative: Bobbie F. Albanese, 13215 E. Penn St., Suite 310, Whittier, CA 90602. *Insecticides and pet supplies, packed in boxes and drums, occasional necessity for temperature control,* from the facilities of Zoecon Industries in Dallas, TX, to points and places in the United States, excluding AK, HI and TX, for 180 days. Supporting shipper: Zoecon Industries, 12200 Denton Drive, Dallas, TX 75234.

MC 114416 (Sub-6-10TA), filed June 19, 1980. Applicant: WESTERN TRANSPORT CRANE & RIGGING, 100 Western Way, Missoula, MT 59806. Representative: Theodore F. Anno, P.O. Box 3507, Missoula, MT 59806. *(1) Chemicals (except in bulk and tank vehicles), (2) Storage tanks,* between points in CA, CO, IL, KS, MI, MN, MO, ND, NV, OH, SD, TX, UT, WY, on the one hand, and, on the other, points in

MT, ND, SD, WY and UT, restricted to the transportation of shipments originating at, or destined to facilities used by Dyce Sales & Engineering, for 180 days. Supporting shipper: Dyce Sales & Engineering Service Co., Inc., 1353 Taylor Place, Box 30176, Billings, MT 49107.

MC 114416 (Sub-6-11TA), filed June 19, 1980. Applicant: WESTERN TRANSPORT CRANE & RIGGING, 100 Western Way, Missoula, MT 59806. Representative: Theodore F. Anno, P.O. Box 3507, Missoula, MT 59806. *Contractors and mining equipment, Materials and Supplies,* between, points in OH, IN, PA, WI, NM, WY, MT, CO, restricted to the transportation of shipments originating at, or destined to facilities used by Big Horn Equipment Co., Inc. for 180 days. Supporting shipper: Big Horn Equipment Co., Inc., 2100 E. Yellowstone Hwy., Casper, WY 82601.

MC 143775 (Sub-6-15TA), filed June 19, 1980. Applicant: PAUL YATES, INC., 6601 West Orangewood, Glendale, AZ 85301. Applicant's representative: Michael R. Burke (same address as applicant). *Such commodities as are dealt in or used by manufacturers of photographic products,* (1) between the facilities of Eastman Kodak Company at Rochester, NY, on the one hand, and, on the other, the facilities of Eastman Kodak Company at Windsor, CO, Chamblee, GA, and Dallas, TX, and points in CA, and (2) between the facilities of Eastman Kodak Company at Windsor, CO, on the one hand, and, on the other, points in CA, for 180 days. An underlying ETA seeks 90 days authority. Supporting shipper: Robert E. Rissberger, Eastman Kodak Company, 2400 Mt. Read Blvd., Rochester, NY 14580.

Agatha L. Mergenovich,

Secretary.

[FR Doc. 80-19510 Filed 6-30-80; 8:45 am]

BILLING CODE 7035-01-M

DEPARTMENT OF JUSTICE

Notice of Proposed Consent Judgment in Action To Enjoin Discharge of Air Pollutants

In accordance with Departmental Policy, 28 CFR 50.7, 38 FR 19029, notice is hereby given that a proposed consent decree in *United States* v. *Monongahela Power Company,* Civil has been lodged with the District Court for the Northern District of West Virginia. The proposed decree requires the defendant to comply with the terms of the West Virginia Implementation Plan. The decree also requires the defendant to pay a civil penalty of $4,000 for its past violations.

The Department of Justice will receive written comments relating to the proposed judgment for thirty days from the date of publication of this notice. Comments should be addressed to the Assistant Attorney General of the Land and Natural Resources Division, Department of Justice, Washington, D.C. 20530 and refer to *"United States* v. *Monongahela Power Company",* D.J. Ref. No. 90-5-2-1-292.

The proposed decree may be examined at the Office of the United States Attorney, United States Courthouse; Wheeling, West Virginia; at the Region III Office of the Environmental Protection Agency, Enforcement Division, Curtis Building, 6th and Walnut Streets, Philadelphia, Pennsylvania 19106 and at the Pollution Control Section, Land and Natural Resources Division of the Department of Justice, Room 2644, Washington, D.C. 20530. A copy of the proposed consent decree may be obtained in person or by mail from the Pollution Control Section, Land and Natural Resources Division of the Department of Justice.

Angus MacBeth,

Deputy Assistant Attorney General, Land and Natural Resources Division.

[FR Doc. 80-19473 Filed 6-27-80; 8:45 am]

BILLING CODE 4410-01-M

Notice of Proposed Consent Judgment in Action to Enjoin Discharge of Air Pollutants

In accordance with Departmental Policy, 28 CFR 50.7 38 FR. 19029, notice is hereby given that a proposed consent decree in *United States* v. *Philadelphia Electric Co.,* Civil Action No. 80-2228, has been lodged with the District Court for the Eastern District of Pennsylvania. The proposed decree requires the defendant to comply with the particulate, and sulfur dioxide emission standards in the Pennsylvania implementation plan at its Eddystone and Cromby power plants. The decree requires the installation of flue gas desulfurization equipment at these two plants.

The Department of Justice will receive written comments relating to the proposed judgment for thirty days from the date of publication of this notice. Comments should be addressed to the Assistant Attorney General of the Land and Natural Resources Division, Department of Justice, Washington, D.C. 20530 and refer to "*United States* v. *Philadelphia Electric Co.,*" D.J. Ref. No. 90-5-2-1-275.

The proposed decree may be examined at the Office of the United States Attorney, United States Courthouse, Philadelphia, Pennsylvania, at the Region III Office of the Environmental Protection Agency, Enforcement Division, Curtis Building, 6th and Walnut Streets, Philadelphia, Pennsylvania 19106 and at the Pollution Control Section, Land and Natural Resources Division of the Department of Justice, Room 2644, Washington, D.C. 20530. A copy of the proposed consent decree may be obtained in person or by mail from the Pollution Control Section, Land and Natural Resources Division of the Department of Justice. All requests for copies should be accompained by a check or money order made out to the Treasurer of the United States for the Sum of $12.70.

Angus Macbeth,

Deputy Assistant Attorney General, Land and Natural Resources Division.

[FR Doc. 80-19535 Filed 6-27-80; 8:45 am]

BILLING CODE 4410-01-M

Antitrust Division

United States v. Texas Citrus and Vegetable Growers and Shippers; Proposed Final Judgment, and Competitive Impact Statement

Notice is hereby given pursuant to the Antitrust Procedures and Penalties Act, 15 U.S.C. Section 16(b) through (h), that a proposed Final Judgment, Stipulation, and Competitive Impact Statement (CIS) have been filed with the United States District Court for the Southern District of Texas in *United States of America* v. *Texas Citrus and Vegetable Growers and Shippers,* Civil Action No. B-76-41. The complaint in this case alleged that Texas Citrus and Vegetable Growers and Shippers (TCVGS) and co-conspirators engaged in a combination and conspiracy to fix and stabilize the rates to be paid for the interstate transportation of fresh produce from the lower Rio Grande Valley of Texas in violation of Section 1 of the Sherman Act, 15 U.S.C. 1. The proposed Consent Judgment enjoins the defendant from entering into or maintaining any agreement, understanding, plan, program or combination or conspiracy with any other person to fix or stabilize the rates to be paid for truck transportation of fresh produce. The proposed Judgment further enjoins defendant from discussing, approving, preparing, distributing or recommending any schedule of rates for truck transportation and prohibits advocating, suggesting or compelling or influencing any person to use any specific rate for

the truck transportation of fresh produce.

TCVGS is also required to distribute a prescribed notice to all its members for redistribution by them to all truckers with whom they do business. The prescribed notice advises recipients about the law suit, the proposed Judgment, and that all rate sheets published, endorsed, or recommended by the association are null and void.

Public comment is invited within the statutory 60 day comment period. Such comments and responses thereto will be published in the Federal Register and filed with the court. Comments should be directed to Charles R. McConachie, Chief, Dallas Field Office, Antitrust Division, 1100 Commerce Street, Room 8C6, Dallas, Texas 75242, telephone (214) 767-8051.

Joseph H. Widmar,

Director of Operations.

United States District Court for the Southern District of Texas; Brownsville Division

United States of America, Plaintiff, v. *Texas Citrus and Vegetable Growers and Shippers,* Defendant. [Civil No. B-77-41].

Filed: June 12, 1980.

Stipulation

It is stipulated by and between the undersigned parties, by their respective attorneys, that:

1. A Final Judgment in the form hereto attached may be filed and entered by the Court, upon the motion of any party or upon the Court's own motion, at any time after compliance with the requirements of the Antitrust Procedures and Penalties Act [15 U.S.C. § 16], and without further notice to any party or other proceedings, provided that plaintiff has not withdrawn its consent, which it may do at any time before the entry of the proposed Final Judgment by serving notice thereof on defendant and by filing that notice with the Court.

2. In the event plaintiff withdraws its consent or if the proposed Final Judgment is not entered pursuant to this Stipulation, this Stipulation shall be of no effect whatever and the making of this Stipulation shall be without prejudice to plaintiff or defendant in this or any other proceeding.

Dated: June 12, 1980.

For the Plaintiff: United States of America. Sanford M. Litvack, *Assistant Attorney General.* Joseph H. Widmar, Charles R. McConachie, *Attorneys, Department of Justice.*

For the Defendant: Texas Citrus and Vegetable Growers and Shippers. James C. Abbott, *Attorney in Charge,* P.O. Box 3670, 1630 North 10th Street, McAllen, Texas 78501.

Of Counsel: Ewers, Toothaker, Ewers, Abbott, Talbot, Hamilton & Jarvis. Alan A. Pason, *Attorney, Department of Justice,* U.S. Department of Justice, Antitrust Division, 1100 Commerce Street, Room 8C6, Dallas, Texas 75242, (214) 767-8051.

United States District Court for the Southern District of Texas; Brownsville Division

United States of America, Plaintiff, v. *Texas Citrus and Vegetable Growers and Shippers;* Defendants. [Civil No. B-77-41]. Filed: June 12, 1980.

Final Judgment

Plaintiff, United States of America, having filed its Complaint herein on February 18, 1977, and plaintiff and defendant, by their respective attorneys, having each consented to the making and entry of this Final Judgment without trial or adjudication of any issue of fact or law herein and without any finding by the Court that defendant has violated any antitrust law of the United States, and without this Final Judgment constituting evidence or admission by plaintiff or defendant, or either of them, in respect to any such issue;

Now, Therefore, before any testimony has been taken herein and without trial or adjudication of any issue of fact or law herein, and upon consent of the parties as aforesaid, it is hereby

Ordered, Adjudged, and Decreed as follows:

I

This Court has jurisdiction of the subject matter herein and of the parties hereto. The Complaint states claims upon which relief may be granted against defendent under Section 1 of the Sherman Act, 15 U.S.C. § 1.

II

As used in this Final Judgment:

(A) "Person" shall mean any individual, corporation, partnership, firm, association or other business or legal entity.

(B) "Fresh produce" includes, but is not necessarily limited to, beets, cabbage, cantaloupes, carrots, cauliflower, cucumbers, eggplant, grapefruit, green onions, honeydew melons, lettuce, onions, oranges, peppers, squash, and tomatoes.

(C) "Defendant" shall mean Texas Citrus and Vegetable Growers and Shippers (TCVGS).

(D) "Member" shall mean any person who was or is listed as such by defendant.

(E) "Motor carrier" shall mean any person engaging in the transportation of fresh produce by motor vehicle for compensation.

III

The provisions of this Final Judgment shall apply to defendant, its officers, directors, agents, employees, affiliates, successors and assigns, and to all other persons, including members, in active concert or participation with any of them who receive actual notice of this Final Judgment by personal service or otherwise.

IV

Defendant whether acting unilterally, or in concert, agreement or understanding with any other person is enjoined and restrained from directly or indirectly:

(A) Entering into, adhering to, maintaining, or furthering any contract, agreement, understanding, plan, or program to fix, determine, maintain, or stabilize rates paid, or offered to be paid, to motor carriers.

(B) Discussing, adopting, publishing, distributing or recommending any printed list or other schedule of rates paid, or offered to be paid, to motor carriers.

(C) Advocating, suggesting, urging, inducing, coercing, or compelling any member or any person to adopt, use, or adhere to any uniform or specific rate paid, or offered to be paid, to motor carriers.

Provided, however, that nothing in this Final Judgment shall prohibit defendant from seeking the enactment, issuance, repeal, amendment or interpretation of any federal or state law or regulation applicable to the transportation of fresh produce.

V

Defendant is ordered and directed to:

(A) Provide, by mail or otherwise, within sixty (60) days after the date of entry of this Final Judgment a copy of this Final Judgment to each of its officers and members and to each person who was an officer or member at any time from January 1, 1973 to the date of entry of this Final Judgment;

(B) Provide, by mail or otherwise, a copy of this Final Judgment to each person who becomes a member of defendant within 5 years after the date of the entry of this Final Judgment; and

(C) Provide, by mail or otherwise, within (60) days from the date of entry of this Final Judgment, written notices in the form attached hereto as Appendix "A" to its members, in sufficient quantities, with instructions that such members redistribute these notices to motor carriers with whom such members do business.

VI

Defendant is ordered and directed to file with this Court, and with plaintiff herein, within ninety (90) days after date of entry of this Final Judgment, an affidavit setting forth the fact and manner of its compliance with Sections V (A) and (C).

VII

For the purpose of determining or securing compliance with this Final Judgment, and subject to any legally recognized privilege, from time to time:

(A) Duly authorized representatives of the Department of Justice shall, upon written request of the Attorney General or of the Assistant Attorney General in charge of the Antitrust Division, and on reasonable notice to defendant made to its principal office, be permitted:

(1) Access during office hours of defendant to inspect and copy all books, ledgers, accounts, correspondence, memoranda, and other records and documents in the possession or under the control of defendant, who may have counsel present, relating to any matters contained in this Final Judgment, and

(2) Subject to the reasonable convenience of defendant and without restraint or interference from it, to interview directors, officers, employees or agents of defendant, who may have counsel present, regarding any such matters contained in this Final Judgment.

(B) Upon the written request of the Attorney General or of the Assistant Attorney General in charge of the Antitrust

Division made to defendant's principal office, defendant shall submit such written reports, under oath if requested, with respect to any of the matters contained in this Final Judgment as may be requested.

No information or documents obtained by the means provided in this Section VII shall be divulged by any representative of the Department of Justice to any person other than a duly authorized representative of the Executive Branch of the United States, except in the course of legal proceedings to which the United States is a party, or for the purpose of securing compliance with this Final Judgment, or as otherwise required by law. If at the time information or documents are furnished by a defendant to plaintiff, defendant represents and identifies in writing the material in any such information or documents to which a claim of protection may be asserted under Rule 26(c)(7) of the Federal Rules of Civil Procedure, and defendant marks each pertinent page of such material, "Subject to claim of protection under Rule 26(c)(7) of the Federal Rules of Civil Procedure," then 10 days notice shall be given by plaintiff to defendant prior to divulging such material in any legal proceeding (other than a Grand Jury proceeding) to which defendant is not a party.

VIII

Jurisdiction is retained for the purpose of enabling either of the parties to this Final Judgment to apply to this Court at any time for such further orders and directions as may be necessary or appropriate for the construction or carrying out of this Final Judgment or for the modification of any of the provisions herein, and for the enforcement of compliance therewith and punishment of any violation of any of the provisions contained herein.

IX

The entry of this Final Judgment is in the public interest.

Dated this — day of ———, 1980.

United States District Judge.

Appendix A

To: Shippers, Receivers, Transportation Brokers, and Truckers.

On February 18, 1977, the Department of Justice filed a civil antitrust action under Section 1 of the Sherman Act, *United States v. Texas Citrus and Vegetable Growers and Shippers Association*, alleging that the Association combined to fix, stabilize and maintain the rates paid for the interstate transportation of fresh produce by motor carriers from the Lower Rio Grande Valley. Prior to the taking of any testimony and without admission by any party in respect to any issue, and without any finding by the Court that defendant violated any antitrust law of the United States, the Association consented to the entry of a Final Judgment terminating the law suit. The court found that the settlement was in the public interest and entered a Final Judgment on ——— 1980. A copy of that Final Judgment is available for inspection at the Offices of the Association.

We are informing all interested parties that any and all rate schedules heretofore adopted, published, distributed or recommended by Texas Citrus and Vegetable Growers and Shippers, and its membership, are null and void.

United States District Court for the Southern District of Texas; Brownsville Division

United States of America, Plaintiff, v. *Texas Citrus and Vegetable Growers and Shippers*, Defendant. [Civil No. B-77-41].

Filed: June 12, 1980.

Competitive Impact Statement

Pursuant to Section 2(b) of the Antitrust Procedures and Penalties Act (15 U.S.C. § 16(b)), the United States of America hereby files this Competitive Impact Statement relating to the proposed Final Judgment submitted for entry in this civil antitrust proceeding.

I

Nature and Purpose of the Proceeding

On February 18, 1977, the United States filed a Complaint under Section 4 of the Sherman Act (15 U.S.C. § 4), alleging that beginning at least as early as 1969 and continuing until the action was filed, Texas Citrus and Vegetable Growers and Shippers (TCVGS) and the Greater Texas Motor Transportation Broker Association (GTMTBA) and co-conspirators had engaged in a combination and conspiracy to fix, stabilize, and maintain the rates to be paid for the interstate truck transportation of fresh produce from the Rio Grande Valley of Texas, in violation of Section 1 of the Sherman Act (15 U.S.C. § 1). The Complaint sought an adjudication that the defendants had been engaged in an unlawful conspiracy in violation of Section 1 of the Sherman Act (15 U.S.C. § 1) and an injunction prohibiting its continuance or recurrence.

Entry by the Court of the proposed Final Judgment will terminate this action against TCVGS. The Court will retain jurisdiction over the matter for any further proceedings which might be required to interpret, modify, or enforce the Final Judgment, or to punish violations of any of its provisions.

II

Procedural Developments

The Final Judgment will terminate this action against defendant TCVGS. The United States has filed a motion to dismiss GTMTBA from the action at the time the Final Judgment was filed with the Court.

As alleged in the Complaint, GTMTBA was an unincorporated association organized in 1973 in Pharr, Texas, the members of which were in the business of providing motor transportation broker services. GMTBA has ceased to function and exist as an organizational entity. This fact was established after filing of the government action. The motion to dismiss GTMTBA from the government suit is consistent with the action in a parallel private suit *Ventu v. Texas Citrus and Vegetable Growers and Shippers, et al.*, Civil Action No. B-77-124, which was filed after the government's case.

III

Description of the Practices Involving in the Alleged Violation

Defendant TCVGS is a nonprofit association organized and located in Texas. The regular membership of TCVGS is comprised of companies engaged in the car lot and truck lot sale and shipment of fresh produce from Texas. Many TCVGS members own and/or lease acreage used for crop production which is ultimately sold and shipped. Some TCVGS members only sell and ship fresh produce. Texas ranks third among the states in the production of fresh market vegetables and melons and citrus fruits. The bulk of the fresh market vegetables and melons, and almost all the citrus fruits produced in Texas are grown and shipped from the lower Rio Grande Valley—an area approximated by Cameron, Hidalgo, Starr and Willacy Counties. The value of shipments of fresh produce from the lower Rio Grande Valley in 1975 were estimated to exceed $125 million. The TCVGS membership includes virtually all the companies selling and shipping fresh produce from the lower Rio Grande Valley, and TCVGS members account for the bulk of fresh produce sales and shipments.

The Complaint alleges that TCVGS engaged in a conspiracy to fix, stabilize and maintain the rates for the interstate truck transportation of fresh produce from the Rio Grande Valley. The conspiracy involved meetings, discussions and agreements among officials and other representatives of TCVGS and co-conspirators concerning the rates to be paid for transporting fresh produce from the Rio Grande Valley to destinations throughout the United States, and the approval and publication of schedules of rates reflecting the results of such discussions and agreements.

According to the Complaint, the conspiracy had the following effects: (a) rates for the interstate transportation of fresh produce by motor carrier from the lower Rio Grande Valley were fixed and maintained at artificial and non-competitive levels; (b) competition in the market for motor carrier services was restrained; and (c) shippers, motor carriers, and receivers of fresh produce from the lower Rio Grande Valley were deprived of the benefits of free and open competition.

IV

Explanation of the Proposed Consent Judgment

The United States and TCVGS have agreed that a Final Judgment in the form negotiated by the parties may be entered by the Court at any time after compliance with the Antitrust Procedures and Penalties Act, provided the plaintiff has not withdrawn its consent. The Stipulation provides that there has been no admission with respect to law or fact. Under the provisions of Section 2(e) of the Antitrust Procedures and Penalties Act, entry of the Judgment is conditioned upon a determination by the Court that it is in the public interest.

A. *Prohibited Conduct*

The proposed Judgment enjoins TCVGS from entering into, adhering to, maintaining

or furthering any agreement, understanding, plan or program with any person to fix, determine, maintain or stabilize rates paid or to be offered to motor carriers. The defendant is further restrained from discussing, approving, publishing, distributing, or recommending any schedule of rates for motor carrier transportation. The proposed Judgment also prohibits TCVGS from advocating, suggesting, or compelling or influencing any member or other person to use any particular motor carrier transportation rate. Nothing in the proposed Final Judgment, however, would operate to prevent TCVGS from attempting to influence the enactment, modification or repeal of any legislation or regulations relating to the transportation of fresh produce.

B. *Scope of the Proposed Judgment*

The Final Judgment applies perpetually to TCVGS as well as to its successors and assigns, directors, officers, agents, and employees. It also applies to all persons, including its members, in active concert or participation with TCVGS, who receive actual notice of the Final Judgment.

C. *Other Relief*

In addition to the requirement that defendant notify its officers, directors, and members by distributing copies of the Final Judgment to them after its entry, TCVGS must provide its members with a prescribed written notice in sufficient quantities, and with instructions that the members redistribute the notice to truckers with whom they do business. The notice advises recipients of the nature of the case brought against TCVGS, the fact of entry of the Final Judgment, and that its terms require that all rate schedules adopted, published, distributed or recommended by TCVGS or its membership are null and void.

D. *Effect of the Proposed Judgment*

The terms of the Judgment are designed to insure that (1) TCVGS and its membership will not participate in or sanction any activities connected with the formulation of and adherence to truck rates for transporting fresh produce from Texas, and (2) TCVGS and its membership will refrain from any involvement in the formulation, distribution, or adherence to any schedule of rates or other consensus rate or rates for truck transportation. Compliance with the proposed Judgment will promote the competitive determination of rates for the truck transportation of fresh produce from Texas among shippers, receivers and truckers.

V

Alternative to the Proposed Final Judgment

The alternative to the proposed Final Judgment would be a full trial of the case on the merits. In the view of the Department of Justice, disposition of the lawsuit without further litigation is appropriate since the proposed Final Judgment provides the relief as to TCVGS that the United States sought in its Complaint.

VI

Remedies Available to Private Litigants

Section 4 of the Clayton Act (15 U.S.C. § 15) provides that any person who has been injured as a result of conduct prohibited by the antitrust laws may bring suit in federal court to recover three times the damages suffered, as well as costs and reasonable attorney fees. A private action has been filed against TCVGS in the Southern District of Texas alleging violation of the antitrust laws similar to that found in the United States' Complaint. Under the provisions of Section 5(a) of the Clayton Act (15 U.S.C. § 16(a)), this Final Judgment may not be used as *prima facie* evidence in any lawsuits which have been, or may be brought against the defendant.

VII

Procedures Available for Modification of the Proposed Final Judgment

As provided by the Antitrust Procedures and Penalties Act, any person wishing to comment upon the proposed Final Judgment may submit written comments to Charles R. McConachie, Chief, Dallas Office, Antitrust Division, U.S. Department of Justice, 1100 Commerce Street, Room 8C6, Dallas, Texas 75242, within the sixty (60) day period provided by the Act. These comments, and the Department's responses to them, will be filed with the Court and published in the Federal Register. All comments will be given due consideration by the Department of Justice, which remains free to withdraw its consent to the proposed Judgment at any time prior to its entry if we should determine that some modification of it is necessary.

VIII

Determinative Materials and Documents

No materials and documents of the type described in Section 2(b) of the Antitrust Procedures and Penalties Act (15 U.S.C. § 16(b)) were considered in formulating this proposed Judgment, and consequently, none are being filed.

Alan A. Pason,

Attorney, United States Department of Justice, Antitrust Division, 1100 Commerce Street, Room 8C6, Dallas, Texas 75242, (214) 767-8051

[FR Doc. 80-19536 Filed 6-27-80; 8:45 am]

BILLING CODE 4410-01-M

NATIONAL LABOR RELATIONS BOARD

Change in Regional Office Boundaries

As there is no longer a staff imbalance in the Chicago and Indianapolis Regional Offices of the National Labor Relations Board, all cases filed on or after July 14, 1980, arising in the Indiana counties of Porter, LaPorte, and St. Joseph will be processed by the Indianapolis Regional Office. Therefore, parties are requested to file such cases directly with the Indianapolis Regional Office beginning on July 14, 1980.

Dated: Washington, D.C., June 25, 1980.

By direction of the Board.

George A. Leet,

Associate Executive Secretary, National Labor Relations Board.

[FR Doc. 80-19655 Filed 6-27-80; 8:45 am]

BILLING CODE 7545-01-M

OFFICE OF MANAGEMENT AND BUDGET

Agency Forms Under Review

Background

June 15, 1980.

When executive departments and agencies propose public use forms, reporting, or recordkeeping requirements, the Office of Management and Budget (OMB) reviews and acts on those requirements under the Federal Reports Act (44 U.S.C. Chapter 35). Departments and agencies use a number of techniques including public hearings to consult with the public on significant reporting requirements before seeking OMB approval. OMB in carrying out its responsibility under the Act also considers comments on the forms and recordkeeping requirements that will affect the public.

List of Forms Under Review

Every Monday and Thursday OMB publishes a list of the agency forms received for review since the last list was published. The list has all the entries for one agency together and grouped into new forms, revisions, extensions, or reinstatements. Some forms listed as revisions may only have a change in the number of respondents or a reestimate of the time needed to fill them out rather than any change to the content of the form. The agency clearance officer can tell you the nature of any particular revision you are interested in. Each entry contains the following information:

The name and telephone number of the agency clearance officer (from whom a copy of the form and supporting documents is available):

The office of the agency issuing this form;

The title of the form;

The agency form number, if applicable;

How often the form must be filled out;

Who will be required or asked to report;

An estimate of the number of forms that will be filled out;

An estimate of the total number of hours needed to fill out the form; and

The name and telephone number of the person or office responsible for OMB review.

Reporting or recordkeeping requirements that appear to raise no significant issues are approved promptly. Our usual practice is not to take any action on proposed reporting requirements until at least ten working days after notice in the Federal Register but occasionally the public interest requires more rapid action.

Comments and Questions

Copies of the proposed forms and supporting documents may be obtained from the agency clearance officer whose name and telephone number appear under the agency name. The agency clearance officer will send you a copy of the proposed form, the request for clearance (SF83), supporting statement, instructions, transmittal letters, and other documents that are submitted to OMB for review. If you experience difficulty in obtaining the information you need in reasonable time, please advise the OMB reviewer to whom the report is assigned. Comments and questions about the items on this list should be directed to the OMB reviewer or office listed at the end of each entry.

If you anticipate commenting on a form but find that time to prepare will prevent you from submitting comments promptly, you should advise the reviewer of your intent as early as possible.

The timing and format of this notice have been changed to make the publication of the notice predictable and to give a clearer explanation of this process to the public. If you have comments and suggestions for further improvements to this notice, please send them to Jim J. Tozzi, Assistant Director for Regulatory and Information Policy, Office of Management and Budget, 726 Jackson Place, Northwest, Washington, D.C. 20503.

DEPARTMENT OF AGRICULTURE

Agency Clearance Officer—Richard J. Schrimper—447-6201

New Forms

Food and Nutrition Service
Program and budget summary statement
FNS-366
Annually
All State welfare agencies, 54 responses; 2,256 hours
Charles A. Ellett, 395-7340.

Revisions

Agricultural Marketing Service
Regulations and related reporting and recordkeeping requirements
On occasion
Meat Packers, Market Agencies & Dealers (livestock), 32,091 responses; 18,913 hours
Charles A. Ellett, 395-7340

DEPARTMENT OF COMMERCE

Agency Clearance Officer—Edward Michals—377-3627

New Forms

Industry and Trade Administration
Monthly report under qualified general license
S373.4
Monthly
Commercial Exporters; 360 responses; 180 hours
William T. Adams, 395-4814

Revisions

Bureau of the Census
Annual Survey of Manufacturers
MA-100 (MU) MA-100 (SU) MA-100 (S) MA-100 (B)
Annually
Sample of manufacturing establishments, 78,100 responses; 207,500 hours
Off. of Federal Statistical Policy & Standard, 673-7974

Reinstatements

Bureau of the Census
Current service trade report
B-500
Monthly
Service trades and professions, 79,200 responses; 6,336 hours
Off. of Federal Statistical Policy & Standard, 673,7974

Reinstatements

Industry and Trade Administration
Steel mill products shipments—1978
ITA-9030
Single time
Steel producers, 200 responses; 200 hours
William T. Adams, 395-4814

U.S. EDUCATION DEPARTMENT

Agency Clearance Officer—William A. Wooten—472-2655

New Forms

Guidance team training program forms
ED 785
Single time
Adults from community agencies and homes, 2,496 responses; 749 hours
Laverne V. Collins, 395-6880

DEPARTMENT OF ENERGY

Agency Clearance Officer—John Gross—633-9770

Revisions

Annual report for public utilities and licensees (Class C and D)
FERC 1-F
Annually
Jurisdictional Class C and D public utilities (elec.), 10 responses; 160 hours
Jefferson B. Hill, 395-7340
Annual report for natural gas companies Class C and DFERC 2-A
Annually
Jurisdictional nat. gas pipeline comps. (Class C and D), 24 responses; 720 hours
Jefferson B. Hill, 395-7340

DEPARTMENT OF HOUSING AND URBAN DEVELOPMENT

Agency Clearance Officer—Robert G. Masarsky-755-5184

New Forms

Policy development and research
Household interview for a study of housing condition and rehabilitation need
Single time
Households in Boston SMSA containing 1-4 units, 300 responses; 225 hours
Richard Sheppard, 395-6880

COMMUNITY SERVICES ADMINISTRATION

Agency Clearance Officer—Jack Stoehr—254-5300

Extensions

Certificate of applicant's attorney
CSA 393
Annually
CAP agencies, 500 responses; 125 hours
Arnold Strasser, 395-6880
Application for recognition of a community action agency
CSA-370
Annually
CAP agencies, 1,300 responses; 1,300 hours
Arnold Strasser, 395-6880
Administrative costs report
CSA-315D
On occasion
CAP agencies, 800 responses; 400 hours
Arnold Strasser, 395-6880
Grantee refunding certificate
CSA-395
On occasion
CAP agencies, 1,600 responses; 800 hours
Arnold Strasser, 395-6880
Application for recognition of a CAA attorney's certification
OEO-372
Annually
CAP agencies, 1,300 responses; 1,300 hours
Arnold Strasser, 395-6880

ENVIRONMENTAL PROTECTION AGENCY

Agency Clearance Officer—Henry F. Beal—755-2744

New Forms

Application for Federal assistance (EPA research, demonstration, and training programs)

EPA 5700-12
On occasion
Description not furnished by agency, 1,440 responses; 25,200 hours
Edward H. Clarke, 395-7340

Controlled trading survey
Single time
Environmental program managers, 1 response; 100 hours
Edward H. Clarke, 395-7340

Revisions

National pollutant discharge elimination system-discharge monitoring report
EPA 3320-1
Other (See SF-83)
NPDES permittees discharging to U.S. waters, 212,480 responses; 36,122 hours
Edward H. Clarke, 395-7340

PENSION BENEFIT GUARANTY CORPORATION

Agency Clearance Officer—Robert E. Geiger—254-4776

New Forms

Employer liability for a single employer plan termination
On occasion
Emp. who maintain termin. defined benefit pension plans, 100 responses; 2,400 hours
Arnold Strasser, 395-6880

RAILROAD RETIREMENT BOARD

Agency Clearance Officer—Pauline Lohens—312-751-4692

Revisions

Monitoring of student beneficiaries
G-311, G-315 and G-317
Annually
Student beneficiaries, 25,500 responses; 1,900 hours
Barbara F. Young, 395-6880

Request for medicare payment
G-740B
On occasion
R.R. Hospital Assn. and Physicians, 40,000 responses; 10,000 hours
Barbara F. Young, 395-6880

Request for medical payment
G-740
On occasion
Medicare claimant, 1,300,000 responses; 325,000 hours
Barbara F. Young, 395-6880

C. Louis Kincannon,
Acting Deputy Assistant Director for Reports Management.

[FR Doc. 80-19587 Filed 6-27-80; 8:45 am]
BILLING CODE 3110-01-M

RADIATION POLICY COUNCIL

[FRL 1528-3]

Inquiry on Low-Level Nuclear Disposal

SUMMARY: The U.S. Radiation Policy Council has established a Task Force to consider problems associated with the disposal of low-level radioactive waste. The following agencies are members of the Task Force: Department of Health and Human Services, Department of Energy, Environmental Protection Agency, Nuclear Regulatory Commission, Federal Emergency Management Agency, the Department of Transportation and the Department of Defense. The Department of Health and Human Services is chairing the Task Force. The Task Force is collecting public comments on issues relating to the disposal of low-level radioactive waste.

DATE: Comments should be received by July 24, 1980.

ADDRESS: Please submit comments to W. Emmett Barkley, Ph.D., Task Force Chairman, National Institutes of Health, Building 13, Room 2E45, Bethesda, MD 20205.

SUPPLEMENTARY INFORMATION: The Radiation Policy Council was created by Executive Order 12194, February 21, 1980 (45 FR, pages 12209-10, February 25, 1980). The principal purpose of the Council is to coordinate the formulation and implementation of Federal Radiation Protection Policies. In a notice of public meeting (45 FR, page 35055, May 23, 1980), the Council announced that low-level radioactive waste management is one of the first issues it will consider and invited public comment. The Task Force will review and evaluate all comments pertinent to the subject area as well as the comments received from the publication of this notice today. The Task Force on low-level radioactive waste has identified two objectives for its study. First, the Task Force will develop recommendations for Federal policy for improving coordination and implementation of Federal and non-Federal programs that have been established to obtain solutions to existing low-level radioactive waste disposal problems. Second, the Task Force will recommend Federal policy for disposal of low-level radioactive waste containing minimal activity for which alternative disposal methods to existing shallow land disposable practices may be acceptable for protecting the public health.

In accomplishing the plan of the Task Force, five specific agenda items have been identified: (1) the Task Force will identify the authorities, functions, activities and priorities of Federal and non-Federal programs pertaining to low-level radioactive waste management, (2) the Task Force will describe the interactions and liaison activities that have been established between these organizations, (3) the Task Force will indentify areas of duplication or areas where insufficient attention is being given, (4) the Task Force will characterize that portion of low-level radioactive waste containing minimal activity for which safe alternatives to shallow land disposal practice may be possible, (5) the Task Force will develop recommendations for improving agency coordination and suggesting alternative approaches to the current shallow land disposal option.

FOR FURTHER INFORMATION CONTACT: W. Emmett Barkley, Ph.D., Chairman, Task Force on Low-level Radioactive Waste, National Institutes of Health, Building 13, Room 2E45, Bethesda, MD 20205, (301) 496-1357.

Carl R. Gerber,
Director, Radiation Policy Council.

[FR Doc. 80-19517 Filed 6-27-80; 8:45 am]
BILLING CODE 5560-01-M

SECURITIES AND EXCHANGE COMMISSION

[Release No. 16926; (SR-AMEX-77-16); and (SR-PSE-77-28)]

American Stock Exchange, Inc. and Pacific Stock Exchange, Inc.; Order Approving Proposed Rule Changes

June 24, 1980.

In the Matter of American Stock Exchange, Inc., 86 Trinity Place, New York, NY 10006, and Pacific Stock Exchange, Inc., 618 South Spring Street, Los Angeles, CA 90014.

On June 24, 1977 and September 16, 1977, the American and Pacific Stock Exchanges, respectively, filed with the Commission, pursuant to Section 19(b)(1) of the Securities Exchange Act of 1934, 15 U.S.C. 78s(b)(1) (the "Act") and Rule 19b-4 thereunder, copies of proposed rule changes which will amend their "reportable position requirements," changing the present reporting threshold from 100 contracts of the same option class to 200 contracts on the same side of the market in the same underlying security. The two filings are substantively identical.

Notice of the proposed rule changes together with the terms of substance of the proposed rule changes was given by publication of Commission Releases (Securities Exchange Act Releases No. 34-14025, October 4, 1977 (Amex) and

34-14024, October 4, 1977 (PSE)) and by publication in the Federal Register (42 FR 37262, July 20, 1977 (Amex) and 42 FR 54971, October 12, 1977 (PSE)). All written statements with respect to the proposed rule changes which were filed with the Commission and all written communications relating to the proposed rule changes between the Commission and any person were considered and (with the exception of those statements or communications which may be withheld from the public in accordance with the provisions of 5 U.S.C. § 552) were made available to the public at the Commission's Public Reference Room.

The Commission finds that the proposed rule changes are consistent with the requirements of the Act and the rules and regulations thereunder applicable to national securities exchanges and in particular, the requirements of Section 6, and rules and regulations thereunder.

It is therefore ordered, pursuant to Section 19(b)(2) of the Act, that the above-mentioned proposed rule changes be, and they hereby are, approved.

For the Commission, by the Division of Market Regulation pursuant to the delegated authority.

George A. Fitzsimmons,

Secretary.

[FR Doc. 80-19567 Filed 6-27-80; 8:45 am]

BILLING CODE 8010-01-M

[Release No. 16927; (SR-CBOE-77-17); and (SR-PHLX-80-17)]

Chicago Board Options Exchange, Inc. and Philadelphia Stock Exchange, Inc., Filing of Proposed Rule Change and Order Approving Proposed Rule Change

June 24, 1980.

In the Matter of Chicago Board Options Exchange, Inc., LaSalle at Jackson, Chicago, IL 60604, and Philadelphia Stock Exchange, Inc., 17th & Exchange Place, Philadelphia, PA 19103.

Pursuant to Section 19(b)(1) of the Securities Exchange Act of 1934, 15 U.S.C. 78s(b)(1) (the "Act"), notice is hereby given that on May 11, 1979, the Chicago Board Options Exchange, Incorporated (CBOE) filed with the Commission copies of an amendment to a proposed rule change which would amend its "reportable position requirement," changing the present reporting threshold from 100 contracts of the same option class to 200 contracts on the same side of the market in the same underlying security.[1] Notice is also given that on June 20, 1980, the Philadelphia Stock Exchange, Incorporated (Phlx) filed a substantively identical proposed rule change, raising its reporting threshold from 100 contracts of the same options class to 200 contracts on the same side of the market for the same underlying security.

Interested persons are invited to submit written data, views and arguments concerning the submission within 21 days from the date of this publication. Persons desiring to make written comments should file six copies thereof with the Secretary of the Commission, Securities and Exchange Commission, 500 North Capitol Street, Washington, D.C. 20549. Reference should be made to File Nos. SR-CBOE-77-17 and SR-PHLX-80-17.

Copies of the submissions, all subsequent amendments, all written statements with respect to the proposed rule changes which are filed with the Commission, and of all written communications relating to the proposed rule changes between the Commission and any person, other than those which may be withheld from the public in accordance with the provisions of 5 U.S.C. § 552, will be available for inspection and copying at the Commission's Public Reference Room, 1100 L Street, N.W., Washington, D.C.

The Commission finds that the proposed rule changes are consistent with the requirements of the act and the rules and regulations of the Act and the rules and regulations thereunder applicable to national securities exchanges and in particular, the requirements of Section 6, and the rules and regulations thereunder.

The Commission finds good cause for approving the proposed rule changes prior to the thirtieth day after the date of publication of notice of filing thereof, in that the original proposed rule change of the CBOE was previously noticed and this Amendment merely makes the CBOE filing consistent with the proposed rule changes of the dother options exchanges, which have been previously noticed and which are also being approved today.[2] The Phlx filing is being similarly treated because it also is in substance identical to the proposed rule changes of the other options exchanges. As a result of these rule changes, the same reporting requirements will apply regardless of the exchange on which an option is traded, and the Commission desires this change to occur contemporaneously. Accelerated approval of the CBOE and Phlx rule changes will permit implementation by all four options exchanges at the same time, without detriment to any party or the investing public.

It is therefore ordered, pursuant to Section 19(b)(2) of the Act, that the proposed rule change referenced above be, and they thereby are, approved.

For the Commissison, by the Division of Market Regulation pursuant to delegated authority.

George A. Fitzsimmons,

Secretary.

[FR Doc. 80-19568 Filed 6-27-80; 8:45 am]

BILLING CODE 8010-01-M

[1] The proposed CBOE rule change was originally filed on September 12, 1977, and it would have raised the threshold to 400 contracts. *See*, Securities Exchange Act Release No. 14023, October 4, 1977.

[2] *See*, Release No. 16926, June 24, 1980.

[Release No. 6216, (18-72)]

Morrison & Foerster Retirement Plan; Filing of Application Pursuant to Section 3(a)(2) of the Securities Act of 1933 for an Order Exempting from the Provisions of Section 5 of the Act Interests or participations Issued in Connection with the Morrison & Foerster Retirement Plan

June 23, 1980.

Notice is hereby given that the law firm of Morrison & Foerster (the "Applicant" or the "Firm"), One Market Plaza, Spear Street Tower, San Francisco, CA 94105, a California partnership has, by letter dated February 20, 1980, applied for an exemption from the registration requirements of the Securities Act of 1933 (the "Act") for any participations or interests issued in connection with the Morrison & Foerster Retirement Plan (the "Plan"). All interested persons are referred to that document which is on file with the Commission for the facts and representations contained therein, which are summarized below.

I. Introduction

The plan covers only partners in the Firm. All partners enter the plan on the date they become partners. At the present time there are 58 participants in the Plan.

Applicant states that the Plan is of a type, commonly referred to as a "Keogh" or "H.R. 10" Plan, which covers persons (in this case the Firm's partners) who are "employees" within the meaning of Section 401(c)(1) of the Internal revenue Code of 1954 as amended ("Code"), and therefore, is excepted from the exemption provided by Section 3(a)(2) of the Act for interests or participations in employee benefit plans of corporate employers. Therefore, even though the Plan is qualified under Section 401 of the Code, the exemption provided by Section 3(a)(2) is inapplicable to the

interests in the Plan, absent an order of the Commission.

In relevant part, Section 3(a)(2) provides that the Commission by rules and regulations or order, may exempt from the provisions of Section 5 of the Act any interest or participations issued in connection with a pension or profit-sharing plan which covers employees, some or all of whom are employees within the meaning of Section 401(c)(1) of the Code, if and to the extent that the Commission determines this to be necessary or appropriate in the public interest and consistent with the protection of investors and the purposes fairly intended by the policy and provisions of the Act.

The Plan has been determined by the United States Internal Revenue Service to be a qualified plan under Section 401(a) of the Code.

II. Description and Administration of the Plan

Administration of the Plan is in the following persons: the Management Committee of the Firm; the Benefits Committee appointed by the Management Committee of the Applicant (the "Plan Committee"); the Trustees of Trust A, all of whom are members of the Firm; and the Custodian, Crocker National Bank. The Management Committee has the duty and authority to appoint and remove trustees and members of the Plan Committee. The Plan Committee interprets the Plan, administers the Plan in separate accounts for each participant and makes decisions with respect to distribution of Plan funds within the terms of the Plan. The Trustees of Trust A have responsibility for the investment of the trust funds upon the instructions of the Plan Committee and instructions from an investment manager appointed by the Plan Committee. The current investment manager, Harris, Bretall & McEldowney, Inc., is registered under the Investment Advisers Act of 1940.

The Plan provides that for each Plan Year the partners shall contribute an amount equal to six percent (6%) of the partner's annual compensation plus seven percent (7%) of the partner's annual compensation in excess of the Social Security taxable wage base for the year. In no event shall any contribution for a participating partner exceed $7,500 for any year or be made with respect to compensation in excess of $100,000 for a Plan Year. No contribution shall be made with respect to the aggregate compensation paid to or for any partner owning more than ten percent (10%) of either the capital or profits interest of the Firm for any Plan Year. (There are presently no partners in this category.)

Each participant may make voluntary contributions to the Plan of an amount up to ten percent (10%) of his or her aggregate compensation for the Plan Year for which the contribution is made. Voluntary contributions may be withdrawn in whole or in part, but only at such times as the Plan Committee may prescribe. No part of any such withdrawals shall be from income while a member of the partnership.

Required contributions are invested by the Plan Committee in a fund designed to provide for relative safety of principal. The fund may consist of bank certificates of deposit, savings accounts, money market instruments, Treasury bills, insurance company contracts, a pooled fixed income fund such as the fixed income fund of the American Bar Retirement Association Master Partnership Trust, or similar investments. Voluntary contributions may be divided by the partner between the fixed income fund and an equity fund managed by the investment manager. All assets of the Trust are held by the Custodian.

The Applicant contends that if the Firm were a corporation, interests and participations issued in connection with the Plan would be exempt from registration under Section 3(a)(2) of the Act, because no person who would be an "employee" within the meaning of Section 401(c)(1) of the Code would participate in the Plan. Only because the partners are employees within the meaning of Section 401(c)(1) of the Code is registration under the Act required. The Applicant submits that the mere fact that the Firm conducts its business as a partnership rather than as a corporation should not result in a requirement that interests in the Plan be registered under the Act.

The Applicant further submits that the characteristics of the Plan are essentially typical of those maintained by many single corporate employers and that the legislative history of the relevant language in Section 3(a)(2) of the Act does not suggest any intent on the part of Congress that interests issued in connection with single-employeer Keogh plans necessarily should be registered under the Act. Rather, the intent of Congress in excluding from the exemption plans in which self-employed persons were participants was to prevent the sale without registration of interests or participations in commingled or collective Keogh funds offered by financial institutions to self-employed persons who lack the sophistication in the securities field to protect themselves and their employees. The Applicant argues that the Plan is distinguishable from such funds. The Applicant states that the Plan covers employees of a single firm and is not a uniform prototype plan of a type designed to be marketed by a sponsoring financial institution or promoter to numerous unrelated self-employed persons. The Applicant argues that the Plan does not present the risks associated with the sale of interests or participations with which Congress was primarily concerned when it drafted Section 3(a)(2).

The Applicant further submits that the provision permitting the Commission to issue an order of exemption pursuant to Section 3(a)(2) of the Act was included in order to make available an exemption for partnership retirement plans such as the Firm's where the plan and the entity involved are comparable to corporate plans which are exempted by the same Section of the Act.

The Applicant states that the Firm is engaged in providing legal services which necessarily involve sophisticated and complex financial matters and, for that reason as well as the extensive administrative control over the Plan maintained by the Firm, is able to represent adequately its own interests and those of its partners. The Applicant represents that no solicitation of voluntary contributions has or will be made, although a simple notice has been supplied to all participants stating that any participant may make voluntary contributions.

The Firm does not request any exemption from the provisions of Section 17 of the Act, any other applicable anti-fraud provisions contained in the securities laws or any rules adopted pursuant thereto.

For all of the foregoing reasons, Applicant believes that the Commission should issue an order finding that an exemption from the provisions of Section 5 of the Act for interests or participations issued in connection with the Plan is appropriate in the public interest and consistent with the protection of investors and the purposes fairly intended by the policy and provisions of the Act.

Notice is further given that any interested person may, not later than July 18, 1980, at 5:30 p.m., submit to the Commission in writing a request for a hearing on the matter accompanied by a statement as to the nature of his or her interest, the reasons for such request, and the issue, if any, of fact or law proposed to be controverted, or he or she may request that he or she be notified if the Commission should order a hearing thereon. Any such

communication shall be addressed to the Secretary, Securities and Exchange Commission, Washington, D.C. 20549. A copy of such request shall be served personally or by mail upon the Applicant at the address stated above. Proof of such service (by affidavit or, in the case of an attorney-at-law, by certificate) shall be filed contemporaneously with the request. An order disposing of the matter will be issued as of course following July 18, 1980 unless the Commission thereafter orders a hearing upon request, or upon the Commission's own motion. Persons who request a hearing, or advice as to whether a hearing is ordered, will receive any notices or orders issued in this matter, including the date of the hearing (if ordered) and any postponements thereof.

For the Commission, by the Division of Investment Management, pursuant to delegated authority.

George A. Fitzsimmons,

Secretary.

[FR Doc. 80-19560 Filed 6-27-80; 8:45 am]

BILLING CODE 8010-01-M

[Release No. 21638; (70-6470)]

The Narragansett Electric Co.; Proposed Issuance and Sale of First Mortgage Bonds

June 24, 1980.

Notice is hereby given that the Narragansett Electric Company ("Narragansett"), 280 Melrose Street, Providence, Rhode Island 02901, a subsidiary of New England Electric System ("NEES"), a registered holding company, has filed an application-declaration with this Commission pursuant to the Public Utility Holding Company Act of 1935 ("Act"), designating Sections 6(a) and 7 of the Act and Rule 50 promulgated thereunder as applicable to the proposed transaction. All interested persons are referred to the application-declaration, which is summarized below, for a complete statement of the proposed transaction.

Narragansett proposes to issue and sell not exceeding $20,000,000 principal amount of First Mortgage Bonds ("Bonds"), to bear interest at such rate and to be issued at such price as shall be determined by competitive bidding. The terms and conditions relating to bids provide that each bid shall specify the interest rate (which shall be a multiple of ⅛ of 1%) to be borne by the Series M Bonds, and the price to be paid to Narragansett, which shall be not less than 98% of the principal amount nor more than 101¾%. The Series M Bonds will bear interest from the date on which bonds of the series are first certified. Interest will be paid semi-annually on February 1 and August 1. Narragansett will publicly invite sealed, written bids for the purchase of the Series M Bonds at least six days prior to entering into any contract or agreement for the issuance or sale.

The Series M Bonds will be issued under a First Mortgage Indenture and Deed of Trust dated as of September 1, 1944, as amended and supplemented, and will be secured, along with all other bonds issued under the Indenture, by a first mortgage on substantially all properties now owned and, to the extent permitted by law, thereafter acquired by Narragansett, except for the properties specifically excepted from the lien of the Indenture.

The proceeds from the sale of Series M Bonds, estimated at approximately $20,000,000 will be applied (a) to the payment in part of short-term debt incurred to retire $22,750,000 of Series K Bonds, 10½%, maturing August 1, 1980, (b) retirement of short-term indebtedness incurred or to be incurred for capitalizable expenditures, (c) to pay for such expenditures or to reimburse the treasury therefor, or (d) to any combination thereof.

The fees and expenses to be incurred in connection with the proposed transactions are estimated at $200,000, including $50,000 for printing costs, $25,000 for trustee fees, $14,000 for accountant's fees and $80,000 for services performed at cost by New England Power Service Company, and affiliate.

The Division of Public Utilities and Carriers, Department of Business Regulation, of the State of Rhode Island has jurisdiction over the proposed transactions. It is stated that no state or federal commission, other than this Commission, has jurisdiction over the proposed transactions.

Notice is further given that any interested person may not later than July 18, 1980, request in writing that a hearing be held on such matter, stating the nature of his interest, and the reasons for such request, and the issues of fact or law raised by said application-declaration which he desires to controvert; or he may request that he be notified if the Commission should order a hearing thereon. Any such request should be addressed: Secretary, Securities and Exchange Commission, Washington, D.C. 20549. A copy of such request should be served personally or by mail upon the applicant-declarant at the above-stated address, and proof of service (by affidavit, or in case of an attorney at law, by certificate) should be filed with the request. At any time after said date the application-declaration, as filed or as it may be amended, may be granted and permitted to become effective as provided in Rules 20(a) and 100 thereof or take such other action as it may deem appropriate. Persons who request a hearing or advice as to whether a hearing is ordered will receive any notices and orders issued in this matter, including the date of the hearing (if ordered) and any postponements thereof.

For the Commission, by the Division of Corporate Regulation, pursuant to delegated authority.

George A. Fitzsimmons,

Secretary.

[FR Doc. 80-19561 Filed 6-27-80; 8:45 am]

BILLING CODE 8010-01-M

[Release No. 6215; (18-75)]

Nyemaster, Goode, McLaughlin, Emery & O'Brien Partnership Employees Profit Sharing Plan; Filing of Application Pursuant to Section 3(a)(2) of the Act for an Order Exempting From the Provisions of Section 5 of the Act Interests or Participations Issued in Connection With the Nyemaster, Goode, McLaughlin, Emery & O'Brien Partnership Employees Profit Sharing Plan

June 23, 1980.

Notice is hereby given that the law firm of Nyemaster, Goode, McLaughlin, Emery & O'Brien (the "Applicant" or "Firm" hereinafter), Tenth floor Hubbell Building, Des Moines, Iowa 50309, an Iowa partnership, has by letter dated March 20, 1980, applied for an exemption from the registration requirements of the Securities Act of 1933 ("Act") for any participations or interests issued in connection with the Nyemaster, Goode, McLaughlin, Emery & O'Brien Partnership Employees Profit Sharing Plan ("Plan"). All interested persons are referred to that document, which is on file with the Commission, for the facts and representations contained therein, which are summarized below.

I. Introduction

The Plan covers all employees and partners, other than owner-employees as defined in Section 401(c)(3) of the Internal Revenue Code of 1954 as amended ("Code"), who have reached age 25, and completed 3 years of service. Participation in the Plan is automatic and each person becomes a Plan participatant on July 1 or January 1 following his or her satisfaction of the eligibility requirements.

Applicant states that the Plan is operated exclusively for the benefit of Plan participants and their beneficiaries. Applicant states further that participation in the Plan ends upon a participant's termination of employment for whatever reason or upon his or her becoming an owner-employee of the Firm. There are presently 28 Plan participants.

Applicant represents that the Plan is a profit-sharing plan of the type commonly referred to as a "Keogh" plan, which covers persons (in this case, certain partners of the Firm) who are "employees" within the meaning of Section 401(c)(1) of the Code. Therefore, even though the Plan is qualified under Section 401 of the Code, the exemption provided by Section 3(a)(2) of the Act is inapplicable to interests in the Plan, absent an order of the Commission.

In relevant part, Section 3(a)(2) of the Act provides that the Commission may exempt from the provisions of Section 5 of the Act any interests or participations issued in connection with the profit-sharing plan which covers employees, some or all of whom are employees within the meaning of Section 401(c)(1) of the Code, if and to the extent that the Commission determines this to be necessary or appropriate in the public interest and consistent with the protection of investors and the purposes fairly intended by the policy and the provisions of the Act.

II. Description and Administration of the Plan

Applicant states that the Plan was originally adopted on December 9, 1975, and made effective January 1, 1975. On March 14, 1978, the Plan was amended and restated in its entirety, effective January 1, 1978, to comply with final regulations issued under the Code and the Employee Retirement Income Security Act of 1974 ("ERISA") and to make certain other changes in the operational format of the Plan. On July 11, 1978, the Internal Revenue Service issued a favorable determination letter as to the qualified status of the restated Plan, and its related trust, under Sections 401(a) and 501(a) of the Code. On June 22, 1979, a First Amendment to the amended and restated Plan was adopted, the purpose of which was to comply with final regulations regarding "Hours of Service" and "Joint and Survivor Annuities" adopted by the Internal Revenue Service and Department of Labor.

The Plan is a proft-sharing plan, the assets of which are administered through a Trust Fund by at least five Trustees ("Trustees"), all of whom are appointed by the Applicant and serve at the Applicant's pleasure. Currently approximately one-half of the trust fund is invested under a Group Annuity Contract with Bankers Life Company, Des Moines, Iowa which consists of fixed income investments such as mortgages and bonds; and one-half under a Repurchase Agreement with Central National Bank and Trust Company, Des Moines, Iowa, which pays daily interest and is secured by long-term government securities.

Applicant states that the Plan is subject to the reporting, disclosure, participation, vesting, and fiduciary responsibility requirements of Title I of ERISA.

There are currently five Trustees, all of whom are partners of the Firm and Plan participants. The Trustees have the authority to control, manage and invest the assets of the Trust Fund, except with respect to a Plan asset under the control or direction of a properly appointed Investment Manager or with respect to a Plan asset subject to Employer, Participant or Advisory Committee direction of investment. Currently, no investment Manager has been appointed and there are no Plan assets subject to Employer or Advisory Committee direction of investment. However, the Plan provides that unless otherwise directed by a Plan participant, the Trustee will deposit all contributions by or on behalf of such participant under the Group Annuity Contract between the Trustee and Bankers Life Company, so long as it remains in effect.

The Plan has an Advisory Committee consisting of five members, all of whom are appointed by the Firm and serve at the Applicant's pleasure. The Advisory Committee has over-all responsibility and authority for the administration of the Plan, including the interpretation of Plan provisions, the establishment and enforcement of Plan rules and regulations, the determination and authorization of Plan benefits, and the payment of proper expenses of Plan administration. The Applicant is the Plan Administrator and has the responsibilities assigned by ERISA to the Administrator of an employee benefit plan.

Applicant states that all employer contributions to the Plan are made by the Firm out of its net profits. In addition, voluntary contributions by participants are permitted, but not required. Participant voluntary contributions to the Plan may be made at any time and in any amount or amounts which, in the aggregate for each plan year, do not exceed 10% of his or her compensation (which includes salary, bonuses, overtime payments, and, in the case of a partner, his or her distributive share of the Firm's net income) for that year. Catch-up voluntary contributions are permitted based upon plan years during which a participant failed to make the maximum allowable voluntary contribution.

Applicant states that an employer account is maintained under the Plan on behalf of each Plan participant, to which the Applicant's contributions to the Trust Fund on his or her behalf are credited. As of the close of each plan year, the Firm contributes to the Trust Fund, an amount equal to 4% of its current net profits plus such additional amount from its current net profits as the Firm may, from time to time, deem advisable; provided, however, in the absence of a determination, the Firm shall contribute an additional amount which, when added to 4% of its current net profits, will produce a maximum deductible contribution on behalf of the partner who is not an owner-employee with the highest Earned Income during the taxable year. Each annual Applicant contribution is first allocated and credited to each participant's account in an amount equal to that percent of the Firm contribution which is in the same proportion that each participant's compensation in excess of $17,700 for the plan year bears to the total compensation in excess of $17,700 of all participants for the plan year; provided, however, the maximum amount of the Applicant's annual contribution allocated to the account of a participant for any plan year will not exceed 7% of his or her compensation in excess of $17,700 for that plan year. The balance, if any, of the Applicant's annual contribution in excess of the amount allocated as indicated above, is allocated to each Plan participant's account in the same proportion that the ratio of his or her compensation for the plan year bears to the compensation of all participants for the plan year. Applicant states that its contributions are commingled in the Trust Fund, the earnings and losses of which are allocated proportionately to each employer account unless any participant has directed that all or any portion of his or her account balance be invested in a specific asset, in which event the earnings relating to that specific investment are allocated to the directing participant's account.

Applicant states that a voluntary account is maintained on behalf of each Plan participant to which his or her voluntary contributions, if any, to the Trust Fund, are credited. Voluntary contributions are commingled with other assets of the Plan and a participant's voluntary account shares

proportionately in the earnings and losses of the Trust Fund unless, as described above, the participant directs otherwise. A participant is at all times 100% vested in his or her voluntary account in an amount not exceeding the lesser of (i) the aggregate of his or her voluntary contributions not previously withdrawn, or (ii) the balance in such account.

Applicant represents that it has provided and will continue to provide participants with adequate disclosure of all material facts prior to the making of voluntary contributions. Such disclosure is accomplished by the distribution of Summary Plan Descriptions, summaries of material modifications, if any, to the Plan and Summary Annual Reports which include a summary of the investment performance of the Trust Fund. Each participant is provided with an annual statement of his or her employer account, his or her vested interest therein, and his or her voluntary account.

Applicant also represents that it has not distributed, and does not intend to distribute any type of promotional material relating to the Plan (other than material required to be distributed by ERISA) and has not solicited and does not intend to solicit voluntary contributions.

Applicant contends that were the Firm a corporation, rather than a partnership, interests or participants issued in connection with the Plan would be exempt from registration under Section 3(a)(2) of the Act, because no person who would be an "employee" within the meaning of Section 401(c)(1) of the Code would participate in the Plan. Applicant argues that the mere fact that it conducts its business as a partnership rather than as a corporation should not result in a requirement that interests in the Plan be registered under the Act.

Applicant suggests that Congress excepted interests and participations issued in connection with plans covering self-employed individuals from the express exemption provided by Section 3(a)(2) of the Act primarily out of concern over interests in commingled or collective Trust Funds which might be marketed by sponsoring financial institutions to self-employed persons unsophisticated in financial matters and that its Plan is not a master or prototype plan marketed to the public by a sponsoring financial institution. Applicant states that it is engaged in furnishing legal services of the type which necessarily involve financially sophisticated and complex matters, and for that reason, as well as the extensive administrative control over the Plan maintained by the Firm, the interests of the partners of the Firm who are plan participants, as well as the interests of all plan participants, are adequately protected.

For all of the foregoing reasons, Applicant believes that the Commission should issue an order finding that an exemption from the provisions of Section 5 of the Act for interest or participations issued in connection with the Plan is appropriate in the public interest and consistent with the protection of investors and the purposes fairly intended by the policy and provisions of the Act.

Notice is further given that any interested person may, not later than July 18, 1980 at 5:30 p.m., submit to the Commission in writing a request for a hearing on the matter accompanied by a statement as to the nature of his or her interest, the reason for such request, and the issue, if any, of fact or law proposed to be controverted, or he or she may request that he or she be notified if the Commission should order a hearing thereon. Any such communication shall be addressed to the Secretary, Securities and Exchange Commission, Washington, D.C. 20549. A copy of such request shall be served personally or by mail upon the Applicant at the address stated above. Proof of such service (by affidavit or, in the case of an attorney-at-law, by certificate) shall be filed contemporaneously with the request. An order disposing of the matter will be issued as of course following July 18, 1980 unless the Commission thereafter orders a hearing upon request, or upon the Commission's own motion. Persons who request a hearing, or advice as to whether a hearing is ordered, will receive any notices or orders issued in this matter, including the date of the hearing (if ordered) and any postponements thereof.

For the Commission, by the Division of Investment Management, pursuant to delegated authority.

George A. Fitzsimmons,

Secretary.

[FR Doc. 80-19559 Filed 6-27-80; 8:45 am]

BILLING CODE 8010-01-M

[Release No. 34-16919; File No. SR-CBOE-1980-16]

Chicago Board Options Exchange, Inc.; Self-Regulatory Organizations; Proposed Rule Change

Pursuant to Section 19(b)(1) of the Securities Exchange Act of 1934, 15 U.S.C. 78s(b)(1), as amended by Pub. L. No. 94-29, 16 (June 4, 1975), notice is hereby given that on June 9, 1980, the above-mentioned self-regulatory organization ("SRO") filed with the Securities and Exchange Commission proposed rule change as follows:

Text of Substance of the Proposed Rule Change

(Brackets indicate deletions; italics indicate new material)

Market Performance Committee

Rule 2.9. The Market Performance Committee shall consist of at least five members, all of whom shall be regularly engaged in business on the trading floor. The presence of a majority of the members of the Committee shall constitute a quorum for the transaction of business.

Obligation for Fair and Orderly Market

Rule 7.5. At the request of a Floor Broker who holds an order for a particular option contract, or before any crossing transaction is effected in accordance with Rule 6.74, or *whenever it is requested by a Floor Broker, or* whenever in the Board Broker's or Order Book Official's opinion the interests of a fair, orderly and competitive market are best served by such action, a Board Broker or Order Book Official shall call upon those Market-Makers with [Principal] Appointments [and, whenever it is requested or in his opinion it is needed, Supplemental Appointments] in that class of option contracts *and each Market-Maker who does not have such an appointment if a transaction has been effected for his account on that day in that class of option contracts* to make bids and/or offers that contribute to meeting the standards set forth in Rule 8.7. [To the extent practicable, and in a form prescribed by the Exchange, the Board Broker or Order Book Official shall keep a record of the responses of Market-Makers that provide or improve upon a market commensurate with these standards. If satisfactory responses are not forthcoming promptly,] The Board Broker or Order Book Official shall make a record of [this fact.] *Market-Makers who fail to respond to such request.* Copies of all records kept in accordance with this rule shall be forwarded to the Department of [Compliance] *Market Regulation.*

. . . Interpretations and Policies:

.01 (no change)

.02 In order to facilitate the call for Market-Makers, the Exchange shall maintain a current list of Market-Makers' Appointment with each Board Broker or Order Book Official.

.03 Every Floor Broker who represents a Market-Maker with an order in any options class shall, by public outcry at the post, indicate the identity of such Market-Maker at the

request of the Board Broker, Order Book Official or any member.

Registration of Market-Makers

Rule 8.2. *(a)* An applicant for registration as a Market-Maker shall file his application in writing with the [Secretary of the Exchange] Membership Department on such form or forms as the Exchange may prescribe. Applications shall be reviewed by the [Floor Procedure] *Membership* Committee, which shall consider an applicant's ability as demonstrated by his passing a [Market-Maker's *floor member's* examination prescribed by the Exchange, and such other factors as the [Floor Procedure] Committee deems appropriate. [Following the review of the Floor Procedure Committee, the application, together with the recommendation of the Floor Procedure Committee, shall be forwarded to the Membership Committee.] After reviewing the application [and the recommendation of the Floor Procedure Committee], the Membership Committee shall either approve or disapprove the applicant's registration as a Market-Maker. [Before a registration shall become effective, the Secretary, upon direction of the Membership Committee, shall post the name of applicant on the bulletin board on the floor of the Exchange for at least 3 business days.]

(b) The registration of any person as a Market-Maker may be suspended or terminated by the [Membership] *Floor procedure* Committee or [Floor Procedure] *Market Performance* Committee upon a determination that such person has failed to properly perform as a Market-Maker.

(c) Any member of prospective member adversely affected by a determination of the Membership Committee, [or] Floor Procedure Committee, *or Market Performance Committee* under this Rule may obtain a review thereof in accordance with the provisions of Chapter XIX.

Appointment of Market-Makers

Rule 8.3. (a) On a form or forms prescribed by the Exchange, a registered Market-Maker may apply for *an* [Principal] Appointment (having the obligations of Rule 8.7(b)) [and/or Supplemental Appointment (having the obligations of Rule 8.7(c))] in one or more classes of option contracts. From among those Market-Makers registered, the Floor Procedure Committee shall ordinarily make two or more [Principal] Appointments for each class of option contracts. [and may make one or more Supplemental Appointments for each class.] In making such appointments, the Committee shall given attention to (a) the preference of registrants; (b) the maintenance and enhancement of competition among Market-Makers in each class of option contracts; and (c) assuring that financial resources available to a Market-Maker enable him to satisfy the obligations set forth in Rule 8.7 with respect to each class of option contracts to which he is appointed. The Floor Procedure Committee may arrange two or more classes of option contracts into groupings based on, among other things, similar trading locations on the floor, and may make appointments to those groupings rather than to individual classes. The *Floor Procedure* Committee *or Market Performance Committee* may suspend ot terminate any appointment of a Market-Maker under this rule and may make additional appointments whenever, in [the] *either* Committee's judgment, the interests of a fair and orderly market are best served by such action.

(b) (no change)

(c) A member or prospective member adversely affected by a determination made by the Floor Procedure *or Market Performance Committee* under this Rule may obtain a review thereof in accordance with the provisions of Chapter XIX.

. . . Interpretations and Policies:

.01 (no change)

[.02 The Floor Procedure Committee will ordinarily assign each registered Market-Maker at least one Principal Appointment in addition to any Supplemental Appointments that may be assigned. A registered market-Maker may be granted only Supplemental Appointments upon a showing by him that:

(i) he is, or promptly after his being granted one or more Appointments will be, primarily engaged in the business of a Floor Broker on the Exchange floor (i.e., that he acts as Floor Broker in a majority of his trades, measured in terms of his contract volume); or

(ii) he is, or promptly after his being granted one or more Appointments will be, primarily engaged as a trader or broker on the Chicago Board of trade (i.e., that he acts as a broker or trader on the Chicago Board of Trade in a majority of his trades, measured in terms of his aggregate contract volume on the two exchanges); or

(iii) other circumstances exist which prevent him from undertaking the full-time Market-Maker obligations of a Principal Appointment.

The majority requirement in clauses (i) and (ii) will be applied realistically in light of the nature of option trading. It will not be necessary to meet the tests in each particular week, so long as they are met in the general course of a Market-Maker's business measured, for example, on a quarterly basis.]

Obligations of Market-Makers

Rule 8.7. (a) (no change)

(b) [Principal] Appointment. With respect to each class of option contracts for which he holds *an* [Principal] Appointment under Rule 8.3, a Market-Maker has a continuous obligation to engage, to a reasonable degree under the existing circumstances, in dealings for his own account when there exists, or it is reasonably anticipated that there will exist, a lack of price continuity, a temporary disparity between the supply of and demand for a particular option contract, or a temporary distortion of the price relationships between option contracts of the same class. Without limiting the foregoing, a Maket-Maker is expected to perform the following activities in the course of maintaining a fair and orderly market:

(i) (no change)

(ii) (no change)

(iii) (no change)

[(c) Supplemental Appointment. With respect to each class of option contracts for which he holds a Supplemental Appointment under Rule 8.3, a Market-Maker is expected to undertake the obligations specified in paragraph (b) of this Rule in response to a demand therefor from the Board Broker or Order Book Official that the performance of such obligations by other Market-Makers requires supplementation. Whenever a Market-Maker enters the trading crowd for a class of option contracts in which he holds a Supplemental Appointment in other than a floor brokerage capacity (whether voluntarily or as a result of a demand from a Board Broker or Order Book Official), he shall fulfill the obligations established by paragraph (b) of this Rule.]

[(d)] (c) In Classes of Option Contracts other than those to which appointed. With respect to classes of option contracts in which he *does not* hold[s neither a Principal nor Supplemental] *an* Appointment, a Market-Maker should not engage in transactions for an account in which he has an interest which are disproportionate in relation to, or in derogation of, the performance of his obligations as specified in paragraph[s] (b) [and (c)] of this Rule with respect to those classes of option contracts to which he does hold appointments. Whenever a Market-Maker enters the trading crowd for a class of option contracts in which he *does not* hold[s neither a Principal or Supplemental] *an*

Appointment in other than a floor brokerage capacity, he shall fulfill the obligations established by paragraph (b) of this Rule. *On a day on which a transaction in a non-appointed option class is effected for the account of a Market-Maker, such Market-Maker may be required to undertake the obligations specified in paragraph (b) of this Rule upon determination by the Board Broker or Order Book Official in accordance with Rule 7.5.* Furthermore, Market-Makers should not:

(i) Congregate in a particular class of option contracts; or

(ii) Individually or as a group, intentionally or unintentionally, dominate the market in option contracts of a particular class; or

(iii) Effect purchases or sales on the floor of the Exchange except in a reasonable and orderly manner.

. . . Interpretations and Policies:

.01 (no change)

.02 (no change)

.03. The Floor Procedure Committee has determined for purposes of Rule 8.7 (d) that, except for unusual circumstances, no more than 25% of a Market-Maker's trading activity in any quarter (measured in terms of contract volume) may be in classes of option contracts to which the Market-Maker holds neither a Principal nor Supplemental Appointment. Trading in nonappointed classes at the request of a Floor Official shall not be included in computing the 25% limitation. The Floor Procedure Committee may, in computing the percentage specified herein, assign a weighting factor based upon relative inactivity to one or more classes or series of option contracts.]

.03 [.04] The [Floor Procedure] *Executive* Committee has determined for purposes of Rule 8.7(b) that, except for unusual circumstances, at least [50%] *75%* of the trading activity in any quarter (measured in terms of contract volume) of a Market-Maker holding a*n* [Principal] Appointment shall [ordinarily] be in classes of option contracts to which his [Principal] Appointment extends. Temporarily undertaking the obligations of a*n* [Principal] Appointment with respect to non-[Principal] Appointment classes of option contracts at the request of a [Floor Official] *Board Broker or Order Book Official* shall not be deemed trading in non-[Principal] Appointment classes. *Moreover, for each quarter, except for unusual circumstances, a Market-Maker must execute in person and not through the use of orders either (a) 75% of his trading activity (measured in terms of contract volume), or (b) 20,000 contracts in those classes to which a Market-Maker holds an appointment.* The [Floor Procedure] *Market Performance* Committee may, in computing the percentage*s* specified herein, assign a weighting factor based upon relative inactivity to one or more classes or series of option contracts.

.04 [.05] The obligations of a Market-Maker with respect to those classes of option contracts to which he holds a*n* [Principal] Appointment shall take precedence over his other Market-Maker obligations.

Interest in Joint Accounts

Rule 8.9. (no change)

. . . Interpretations and Policies:

.01 (no change)

.02 (no change)

.03 (no change)

.04 The following formulae will be used in apportioning contract volume among participants in a joint account:

(a) (no change)

[(b) For the purposes of determining continued eligibility under rule 8.3.02(1) for Supplemental Appointment only, if a participant in the joint account also acts as a Floor Broker, contracts in any Market-Maker joint account in which said Floor Broker participates shall be assigned to him in accordance with the formula set forth in (a) above and shall be aggregated with contracts executed as a Market-Maker which are cleared through any individual trading account of such Floor Broker. If the number of contracts executed as a Floor Broker on a quarterly basis do not exceed the total number of contracts executed as a Market-Maker, such participant will be required to obtain a Principal Appointment.]

[(c)](*b*) For purposes of assessing position under Rule 4.11 and exercises under Rule 4.12, the following presumptions will apply (lacking any other information regarding "in-concert" activity):

(i) (no change)

(ii) (no change)

(iii) (no change)

.05 (no change)

.06 (no change)

SRO's Statement of Basis and Purpose

The basis and purpose of the foregoing proposed rule change is as follows:

On November 7, 1979, Douglas Scarff, the Director of the Division of Market Regulation of the Commission, sent a letter to Charles Henry, President of the Exchange, reporting the results of a Commission investigation of the trading operations of the Exchange and, among other things, recommending that the Exchange undertake a study of certain issues with respect to the manner in which the Exchange imposes market making obligations upon its Market-Makers. The proposed rules changes were adopted by the Exchange following the study.

Proposed Rule 2.9 was adopted for the purpose of creating a new standing committee of the Exchange, to be called the Market Performance Committee, which would have the responsibility for conducting evaluations of Market-Makers of the market making obligations prescribed in Exchange Rule 8.7. The responsibility for evaluating Market-Makers' performance is presently assigned to a subgroup of the Exchange's Floor Procedure Committee. Without in any way implying dissatisfaction with or criticism of the manner in which the Floor Procedure Committee has discharged its evaluation responsibilities, the Exchange believes that the establishment of a new committee appointed by the Board of Directors would communicate the Exchange's determination to have Market-Makers' performance conscientiously evaluated as well as the Board's desire to attract interested and experienced members to devote significant amounts of their time to the evaluation process. In addition to the adoption of proposed Rule 2.9, the Exchange's rules are proposed to be changed so as to reflect the establishment of the new Market Performance Committee. See the proposed changes to Rule 8.2(b), 8.2(c), 8.3(a), 8.3(c), and the last sentence of Rule 8.7.03.

The principal proposed change to Rule 7.5 was designed to prescribe, by rule, the requirement that every Market-Maker who does not have an appointment in a class of options who effects a transaction in his Market-Maker account in that class of options on a given day must respond to a call for Market-Makers in that class of options on that day. Although this has been the general practice of the Exchange, the Exchange believes it would be desirable to incorporate this practice into a rule to assure that all Market-Makers will be aware of the requirement and so that its observance will be uniform. Other proposed changes to Rule 7.5 would make clear that floor brokers are permitted to call for additional Market-Makers and modify the recordkeeping requirements of Order Book Officials applicable to the call for Market-Makers. In addition, proposed Interpretations .02 and .03 to Rule 7.5 were designed to facilitate the Order Book Officials' ability to determine which Market-Makers are required to respond to their calls.

The proposed changes in Rule 8.2 reflect the establishment of the Market Performance Committee, the transfer of certain housekeeping functions from the Secretary of the Exchange to the Membership Department and other housekeeping changes.

The principal proposed change effected in Rule 8.3(a) is the elimination of supplemental appointments for Market-Makers. Since its inception, the Exchange has allowed Market-Makers to have both principal and supplemental appointments, and, under the provisions of present Interpretation .02 and Rule 8.3, some Market-Makers have qualified for and received only supplemental appointments. Interpretation .02 to Rule 8.3 reflected the Exchange's belief that the supplemental market making capacity of members of the Chicago Board of Trade and of Exchange floor brokers would enhance the overall market making capacity on the Exchange and would provide a source of supplementary income for floor brokers. The Exchange has now concluded that the present market making capacity of the Exchange makes it unnecessary to rely on such supplementary market making capacity and permits the Exchange to adopt a rule requiring every Market-Maker to accept appointment to at least one group of options classes. However, this change would be coupled with a change in policy which would permit every Market-Maker to be appointed to options classes covering up to 30 underlying securities (or up to 40 underlying securities for those Market-Makers who traded in excess of 20,000 contracts during the preceding calendar quarter).

Present Interpretation .02 to Rule 8.3, Rule 8.7(c), Interpretation .03 to Rule 8.7, and paragraph (b) to Interpretation .04 to Rule 8.9 are proposed to be deleted to reflect the elimination of supplemental appointments.

Present Interpretation .04 to Rule 8.7 (which would be renumbered Interpretation .03) is being modified to reflect the elimination of supplemental appointments. The Interpretation as modified would require that not less than 75% of the trading activity of a Market-Maker in any calendar quarter must be in classes of options contracts to which the Market-Maker's appointment extends. In addition, a new provision has been added to this Interpretation requiring every Market-Maker during each calendar quarter, except for unusual circumstances, to execute in person the lesser of (a) 75% of his trading activity or (b) 20,000 contracts in those classes to which he holds an appointment. Although the Exchange believes that it is absolutely vital for it to continue to permit Market-Makers to effect transactions through orders placed with floor brokers, it believes that Market-Makers should, to the maximum extent practicable, be on the floor of the Exchange personally effecting transactions in their appointed classes. However, since the impact of this new requirement cannot be predicted with certainty, the Exchange intends to monitor the impact so as to be sure that it does not result in adverse effects on the Exchange's market making capabilities or in competitive burdens on the Exchange's Market-Makers. The percentage requirements of this Interpretation will continue to be considered in the light of a weighting factor based upon relative inactivity of one or more classes of options contracts.

The Exchange manual describing the procedures for the evaluation of Market-Makers has been revised to reflect the foregoing proposed Rules changes. The manual consists of five sections: Policies Governing the Appointment of Market-Makers; Evaluation Policy; Broker's Analysis Printout Format; Evaluation Procedures; and Remedial Actions. The manual does not, however, contain the section relating to Broker's Analysis Printout Format because a computer programming change encompassing the proposed changes must first be completed. That section will be submitted to the Commission upon its completion. A brief description of the contents of the four other sections follows.

(i) Policy for Appointment of Market-Makers

The proposed revised procedures would require each Market-Maker to select and to be appointed to at least one stock group. The Market-Maker may also choose additional stock groups, provided that the total number of underlying stocks to which his appointment extends may not exceed thirty. However, a Market-Maker whose contract volume in appointed classes in the prior calendar quarter exceed 20,000 contracts could have his appointment extended to forty underlying stocks.

The proposed procedures would allow a Market-Maker to change appointments at any time provided that the stock groups for which his appointment is being terminated have been effectively part of the appointment for at least one month. In order to eliminate burdensome recordkeeping requirements, all appointments must be made effective as of the first day of a calendar month—either retroactively to the first of the month in which the change is made or prospectively to the first day of the following month.

New members are required to choose an appointment within thirty days of opening a Market-Maker account.

(ii) Evaluation Policy

The first part of this section describes how a commencement of or a change in membership status affects the evaluation process.

The second part sets forth the requirements of Interpretation .03 to Rule 8.7—described above.

(iii) Evaluation Procedure

This section described the procedures for conducting reviews by the Market Performance Committee of Market-Makers who fall to meet quarterly percentage requirements.

(iv) Remedial Actions

The section sets for the the sanctions which may be applied by the Market Performance Committee. The procedures allow the Committee flexibility in its choice of remedial actions. For example, the section allows a succession of warning letters to be given to a Market-Maker in the case of marginal failures to meet requirements. On the other hand, in a first-time case involving a blatant and substantial infraction, the Committee may, under the proposed procedures, imposed considerably more stringent sanctions. The procedures also give the Committee the power to remove certain options classes from a Market-Maker's appointment as a remedial action, a power not presently available to the Floor procedure Committee.

The Exchange believes that the proposed rule changes will enhance the Exchange's overall market making capabilities and therefore serve to improve the mechanism of a free and open market, help to maintain a fair and orderly market, improve the Exchange's surveillance and are generally in the public interest and for the protection of investors. Therefore, the statutory bases for the proposed changes are Sections 6(b)(1), 6(b)(5) and 11(b) of the Act. Moreover, the Exchange intends the proposed changes to be responses to concerns expressed by the Commission staff.

No comments were solicited regarding this proposed filing and none have been received.

The Exchange does not believe that the proposed rules changes create any burden on competition as among Exchange members that is not necessary or appropriate under the Act. The effect of the proposed rules changes on competition between the respective options exchanges may depend on

whether or not other options exchanges adopt similar rules.

On or before August 4, 1980 or within such longer period (i) as the Commission may designated up to 90 days of such date if it finds such longer period to be appropriate and publishes its reasons for so finding or (ii) as to which the above-mentioned self-regulatory organization consents, the Commission will:

(A) By order approve such proposed rule change, or

(B) Institute proceedings to determine whether the proposed rule change should be disapproved.

Interested persons are invited to submit written data, views and arguments concerning the foregoing. Persons desiring to make written submissions should file 6 copies thereof with the Secretary of the Commission, Securities and Exchange Commission, Washington, D.C. 20549. Copies of the filing with respect to the foregoing and of all written submissions will be available for inspection and copying in the Public Reference Room, Securities and Exchange Commission, 1100 L Street, NW., Washington, D.C. Copies of such filling will also be available for inspection and copying at the principal office of the above-mentioned self-regulatory organization. All submissions should refer to the file number referenced in the caption above and should be submitted on or before July 21, 1980.

For the Commission by the Division of Market Regulation, pursuant to delegated authority.

George A. Fitzsimmons,

Secretary.

[FR Doc. 80-19564 Filed 6-27-80; 8:45 am]

BILLING CODE 8010-01-M

[Release No. 34-16916; File No. SR-PSE-80-12]

Pacific Stock Exchange, Inc.; Self-Regulatory Organizations; Proposed Rule Change

Pursuant to Section 19(b)(1) of the Securities Exchange Act of 1934, 15 U.S.C. 78s(b)(1), as amended by Pub. L. No. 94-29, 16 (June 4, 1975), notice is hereby given that on June 9, 1980, the above-mentioned self-regulatory organization filed with the Securities and Exchange Commission a proposed rule change as follows:

PSE's Statement of the Subjects and Issues Involved in the Proposed Rule Change

The Pacific Stock Exchange Incorporated ("PSE") proposes to amend Rule VI, Sections 49 and 57 of the Rules of the Board of Governors of the PSE. The amendments relate to the definitions of spread orders, straddle orders, and combination orders.

PSE's Statement of Basis and Purpose

The basis and purpose of the foregoing rule change is as follows:

The purpose of the amendments to Section 49 is to extend to combination orders the same limited exception to book priority which spread orders and straddle orders have been granted pursuant to Section 49 when such orders "touch the book".

The purpose of the amendment to Section 57 is to define combination orders. In addition, the definitions of spread order and straddle order have been clarified to provide that in the case of adjusted options contracts, such orders need not consist of the same number of contracts so long as the number of contracts both represent the same number of shares of the underlying security.

The proposed rule changes are consistent with Section 6(b)(5) of the Securities Exchange Act of 1934 inasmuch as the changes are intended to foster just and equitable principles of trade.

Comments have neither been solicited nor received from members, participants, or others on the proposed rule change.

The proposed rule change imposes no burden on competition.

On or before August 4, 1980, or within such longer period (i) as the Commission may designate up to 90 days of such date if it finds such longer period to be appropriate and publishes its reasons for so finding or (ii) as to which the above-mentioned self-regulatory organization consents, the Commission will:

(A) By order approve such proposed rule change, or

(B) Institute proceedings to determine whether the proposed rule change should be disapproved.

Interested persons are invited to submit written data, views and arguments concerning the foregoing. Persons desiring to make written submissions should file six copies thereof with the Secretary of the Commission, Securities and Exchange Commission, Washington, D.C. 20549. Copies of the filing with respect to the foregoing and of all written submissions will be available for inspection and copying in the Public Reference Room, 1100 L Street, N.W., Washington, D.C. Copies of such filing will also be available for inspection and copying at the principal office of the above-mentioned self-regulatory organization. All submissions should refer to the file number referenced in the caption above and should be submitted on or before July 21, 1980.

For the Commission by the Division of Market Regulation, pursuant to delegated authority.

George A. Fitzsimmons,

Secretary.

June 20, 1980.

[FR Doc. 80-19565 Filed 6-27-80; 8:45 am]

BILLING CODE 8010-01-M

SMALL BUSINESS ADMINISTRATION

[Delegation of Authority No. 1-A; Revision 8]

Line of Succession to the Administrator; Delegation of Authority

Delegation of Authority No. 1-A (Revision 7) (44 FR 25717) is hereby revised to read as follows:

I. Pursuant to authority vested in me by the Small Business Act, 72 Stat. 384, as amended, the Small Business Investment Act of 1958, 72 Stat. 689, as amended, authority is hereby delegated to the following officials in the following order:

1. Associate Deputy Administrator for Programs
2. Associate Deputy Administrator for Support Services
3. Associate Administrator for Policy, Planning and Budgeting
4. Associate Administrator for Minority Small Business and Capital Ownership Development
5. General Counsel

to perform, in the event of the absence or incapacity of the Administrator and the Deputy Administrator, any and all acts which the Administrator is authorized to perform, including but not limited to authority to issue, modify, or revoke delegations of authority and regulations, except exercising authority under Section 7(a) (6), 9(d) and 11 of the Small Business Act, as amended.

II. Anyone designated by the Administrator as acting due to a vacancy in one of the positions listed above remains in the line of succession; otherwise in the absence of one of the above, the authority moves to the next position.

III. This delegation is not in derogation of any authority residing in the above listed officials relating to the operations of their respective programs nor does it affect the validity of any delegations currently in force and effect and not specifically cited as revoked or revised herein.

Effective Date: June 30, 1980.

Dated: June 23, 1980.

A. Vernon Weaver,

Administrator.

[FR Doc. 80-19543 Filed 6-27-80; 8:45 am]

BILLING CODE 8025-01-M

[Declaration of Disaster Loan Area No. 1863]

Montana; Declaration of Disaster Loan Area

Lake and Missoula Counties and Adjacent counties within the State of Montana constitute a disaster area as a result of damage caused by flooding which occurred on May 25-26, 1980. Eligible persons, firms and organizations may file applications for loans for physical damage until the close of business on August 22, 1980, and for economic injury until the close of business on March 23, 1981, at: Small Business Administration, District Office, 301 South Park, Room 528, Federal Office Building, Drawer 10054, Helena, Montana 59601, or other locally announced locations.

(Catalog of Federal Domestic Assistance Program Nos. 59002 and 59008.)

Dated: June 23, 1980.

William H. Mauk, Jr.,

Acting Administrator.

[FR Doc. 80-19544 Filed 6-27-80; 8:45 am]

BILLING CODE 8025-01-M

[Declaration of Disaster Loan Area No. 1862]

New York; Declaration of Disaster Loan Area

The area of 611-619 East 186th Street and 2353-2363 Hughes Avenue, in the City of New York, Bronx County, New York, constitutes a disaster area because of damage resulting from a fire which occurred on May 20, 1980. Eligible persons, firms and organizations may file applications for loans for physical damage until the close of business on August 22, 1980, and for economic injury until the close of business on March 23, 1981, at: Small Business Administration, District Office, 26 Federal Plaza, Room 3100, New York, New York 10007, or other locally announced locations.

(Catalog of Federal Domestic Assistance Program Nos. 59002 and 59008.)

Dated: June 23, 1980.

William H. Mauk, Jr.,

Acting Administrator.

[FR Doc. 80-19545 Filed 6-27-80; 8:45 am]

BILLING CODE 8025-01-M

[Declaration of Disaster Loan Area No. 1858]

Texas; Declaration of Disaster Loan Area

Bell County and adjacent counties within the State of Texas constitute a disaster area as a result of damage caused by a tornado, high winds, heavy rains and rising water which occurred on May 13-14, 1980. Eligibile persons, firms and organizations may file applications for loans for physical damage until the close of business on August 22, 1980, and for economic injury until the close of business on March 23, 1981, at: Small Business Administration, District Office, 1100 Commerce Street, Dallas, Texas 75242, or other locally announced locations.

(Catalog of Federal Domestic Assistance Program Nos. 59002 and 59008.)

Dated: June 23, 1980.

William H. Mauk, Jr.,

Acting Administrator.

[FR Doc. 80-19546 Filed 6-27-80; 8:45 am]

BILLING CODE 8025-01-M

[Declaration of Disaster Loan Area No. 1821; Amendment No. 4]

Texas; Declaration of Disaster Loan Area

The above-numbered Declaration and Amendments thereto (See 45 FR 29153, 37798, and 42166) are hereby further amended by adding the following counties:

County	Natural disaster	Date
Callahan	Drought	6/1/79-5/1/80
Dimmit	Drought	6/1/79-5/5/80
	Late freeze	4/1-2/80
Frio	Torrential rain	5/15/80
Jim Hogg	Drought	9/1/79-4/24/80
Kenedy	Drought	1/1/80-4/22/80
	Windstorm	4/12-13/80
	Frost	4/12/80

and adjacent counties within the State of Texas as a result of natural disasters as indicated. All other information remains the same, i.e., the termination dates for filing applications for physical damage is close of business on October 22, 1980, and for economic injury until the close of business on January 22, 1981.

(Catalog of Federal Domestic Assistance Program Nos. 59002 and 59008.)

Dated: June 19, 1980.

William H. Mauk, Jr.,

Acting Administrator.

[FR Doc. 80-19547 Filed 6-27-80; 8:45 am]

BILLING CODE 8025-01-M

DEPARTMENT OF TRANSPORTATION

Federal Aviation Administration

[Summary Notice No. PE-80-18]

Petitions for Exemption; Summary of Petitions Received and Dispositions of Petitions Issued

AGENCY: Federal Aviation Administration (FAA), DOT.

ACTION: Notice of petitions for exemptions received and of dispositions of petitions issued.

SUMMARY: Pursuant to FAA's rulemaking provisions governing the application, processing, and disposition of petitions for exemption (14 CFR Part 11), this notice contains a summary of certain petitions seeking relief from specified requirements of the Federal Aviation Regulations (14 CFR Chapter I) and of dispositions of certain petitions previously received. The purpose of this notice is to improve the public's awareness of, and participation in, this aspect of FAA's regulatory activities. Publication of this notice and any information it contains or omits is not intended to affect the legal status of any petition or its final disposition.

DATES: Comments on petitions received must identify the petition docket number involved and must be received on or before: July 21, 1980.

ADDRESSES: Send comments on any petition in triplicate to: Federal Aviation Administration, Office of the Chief Counsel, Attn: Rules Docket (AGC-204), Petition Docket No. ———, 800 Independence Avenue, SW., Washington, D.C. 20591.

FOR FURTHER INFORMATION: The petition, any comments received and a copy of any final disposition are filed in the assigned regulatory docket and are available for examination in the Rules Docket (AGC-204), Room 916, FAA Headquarters Building (FOB 10A), 800 Independence Avenue, SW, Washington, D.C. 20591; telephone (202) 426-3644.

This notice is published pursuant to paragraphs (c), (e), and (g) of § 11.27 of Part 11 of the Federal Aviation Regulations (14 CFR Part 11).

Issued in Washington, D.C., on June 23, 1980.

Donald P. Byrne,

Acting Assistant Chief Counsel, Regulations and Enforcement Division.

Petitions for Exemptions

Docket No.	Petitioner	Regulations affected	Description of relief sought
18236	Air Transport Assn	CFR 14 § 121.441(e)	To extend the expiration date of exemption No. 2594 which permits ATA's member airlines to accomplish an entire pilot proficiency check in a visual simulator approved for the landing maneuver.
20377	Delta Airlines Inc	CFR 14 § 121.413(c)(1)	To allow Delta to substitute training in FAA-approved simulators for the inflight training of its line check airmen.
20378	Beckett Aviation Corp	CFR 14 § 61.58(c)	To allow accomplishment of the entire 24-month pilot-in-command proficiency check in an FAA-approved simulator.
20388	Wiggins Airways	CFR 14 § 135.1(a)(b)	To allow the operation of the Bell 206 helicopter under Part 91 while performing exclusive transportation for personnel employed by two television broadcast stations.
20023	University of Illinois	CFR 14 § 147.21(b) (1) (2) and (3).	Reconsideration of the Denial of Exemption, and to reduce the training hours in their approved curriculum.

Dispositions of Petitions for Exemptions

Docket No.	Petitioner	Regulations affected	Description of relief sought—Disposition
20256	Air Illinois	14 CFR § 121.61(d)(1)	To allow the employment of Mr. John Lilly as their Chief Inspector. Mr. Lilly has not held the airframe and powerplant mechanic's certificate for the full 3-year period. Also, he does not have the 3 years' required experience on large aircraft with an air carrier, commercial operator, or certificated repair station. GRANTED 6/11/80.
19651	Gates Learjet Corp	14 CFR § 21.197	To permit the petitioner to ferry aircraft from Wichita, Kansas, to Phoenix, Arizona, for putposes of completion and certification. GRANTED 6/11/80.
20194	B & L Aviation, Inc	14 CFR § 135.279(b)	To allow petitioner to conduct operations with pilots who have not demonstrated all the required instrument approach procedures. GRANTED 6/12/80.
18456	Conner Air Lines, Inc	14 CFR §§ 91.211(a)(1) and 121.387.	To allow petitioner to operate its DC-6 aircraft without benefit of a certificated flight engineer as a part of the required flight crew. Petitioner proposes to obtain a Standard Type Certificate based on demonstration of a two man flight crew (Captain and Co-pilot). DENIED 6/10/80.
20062	Altair Airlines, Inc	14 CFR Parts 61 and 121	To allow foreign flight instructors (not certificated by the FAA) to give flight instruction in F-28's within the United States. GRANTED 6/9/80.
20408	Bard-Air Corp	14 CFR § 135.244	To allow Mr. James M. Knight to serve as pilot in command in Bard-Air's Piper PA-31 without first obtaining the operating experience required. GRANTED 6/6/80.
19741	Pan American World Airways	14 CFR § 121.291	To allow inauguration of passenger-carrying service with Lockheed L-1011-500 aircraft without first conducting a full-seating capacity emergency evacuation demonstration. GRANTED 6/10/80.

[FR Doc. 80-19351 Filed 6-27-80; 8:45 am]
BILLING CODE 4910-13-M

Federal Highway Administration

Environmental Impact Statement: Washington County, Oreg.

AGENCY: Federal Highway Administration (FHWA), DOT.

ACTION: Notice of intent.

SUMMARY: The FHWA is issuing this notice to advise the public that an environmental impact statement will be prepared for a proposed highway in Washington, County, Oregon.

FOR FURTHER INFORMATION CONTACT: Paul V. Riedl, Environmental Coordinator, Federal Highway Administration, Equitable Center, Suite 100, 530 Center Street NE., Salem, Oregon 97301, Telephone: (503) 378-3832.

SUPPLEMENTAL INFORMATION: The FHWA, in cooperation with the Oregon Department of Transportation, will prepare an environmental impact statement (EIS) on a proposed improvement of the Sunset Highway/Oregon 217 Interchange in Washington County, Oregon. The project is located at the intersection of Highway 26 (sunset Highway) and Highway 217 (Beaverton-Tigard Highway) approximately 5 miles west of downtown Portland.

Alternatives under consideration include (1) taking no action (2) reconstruction of the interchange (3) reconstruction of the interchange with a new public street connection north of the Sunset Highway. Design options for the interchange will be considered during the study stage.

Information describing the proposed action will be sent to the appropriate Federal, State, and local agencies and to citizens who have previously been involved and expressed interest in this proposal. As necessary public meetings will be held and, in addition, a public hearing will be held. No formal scoping meeting is planned at this time.

Comments or questions concerning this proposed action and the EIS should be directed to the FHWA at the address provided above.

Issued on: June 6, 1980.

E. J. Valach,

Program Development Engineer, Oregon Division, Salem, Oregon.

Environmental Assessment; Brown County, Wis.

AGENCY: Federal Highway Administration (FHWA), DOT.

ACTION: Notice of intent.

SUMMARY: The FHWA is issuing this notice to advise the public that an environment assessment has been prepared instead of an environmental impact statement for a proposed highway project in Brown County, Wisconsin.

FOR FURTHER INFORMATION CONTACT: Frederick H. Downs, Staff Specialist for Environment, Federal Highway Administration, 4502 Vernon Blvd., P.O. Box 5428, Madison, Wisconsin 53705. Telephone: (608) 264-5956.

SUPPLEMENTARY INFORMATION: The March 6, 1980 Federal Register contained a Notice of Intent that the FHWA, in cooperation with the Wisconsin Department of Transportation, would prepare an environmental impact statement (EIS) for the replacement of the highway bridge crossing the Fox River at Walnut Street (STH 29) in the City of Green Bay in Brown County, Wisconsin. After reviewing the preliminary draft EIS, it was determined that the proposed project would not have a significant effect on the quality of the human environment. Accordingly, the environmental document has now been prepared as an Environmental Assessment.

Comments or questions concerning this proposed action and the Environmental Assessment should be directed to the FHWA at the address provided above.

Issued on: June 20, 1980.

Herbert R. Teets,

Division Administrator, Madison, Wisconsin.

[FR Doc. 80-19441 Filed 6-27-80; 8:45 am]

BILLING CODE 4910-22-M

National Highway Traffic Safety Administration

Calendar of Meetings Open to the Public

This calendar consists of NHTSA-sponsored meetings in which public interest or participation is expected. It is published for planning purposes and meeting dates and places are subject to change.

July 9, 1980

NHTSA-Public-Industry Technical Meeting, Ann Arbor, Michigan

Purpose: Technical, interpretative or procedural questions from the public and industry regarding NHTSA's bumper, vehicle safety and consumer information programs will be answered. Questions may relate to the research and development, rulemaking, or enforcement (including defects) phases of these activities. One other meeting is scheduled this year for October 8, also in Ann Arbor.

Coordinator: Michael Finkelstein, Rulemaking (NRM-01), 202-426-1810.

Fall 1980

Automotive Fuel Economy Contractors' Coordination Meeting (Location undetermined)

Purpose: Progress reports on the contracts which have been funded through the Automotive Fuel Economy Research Program will be given. How individual tasks fit into the research and rulemaking program and the thrust of the Automotive Fuel Economy Program will be explained.

Coordinator: Charles L. Gauthier, Research and Development (NRD-13), 202-426-2957.

September 1980

Motorcycle Accident Factors Research, DOT Headquarters Building, Washington, D.C.

Purpose: Results of a research study to determine the cause of motorcycle accidents, the causes of injuries, the severity of the injuries and effective methods of reducing accidents, deaths, and injuries will be reported.

Coordinator: Nicholas G. Tsongos, Research and Development (NRD-32), 202-426-9124.

September 23-24, 1980

National Highway Safety Advisory Committee Meeting—Orientation for New Members, DOT Headquarters Building, Washington, D.C.

Purpose: Orientation session for newly appointed members of the Committee.

Coordinator: Robert Doherty, Executive Secretariat (NOA-10), 202-426-2872.

October 2, 1980

Biomechanics Advisory Committee Meeting, DOT Headquarters Building, Washington, D.C.

Purpose: This Committee reviews NHTSA's procedures, programs and projects requiring the use of live and deceased humans for research in order to validate the need for such use, to minimize the risk of injury to volunteers, and to assure the rights and dignity of the subjects.

Coordinator: Kathy Hasse, Executive Secretariat (NOA-10), 202-426-2872.

October 21-24, 1980

Eighth International Technical Conference on Experimental Safety Vehicles, Wolfsburg, West Germany

Purpose: The ESV Conferences are conducted to provide a forum for exchanging the results of integrated vehicle development. Various automobile manufacturers, as well an NHTSA Contractors, have designed and developed vehicles which incorporate advanced systems to satisfy national goals in safety, fuel economy, and vehicle emissions. This meeting will be hosted by the Federal Republic of Germany. The Governments of the Federal Republic of Germany, France, Great Britain, Italy, Japan, Sweden and the United States as well as manufacturers of these countries and others will participate.

Coordinator: James C. Shively, Research and Development (NRD-10), 202-426-2957.

October 27-29, 1980

National Highway Safety Advisory Committee Meeting, DOT Headquarters Building, Washington, D.C.

Purpose: Full Committee session along with appropriate Task Force sessions. Introductory briefings on the subject areas for study during the 1981-1982 session.

Coordinator: Robert Doherty, Executive Secretariat (NOA-10), 202-426-2872.

October 28-30, 1980

Fatal Accident Reporting System (FARS), Annual Workshop, Orlando, Florida

Purpose: To solve interpretation and operations problems and to provide a mechanism for installing system changes and updating training. This is a regularly scheduled working meeting of FARS State Analysts and NHTSA regional and headquarters technical managers. Schedule for future meeting: October 28-30, 1981.

Coordinator: Angie Sebastian, Research and Development (NRD-33), 202-426-4844.

November 17-18, 1980

National Accident Sampling Systems (NASS), Advisory Committee Meeting, Washington, D.C.

Purpose: To review program status and make recommendations on data collected, field procedures and analysis, including plans and operations.

Coordinator: Russell A. Smith, Research and Development (NRD-32), 202-426-1924.

December 9-11, 1980

Symposium on Automotive Ratings, Host Farm Inn, 2300 Lincoln Highway East, Lancaster, Pennsylvania

Purpose: To exchange information on the "state-of-the-art" of automobile ratings, crashworthiness, damageability and ease of diagnosis and repair, as well as to provide an opportunity for those affected by the ratings to comment. In addition to technical data, public comment and reaction will be solicited to insure that the ratings program is responsive to consumer needs.

Coordinator: Ivy Baer, Office of Rulemaking (NRM-30), 202-426-0852.

January 19-21, 1981

National Highway Safety Advisory Committee Meeting (Tentative), DOT Headquarters Building, Washington, D.C.

Purpose: Progress reports of the Committee's task forces will be heard. Reports and recommendations for the Secretary of Transportation may be prepared.

Coordinator: Robert Doherty, Executive Secretariat (NOA-10), 202-426-2872.

June 15-17, 1981

National Highway Safety Advisory Committee Meeting DOT Headquarters Building, Washington, D.C.

Purpose: Progress reports of the Committee's task forces will be heard. Reports and recommendations for the Secretary of Transportation will be adopted.

Coordinator: Robert Doherty, Executive Secretariat (NOA-10), 202-426-2872.

October 28-30, 1981

Fatal Accident Reporting System (FARS), Annual Workshop (Location Undetermined)

Purpose: To resolve interpretation and operations problems and to provide a mechanism for installing system changes and updating training. This a regularly scheduled meeting.

Coordinator: Angie Sebastian, Research and Development (NRD-33), 202-426-4844.

October 1981

Second International Conference on Automotive Fuel Economy Research, Rome, Italy

Purpose: Government Status Reports on Automotive Transportation Conservation Programs and reports of research in automotive technology for improved fuel economy will be presented.

Coordinator: James C. Shively, Research and Development (NRD-10), 202-426-2957.

Persons desiring additional information on a particular meeting may phone the coordinator listed under each meeting.

Alternatively, the coordinator can be reached by mail at the following address: U.S. Department of Transportation, National Highway Traffic Safety Administration, 400 Seventh Street, S.W., Washington, D.C. 20590.

Issued in Washington, D.C. on June 23, 1980.

Wm. H. Marsh,

Executive Secretary.

[FR. Doc. 80-19405 Filed 6-27-80; 8:45 am]

BILLING CODE 4910-59-M

Denial of Petition for Rulemaking

AGENCY: National Highway Traffic Safety Administration (NHTSA).

ACTION: Denial of petition for rulemaking.

SUMMARY: This notice denies a petition for rulemaking submitted by the Motor and Equipment Manufacturers Association (MEMA) to amend Part 573, *Defect and Noncompliance Reports.* The MEMA petition asked the agency to amend the record retention requirements for equipment manufacturers. Their petition is denied.

FOR FURTHER INFORMATION CONTACT: Mr. James Murray, Office of Defects Investigation, National Highway Traffic Safety Administration, 400 Seventh Street, S.W., Washington, D.C. 20590 (202-426-2840).

SUPPLEMENTARY INFORMATION: On December 26, 1978 (43 FR 60165), the National Highway Traffic Safety Administration published a rule amending Part 573, *Defect and Noncompliance Reports,* to add reporting requirements for equipment manufacturers. The agency subsequently received a petition for reconsideration from the MEMA with respect to section 573.7(c) of the regulation which requires equipment manufacturers to maintain lists of those persons or businesses notified of a defect or noncompliance. The MEMA was concerned that this section of the regulation went too far and, in fact, required equipment manufacturers to maintain first purchaser lists as well as much other information that they do not normally maintain in the regular course of business. On April 5, 1979, the agency responded to that petition for reconsideration (44 20434) by amending the recordkeeping portion of the regulation to further clarify the fact that only records produced during the actual recall campaign are required to be retained by this section.

The MEMA asked the agency for a meeting on the recordkeeping issue after the denial of their petition. On May 8, 1979, members of the agency met with members of the MEMA to further explain the regulation and to hear their complaints. Still dissatisified with the recordkeeping section, the MEMA again petitioned the agency on October 17, 1979, for an amendment to Part 573.7(c). In their petition the MEMA proposed language for the section. The agency concludes that the MEMA's suggested language would confuse the section - rather than clarify it and is unnecessary. Accordingly, the petition is denied.

The MEMA proposal would reword section 573.7 in a way that the MEMA believes would clarify the fact that equipment manufacturers are required only to maintain lists of their customers to whom a notice of defect or noncompliance has been sent. The agency concludes that the existing language of the section clearly states the recordkeeping responsibilities of equipment manufacturers. The current regulation requires manufacturers to maintain in a suitable form for inspection a list of customers (i.e., distributors) who have been notified of a defect or noncompliance. Further, equipment manufacturers are required to maintain lists of the most recent purchasers or their equipment known to them to whom notification has been sent. In other words, an equipment manufacturer must retain the names and addresses of those persons or businesses to whom it has sent defect or noncompliance notices. If an equipment manufacturer sends no defect or noncompliance notifications, it need not retain customer or first purchaser lists. The duty to retain begins only at the time of notification. Retention of the names and addresses of persons or businesses notified of defects or noncompliances is important for the agency and for the consumer in the event that an equipment owner must be contacted again concerning post-recall problems.

The present regulation also requires equipment manufacturers to retain information relating to date of shipment and number of items sold of defective or noncomplying equipment when this information is known. Again, this retention requirement arises only after a defect or noncompliance has been determined. Equipment manufacturers are not required to maintain a file of this information at the time equipment is produced or shipped. The MEMA petition would have the agency delete these limited requirements. The agency concludes that this would not be in the interest of safety since it might slow the process of monitoring recall actions.

Finally, the MEMA proposal would require the information to be retained for 6 months rather than the 5 years currently required by the regulation.

Retaining the information for 6 months would be completely inadequate. It frequently takes some time to discover whether a remedy of a defect or noncompliance is effective or whether further recall work needs to be done. If additional work is necessary, the persons contacted in the first recall would need to be renotified. It is unlikely that the agency or the manufacturer would have the final results on the effectiveness of a recall in 6 months. Therefore, the agency will continue to require these records to be retained for 5 years.

The agency notes again for clarity that Part 573 is a reporting requirement that merely has minor recordkeeing provisions relating to the reports and information that are generated during recalls. Otherwise this regulation is not a recordkeeping regulation. If the agency wanted to require purchaser lists and impose other recordkeeping burdens upon all equipment manufacturers, it would do so by amending Part 576, which is the agency's recordkeeping regulation.

The agency currently has no broad recordkeeping regulation applicable to equipment manufacturers other than the recordkeeping requirements applicable to tire manufacturers. Other equipment manufacturers are subject to few recordkeeping requirements until a recall campaign begins. When a recall campaign begins, an equipment manufacturer is required to retain some information generated through that campaign. This is a very limited and reasonable requirement.

The MEMA has raised the issue of the agency's recordkeeping requirements for the industry several times, and the agency has not responded to it in three separate notices. The agency concludes that its position is completely clear and that its regulations adequately state the responsibilities of equipment manufacturers. Accordingly, the agency will not consider further repetitive petitions on this point.

(Sec. 103, 119, Pub. L. 89-563, 80 Stat. 718 (15 U.S.C. 1392, 1407); delegation of authority at 49 CFR 1.50).

Issued on June 23, 1980.

Joan Claybrook,

Administrator.

[FR Doc. 80-19538 Filed 6-27-80; 8:45 am]

BILLING CODE 4910-59-M

Urban Mass Transportation Administration

Intent To Prepare an Environmental Impact Statement

In accordance with the provisions of the National Environmental Policy Act (93 Stat. 852), the Council of Environmental Quality's implementing regulations (40 CFR Parts 1500-1508) and the Urban Mass Transportation Administration's Policy on Major Urban Mass Transportation Investments (published in the Federal Register on September 22, 1976), the Urban Mass Transportation Administration hereby gives notice that an analysis of transportation alternatives in the Dallas North Central Subarea and preparation of a related Draft Environmental Impact Statement are to begin following a public meeting July 17, 1980 at which the scope and conduct of the analysis will be discussed.

Members of the public and interested Federal, State, and local agencies are invited to comment on the proposed scope of work, the alternatives to be studied, and the evaluation criteria which should be used to arrive at a decision. This Scoping Meeting will be held at 9:00 a.m. at the Federal Building, 1100 Commerce Street, Room 7A23, Dallas, Texas.

The Urban Mass Transportation Administration's *Policy on Major Urban Mass Transportation Investments* requires a metropolitan area planning organization to undertake such an analysis of alternatives if the area is contemplating seeking Federal funding for a major investment. The Policy defines a major investment as any new or extended fixed guideway transit facility. The subject analysis will be conducted by the North Central Texas Council of Governments and the City of Dallas, in cooperation with the Urban Mass Transportation Administration. Consultant support will be included in the analysis.

The Dallas North Central Subarea is defined as the 18-mile north-south corridor running from the Dallas Central Business District north to the city of Plano. The corridor is bounded roughly by the Dallas North Tollway on the west, the north city limit of Plano on the north, Gaston Avenue/White Rock Lake/Jupiter Road on the east, and the Dallas Central Business District on the south. The study area encompasses approximately 120 square miles and contains more than 400,000 people and 200,000 jobs today. The subarea includes all or part of the cities of Dallas, Highland Park, University Park, Richardson, and Plano, which include parts of Dallas County and Collin County, Texas. The subarea exhibits the most rapid commercial and residential growth in the Dallas-Fort Worth Metroplex.

Proposed transportation alternatives include expanded express bus, light rail, commuter rail and highway-only solutions, in addition to the Null (Do-Nothing) Alternative. The major investment alternatives include elevated, at-grade, and underground alignments. The horizontal alignments being considered include locations along the north-south arterials in the subarea, existing railroad rights-of-way, and the east-west route of LBJ Freeway (IH 635).

The proposed evaluation criteria will include transportation, land use environment, social considerations, economic and financial considerations, and cost, in compliance with current Federal (NEPA) and state environmental laws and current Federal CEQ, UMTA, and FHWA guidelines. Additional impact areas and measures important to local decision-making will also be included.

At the July 17, 1980 Scoping Meeting, staff will present the above information in more detail using maps and visual aids, as well as a plan for an active citizen participation program, a work schedule, and budget. The public and affected public agencies will be invited to comment, either orally at the meeting or in writing, for a period of 30 days following the meeting. Appropriate adjustments to the work scope and alternatives will be made accordingly.

If there are any questions, please contact the UMTA Project Manager, Edward L. Thomas, 400 7th Street, S.W., Room 9314, Washington, D.C. 20590, telephone (202) 426-2360, or the UMTA Regional Office Planning Representative, Blas Uribe, 819 Taylor Street, Suite 9A32, Fort Worth, Texas 76102, (817) 334-3787 or the Local Agency Project Director, Mr. Terry Watson, North Central Texas Council of Governments, P.O. Drawer COG, 1201 North Waston Road, Arlington, Texas 76011, (817) 640-3300.

Dated: June 20, 1980.

Robert H. McManus,

Associate Administrator for Planning, Management and Demonstrations.

[FR Doc. 80-19404 Filed 6-27-80; 8:45 am]

BILLING CODE 4910-57-M

DEPARTMENT OF THE TREASURY

Internal Revenue Service

Public Inspection of Written Determinations; Intention to Disclose

AGENCY: Internal Revenue Service, Treasury.

ACTION: Notice of intention to disclose.

SUMMARY: This document provides notice that the Service intends to make

open to public inspection certain written determinations. This notice also explains how any person may determine whether any of the described written determinations pertain to that person, and explains the procedures that person may follow if there is disagreement regarding the proposed deletions. This document does not meet the criteria for significant regulations set forth in paragraph eight of the Treasury Directive appearing in the Federal Register for Wednesday, November 8, 1978.

DATES: Persons not responding to any earlier Federal Register notice of intention to disclose who wish to find out whether their particular written determinations are among those to be made open to public inspection pursuant to this notice are requested to contact the Service by July 15, 1980.

Requests for additional deletions must be submitted by August 4, 1980. A petition in the United States Tax Court must be filed by September 15, 1980. Except for the disputed portion of any document that is the subject of an action brought in the United States Tax Court, the written determinations described in this notice will be made open to public inspection on (Monday preceding the 121st day after this notice is published in the Federal Register).

ADDRESS: Any questions or correspondence regarding this notice should be sent to: International Revenue Service, Attention: T:FP:T, Ben Franklin Station, Post Office Box 7604, Washington, D.C. 20044.

FOR FURTHER INFORMATION CONTACT: George E. Freeland of the Rulings Disclosure Section, Technical Services Branch, Tax Forms and Publications Division, Office of the Assistant Commissioner, Technical; 202-566-4378 or 202-566-6272.

SUPPLEMENTARY INFORMATION: Section 6110(h) of the Internal Revenue Code of 1954 provides that certain written determinations (letter rulings and technical advice memoranda) issued in response to requests submitted before November 1, 1976, shall be open to public inspection. Accordingly, the Service is preparing to open to public inspection certain written determinations issued by the Internal Revenue Service. The written determinations to be made open to public inspection pursuant to this notice have been described in more detail in one of the Federal Register notices of intention to disclose published on February 21, 1978, March 31, 1978, May 3, 1978, May 30, 1978, August 2, 1978, November 9, 1978, January 31, 1979, or on April 5, 1979. This notice applies to written determinations that fall within the description of one of these earlier notices but which were not available for processing for public inspection at an earlier date.

Deletions

Section 6110(c) of the Code requires the Internal Revenue Service to delete certain information from the documents described in this notice. The Service intends to delete names, addresses, and taxpayer identifying numbers, and will also attempt to recognize and delete other identifying details, trade secrets, and the other information described in section 6110(c), before making the written determination open to public inspection.

Persons to whom the written determinations described in this notice pertain (or successors in interest, executors, or authorized representatives of these persons) may contact the Internal Revenue Service to find out whether their particular written determinations are among those to be made open to public inspection pursuant to this notice. These persons may request a copy of their written determinations with proposed deletions indicated. Such requests should be submitted by July 15, 1980. Such requests must indicate the specific name of the party to which the written determination pertains, for example, a corporation acting on behalf of one or more subsidiaries must indicate the name of such subsidiary or subsidiaries. If such a person disagrees with the proposed deletions, that person may indicate any additional information that person believes should be deleted. Any request for additional deletions must be submitted by August 4, 1980, and must include a statement indicating which of the exemptions provided in section 6110(c) of the Code is applicable to each additional deletion requested. If the Service feels it cannot make any or all of the additional deletions requested, the Service will so advise the requester. The requester will then have the right to file a petition in the United States Tax Court. This petition must be filed by September 15, 1980.

Additional Disclosure

After the deleted copy of a written determination is made open to public inspection in the National Office Reading Room, any person may request the Service to make additional portions of the written determination open to public inspection. If the Service receives a request that involves disclosure of names, addresses, or taxpayer identifying numbers, the Service will deny the request. If the request involves disclosure of anything other than names, addresses, or taxpayer identifying numbers, the Service will contact the person to whom the written determination pertains before further action is taken.

Background File Documents

After the deleted copy of a written determination is made open to public inspection, any person may request copies of related background file documents. Notice will be provided to the person to whom the written determination pertains if a request for related background file documents is received.

Any notice regarding background file documents or requests for additional disclosure and any other correspondence relating to public inspection of written determinations, will be mailed to the latest address in the Service's written determination file, unless a later address is provided to the Service in connection with these matters.

The written determinations described in this notice will be made open to public inspection by being placed in the National Office Reading Room, Room 1564, Internal Revenue Service Building, 1111 Constitution Avenue, N.W., Washington, D.C. on (the Monday preceding the 121st day after this notice is published in the Federal Register). However, the disputed portion of any document that is the subject of an action brought in the United States Tax Court shall not be made available until after a court determination regarding such portion is made.

Effect of Earlier Requests

Persons who contacted the Internal Revenue Service in response to an earlier notice need not contact the Service again. The Service will automatically respond to any person who inquired in response to an earlier notice if the written determination or determinations about which that person inquired will be made open to public inspection in accordance with this notice. That person will be forwarded a proposed deleted copy of any such written determination, and will have the rights with respect to requesting additional deletions that are described in this notice.

Jerome Kurtz,

Commissioner of Internal Revenue.

[FR Doc. 80-19502 Filed 6-27-80; 8:45 am]

BILLING CODE 4830-01-M

Sunshine Act Meetings

Federal Register
Vol. 45, No. 127
Monday, June 30, 1980

This section of the FEDERAL REGISTER contains regulatory documents having general applicability and legal effect, most of which are keyed to and codified in the Code of Federal Regulations, which is published under 50 titles pursuant to 44 U.S.C. 1510.
The Code of Federal Regulations is sold by the Superintendent of Documents. Prices of new books are listed in the first FEDERAL REGISTER issue of each month.

CONTENTS

	Items
Civil Rights Commission	1
Commodity Futures Trading Commission	2, 3
Depository Institutions Deregulation Committee	4
Equal Employment Opportunity Commission	5
Federal Energy Regulatory Commission	6
Federal Home Loan Bank Board	7
Federal Maritime Commission	8
National Commission On Libraries and Information Science	9
National Credit Union Administration	10
National Labor Relations Board	11
Tennessee Valley Authority	12

1

COMMISSION ON CIVIL RIGHTS.

DATE AND TIME: 2 p.m., Monday, June 30, 1980.

PLACE: Room 800, 1121 Vermont Avenue NW., Washington, D.C. 20425.

STATUS: Open to the public.

MATTERS TO BE CONSIDERED: I. Review and Approval of Administration of Justice Statement.

FOR FURTHER INFORMATION CONTACT: Charles Rivera, Press and Communications Division (202) 254-6697.

[S-1257-80 Filed 6-26-80; 11:18 a.m.]
BILLING CODE 6335-01-M

2

COMMODITY FUTURES TRADING COMMISSION

"FEDERAL REGISTER" CITATION OF PREVIOUS ANNOUNCEMENT: Vol. 45 No. 119, Wednesday, June 16, 1980.

PREVIOUSLY ANNOUNCED TIME AND DATE OF THE MEETING: 11 a.m., Friday, June 27, 1980.

CHANGES IN THE MEETING: Canceled.

[S-1261-80 Filed 6-26-80; 3:50 pm]
BILLING CODE 6351-01-M

3

COMMODITY FUTURES TRADING COMMISSION.

TIME AND DATE: 11 a.m., Thursday, July 3, 1980.

PLACE: 2033 K Street NW., Washington, D.C., eighth floor conference room.

STATUS: Closed.

MATTERS TO BE CONSIDERED: Surveillance briefing.

CONTACT PERSON FOR MORE INFORMATION: Jane Stuckey, 254-6314.

[S-1258-80 Filed 6-26-80; 2:14 pm]
BILLING CODE 6351-01-M

4

DEPOSITORY INSTITUTIONS DEREGULATION COMMITTEE.

"FEDERAL REGISTER" CITATION OF PREVIOUS ANNOUNCEMENT: 45 FR 41757, June 20, 1980.

PREVIOUSLY ANNOUNCED TIME AND DATE OF THE MEETING: 2:30 p.m., Wednesday, June 25, 1980.

CHANGES IN THE MEETING: Addition of the following open item(s) to the meeting: Consideration of timing with regard to a decision on the proposal to prohibit premiums.

CONTACT PERSON FOR MORE INFORMATION: Mr. Joseph R. Coyne, Assistant to the Board of Governors of the Federal Reserve System (202) 452-3204.

Dated: June 25, 1980.

Normand R. V. Bernard
Executive Secretary of the Committee

[S-1256-80 Filed 6-26-80; 10:32 am]
BILLING CODE 6210-01-M

5

EQUAL EMPLOYMENT OPPORTUNITY COMMISSION.

TIME AND DATE: 9:30 a.m. (eastern time), Tuesday, July 1, 1980.

PLACE: Commission Conference Room, No. 5240, fifth floor, Columbia Plaza Office Building, 2401 E Street NW., Washington, D.C. 20506.

STATUS: Part will be open to the public and part will be closed to the public.

MATTERS TO BE CONSIDERED:

1. Proposed Procedures for Notation Voting.
2. Management Directives on Federal Affirmative Action.

Interim Accomplishment Reports for Minorities, Women and Handicapped for fiscal year 1980.

3. Report on Commission Operations by the Executive Director.

Closed to the public:

1. Litigation Authorization; General Counsel Recommendations.
2. Proposed Decision in charge No. TMK4-0557.
3. EEOC Interpretation of Contribution under Title VII.

Note.—Any matter not discussed or concluded may be carried over to a later meeting.

CONTACT PERSON FOR MORE INFORMATION: Marie D. Wilson, Executive Officer, Executive Secretariat, at (202) 634-6748.

This notice issued June 24, 1980.

[S-1253-80 Filed 6-26-80; 10:12 am]
BILLING CODE 6570-06-M

6

FEDERAL ENERGY REGULATORY COMMISSION.

TIME AND DATE: 10 a.m., July 2, 1980.

PLACE: 825 North Capitol Street NE., Washington, D.C. 20426.

STATUS: Open.

MATTERS TO BE CONSIDERED: Agenda.

Note.—Items listed on the agenda may be deleted without further notice.

CONTACT PERSON FOR MORE INFORMATION: Kenneth F. Plumb, Secretary, telephone (202) 357-8400.

This is a list of matters to be considered by the Commission. It does not include a listing of all papers relevant to the items on the agenda; however, all public documents may be examined in the division of Public Information.

Power Agenda—455th Meeting, July 2, 1980, Regular Meeting (10 a.m.)

CAP-1. Project No. 1490, Brazos River Authority.
CAP-2. Docket No. ER78-380, Indiana & Michigan Electric Co.
CAP-3. Docket No. ER80-366, Middle South Services, Inc.
CAP-4. Docket No. ER80-235, Public Service Co. of New Mexico.
CAP-5. Docket Nos. E-7631, and E-7633, City of Cleveland, Ohio v. Cleveland Electric

Illuminating Co.; Docket No. E-7713, City of Cleveland.
CAP-6. Docket No. EL80-7, Southeastern Power Administration v. Kentucky Utilities Co.
CAP-7. Docket No. EL78-41, Spaulding Fibre Co., Inc.

Miscellaneous Agenda—455th Meeting, July 2, 1980, Regular Meeting

CAM-1. Docket No. RM80-55, revision to FPC form No. 1-annual report for electric utilities licensees and others (class A & B).
CAM-2. The Washington Water Power Co.
CAM-3. Docket No. RM79-21, regulations implementing alternative fuel price ceilings on incremental pricing under the Natural Gas Policy Act of 1978.
CAM-4. Docket No. RM80-16, disclosed estimation methodology approach for determination of volumes of natural gas used for exempt purposes under the incremental pricing program.
CAM-5. Docket No. GP79-84, State of Utah, NGPA section 108 determinations, Gililland & Pix Whyte, State No. 2 well, JD79-12345, Legg Resources, Ltd., Joyce, State No. 1 well JD79-12346.
CAM-6. Docket No. SA80-37, Alabama Gas Corp.
CAM-7. Docket No. RA79-26, Stephens & Cass.
CAM-8. Docket No. RA80-45, Commonwealth Oil Refinery Co., Inc.

Gas Agenda—455th Meeting, July 2, 1980, Regular Meeting

CAG-1. Docket No. RP80-111, ANR Storage Co.
CAG-2. Docket No. RP80-113, Mid-Louisiana Gas Co.
CAG-3. FERC Gas rate schedule Nos. 42, 55, 67 and 22, Warren Petroleum, a division of Gulf Oil Corp.
CAG-4. Docket No. CP80-282, Columbia Gas Transmission Corp.
CAG-5. Docket No. CP80-307, Consolidated Gas Supply Corp.
CAG-6. Docket No. CP80-190, United Gas Pipe Line Co.
CAG-7. Docket No. CP80-67, Lone Star Gas Co.

Power Agenda—455th Meeting, July 2, 1980, Regular Meeting

I. Licensed Project Matters

P-1. Project No. 2827, the City of Redding, Calif.; Project No. 2836, the County of Tehama, Calif.

II. Electric Rate Matters

ER-1. Docket No. ER80-373, Arkansas Power & Light Co.
ER-2. Docket No. ER78-522, Virginia Electric & Power Co.
ER-3. Docket No. ER77-277, Pennsylvania Power Co., price squeeze (phase II).
ER-4. Docket No. ER76-320, the Connecticut Light & Power Co.
ER-5. Docket No. ER79-182, Commonwealth Edison Co.
ER-6. Docket Nos. ER78-229, ER78-292, ER78-313, ER78-242, ER79-245, ER79-247, ER79-250, ER79-254 and ER79-269, Indiana & Michigan Electric Co., et al.; Docket Nos. ER78-107, ER78-108, ER78-109, and ER78-219, Pennsylvania-New Jersey-Maryland interconnection, et al.; Docket No. ER78-249, Appalachian Power Co., et al.; Docket No. ER78-252, Ohio Power Co., et al.; Docket No. ER78-335, New England Power Pool, et al.; Docket No. ER79-218, Dayton Power & Light Co., et al.; Docket No. ER80-1, Indiana & Michigan Electric Co. and Central Illinois Public Service Co.; Docket No. ER80-6, Ohio Power Co. and Dayton Power & Light Co.; Docket No. ER79-456, Ohio Power Co., et al.
ER-7. Docket No. ER77-533 (phases I, II and III). Louisiana Power & Light Co.
ER-8. Docket No. EL80-8, Montaup Electric Co.

Miscellaneous Agenda—455th Meeting, July 2, 1980, Regular Meeting

M-1. Docket No. RM79-29, amendment to part 35 of the regulations under the Federal Power Act; limits for percentage adders in electric rates for transmission services
M-2. Docket No. RM79-54 and RM79-55, small power production and cogeneration facilities, rates and exemptions, qualifying status.
M-3. Docket No. RM79-79, price squeeze, procedural rules; Docket No. RM79-80, price squeeze, substantive rules.
M-4. Reserved.
M-5. Reserved.
M-6. Docket No. RM80-10, rule required under section 202 of the Natural Gas Policy Act of 1978.
M-7. Docket No. RM79-47, Statewide exemptions from incremental pricing.
M-8. Docket No. RM79-48, section 206(d) exemption for new small boilers from the incremental pricing provisions of the Natural Gas Policy Act of 1978.
M-9. Docket No. RM80-24, permanent rule defining small existing industrial boiler fuel users exempt from incremental pricing under the Natural Gas Policy Act of 1978.
M-10. Docket No. RM79-34, transportation certificates for natural gas for the displacement of fuel oil.
M-11. Docket No. RM80-38, high-cost natural gas produced from wells drilled in deep waters.
M-12. Docket No. GP80- , State of New Mexico, section 108 NGPA determination, Southland Royalty Co., State 575 No. 1 well, State Docket No. 36-26-8, JD 80-15789.
M-13. Docket No. RO79-9, Mobil Oil Corp.

Gas Agenda—455th Meeting, July 2, 1980, Regular Meeting

I. Pipeline Rate Matters

RP-1. Docket No. RP80-112, El Paso Natural Gas Co.
RP-2. (A) Docket Nos. ST79-5, ST79-16, ST79-17, ST80-10 and ST80-78, Delhi Gas Pipeline Corp.; Docket Nos. ST79-6, ST80-2, and ST80-4, Nueces Co.; Docket Nos. ST79-8, ST79-9, ST79-10, ST79-11, ST79-12, ST80-6, and ST80-102, Producers Gas Co.; Docket No. ST79-15, Nue Wells Pipeline Co.; Docket No. ST80-3, Transok Pipeline Co.; Docket Nos. ST80-94 and ST80-109, Big Sandy Gas Corp. (B) Docket No. ST79-15, Nue Wells Pipe Line Co. (C) Docket No. ST79-6, the Neuces Co.; Docket Nos. ST80-94 and ST80-109, Big Sandy Gas Corp. (D) Western Farmers Electric Cooperative.

II. Producer Matters

CI-1. Docket No. RI73-60, Mitchell Energy Corp.
CI-2. Docket No. RI79-21, Shell Oil Co.

III. Pipeline Certificate Matters

CP-1. Docket No. RP71-29, et al., (phase II) United Gas Pipe Line Co.
CP-2. Docket Nos. CP75-81 and CP75-104, High Island Offshore System.

Kenneth F. Plumb,
Secretary.

S-1252-80 Filed 6-26-80; 9:08 am
BILLING CODE 6450-85-M

7

FEDERAL HOME LOAN BANK BOARD.

TIME AND DATE: 9:30 a.m., July 3, 1980.

PLACE: 1700 G Street, NW., Amphitheater, second floor, Washington, D.C.

STATUS: Open meeting.

CONTACT PERSON FOR MORE INFORMATION: Mr. Marshall (202-377-6677).

MATTERS TO BE CONSIDERED:

Application for Branch Office—Macon Federal Savings and Loan Association, Macon, Georiga.
Application for Branch Office—First Federal Savings and Loan Association, Hendersonville, North Carolina.
Application for Branch Office—AmeriFirst Federal Savings and Loan Association, Miami, Florida.
Application for Branch Office—California Federal Savings and Loan Association, Los Angeles, California.
Application for Branch Office—United Federal Savings and Loan Association, Waycross, Georgia.
Application for Branch Office—First Federal Savings and Loan Association of Dawson County, Cozad, Nebraska.
Applications for Branch Office—Central Federal Savings and Loan Association, San Diego, California AND First Federal Savings and Loan Association of Santa Monica, Santa Monica, Califronia.
Applications for Bank Membership and Insurance of Accounts—Butterfield Savings and Loan Association, Rancho California/Temecula, California.
Applications for Bank Membership and Insurance of Accounts—Centurion Savings and Loan Association, Los Angeles, California.
Bank Membership and Insurance of Accounts—Home Savings and Loan Association, Salt Lake City, Utah.
Voluntary Termination of Insurance of Accounts and Withdrawal From Bank Membership—Perpetual Savings and Loan Association, High Point, North Carolina.
Application for Permission to Convert from a Federal Mutual to Federal Stock Form—Interamerican Savings and Loan Association of Miami, Miami, Florida.

Application for Permission to Convert from a Federal Mutual to Federal Stock Form—Victoria Federal Savings and Loan Association, Victoria, Texas.
Permission to Organize a New Federal Association—Horace Richter, *et al.*, Hamilton, Georgia.
Moratorium in Hamilton County, Ohio.
Advisory Council Travel Voucher.
Request Authority to Acquire Control of—Buckeye Federal Corporation, Columbus, Ohio Scioto Building and Loan Company, Circleville, Ohio AND Buckeye Federal Savings and Loan Association, Columbus, Ohio.

No. 361, June 26, 1980.

[S-1261-80 Filed 6-26-80; 3:33 pm]

BILLING CODE 6720-01-M

8

FEDERAL MARITIME COMMISSION.

TIME AND DATE: 2 p.m., June 27, 1980.

PLACE: Hearing Room One, 1100 L Street NW., Washington, D.C. 20573.

STATUS: Open.

MATTER TO BE CONSIDERED: Pooling Agreements in the United States/Argentine trades.

CONTACT PERSON FOR INFORMATION: Francis C. Hurney, Secretary (202) 523-5725.

[S-1255-80 Filed 6-26-80; 10:28 am]

BILLING CODE 6730-01-M

9

NATIONAL COMMISSION ON LIBRARIES AND INFORMATION SCIENCE.

(Special Meeting/Commission Retreat).

TIME: 8:00 a.m. to 10:00 p.m.; 8:00 a.m. to 10:00 p.m.; 9:00 a.m. to 12:30 p.m.

DATE: July 17, 18, and 19, respectively.

PLACE: Airlie House, Warrenton, Virginia.

STATUS: Open.

MATTERS TO BE DISCUSSED:

NCLIS Direction.
Governance (Organization/Management).
Other.
Formal Motions/Action Based on Retreat Activities.
Regular Business.

CONTACT PERSON FOR MORE INFORMATION: Douglas S. Price, Deputy Director, NCLIS, 202-653-6252.

Alphonse F. Trezza,

Executive Director.

June 25, 1980.

[S-1258-80 Filed 6-26-80; 1:59 pm]

BILLING CODE 7527-01-M

10

NATIONAL CREDIT UNION ADMINISTRATION

TIME AND DATE: 9:30 a.m., Wednesday, July 2, 1980.

PLACE: Seventh floor board room, 1776 G Street NW., Washington, D.C.

STATUS: Open.

MATTERS TO BE CONSIDERED:

1. Review of Central Liquidity Facility lending rates.
2. Proposed Final Regulations: Special Share Accounts for Federally Chartered Agent Members of the Central Liquidity Facility.
3. Report on actions taken under delegations of authority.
4. Applications for charters, amendments to charters, bylaw amendments, mergers as may be pending at that time.

RECESS: 10 a.m.

TIME AND DATE: 10:15 a.m., Wednesday, July 2, 1980.

PLACE: Seventh floor board room, 1176 G Street NW., Washington, D.C.

STATUS: Closed.

MATTERS TO BE CONSIDERED:

1. Merger. Closed pursuant to exemptions (8) and (9)(A)(ii).
2. Any items carried over from previously announced closed meeting.

FOR MORE INFORMATION CONTACT: Rosemary Brady, Secretary of the Board, telephone (202) 357-1100.

[S-1251-80 Filed 6-25-80; 5:03 p.m.]

BILLING CODE 7535-01-M

11

NATIONAL LABOR RELATIONS BOARD.

TIME AND DATE: 10:30 a.m., Monday, June 30, 1980.

PLACE: Board Conference Room, sixth floor, 1717 Pennsylvania Avenue NW., Washington, D.C. 20570.

STATUS: Closed to public observation pursuant to 5 U.S.C. Section 552(c)(2) (internal personnel rules and practices) and (c)(6) (personal information where disclosure would constitute a clearly unwarranted invasion of personal privacy).

MATTER TO BE CONSIDERED: Performance appraisals.

CONTACT PERSON FOR MORE INFORMATION: Robert Volger, Acting Executive Secretary, Washington, D.C. 20570, telephone: (202) 254-9430.

Dated, Washington, D.C., June 25, 1980.

By direction of the Board.

George A. Leet,

Associate Executive Secretary, National Labor Relations Board

[S-1254-80 Filed 6-26-80; 10:28 am]

BILLING CODE 7545-01-M

12

[Meeting No. 1246]

TENNESSEE VALLEY AUTHORITY.

TIME AND DATE: 10:15 a.m., EDT, Thursday, July 3, 1980.

PLACE: Conference Room B-32, West Tower, 400 Commerce Avenue, Knoxville, Tennessee.

STATUS: Open.

Old Business:

1. Further consideration of bids received in response to invitation No. 52 for coal for Paradise Steam Plant.

New Business:

A—Project Authorization

1. No 3517—Design additional coal receiving facilities for Paradise Steam Plant, Units 1-3.

B—Purchase Awards

1. Rejection of bids received in response to Invitation No. 169721 for indefinite quantity term contract for metallizing services for Allen, Cumberland, and Paradise Fossil Plants.
2. Req. No. 783621—Indefinite quantity term contract for crushed stone, rockfill, and filter material for Sequoyah Nuclear Plant.
3. Req. No. 108267—Galvanized structural tower steel for Volunteer-Sullivan and Phipps Bend-Sullivan 500-kV Transmission Lines.
4. Req. No. 826760—Indefinite quantity term contract for pipe, fittings, flanges, tubing, bolting material, gaskets and accessories for Hartsville and Phipps Bend Nuclear Plants.
5. Req. No. 108292—Construction of a 58.2-mile section of the Browns Ferry-Union 500-kV Transmission Line.
6. Rejection of bids received in response to Invitation No. 824835 for generator breakers for Yellow Creek Nuclear Plant.
7. Req. No 170183 (Reissue)—Load management control system for the Load Management Air-Conditioning Cycling Program.

C—Power Items

1. Contract with Electricite de France and Scandpower, Incorporated, covering arrangements for relief from royalty fees on any future purchases of gamma thermometers which are used as minotoring devices in light water reactors.
2. Supplement to menorandum governing power supply to Office of Agricultural and Chemical Development at Wilson Dam.
3. Cogeneration agreement among Caney Fork Electric Cooperative, Cumberland Manufacturing Company, and TVA.

D—Personnel Items

*Recommendations on rates of pay and certain monetary fringe benefits for salary policy employees in represented positions resulting from twenty-ninth annual salary negotiations—1980.

*2. Proposed salary adjustments for certain management schedule employees and other nonsalary policy employees.

3. Renewal of personal services contract with ITT Grinnell Corporation, Providence, Rhode Island, for services in connection with the design of onsite pipe supports for the

*Approved by individual Board members. This would give formal ratification to the Board's action.

Bellefonte Nuclear Plant, requested by the Office of Engineering Design and Construction.

4. Amendment to personal services contract with Kelly Services, Detroit, Michigan, for temporary clerical services, requested by the Office of Management Services.

5. Filling of critical-sensitive position of Manager of Engineering Design by McBeth N. Sprouse, pending completion and evaluation of a full field security investigation.

6. Filling of critical-sensitive position of Supervisor, Power Security Section (Power Security Officer) by Larry B. Bean, pending completion and evaluation of a full field security investigation.

E—Real Property Transactions

1. Grant of permanent easement to Campbell County, Tennessee, for a public highway affecting approximately 2.9 acres of TVA land on Norris Reservoir—Tract XTNR-103H.

1. Modification of deed to approximately 7.2 acres of Pickwick Reservoir land in Colbert County, Alabama, to permit construction of a subdivision and access road—Tract XPR-247.

3. Sale by negotiation to Frank J. Lambert of access rights over Lot 9R in the Sequoyah Landing Subdivision located on Norris Reservoir in Anderson County, Tennessee—Tract XNR-601:8AA.

4. Transfer to the Department of the Army, Corps of Engineers, of certain flowage easement rights affecting a 125-acre portion of a tract of land on the Ohio River in Union County, Kentucky, acquired as a barge terminal site for receipt of Camp Breckinridge coal—Tract CBCR-2.

5. Land exchange affecting 6.06 acres of Cherokee National Forest land in Polk County, Tennessee, previously transferred by TVA to the United States Department of Agriculture.

F—Unclassified

1. Contracts with the Tennessee Valley Capital Corporation (TVCC) and Valley Development Corporation (VDC) for operation of and assistance to the TVA-sponsored Small Business Investment Company (MESBIC).

2. Interagency agreement with U.S. Department of Energy for assistance in evaluation of design of sampling equipment for TVA nuclear plants.

3. Revised TVA policy code relating to employee training and development.

CONTACT PERSON FOR MORE INFORMATION: Craven Crowell, Director of Information, or a member of his staff can respond to requests for information about this meeting. Call (615) 632-3257, Knoxville, Tennessee. Information is also available at TVA's Washington Office (202) 245-0101.

[Dated: June 26, 1980.

[S-1260-80 Filed 6-26-80; 3:18 pm]

BILLING CODE 8120-01-M

Reader Aids

Federal Register

Vol. 45, No. 127

Monday, June 30, 1980

INFORMATION AND ASSISTANCE

Questions and requests for specific information may be directed to the following numbers. General inquiries may be made by dialing 202-523-5240.

Federal Register, Daily Issue:

202-783-3238	Subscription orders and problems (GPO)
	"Dial-a-Reg" (recorded summary of highlighted documents appearing in next day's issue):
202-523-5022	Washington, D.C.
312-663-0884	Chicago, Ill.
213-688-6694	Los Angeles, Calif.
202-523-3187	Scheduling of documents for publication
523-5240	Photo copies of documents appearing in the Federal Register
523-5237	Corrections
523-5215	Public Inspection Desk
523-5227	Index and Finding Aids
523-5235	Public Briefings: "How To Use the Federal Register."

Code of Federal Regulations (CFR):

523-3419	
523-3517	
523-5227	Index and Finding Aids

Presidential Documents:

523-5233	Executive Orders and Proclamations
523-5235	Public Papers of the Presidents, and Weekly Compilation of Presidential Documents

Public Laws:

523-5266 -5282	Public Law Numbers and Dates, Slip Laws, U.S. Statutes at Large, and Index
275-3030	Slip Law Orders (GPO)

Other Publications and Services:

523-5239	TTY for the Deaf
523-5230	U.S. Government Manual
523-3408	Automation
523-4534	Special Projects
523-3517	Privacy Act Compilation

FEDERAL REGISTER PAGES AND DATES, JUNE

37175-37396 2
37397-37680 3
37681-37800 4
37801-38022 5
38023-38334 6
38335-39236 9
39237-39492 10
39493-39788 11
39789-40092 12
40093-40560 13
40561-40962 16
40963-41118 17
41119-41388 18
41389-41618 19
41619-41894 20
41895-42234 23
42235-42588 24
42589-43150 25
43151-43364 26
43365-43680 27
43681-44244 30

CFR PARTS AFFECTED DURING JUNE

At the end of each month, the Office of the Federal Register publishes separately a list of CFR Sections Affected (LSA), which lists parts and sections affected by documents published since the revision date of each title.

1 CFR

51 44090
465 37397

3 CFR

Administrative Orders:
Presidential Determination:
No. 80-19 of May 28, 1980 37681
Reorganization Plans:
No. 1 of 1980 40561
Proclamations:
3279 (Amended by Proc. 4766) 41899
4744 (Revoked by Proc. 4766) 41899
4762 39237
4762 (Revoked by Proc. 4766) 41899
4763 41119
4764 41621
4765 41895
4766 41899
4767 42235
Executive Orders:
12078 (Amended by EO 12219) 41897
12216 41619
12217 41623
12218 41625
12219 41897

4 CFR

Proposed Rules:
417 43202

5 CFR

213 ..... 38023-38024, 41627
315 43365
316 43365
351 41627
410 40963
2504 41121
Proposed Rules:
Ch. 1 37610
330 39277
352 37452
536 40990
720 38061

6 CFR

705 ..... 37397, 38335, 41304, 42589
706 41304
707 41304

7 CFR

2 43365
10 37175
273 40093
282 40094
301 ..... 38024, 43366, 43368
318 42237
711 37398
723 40095
724 40095
725 ..... 40096, 40097
726 ..... 40095, 42242
908 ..... 37801, 38339, 39789, 41389, 43151
910 ..... 37683, 38033, 40097, 41628, 42242, 43369
911 39854
913 40565
922 42589
923 38034
925 40565
944 39854
946 42590
947 37178
971 41389
985 41901
991 41901
1004 39239
1071 43369
1073 43369
1097 43369
1102 43369
1104 43369
1106 43369
1108 43369
1120 43369
1126 43369
1132 43369
1138 43369
1207 41391
1438 39493
1474 42244
1701 ..... 37399, 40098, 40963
1804 39789
1821 39789
1822 39789
1861 43151
1872 39789
1901 39789
1924 39789
1933 39789
1941 43370
1942 39789
1943 39789
1944 39789
1945 39789
1950 43151
1980 41628
3100 41583
Proposed Rules:
210 43422
220 43422
250 42303
403 43771
408 43776
411 41640
438 43783

725 ... 39277
760 ... 37453
910 ... 42313
916 ... 38386, 41962
917 ... 38062, 38387
921 ... 42313
923 ... 42625
924 ... 42314
928 ... 43789
930 ... 38063
945 ... 42626
982 ... 42315
999 ... 39507
1007 ... 40606
1493 ... 37854
1701 ... 37454, 38064, 41646
1980 ... 41647
2842 ... 38064

8 CFR

204 ... 41392
207 ... 37392
208 ... 37392
209 ... 37392
238 ... 38339, 40964, 40965
242 ... 41392
245 ... 37392
292 ... 43681
343b ... 38340

9 CFR

3 ... 37616
51 ... 40965, 43676
78 ... 38035
83 ... 40098
92 ... 38036
113 ... 40099

Proposed Rules:

83 ... 38071
318 ... 43425
325 ... 40129

10 CFR

30 ... 41393
32 ... 38340
35 ... 39829, 41393
50 ... 40101
51 ... 40101
73 ... 37399
95 ... 37410
140 ... 37410
205 ... 37683, 42246
210 ... 40104
212 ... 38038, 39240, 40104, 40106, 41902
430 ... 43262
445 ... 37685
500 ... 38276
501 ... 38276
502 ... 38276
503 ... 38302
504 ... 40966
505 ... 38302
506 ... 40966
507 ... 38276
570 ... 41330, 43154
1040 ... 40514

Proposed Rules:

34 ... 39856
71 ... 39519
210 ... 43202
211 ... 37697, 40078, 42222
212 ... 37697, 42222, 43202, 44238
430 ... 43976, 44086
455 ... 39856
474 ... 39520
503 ... 42190
504 ... 42190
506 ... 42190
622 ... 41649
624 ... 41649

11 CFR

100 ... 43371
106 ... 43371
110 ... 43371
140 ... 43371
141 ... 43371
142 ... 43371
143 ... 43371
144 ... 43371
145 ... 43371
146 ... 43371
9001 ... 43371
9002 ... 43371
9003 ... 43371
9004 ... 43371
9005 ... 43371
9006 ... 43371
9007 ... 43371

12 CFR

201 ... 40108, 41629
204 ... 39494
217 ... 37685, 41124
220 ... 40967, 40968
229 ... 39495
341 ... 37179
343 ... 37179
522 ... 40108
531 ... 40109
590 ... 38342, 43681
605 ... 39495
614 ... 39496
701 ... 39241, 41903
1204 ... 37801–37803, 40109

Proposed Rules:

Ch. VII ... 41438
7 ... 40613
201 ... 40130
211 ... 41153
226 ... 41437
534 ... 43387
543 ... 40132
552 ... 40132
618 ... 39507
701 ... 39279, 42628
1204 ... 38072, 38388

13 CFR

101 ... 43387
111 ... 39496
305 ... 39242

Proposed Rules:

Ch. III ... 37972
Ch. V ... 37972
120 ... 37454

14 CFR

11 ... 38342
21 ... 38342
25 ... 38342, 41586, 43154
29 ... 38342
37 ... 38342
39 ... 37179–37181, 37805–37811, 38349, 39829–39833, 40571, 41394, 41905, 43154–43158, 43688–43697
61 ... 44176
71 ... 37811, 38352, 39835–39837, 40572, 41400, 41906–41913, 43159, 43698, 43699
73 ... 38352, 41913
75 ... 43160
91 ... 38342, 43160
95 ... 41914
97 ... 37181, 39837, 43699
121 ... 38342, 41586, 43154, 43160, 44176
127 ... 38342, 41586, 43154, 43160
135 ... 38342, 43160
159 ... 40572
204 ... 42593
207 ... 40572
208 ... 40574
212 ... 40575
214 ... 40575
249 ... 37812
399 ... 40969, 42254
1203 ... 43388

Proposed Rules:

Ch. I ... 38073, 41439, 41962
1 ... 43202
27 ... 43202
29 ... 43202
33 ... 43202
39 ... 37221, 37222, 38402, 40615, 43790–43792
43 ... 43202
45 ... 43202
61 ... 43202
71 ... 37858, 38404, 39857, 40616, 41449, 41965
91 ... 43202, 43203
121 ... 41596, 43202
127 ... 43202
133 ... 43202
135 ... 43202
139 ... 39857
221 ... 42317
222 ... 42318
250 ... 42317
255 ... 42317, 42629
298 ... 42317
385 ... 42318
399 ... 40994
1252 ... 40994

15 CFR

10 ... 41401
17a ... 41153
315 ... 42214
368 ... 40575
370 ... 37183
371 ... 43139
373 ... 37415, 43139
374 ... 37415
375 ... 43139
376 ... 37415, 43139
378 ... 43139
379 ... 37183, 37435, 43139
385 ... 37415, 43010, 43139
386 ... 37183
399 ... 37415, 43010, 43139
615 ... 42214
911 ... 43701

Proposed Rules:

Ch. I ... 37972
Ch. II ... 37972
Ch. III ... 37972
Ch. VIII ... 37972
Ch. XII ... 37972
19 ... 37374
934 ... 43205
938 ... 39507, 39511

16 CFR

1 ... 39244
2 ... 39244
3 ... 39244
4 ... 39244
13 ... 37686, 38039, 38352, 43388
305 ... 40974, 43162
460 ... 37674
1508 ... 37418

Proposed Rules:

13 ... 39865, 41650
439 ... 41156
705 ... 37386
1405 ... 39434

17 CFR

200 ... 40975
240 ... 37687, 39838, 41125
241 ... 41920
249 ... 39838
256 ... 41135

Proposed Rules:

1 ... 42321, 42633
12 ... 42321
16 ... 39280
140 ... 42324
211 ... 40134
229 ... 40134
230 ... 42642
240 ... 40134, 40145, 41156
249 ... 40134, 40145
270 ... 38407

18 CFR

1 ... 38354
141 ... 37420, 38354
260 ... 37812
271 ... 37185
281 ... 39497
282 ... 37185
292 ... 38040

Proposed Rules:

3 ... 41608
12 ... 41608
271 ... 41449
281 ... 39283
282 ... 38080, 40617
284 ... 41450

19 CFR

22 ... 39244
54 ... 38040, 38355
103 ... 40975
171 ... 40975
353 ... 39498

20 CFR

404 ... 41931
651 ... 39454
653 ... 39454
658 ... 39454

Proposed Rules:

Ch. I ... 37648
Ch. III ... 40356
Ch. IV ... 37648
Ch. V ... 37648
Ch. VI ... 37648
Ch. VII ... 37648
404 ... 39309, 42647
416 ... 41453, 43218

21 CFR

Ch. I.....40976, 42264, 43389
14.....41630
81.....42255
101.....37420
102.....39247
103.....37422
145.....43389, 43391
146.....39251, 43394
155.....43394
175.....39251
177.....39252
207.....38042
310.....43400
429.....40110
431.....40110
444.....42256
510.....37424, 38048, 41630, 42260
514.....40110
522.....37425, 43401
524.....43402
556.....42262
540.....43403
558.....37424, 38048–38049, 41630, 42262
561.....41932
573.....38049
1000.....40976
1308.....41933, 42264

Proposed Rules:

Ch. I.....40356
Ch. II.....40576
103.....40153
105.....41652
163.....40999
310.....37455
330.....41653
561.....41157
589.....40999
640.....40999
1030.....40999

22 CFR

41.....39499
208.....37688

Proposed Rules:

6.....37456
6f.....37456
171.....37456

23 CFR

Proposed Rules

625.....40062, 41600
646.....40062
655.....40062, 41600

24 CFR

203.....41935
207.....42604
220.....38356
234.....41935
300.....41631
390.....40556
570.....42604
811.....41382
841.....40868
865.....41936
888.....40111
1710.....40474
1715.....40474
1720.....40474
1730.....40474

Proposed Rules:

115.....37697, 40999
203.....38410, 41158
207.....42687
221.....41158
222.....41158
235.....41158
570.....40155, 40954
866.....43218
869.....43793
888.....40155

25 CFR

221.....37688
256.....41632
700.....41408

Proposed Rules:

231.....43219
251.....42332
258.....43431

26 CFR

1.....38050, 40113, 40979, 42606
7.....38050
31.....39499

Proposed Rules:

1.....39512, 39869, 42688
48.....38411

27 CFR

4.....40538
5.....40538
7.....40538
9.....41632
19.....41838

Proposed Rules:

19.....38258, 41850
70.....38258
240.....38258
245.....38258
250.....38258
270.....38258, 38271
275.....38258, 38271

28 CFR

0.....39841, 43702, 43703
16.....43702, 43703
20.....40114
42.....37620, 43703
43.....39841
45.....43703
513.....44238
522.....44238
540.....44238
570.....44238
571.....44238

Proposed Rules:

18.....43436
22.....40156
23.....40156
42.....41001
62.....40159

29 CFR

40.....40985
42.....39486
102.....37425
697.....40601, 40985
1602.....41135
1610.....40603
1613.....41634
1625.....43704
1910.....41634
1990.....43403
2530.....40987
2610.....43164

Proposed Rules:

Subtitle A.....37648
Ch. II.....37648
Ch. IV.....37648
Ch. V.....37648
Ch. XVII.....37648
Ch. XXV.....37648
Ch. XXVI.....41653
4.....42332
1613.....38083, 43794
1910.....40166, 41012
1926.....41015
2550.....38084
2610.....38415

30 CFR

Ch. II.....40619
211.....41410
221.....41410
223.....41410
225.....41410
225a.....41410
226.....41410
231.....41410
241.....41410
250.....37816–37817
270.....41410
271.....41410
715.....39446
816.....37818, 39446
817.....39446
943.....41136, 41937

Proposed Rules:

Ch. I.....37648
Ch. VII.....37223, 37697, 38088, 41158–41164, 41456, 41654, 41969–41981, 43220, 43221, 43223, 43225
55.....38087
56.....38087
57.....38087
70.....39310
71.....39310, 42333
90.....39310, 42333
700.....42333
701.....42333
715.....40166
716.....39448, 40166
780.....41166
785.....39448
800.....43437
801.....43437
805.....43437
806.....43437
807.....43437
808.....43437
816.....40166
817.....40166
826.....40166
884.....41659
926.....41659

31 CFR

15.....39841
103.....37818
315.....41137
353.....41137
535.....37679, 37688

Proposed Rules:

315.....43658

32 CFR

101.....41138, 42608
199.....43407
205.....41138, 42608
286b.....43409
293.....41138
536.....39253
562.....39502
706.....41412, 43165
716.....43165
819b.....43410
841.....43410
888a.....39502
907.....39502
1611.....40577
1612.....40577
1613.....40577
1615.....40577
1617.....40577
1619.....40577
1621.....40577

Proposed Rules:

143.....43438
1611.....40621
1612.....40621
1613.....40621
1615.....40621
1617.....40621
1619.....40621
1621.....40621

32A CFR

Proposed Rules:

Ch. VI.....37972

33 CFR

Ch. 1.....43704
100.....41940
110.....43165
117.....39845, 39846, 41413, 41941
147.....37186
154.....43705
155.....43705
157.....43705
162.....43166
165.....37187, 41941, 43165

Proposed Rules:

110.....41458, 41981
117.....39871, 43226
128.....40621
183.....38417
235.....39412

34 CFR

5b.....37426
30.....37426
73.....37426
100.....37426
104.....37426
106.....37426

36 CFR

115.....43717
251.....38324, 43167
920.....38056
1120.....42608
1227.....43167

37 CFR

201.....41414

Proposed Rules:

Ch. I.....37972

38 CFR

17.....38356, 39846, 41942, 43169

21 ... 43169, 43170
36 ... 38056
Proposed Rules:
Ch. I ... 41169
21 ... 41661

39 CFR

10 ... 40114, 41138
111 ... 37426–37427, 40114, 42615, 42616
221 ... 43718
224 ... 43718
912 ... 43719
Proposed Rules:
10 ... 42688
111 ... 38419

40 CFR

52 ... 37188, 37192, 37689, 37821, 39503, 40578, 40579, 40987, 41942, 42265–42283, 43411
55 ... 41415
57 ... 42514
60 ... 41852, 44202
62 ... 37431, 43411
80 ... 37197
81 ... 39255, 42283, 43412
86 ... 40030, 41943, 44188
122 ... 41418, 42472
125 ... 41418
141 ... 41140
146 ... 42472
162 ... 39848
180 ... 39257, 39503, 41419, 41946, 42618, 43720
403 ... 41419
418 ... 37198
423 ... 37432
426 ... 37198
432 ... 37198
434 ... 43413
712 ... 43720
762 ... 43721
Proposed Rules:
Ch. I ... 44106
44 ... 42375
51 ... 37466
52 ... 37224, 37699, 38419, 39310, 40167, 40169, 40623, 41016, 41018, 41983, 42335, 42689, 43228–43231, 43440, 43794
58 ... 43232
60 ... 39766
80 ... 37225
81 ... 41018
86 ... 38422
112 ... 40174
162 ... 38087, 39311
169 ... 41024
173 ... 40175
180 ... 37700, 40175, 41171
192 ... 41459
702 ... 43148

41 CFR

Ch. 1 ... 39504
Ch. 14 ... 39504
Ch. 101 ... 37199, 37432
Ch. 18 ... 43723, 43732, 43740, 43741
1–15 ... 39848
3–4 ... 37693
101–11 ... 37433
101–17 ... 37199
101–18 ... 37199
101–19 ... 37199
101–25 ... 41947
101–26 ... 41947
101–36 ... 43415
101–45 ... 37693, 38369
105–61 ... 39258
Proposed Rules:
Ch. 25 ... 39871

42 CFR

57 ... 40581, 41420, 41948
59 ... 37433
405 ... 41635
421 ... 42174
Proposed Rules:
Ch. I ... 40356
Ch. II ... 40356
Ch. III ... 40356
Ch. IV ... 40050, 40356
405 ... 37858, 41794
441 ... 37858
447 ... 37466, 39872, 41661
455 ... 43441
481 ... 41794
482 ... 41794

43 CFR

2710 ... 39416
2730 ... 39416
2750 ... 39416
2760 ... 39416
Proposed Rules:
2091 ... 41860
2200 ... 41860
2210 ... 41860
2220 ... 41860
2230 ... 41860
2240 ... 41860
2250 ... 41860
2260 ... 41860
2270 ... 41860
3800 ... 41024
Public Land Orders:
5726 ... 37438
5727 ... 37439, 40115
5728 ... 37837
5729 ... 38369
5730 ... 41420

44 CFR

2 ... 41421
10 ... 41141
64 ... 37207, 41146, 42290, 42300
65 ... 37442, 37694, 39258, 41148
67 ... 37208–37209, 43187, 43417
70 ... 38370–38379, 41948
80 ... 41949
81 ... 41949
82 ... 41949
83 ... 41949
205 ... 37440
311 ... 43199
Proposed Rules:
67 ... 37226, 37227, 37861, 39312–39315, 40624, 40625, 42340, 42691, 42692, 42705, 43233, 43234
350 ... 42341

45 CFR

3 ... 41820
74 ... 37666, 38380
100c ... 37442
150 ... 42284
168 ... 42572
174 ... 42572
175 ... 42572
176 ... 42572
177 ... 42572
190 ... 42572–42586
304 ... 41428
1063 ... 39849
1067 ... 39849
1069 ... 41956
1211 ... 39270
Proposed Rules:
Subtitle A ... 40356
Subtitle B ... 40356
Ch. VI ... 39871
63 ... 37700
100b ... 39708
116 ... 39712
116a ... 39712
206 ... 43235
233 ... 43235
1050 ... 37867
1171 ... 41661
1336 ... 39316

46 CFR

66 ... 38384, 41429
283 ... 37442
502 ... 43758
527 ... 37694
536 ... 38057
Proposed Rules:
Ch. II ... 37972
Ch. IV ... 37703
531 ... 41024
536 ... 41024, 42721

47 CFR

0 ... 39850, 41149, 42619
1 ... 42619
19 ... 39850
64 ... 40115, 41429, 42622
73 ... 37210, 37838, 38057, 41149, 43172, 43760
74 ... 37839
78 ... 41958
81 ... 41635
90 ... 43417, 43418
95 ... 42623
97 ... 40116, 40117
Proposed Rules:
Ch. I ... 41986, 43441
2 ... 37237, 42347, 42724
15 ... 42347, 43442
21 ... 42724
22 ... 37237
67 ... 41459
68 ... 37704
73 ... 37238–37246, 37468, 37868–37869, 40176–40186, 40626, 41171, 42725–42753
74 ... 40187, 42724
76 ... 43814
87 ... 40188
90 ... 37237, 42724
94 ... 42724
97 ... 40192

48 CFR

Proposed Rules:
3 ... 43236
7 ... 43236
48 ... 43236

49 CFR

171 ... 43761
172 ... 43761
173 ... 43761
174 ... 43761
176 ... 43761
177 ... 43761
229 ... 39851
450 ... 37212
451 ... 37212
452 ... 37212
453 ... 37212
571 ... 38380, 40585, 41959
572 ... 40595, 43352
800 ... 37842
1033 ... 37219, 37220, 37843–37845, 38057–38059, 38382, 39275, 39852, 40596, 40597, 40599, 41429, 41637, 41959–41960, 42286–42289, 43764, 43766
1041 ... 37218
1047 ... 39853
Proposed Rules:
Ch. X ... 39316, 39317
71 ... 38423, 43238
171 ... 40627
391 ... 39872
571 ... 41468
572 ... 43355
575 ... 37870
1033 ... 41469, 43446
1047 ... 39874
1056 ... 39519
1100 ... 39317
1102 ... 42754
1320 ... 39519
1321 ... 39519
1322 ... 39519
1323 ... 39519
1324 ... 39519

50 CFR

20 ... 37847, 43419
222 ... 39875
223 ... 39875
224 ... 39875
225 ... 39875
226 ... 39875
227 ... 39875
230 ... 37451
255 ... 37852
260 ... 39275
285 ... 40118
371 ... 43768
611 ... 37695, 39876, 41433, 41961
672 ... 41434
Proposed Rules:
Ch. II ... 37972
Ch. VI ... 37972
17 ... 40958, 41172, 41322, 41326, 43358
91 ... 39317
216 ... 41173
651 ... 41986
661 ... 37870
676 ... 41987

AGENCY PUBLICATION ON ASSIGNED DAYS OF THE WEEK

The following agencies have agreed to publish all documents on two assigned days of the week (Monday/Thursday or Tuesday/Friday).

This is a voluntary program. (See OFR NOTICE 41 FR 32914, August 6, 1976.)

Monday	Tuesday	Wednesday	Thursday	Friday
DOT/SECRETARY	USDA/ASCS		DOT/SECRETARY	USDA/ASCS
DOT/COAST GUARD	USDA/APHIS		DOT/COAST GUARD	USDA/APHIS
DOT/FAA	USDA/FNS		DOT/FAA	USDA/FNS
DOT/FHWA	USDA/FSQS		DOT/FHWA	USDA/FSQS
DOT/FRA	USDA/REA		DOT/FRA	USDA/REA
DOT/NHTSA	MSPB/OPM		DOT/NHTSA	MSPB/OPM
DOT/RSPA	LABOR		DOT/RSPA	LABOR
DOT/SLSDC	HHS/FDA		DOT/SLSDC	HHS/FDA
DOT/UMTA			DOT/UMTA	
CSA			CSA	

Documents normally scheduled for publication on a day that will be a Federal holiday will be published the next work day following the holiday.

Comments on this program are still invited. Comments should be submitted to the Day-of-the-Week Program Coordinator, Office of the Federal Register, National Archives and Records Service, General Services Administration, Washington, D.C. 20408

REMINDERS

The "reminders" below identify documents that appeared in issues of the **Federal Register** 15 days or more ago. Inclusion or exclusion from this list has no legal significance.

Rules Going Into Effect Today

AGRICULTURE DEPARTMENT

Animal and Plant Health Inspection Service—

36358 5-30-80 / Importation of animals; brucellosis requirements

ENERGY DEPARTMENT

Federal Energy Regulatory Commission—

37812 6-5-80 / Order revising report of gas supply and requirements

HOUSING AND URBAN DEVELOPMENT DEPARTMENT

Assistant Secretary for Housing—Federal Housing Commissioner—

36395 5-30-80 / Nursing homes and intermediate care facilities; mortgage insurance eligibility requirements; definitions

INTERIOR DEPARTMENT

Geological Survey—

29280 5-2-80 / Changes in procedures for oil and gas and sulphur operations in the Outer Continental Shelf

LEGAL SERVICES CORPORATION

36415 5-30-80 / Eligibility for legal assistance

TREASURY DEPARTMENT

Customs Service—

36376 5-30-80 / Imports of petroleum and petroleum products

List of Public Laws

Last Listing June 23, 1980

Note: No public bills which have become law were received by the Office of the Federal Register for inclusion in today's List of Public Laws.

6-30-80
Vol. 45—No. 127
BOOK 2:
PAGES
43973-44244

Federal Register

Book 2 of 2 Books
Monday, June 30, 1980

43976 Part II—DOE/OSCE:
Energy Conservation Programs for Consumer Products

44090 Part III—Office of the Federal Register:
Approved Incorporations by Reference in Titles 28-41

44106 Part IV—EPA:
Improving Government Regulations; Agenda of Regulations

44176 Part V—DOT:
Advanced Simulation Provisions

44188 Part VI—EPA:
Control of Air Pollution From New Motor Vehicle Engines—Alternative Durability Program

44202 Part VII—EPA:
Primary Aluminum Industry; Amendments to the Performance Standards for New Stationary Sources

44220 Part VIII—Justice/Prisons:
Control, Custody, Care, Treatment and Instruction of Prison Inmates

44238 Part IX—DOE/ERA:
Mandatory Petroleum Price Regulations; Equal Application Rule

federal register

Monday
June 30, 1980

Part II

Department of Energy

Office of Conservation and Solar Energy

Energy Conservation Program for Consumer Products

DEPARTMENT OF ENERGY

Office of Conservation and Solar Energy

10 CFR Part 430

Energy Conservation Program for Consumer Products

AGENCY: Department of Energy.

ACTION: Proposed rule.

SUMMARY: Proposed Rulemaking, Public Meeting and Public Hearings Regarding Energy Efficiency Standards for Refrigerators and Refrigerator-Freezers, Freezers, Clothes Dryers, Water Heaters, Room Air Conditioners, Home Heating Equipment not including Furnaces, Kitchen Ranges and Ovens, Central Air Conditioners, and Furnaces.

The Energy Policy and Conservation Act, as amended by the National Energy Conservation Policy Act, requires that the Department of Energy prescribe energy efficiency standards for consumer products. The Department is today proposing to amend 10 CFR Part 430 to include energy efficiency standards for classes of refrigerators and refrigerator-freezers, freezers, clothes dryers, water heaters, room air conditioners, home heating equipment not including furnaces, kitchen ranges and ovens, central air conditioners and furnaces. The rule proposed today establishes intermediate and final energy efficiency standards for the above-mentioned covered products. The proposed rule also includes amendments to the State manufacturer preemption petitions found at Subpart D, a new Subpart E containing procedures for small business exemptions, and a new Subpart F containing certification and enforcement procedures.

The purpose of this notice of proposed rulemaking is to provide interested persons an opportunity to comment upon the proposed rule, and to invite interested persons to participate in the energy efficiency standards rulemaking process.

DATES: Written comments on this proposed rule must be received by the Department by August 29, 1980 in order to be included in the docket.

Public Meeting, Washington, D.C.: Pursuant to section 336(a)(2) of the Act, there will be a public meeting in Washington, D.C., at which interested parties may present question(s) regarding this rule for the purpose of clarification of issues. Written question(s) for clarification must be submitted to DOE no later than 5:00 p.m., July 8, 1980. Persons attending this meeting will also have an opportunity to question those persons making written or oral presentations with respect to disputed issues of material fact. The public meeting will be held on July 16, 1980 at the time and place noted below.

Public Hearing, Washington, D.C.: The Washington, D.C. public hearing will be held August 11 through 15, 1980, and will continue into the week of August 18, 1980 as necessary in order to accommodate all interested speakers; requests to speak must be received by the Department no later than 5:00 p.m., July 18, 1980; speakers will be notified by 5:00 p.m., July 28, 1980; written statements must be received by the Department no later than 5:00 p.m., August 4, 1980. Interested parties are given an opportunity for oral presentations of views, data and arguments on the proposed rule.

Public Hearing, Chicago, Illinois: The Chicago, IL public hearing will be held beginning August 25, 1980, and will continue throughout that week as necessary in order to accommodate all interested speakers; requests to speak must be received by the Department no later than 5:00 p.m., July 28, 1980; speakers will be notified by 5:00 p.m., August 4, 1980; written statements must be received by the Department no later than 5:00 p.m., August 18, 1980.

ADDRESSES: Written comments, requests to speak at the hearings, and statements are to be submitted to: Carol A. Snipes (Hearing Procedures), U.S. Department of Energy, Office of Conservation and Solar Energy, Office of Hearings and Dockets, Energy Efficiency Standards for Consumer Products, Docket No. CAS-RM-78-110, Mail Station 6B-025, Forrestal Building, 1000 Independence Avenue, S.W., Washington, D.C. 20585.

The public meeting is to be held at: Room 3000A, Federal Building, 12th and Pennsylvania, Washington, D.C., on July 16, 1980 at 9:00 a.m. The two public hearings are to be held at: Room 3000A, Federal Building, 12th and Pennsylvania, Washington, D.C., on August 11-22, 1980, at 9:00 a.m. and Everett McKinley Dirksen Federal Building, 219 South Dearborn Street, Chicago, IL, on August 25-29, at 9:00 a.m.

FOR FURTHER INFORMATION CONTACT:

James A. Smith, U.S. Department of Energy, Office of Conservation and Solar Energy, Division of Buildings and Community Systems, Consumer Products Efficiency Branch, Room GH-065, Mail Station 6B-025, Forrestal Building, 1000 Independence Avenue, S.W., Washington, D.C. 20585, (202) 252-9127.

Carol A. Snipes (Hearing Procedures), U.S. Department of Energy, Office of Conservation and Solar Energy, Office of Hearings and Dockets, Mail Station 6B-025, Forrestal Building, 1000 Independence Avenue, S.W., Washington, D.C. 20585, (202) 252-9319.

Eugene Margolis, Esq., U.S. Department of Energy, Office of General Counsel, Room 1E-254, Mail Station 6A-152, Forrestal Building, 1000 Independence Avenue, S.W., Washington, D.C. 20585, (202) 252-9510.

SUPPLEMENTARY INFORMATION

Table of Contents

1. Introduction
1.1 Purpose and Scope of This Notice
1.2 Authority
1.2.1 Background
1.2.2 Statutory Objectives
1.3 Planned Regulatory Action
1.3.1 Introduction
1.3.2 Criteria for Selection of Classes
1.3.3 Determination of the Maximum Technologically Feasible Energy Efficiency Level by Product Class
1.3.4 Method of Specifying Energy Efficiency Levels
1.3.5 Planned Phase-In of Standards
2. Definitions
3. Advance Notice
3.1 Discussion of Industry Data
3.2 Comments Received in Response to Advance Notice
4. Determination of Energy Efficiency Levels
4.1 Refrigerators and Refrigerator-Freezers
4.2 Freezers
4.3 Clothes Dryers
4.4 Water Heaters
4.5 Room Air Conditioners
4.6 Home Heating Equipment not Including Furnaces
4.7 Kitchen Ranges and Ovens
4.8 Central Air Conditioners
4.9 Furnaces
5. Macro-Economic Analysis
5.1 Introduction
5.2 Value Model Overview
5.3 Economic Sub-Models Within the Value Model
5.4 Economic Impacts of Regulation
5.5 Acceptability Criteria for Standard Selection
6. Certification and Enforcement
7. Effect on Other Law
8. Small Business Exemptions
9. Environmental Assessment
10. Regulatory Analysis
10.1 Major Alternatives
10.2 Economic Impact on the Proposed Standards
10.3 Urban and Community Impact Analysis
10.4 Significant Conservation of Energy
10.5 Summary
11. Public Comment Procedure
11.1 Consumer Participation
11.2 Comments on Issues
11.3 Comment Procedures
11.4 Oral Presentation: Conduct of Meeting
11.5 Oral Presentation: Conduct of Hearings

1. Introduction

1.1 Purpose and Scope of This Notice

Section 325 of the Energy Policy and Conservation Act (EPCA) (P.L. 94-163),

as amended by section 422 of the National Energy Conservation Policy Act (NECPA) (P.L. 95-619), requires that the Department of Energy (DOE) prescribe energy efficiency standards for the types of consumer products listed in section 322(a) of the Act.[1] These consumer products are sometimes referred to as "covered products." Standards for nine of these covered products are required by section 325, as amended, to be published in the Federal Register no later than January 2, 1981. The nine covered products given priority by the Act, and for which a rule is hereby proposed today, are refrigerators and refrigerator-freezers, freezers, clothes dryers, water heaters, room air conditioners, home heating equipment not including furnaces, kitchen ranges and ovens, central air conditioners (cooling only), and furnaces.

DOE's first step in prescribing energy efficiency standards for the nine covered products was to publish an advance notice of proposed rulemaking in the Federal Register of January 2, 1979 (44 FR 49). Section 325(i)(3) of the Act requires DOE, as a subsequent step in establishing energy efficiency standards for consumer products, to publish a notice of proposed rulemaking, proposing energy efficiency standards for each type or class of covered product, and to invite comments from interested persons relevant to establishing the energy efficiency standards. This notice constitutes the second step.

Because of the impact of the standards on the public, DOE has provided in Section 11 of this notice an opportunity for public comment, pursuant to section 325(i)(3) of the Act, on the following matters, among others:

(A) Whether the proposed standards are economically justified;

(B) Whether the standard will achieve the maximum improvement in energy efficiency which is technologically feasible;

(C) If the standard does not achieve such improvement, whether the reasons for not achieving such improvement are adequate; and

(D) Whether the proposed rule should prescribe a level of energy efficiency which is higher or lower than that which would otherwise apply in the case of any group of products within the type (or class) that is subject to the proposed standard.

DOE expects that the comments received as a result of this notice will provide additional technical and economic information which will assist DOE in developing a final rule that is expected to be prescribed in December 1980.

Accordingly, this notice presents a discussion of DOE's basis for the proposed standards and the process for implementing the regulation. Ensuing sections deal with the legislative background, the standards implementation process, the phase-in period for standards, a discussion of the comments received as a result of the advance notice, a discussion of the covered products and classes to which the proposed standards will apply, the certification and enforcement procedures proposed, a summary of the basis for arriving at maximum technologically feasible efficiency levels for each class of product, a summary of the basis for arriving at the energy efficiency standards (intermediate and final) for each class of product, a discussion of state/manufacturer preemption petitions, small business exemptions, and a request for comments on various standards-related issues. In support of this proposed rule, the Department has developed five Technical Support Documents. These documents provide detailed information on important aspects of the proposed rule and are referred to throughout the preamble.

Number and Title

1—Draft Regulatory Analysis
2—Environmental Assessment
3—Certification and Enforcement Document
4—Economic Analysis Document
5—Engineering Analysis Document

Copies of the proposed rule and all of the Technical Support Documents, as well as other documents specifically identified in this proposed rule, may be obtained from and will be available for public review under Docket No. CAS-RM-78-110 at the Office of Hearings and Dockets at the address specified at the begining of this notice or the DOE Freedom of Information Office, between the hours of 8:00 a.m. and 4:30 p.m., Monday through Friday, except Federal holidays at the following address: Department of Energy, Freedom of Information Reading Room, Room 5B-180, Forrestal Building, 1000 Independence Avenue, SW., Washington, D.C. 20585, (202) 252-6020.

A limited supply of the proposed rule and Technical Support Documents will also be available upon request through August 29, 1980 from the Office of Hearings and Dockets between the hours of 9:00 a.m. and 5:00 p.m. Monday through Friday, except Federal holidays at the following address: Department of Energy, Office of Hearings and Dockets, Room 1F-085, Forrestal Building, Mail Station 6B-025, 1000 Independence Avenue, SW., Washington, D.C. 20585, (202) 252-9319.

Interested persons are invited to provide views, written presentations of data, and arguments relevant to establishing the interim and final energy efficiency standards for the nine types of consumer products.

1.2 Authority

1.2.1 Background. The energy conservation program for consumer products is designed to require manufacturers to produce, and consumers to purchase, significantly more efficient products. The legislative plan enacted by Congress sets forth two interrelated elements for accomplishing this objective. The first element is to require manufacturers to produce more efficient products, and the second is to inform the purchaser of consumer products of the relative energy efficiency, annual operating costs and other energy use factors of the products. Given this information, the purchaser will be equipped to select the more energy efficient products.

The first element, described in section 325 of EPCA, prior to amendment by NECPA, called for the promulgation of voluntary efficiency improvement targets representing aggregate industry efficiency improvements that were to be achieved by 1980. As an incentive for the industry to try and achieve these targets, a reporting and monitoring system was to be established by DOE to track industry progress. In the event that achievement of a target for a particular covered product appeared unlikely, DOE would have been required to initiate an administrative proceeding to prescribe a mandatory energy efficiency standard for the covered product in question.

In NECPA, the target program was replaced with a mandatory energy efficiency standards program. Section 422 of NECPA amended section 325 of EPCA to provide for a mandatory energy efficiency standards program.

The second element set forth in section 324 of the Act involves the development of a labeling program requiring manufacturers to label covered products with energy cost or consumption information which will assist consumers in making purchasing decisions. The Federal Trade Commission (FTC) has the responsibility for developing the labeling rules and administering the labeling program. The final rule for labeling only included room air conditioners, furnaces, clothes washers, dishwashers, water heaters, refrigerators and refrigerator-freezers,

[1] This and subsequent references to the "Act", and sections of the Act, refer to EPCA as amended by NECPA.

and freezers and appeared in the Federal Register of November 19, 1979 (44 FR 66466). Labeling requirements are expected to be issued for central air conditioners and heat pumps in the near future.

In conjunction with the issuance of the labeling rules, section 337 of the Act requires DOE to develop a consumer education program that will enhance consumer awareness of the need for energy conservation and create a better understanding of the information provided on the labels. This is intended to encourage comparison shopping and to generate consumer demand for the more efficient products. As a consequence, it is anticipated that manufacturers will be influenced to expedite efficiency improvements for their various product lines to meet the market demand.

In order to further effectuate these programs, section 323 of the Act requires that DOE develop test procedures for the determination of estimated annual operating costs and at least one other measure of energy consumption for each covered product (energy factor, energy efficiency ratio, seasonal energy efficiency ratio, annual fuel utilization efficiency) which will assist consumers in making purchasing decisions. Testing by manufacturers in accordance with these test procedures will serve as a basis for: (1) the energy cost and consumption information that will be required to be included on product labels under the FTC labeling program and (2) representations by manufacturers regarding the energy consumption characteristics of their product. Also, measurements of efficiency which are derived from the test procedures will be used as the basis for energy efficiency standards. Manufacturers will be required to establish that their products are in conformance with the standards by testing in accordance with the test procedures. Further, compliance with the standards will be determined by using these test procedures. DOE has prescribed final test procedures for the covered products included in this notice, and the citation to each of the rules is listed in Table 1-1.

The test procedure design is flexible enough to allow for technological variation among different basic models within a covered product. In order to provide comparable measurements of energy consumption, the test procedures must assure that different manufacturers' product lines will be subject to the same measurement criteria. DOE is aware that new products or designs will be developed which either do not fall under the product test procedures or incorporate unique design characteristics which prevent testing according to the test procedures, or the prescribed test procedures evaluate the product in a manner unrepresentative of its true energy consumption characteristics. DOE intends, on a continuing basis, to modify test procedures to accommodate new product designs, as necessary. The Department has proposed provisions allowing it to temporarily waive test procedure requirements in these cases. The proposed waiver provisions appeared in the Federal Register of March 4, 1980 (45 FR 14188).

Table 1-1.—Federal Register *Citations for Test Procedures*

Covered product type	Proposed rule	Final rule
1. Refrigerators and Regrigerator-Freezers.	(42 FR 21576) Apr. 27, 1977.	(42 FR 46140) Sept. 14, 1977.
2. Freezers	(42 FR 21576) Apr. 27, 1977.	(42 FR 46140) Sept. 14, 1977.
3. Dishwashers	(42 FR 15423) Mar. 22, 1977.	(42 FR 39964) Aug. 8, 1977.
4. Clothes Dryers	(42 FR 21576) Apr. 27, 1977.	(42 FR 46145) Sept. 14, 1977.
5. Water Heaters	(42 FR 21576) Apr. 27, 1977.	(42 FR 54110) Oct. 4, 1977).
Amendment (Energy Factor).	(43 FR 13888) Apr. 3, 1978.	(43 FR 48986) Oct. 19, 1978.
Amendment (First Hour Rating.	(44 FR 27191) May. 9, 1979.	(44 FR 52632) Sept. 7, 1979.
6. Room Air Conditioners	(41 FR 31237) July 27, 1976.	(42 FR 27896) June 1, 1977.
Amendment (packaged terminal air conditioners).	(45 FR 2632) Jan. 11, 1980.	
7. Home Heating Equipment (not including furnaces).	(23 FR 23860) May 11, 1977 (unvented).	(43 FR 20128) May 10, 1978.
	(42 FR 43930) Aug. 31, 1977 (vented).	(43 FR 20147) May 10, 1978.
8. Television Sets	(42 FR 21576) Apr. 27, 1977.	(42 FR 46145) Sept. 14, 1977.
9. Kitchen Ranges and Ovens	(42 FR 65576) Dec. 30, 1977.	(43 FR 20108) May 10, 1978.
10. Clothes Washers	(42 FR 25329) May 17, 1977.	(42 FR 49802) Sept. 28, 1977).
11. Humidifiers and Dehumidifiers.	(42 FR 27941) June 1, 1977.	(42 FR 55599) Oct. 18, 1977.
12. Central Air Conditioners (Cooling only).	(42 FR 30401) June 14, 1977.	(44 FR 60150) Nov. 25, 1977.
Amendment (heat pumps)	(44 FR 23468) Apr. 6, 1979.	(44 FR 76700) Dec. 27, 1979.
13. Furnaces	(42 FR 40826) Aug. 11, 1977.	(43 FR 20147) May 10, 1978).
Amendments to Furnaces	(45 FR 1298) Jan. 4, 1980.	
14. Test Procedure Waiver	(45 FR 14188) Mar. 4, 1980.	

1.2.2 Statutory Objectives. The Act requires that energy efficiency standards be prescribed for all the consumer product types listed in section 322(a). "Energy efficiency standard" means a performance standard which prescribes a minimum level of energy efficiency for a covered product. Such standard will prescribe either the same energy efficiency level or an energy efficiency level which varies with capacity for all of the basic models of the class of covered product. Energy efficiency standards utilize the test procedures prescribed in 10 CFR Part 430, Subpart B, and any requirements imposed on manufacturers which DOE determines are necessary to assure that each covered product to which a standard applies meets the required energy efficiency level specified in the standard.

Priority is required by the Act to be given to refrigerators and refrigerator-freezers, freezers, cloths dryers, water heaters, room air conditioners, home heating equipment not including furnaces, kitchen ranges and ovens, central air conditioners (cooling only), and furnaces. The second set of products: dishwashers, television sets, humidifiers and dehumidifiers, and clothes washers were the subject of a separate advance notice which was published in the Federal Register (44 FR 72276), of December 13, 1979. An advance notice for central air conditioners (heat pumps) was published in the Federal Register of January 23, 1980 (45 FR 5602). A notice of proposed rulemaking for the second set of products including central air conditioners (heat pumps) is to be published in the Federal Register by March 1981. In addition to those covered products specifically identified, the Act also permits DOE to prescribe standards for other consumer products which meet certain criteria stated in section 325(a)(2). A list of such products which DOE considers may be subject to standards is required to be published no later than November 9, 1980, but the list may be revised thereafter.

The standards proposed are required by section 325(c) to be designed so as to achieve the maximum improvement in energy efficiency which is technologically feasible and

economically justified. Under section 325(b), however, no standard can be presribed for a particular type or class of covered product if: (1) there is no DOE test procedure for the type or class; or (2) DOE determines, by rule, that the establishment of a standard for the particular type or class would not result in significant conservation of energy or is not technologically feasible or economically justified.

Section 325(d) provides that before DOE determines whether a standard is economically justified, it must first solicit comments on a proposed standard in accordance with the procedure set forth in sections 336(a) and 325(i). After reviewing comments on the proposal, DOE must then determine that the benefits of the standard exceed its burdens based, to the greatest extent practicable, on a weighing of the following seven factors:

(1) The economic impact of the standard on the manufacturers and on the consumers of the products subject to such standard,

(2) The savings in operating costs throughout the estimated average life of the covered products in the type (or class), compared to any increase in the price of, or in the initial charges for, or maintenance expenses of the covered products which are likely to result from the imposition of the standard,

(3) The totel projected amount of energy savings likely to result directly from the imposition of the standard,

(4) Any lessening of the utility or the performance of the covered products likely to result from the imposition of the standard,

(5) The impact of any lessening of competition, determined in writing by the Attorney General, that is likely to result from the imposition of the standard,

(6) The need of the Nation to conserve energy, and

(7) Any other factors which DOE considers relevant.

In developing the consumer products efficiency standards, the economic effects of alternative efficiency levels were systematically analyzed. To weigh effectively the above seven legislative criteria, it was necessary to quantify the expected consequences of energy efficiency regulations, including impacts on consumers, manufacturers, and the Nation. This analysis is discussed in depth in section 5 of this notice.

Section 325(f) of the Act provides that energy efficiency standards do not have to be identical for all products within a type or class provided either of two conditions are met: (1) they consumer different types of fuel, or (2) they have a capacity or other performance-related feature which other products within the same type or class do not have. For example, within a type, different standards based on performance are prescribed for split system central air conditioners, and single package central air conditioners, and within a class, refrigerator-freezers with side freeezers have different standards depending on volume or capacity of the unit.

Section 325(e) provides that manufacturers having annual gross revenues not exceeding $8,000,000 may apply to DOE for an exemption from all or part of the requirements of an energy efficiency standard. This exemption may not extend beyond 2 years from the effective date of any standards requirement. This authority will not be exercised by DOE unless, after consultation with the Attorney General, the Secretary finds that failure to allow the exemption would likely result in a lessening of competition. This exemption is discussed in greater detail in section 8, "Small Business Exemptions."

Other provisions of the Act are: (1) a review of test procedures within 3 years of NECPA enactment and from time to time thereafter [section 323(a)(7)]; (2) reevaluation of the standards within 5 years of prescription [section 325(h)]; (3) procedures for preemption of state energy efficiency regulations [section 327].

Section 326 of the Act imposes requirements upon manufacturers to assure that each covered product to which a standard applies meets the required energy efficiency level. DOE is today proposing certification provisions which include testing by the manufacturer and submission of data to DOE before a manufacturer may introduce products into commerce. Section 333 provides that any persons who knowingly violate any provision of section 332 (which enumerates prohibited acts) shall be subject to civil penalties.

Enforcement-related provisions of the Act provide for: (1) DOE to prescribe rules requiring manufacturers to allow the Department to observe testing and inspect results of testing conducted by the manufacturer or his agent [section 326(b)(5)]; (2) manufacturers to supply to DOE a reasonable number of products for testing purposes [section 326(b)(3)]; (3) manufacturers to submit information or reports necessary to ensure compliance [section 326(d)]; and (4) injunctive relief against any prohibited act, including distribution of noncomplying products [section 334]. These enforcement-related provisions are detailed in section 6, "Certification and Enforcement."

1.3 Planned Regulatory Action

1.3.1 Introduction. As DOE's first step in prescribing energy efficiency standards, an advance notice of proposed rulemaking for the nine covered products: refrigerators and refrigerator-freezers, freezers, clothes dryers, water heaters, room air conditioners, home heating equipment not including furnaces, kitchen ranges and ovens, central air conditioners (cooling only), and furnaces was published in the Federal Register of January 2, 1979 (44 FR 49). An advance notice of proposed rulemaking for dishwashers, television sets, clothes washers, and humidifiers and dehumidifiers appeared in the Federal Register of December 13, 1979 (44 FR 72276) and for central air conditioners (heat pumps) on January 23, 1980 (45 FR 5602).

Today, DOE is proposing energy efficiency standards for refrigerators and refrigerator-freezers, freezers, clothes dryers, water heaters, room air conditioners, home heating equipment not including furnaces, kitchen ranges and ovens, central air conditioners (cooling only), and furnaces.

The Act defines energy efficiency standards as performance standards which establish the minimum energy efficiency level required to be achieved by each type of covered product or class. "Type" of covered products refers to one of the categories of consumer products designated in section 322 of the Act identified by DOE as having met the criteria stated in section 325(a) of the Act. "Class" of covered product means in general a group of basic models within a covered product that constitute a type which has the same primary energy source. Products may have a different capacity or other performance related feature which affects the energy efficiency of the product. The standards will not prescribe the means by which the level is reached. The standards will apply only to those covered products manufactured after the effective date of the final rule, and not intended for export.

1.3.2 Criteria for Selection of Classes. DOE has grouped the basic models of each covered product into classes which account for type of fuel used and performance related features. These classes were determined with the use of data supplied by interested persons in response to DOE's advance notice of proposed rulemaking. Different classes may be specified in the final rule if DOE receives data, views and arguments which justify changes. DOE used the following criteria to group

basic models of each covered product into classes:

(1) DOE has specified separate classes for basic models which have a different primary energy source, i.e., oil, gas, or electricity.

(2) DOE has specified separate classes in order to assure, to the extent practicable, consistent with the intent of the Act, that consumer products having a different capacity or other performance-related feature which affect efficiency and utility, remain available to consumers. Separate classes are established when the feature causes the energy efficiency of models with the feature to be different from that of models without the feature.

1.3.3 Determination of the Maximum Technologically Feasible Energy Efficiency Level by Product Class. The rule proposed today identifies the maximum technologically feasible energy efficiency level and sets forth the energy efficiency levels that the Department believes are economically justified for each class of covered consumer product subject to this notice. This determination was made in part on the basis of data supplied to DOE by manufacturers and other interested parties in response to the advance notice of proposed rulemaking which appeared in the Federal Register, January 2, 1979 (44 FR 49), and the notice of opportunity for further comment, which appeared in the Federal Register, August 24, 1979 (44 FR 49696). In addition, data were obtained at public meetings conducted in January and February of 1979, from the National Bureau of Standards and from DOE contractors.

The maximum technologically feasible energy efficiency levels identified here may be modified in the final rule either as a result of (i) modifying the definition of "maximum technologically feasible energy efficiency level," (ii) receipt of additional information regarding the highest levels of energy efficiency of basic models expected to be commercially available in 1986, or (iii) efficiency improvements that are expected to be commercially available by 1986. In addition, if after efficiency standards are prescribed, DOE determines that standards are justified for a nonregulated class either due to receipt of additional information regarding the level of energy efficiency improvements possible, significant increase in the number of units sold in that nonregulated class, or any other information DOE considers relevant, the Department will propose an amendment to the final rule to include those levels DOE believes are technologically feasible and economically justified.

1.3.4 Method of Specifying Energy Efficiency Levels. For refrigerators and refrigerator-freezers, freezers, clothes dryers, kitchen ranges and ovens, and water heaters, it was found that the efficiency levels within any class vary with capacity (i.e., net volume). Therefore, within a single class, basic models differing according to capacity are to be subject to different energy efficiency levels. This method of establishing energy efficiency levels is designed to achieve improvements in production efficiency in all capacity sizes proportionally equal and not to penalize certain basic models that have efficiency differences due to variation in capacity or volume. For furnaces, central air conditioners, and room air conditioners, the analysis indicates that efficiency levels do not vary with capacity. Therefore, energy efficiency levels can be set at the same level within each class. The "Engineering Analysis," TSD No. 5, contains a more detailed explanation of the rationale for variable standards by capacity.

1.3.5 Planned Phase-In of Standards. Section 325(c) of the Act allows for a phasing-in of the standards over a period not in excess of 5 years through the establishment of intermediate standards. Use of the full 5 year period provides manufacturers with more planning and development time, to meet final standards than otherwise would be proposed if a shorter period was adopted.

Accordingly, DOE plans to utilize the full phase-in period and has proposed final standards which are to be achieved by January 1, 1986. Intermediate standards proposed for the subject consumer products are to be effective 180 days after the rule is published in the Federal Register. The intermediate standards take into account the short lead time manufacturers have in order to make design changes and the possibility of products being eliminated from the market place. DOE is proposing intermediate standards which it believes are technologically feasible and economically justified.

2. Definitions

For purposes of this notice, the following terms are defined:

"Basic model" of covered product means all units of a given type of covered product (or class thereof) manufactured by one manufacturer which have the same primary energy source (gas, oil or electricity), the same capacity, and which do not have any physical or functional differences that affect energy consumption, measured in accordance with the DOE test procedure.

"Certification" means all actions available to DOE or required of a manufacturer or private labeler prior to or immediately after the beginning of commercial distribution to ensure that all covered products not meeting the applicable energy efficiency standards are withheld from distribution.

"Enforcement" means all activities subsequent to certification, available to DOE or required of a manufacturer or private labeler to ensure that all covered products not meeting applicable energy efficiency standards are withheld from distribution.

"Maximum technologically feasible energy efficiency level" means, for each class of covered product, the highest level of the measure of energy efficiency (energy factor, annual fuel utilization efficiency, energy efficiency ratio, or seasonal energy efficiency ratio as defined and measured according to DOE test procedures) of any basic model for each class that DOE expects to be commercially available at the time of the effective date of the final standard.

"Minimum energy efficiency level" (MEEL) means the minimum value of the measure of efficiency (energy factor, energy efficiency ratio, seasonal energy efficiency ratio, annual fuel utilization efficiency), specified in 10 CFR Part 430, Subpart C, and measured according to DOE test procedures in Subpart B, which a covered product must meet or exceed in accordance with Subpart F in order to be in compliance with an energy efficiency standard.

3. Advance Notice

3.1 Discussion of Industry Data

In order to obtain information on the consumer product industry suitable for determining probable impacts of energy efficiency standards, the following sources were used: 1) publicly available information (Moody's, Standard & Poor, Census of Manufacturers' Directory, etc.), 2) a survey of all firms identified as consumer product manufacturers (Form CS-179), 3) a survey of a sample of firms in the industry (Form CS-195) which were made available at the DOE *Freedom of Information Office.* Information solicited from the industry was provided on a voluntary basis and, as discussed below, was often of a proprietary nature.

The information provided background on shipment levels, the overall business climate of the industry, and new product offerings. Also included was information maintained by various credit/financial reporting companies on the finances of publicly owned firms (corporations). This information has been incorporated directly into the financial analysis of regulatory impacts.

In order to obtain information on product efficiency, number of units shipped, capital investment, and suggested retail price, a survey of all identified consumer product manufacturers was conducted. The survey instrument was Form CS–179, a copy of which appears as Appendix C of the "Economic Analysis Document," TSD No. 4. Responses were made available to DOE in aggregated form by the trade associations in order to protect the confidential information gathered via this survey. The results of the survey were used to determine the potential impact of alternative standard levels on manufacturers by determining the number of models potentially falling below various efficiency levels. Models falling below specified levels represent lost sales and lost revenues to the firms producing them and are thus used (with other data) in assessing the size of the impact. Additional data solicited under Form CS–179 concerned design options and the adequacy of the class definitions proposed by DOE.

The trade associations provided aggregated data on the relationship between retail price and energy efficiency (and, where appropriate, capacity). This information was used in analyzing the effect regulations would have on price and quantities shipped.

In developing an economic model which incorportes the business practices of the industry, additional information was solicited from selected representative firms via Form CS–195, a copy of which appears as Appendix D of the "Economic Analysis Document," TSD No. 4. This survey was provided to all firms who identified themselves as consumer product manufacturers and were willing to submit the requested data. This survey gathered information on normal practices in accounting, financing, decision making, and other information practices relevant to a firm's decision to remain in or withdraw from the market. The results of this survey were incorporated into the economic models used in analyzing impacts on manufacturers and are available in the "Economic Analysis Document," TSD No. 4.

The financial/economic models, developed in part from Form CS–195, were used to assess impacts on manufacturers. In particular, the models were used to determine the number of firms forced to leave the market place, effects on profits, changes in debt and asset levels, and how market shares would be reapportioned as the result of the exit of firms from the market place.

Finally, manufacturers were asked to comment on and provide additional data for selected draft reports. Chief among these was the report on the costs required to achieve various energy efficiency levels. Because these costs were used in evaluating direct impacts on manufacturers and in assessing consumer price increases, every effort was made to ensure their accuracy. Accordingly, the costs represented in the final version of this report were the product of substantial consultation with industry.

3.2 Comments Received in Response to Advance Notice

3.2.1 Engineering.

Product Classification

Nearly all manufacturers and their trade associations addressed this issue and, in almost all cases, they felt that the number of classifications of the products should be expanded. The request for expanded classifications covered most covered products but particularly furnaces and boilers, kitchen ranges and ovens, water heaters, room air conditioners, and refrigerators. Several manufacturers expressed the opinion that their products require separate classifications or, in some cases, should be exempt completely from the standards. DOE has reviewed these comments and made appropriate revisions based upon the comments received and criteria identified in Section 4 of this notice.

Phase-In of Standards

Many manufacturers addressed the issue of interim efficiency standards. In particular, manufacturers of furnaces and boilers expressed the desire to have no interim standards as the testing and approvals required for each modification would be a major task. Several manufacturers suggested that standards become effective at different times for different products to spread the testing requirements. There was a general desire to know as early as possible what the final standard would be to provide as much time as possible to meet that standard. Twenty-four comments suggested three standard levels (1981, 1983, and 1985) would be a burden on industry because of the 3- to 5-year lead time for introducing new models. While the majority of the comments recommended standards for 1981 and 1985, two comments recommended 1983 and 1985, and four comments recommended only 1985 standards. Also, three comments recommended that no standards be set for water heaters as 47 states have adopted ASHRAE Standard 90–75 which includes standards for water heaters that approach the state-of-the-art technology. Based upon its analysis of these comments, DOE is proposing intermediate (1981) and final (1986) energy efficiency standards.

Energy Efficiency Standards

Various comments recommended that the standards should vary with capacity for clothes dryers, refrigerators and refrigerator-freezers, water heaters, central air conditioners and conventional ovens because efficiency is directly related to the capacity or volume of the product. Manufacturers generally seemed to prefer increasing the number of product classes to handle the variation of efficiency with capacity. DOE is today proposing energy efficiency standards that vary with capacity for clothes dryers, refrigerators and refrigerator-freezers, freezers, kitchen ranges and ovens, and water heaters.

A number of comments urged that the energy efficiency improvement target levels (43 FR 47118 and 43 FR 15138) be used to establish 1985 standards for furnaces, room air conditioners, central air conditioners, refrigerators and refrigerator-freezers. In lieu of this approach, DOE is today proposing energy efficiency standards which represent the maximum improvement in energy efficiency which is technologically feasible and economically justified as required by the Act.

A number of comments urged that the standard levels recognize product variability, manufacturers' tolerances, and test variability and that the standard should be applied to the mean value of efficiency of each basic model rather than a level every unit must meet. However, one comment recommended the standard be applied to the mean value of efficiency of a manufacturers' total distribution of each class of product, allowing the manufacturer to continue to offer a complete product line. DOE is today proposing standards to be applied to each basic model of a type of covered product (or class thereof).

While a number of comments suggested specific levels to be considered for standards, one comment recommended that standards for central air conditioners in 1981 be set no higher than the 1975 product sales-weighted efficiency level. Two comments suggested that standards should not be set higher than the levels in effect in the State of California, while one comment urged that the standards be set no lower than the California levels. Finally, the comments suggested that standards which have more than a 3- to 5-year payback would be unacceptable to consumers. After reviewing all relevant

comments, DOE is today proposing standards which will achieve the maximum improvement in efficiency which is technologically and economically feasible.

Test Procedures

Concerns over the test procedures generally related to the fact that the performance aspects of many product features, such as microwave oven browning elements and automatic termination on clothes dryers are not adequately recognized. Amendments to the test procedures for clothes dryers have been proposed to include the performance aspects of automatic termination devices and the standards proposed today are based upon the proposed amended test procedures. Also, no standard is being proposed for microwave ovens.

Product Elimination

Several comments expressed concern that the standard might be set at levels sufficiently high to force certain products from the market place. These may be significant products for the replacement market (horizontal furnaces) or contain features which have a utility to the user (refrigerator-freezer with through-the-door services). Even though certain basic models may be eliminated, DOE has specified separate classes to ensure the availability of features providing utility when the feature causes the energy efficiency of the models with the feature to be different from that of models without the feature.

Maximum Technologically Feasible

A number of manufacturers believe that maximum technologically feasible designs should not be based upon models manufactured by companies who have gone out of business, limited volume trial models of uncertain commercialization, and models representing an extremely small percentage of class model mix. Further, they believe only models that have been commercially available for at least 3 years should be considered technically feasible. The numerical value given in the advance notice for standards for home heating equipment not including furnaces, freezers, and room air conditioners were claimed to be too high. After review, DOE today has identified the maximum technologically feasible energy efficiency level for each class of covered product to be the highest level of efficiency for each class that DOE expects to be commercially available at the time of the effective date of the final standard.

3.2.2 Economics.

Impacts

Comments on economic impacts were varied and came mainly from manufacturers. Points raised included: the need to address product maintenance costs in economic justification; the difficulty and cost of providing economic data; and the product development and testing costs for small companies. DOE has taken all these factors into account along with other major factors as detailed in the "Economic Analysis Document," TSD No. 4.

Payback

One manufacturer suggested that the payback period for the increased first costs through reduced energy costs should be 2 to 3 years and, in no case, more than 5 years. The standards proposed today have paybacks which are on the order of five years or less, and are derived from life cycle cost analysis discussed in the "Economic Analysis Document", TSD No. 4

3.2.3 Consumer Education.

A few manufacturers suggested that a consumer education campaign that recommends efficient methods of operation of existing appliances may achieve greater energy conservation in a shorter time period than will energy efficiency standards. It was also suggested that the educational phase of the energy efficiency standards program should coincide with the introduction of labels and energy fact sheets. DOE has developed a consumer education program to complement the energy labeling program. The consumer product education labeling program sponsored 10 regional workshops for industry, educators, utilities, and State energy officials in the Fall of 1979. A national consumer awareness campaign began last month to inform consumers of the appearance of the consumer product labels and how to use labeling information in the purchase of energy efficient products. A consumer information booklet, public service announcements for radio and TV, educational exhibits and a training package for retail sales persons are among the components of this nationwide effort.

3.2.4 Other.

Sampling Procedures

Two trade associations commented that sampling procedures will affect the energy efficiency level which can be met. A number of different sampling procedures were suggested. DOE has considered the proposed sampling procedures in developing the certification and enforcement program. The proposed approach, "Mixed Certification and Enforcement Approach" and alternatives considered are described in section 6 of this notice.

Patent Infringement

One manufacturer stated that energy efficiency standards should not be based on a product that is covered by patents. In particular, the manufacturer cites patents involving the convection oven. DOE has studied the problem of patent infringement and has determined that achieving today's proposed standards does not infringe any existing patents. The Department is proposing performance standards, thus allowing the manufacturer product design flexibility. Information available to DOE indicates that of the design options considered, none have proprietary patent protection.

Preemption

Two major manufacturers called for clarification of the timing of the preemption clause. Their preferred interpretation was that once the Federal standard is prescribed for a given product an existing State standard is automatically and immediately preempted. The State preemption process proposed today is discussed in section 7 of this notice.

Product Exemption

A number of manufacturers and a trade association favored the exemption from energy efficiency standards of various products including kitchen ranges and ovens, clothes dryers, space heaters, and packaged terminal air conditioners based on the grounds that there is little difference in energy consumption between different models. No standards are proposed today for those classes for which standards are not economically justified.

Labeling

Commenters addressing this subject suggested that labeling would not be necessary when energy standards are established. Concern was expressed over the complications of energy labeling, particularly for water heaters because of different utility rate structures and use habits. DOE has determined that labeling alone will not satisfy the mandate of the Act. For further discussion on the impacts of labeling on energy savings the reader is referred to the "Economic Analysis Document" TSD No. 4.

Enforcement

Trade associations suggested that current industry certification programs should be used wherever possible and

that a common enforcement program should be used for the labeling and energy efficiency standards programs. It was suggested that in cases where data is in question a manufacturer should be allowed to verify his own tests first, followed by testing by an independent laboratory, if necessary, and that testing by DOE should be used only as a last resort. DOE has reviewed these comments and is today proposing an enforcement approach which is discussed in detail in section 6 of today's notice.

4. Determination of Energy Efficiency Levels

4.0 Methodology

Impact Assessment of Standards

In order to assess the benefits and impacts of setting standards for energy efficiencies at different levels based on the seven criteria specified in section 325(d) of the Act, engineering and economic analyses were completed for each covered product and the results are summarized within this section. As part of this analysis, the relationship between the increased cost of a consumer product and its efficiency improvement was estimated for each product class. Estimates were also made of the maximum technologically feasible energy efficiency levels for 1986. In addition, estimates of the investment required by a typical large and small manufacturer were made. Estimates by product class of the changes in manufacturing materials needed were made to provide estimates of materials availability for the different alternate efficiency levels. Cost-efficiency relationships were used to estimate national energy savings through the year 2005 considering changes in purchases of consumer products. An estimate of industry impacts was developed using data from industry surveys and the cost efficiency curves. Finally, environmental impacts and enforcement costs were evaluated. The proposed standards were set at the highest levels technically feasible and economically justified considering these impacts.

Determination of Classes

An initial task in the development of standards was the establishment of classes for each of the nine covered products. The first step was to divide the various models within each covered product into classes according to the type of fuel used, as mandated by the Act. Although efficiencies of higher values are always better, relative efficiencies across fuel types in a covered product are not comparable because point of use energy is considered in all cases rather than primary energy source. The second step was to further segregate each covered product into classes each of which was distinguished by capacity or a performance-related feature which affects energy efficiency but provides utility to the consumer. Performance of a consumer product is the objective measure of how well the product does its intended job. Measures of performance include capacity and quality. Quality is a measure of the consistency, uniformity or thoroughness with which the product does its job. Utility of a consumer product is a subjective measure, based on the consumer's perception of the capability of the product to satisfy user needs.

Next, an investigation of the inherent energy efficiency of each class was performed to determine if different energy efficiency levels were needed for each of the classes. Only those classes which used a different type of fuel or which had an energy efficiency inherently different from similar classes were identified in the proposed rule.

Test Procedures

Measurements of efficiency which are derived from the test procedures are used as the basis for energy efficiency standards. Manufacturers are required to establish that their products are in conformance with the standards by testing in accordance with these test procedures.

Cost-Efficiency Relationships

Major assumptions in developing manufacturing cost relationships associated with energy efficiency improvements for the 1986 standards were:

- production volumes were assumed to remain constant within each product class;
- design options selected for analysis were based on technologies which are currently available or have been demonstrated to be feasible;
- only design options which are measurable by existing DOE test procedures were considered; and
- lead times for implementing design changes required to meet the energy efficiency levels were long enough so that no significant increase in engineering staff were likely to be required.

The engineering analysis involved three primary steps. First, for each product class, the facilities of a typical large and small manufacturer were characterized in terms of production volumes and production line layouts including capital equipment. Second, for each product class, a baseline unit representative of products at the 1978 shipment weighted energy factor was selected and estimates were made of the energy efficiency improvements which would result from implementing various design options. Finally, two estimates were made—the added cost at the manufacturing level, and the cost to a consumer of achieving different efficiency levels. These steps are described in more detail below.

In order to characterize manufacturers of each product class, a simulated manufacturing facility for a typical large and small manufacturer and the number of large and small manufacturers were estimated so that the total shipments per year would be equal to the original shipment estimate. The facilities were further characterized in terms of manufacturing equipment and production track layout required for the production of the units. A more detailed presentation of the manufacturing cost analysis can be found in the "Engineering Analysis Document," TSD No. 5.

Design Options

The design option analysis began with the selection of a baseline unit. The selection was based on data obtained from Form CS-179, a survey of all identified consumer product manufacturers. The baseline unit was defined as the unit with an efficiency, input, output, and size approximately equal to that of the most commonly produced unit in 1978. For the analysis of the various design options each baseline unit was characterized in terms of its features which relate to efficiency.

Various combinations of manufacturing design options and their potential for energy savings were identified. The following philosophy was applied to the selection of specific design options:

(1) Improvements must have a payback to the consumer of less than the product's life.

(2) Design options to the manufacturer with the shortest lead time and most cost effective improvements were selected to achieve each efficiency level analyzed.

Various other methodologies (series of design improvements) to higher efficiency can be envisioned. For instance, the lowest cost to the consumer to achieve each efficiency level could have been assessed. This could lead to a rearrangement of the design improvements to achieve the level. However, minimizing lead time within the payback criterion, was felt to be the most effective and likely scenario

for introducing energy savings at the earliest possible date.

Using engineering analysis and computer simulations, the efficiency improvements which would result from implementing various design options were estimated. The design options considered were limited to those based on "available" technology, defined as those technologies presently implemented in units available in the marketplace. Only those design options were considered which were covered by existing test procedures (final and proposed). These design options are described in detail in the "Engineering Analysis Document," TSD No. 5 for each covered product. The design option analysis provides estimates of the per unit change in materials and purchased parts required to achieve specific efficiency levels.

Cost Elements

Four basic cost elements (investment, materials, purchased components, and labor) were considered. Investment included capital equipment, plant, tooling, allowance for costs related to inventory, spare parts, and reissuing product literature. Per unit costs were estimated by amortizing these investment costs using the yearly production volume and depreciation periods of 30 years for plant, 10 years for capital equipment, and 3 years for tooling and miscellaneous costs. Material costs per unit were estimated by using the material costs per pound with the estimated changes in materials made during the design option analysis. Purchased component costs per unit were based on quotes from suppliers. Although some larger manufacturers might make components such as compressors or vent dampers, these items were costed as purchased parts unless the majority of manufacturers produced them in-house. Labor costs were obtained by estimating the change in labor in minutes for each design option and using a labor rate of $17.34 per hour (direct cost plus burden). These four cost elements were summed to estimate the added factory cost.

Price Mark-Ups

Estimates of the added cost to the consumer were made by marking up the factory cost by 35% to obtain an estimate of the cost to a wholesaler-distributor. The wholesaler-distributor cost was finally marked up by 60% for water heaters, furnaces, and central air conditioners and 70% for refrigerators and refrigerator-freezers, freezers, clothes dryers, kitchen ranges and ovens, and room air conditioners to obtain the estimated added cost to the consumer. To estimate the price of a more efficient unit to the consumer, this estimated cost increase was added to the price of the baseline unit. This price and the efficiency of the unit were then used to generate a cost vs. efficiency relationship for each product class.

Maximum Technologically Feasible

DOE believes that for 1986, product designs in prototype form January 1980 represent the maximum technologically feasible products. Although there will be advances in development beyond some of these levels over the next 6 years, DOE believes that these developments could not be demonstrated as technologically feasible in that the long lead times would not allow such products to be introduced into the market by 1986.

Even though manufacturers have prototypes in the January 1980 time frame, it is not practical to expect a complete product line transformation considering product development cycle of engineering, prototype fabrication, laboratory testing, field testing, production engineering and production facility modification. As a result it is not realistic to expect that in 1986 the manufacturer would be able to produce only those products whose energy efficiency is equal to or greater than the maximum technologically feasible. Consequently, DOE has determined that it is not economically justifiable to propose energy efficiency standards at the maximum technological limit.

Life Cycle Costs and Payback Analysis

Two key criteria for assessing impacts on consumers resulting from standards are life cycle costs and payback period. Life cycle cost is a measure of the discounted total cost of consumer product ownership. Included is the total purchase price, energy use over the life of the product, and the maintenance costs over the service life of the product, discounted to their present values. The consumer payback period represents the time required to recoup the increased purchase price of more energy efficient products through reduced energy bills. Decreases in product life cycle costs represent the net benefit to consumers while the consumer payback period gives an indication of the time it takes to overcome the initial burden of higher product prices.

Financial Impact Analysis

The financial impact analysis of manufacturers centers on projected changes in profit to net worth ratios and the ability of firms of different sizes to finance the capital investment necessary to meet 1986 standards. The analysis shows that small firms may experience greater difficulty in meeting standards than their larger competitors. The methodology underlying this analysis is as follows.

For the consumer product types subject to proposed standards, 292 manufacturers have been identified. Of these, financial data were available on 146 firms. These data were obtained primarily from public sources such as Dun & Bradstreet. Privately held firms, many of whom are small manufacturers, are underrepresented in the data base because financial information is not generally made available to the public. DOE requests manufacturers to submit additional financial data to expand the information available for financial impact analysis.

For the years 1973 through 1978, data were compiled on assets, liabilities, cost of goods sold, fixed costs and earnings for each firm. The data were not available by product type so it was necessary to break down aggregated data by line of business for diversified firms. The 146 firms were first rank ordered by their total sales. Large firms are defined as the largest 20 percent of the 146 firms, medium firms are the next 20 percent, and small firms are the remaining 60 percent.

Data analyses indicated that large manufacturers represent approximately 92 percent of total sales, medium firms 6.8 percent, and small firms, 1.2 percent. These percentages, along with estimates of total industry sales by product types, were used to disaggregate product type sales in 1978 into market shares for each of the 146 firms in the data base. In this way, estimated income and balance sheet data were derived for 146 firms for 1978 on a product type basis. These financial data were used to develop probability distributions around expected earnings for each product type for small, medium and large firms.

This procedure was used only after exhausting other potential sources of accounting data on each of the 146 firms. The industry, through the trade associations, was requested to provide detailed delineated financial data. Each such request was denied. DOE will continue in its attempts to obtain this information during the time between issuance of this proposed rule and promulgation of the final rule.

The financial impact analysis was generalized to small, medium and large representative firms for each product type. These representative firms were taken to have the mean financial values of all firms in the respective size category. Industry sales were projected for these firms as described in TSD No. 4. Investment requirements to meet

standards, as described in TSD No. 5, were added to fixed costs. The resulting change in earnings for each representative firm was calculated for the 1981 through 1988 time frame.

From the above analysis, expected average earnings were calculated for each size of representative firm for each product type. These average earnings were applied to the industry probability distributions described above in order to determine the projected industry distribution of earnings for each size of firm producing each of the eight product types. Manufacturers were assumed to be able to make the necessary capital investment for 1986 standards if they could do so out of retained earnings during the 1981 through 1985 time frame. Furthermore, they were assumed to be able to make this investment out of a combination of retained earnings and loans if any indebtedness could be paid back out of retained earnings over the 1986 through 1988 time frame.

Expected impacts of proposed standards on small, medium and large manufacturers are presented in their respective economic sections of this preamble. Impacts on the industry refer to the percentage of industry sales capacity having a high probability of successfully financing capital investment. Impacts on small, medium and large firms refer to that percentage of firms which are expected to successfully meet 1986 standards, as reflected in the probability distribution of forecasted earnings.

It should be recognized that manufacturers have flexibility for creative financing, creative production approaches and cost reduction. Those firms not able to successfully finance compliance with standards by means of funds from earnings or loans may be able to use other methods such as sales of stocks or bonds, transfer of funds from other operating divisions, etc. This flexibility will result in a greater success rate in meeting standards than that indicated by the conservative financial analysis presented here.

However, it is impossible to know in advance the full extent of this flexibility for all firms in the industry. Therefore, the percentage of firms identified as having low probabilities of success, using the conservative assumptions of the financial analysis, probably reflect a higher level of industry impact than will likely occur.

The financial impact analysis, even given its conservative assumptions, showed that the industry capacity estimated to be maintained after standards are imposed ranges from 75 percent for freezer manufacturers to nearly 100 percent for furnace manufacturers. Furthermore, sufficient production will be available for every consumer product class to meet consumer demand. The analysis indicates a low probability of successful financing for small manufacturers of all products except furnaces, central air conditioners and clothes dryers. However, given the conservative assumptions concerning manufacturer flexibility, the expected low impact on overall industry capacity and the potential for a 2-year exemption for firms under $8 million, the estimated level of manufacturer impact is not expected to be excessive when compared with the energy savings and net benefit to consumers discussed elsewhere in this preamble.

Of the 292 individual firms and major plants comprising the industry, the number of firms producing the different product types is as follows: refrigerator and refrigerator-freezers, 23; freezers, 18; ranges and ovens, 27; water heaters, 33; room air conditioners, 42; central air conditioners, 58; furnaces, 85; and clothes dryers, 17. These firms have combined consumer product factory sales of approximately $6 billion.

Impacts on Small Manufacturers Eligible for Exemption

Approximately 80 firms, or 27 percent of the industry, have individual gross sales from their overall operation of $8 million or less and therefore are eligible upon petition for a 2-year exemption from standards. These firms account for less than one percent of the total production of the eight consumer products. If granted exemptions, 60 firms, or 75 percent of manufacturers with sales less than $8 million, are expected to be able to meet the proposed standards. They may be able to capture a greater share of the low-priced market in 1981–1983 and may have proportionately higher profits than their larger competitors who must comply earlier with the standards.

Proposed standards for 1981 were set in order to allow the overall industry sufficient earnings to make the necessary changes for meeting proposed 1986 standards. However, small manufacturers will have greater difficulty meeting 1986 standards than their large counterparts due to their smaller earnings. The exemption of small firms with sales under $8 million are expected to mitigate this greater burden by allowing 2 years of proportionately higher earnings and a greater lead time for production changes.

4.1 Refrigerators and Refrigerator-Freezers

4.1.1 Summary. "Electric refrigerator" means a cabinet designed for the refrigerated storage of food at temperatures above 32°, and having a source of refrigeration requiring an electrical energy input only. It may include a compartment for the freezing and storage of food at temperatures below 32°F, but does not provide a separate low temperature compartment designed for the freezing of and the long term storage of food at temperatures below 8°F. It has only one exterior door, but it may have interior doors or compartments.

"Electric refrigerator-freezer" means a cabinet which consists of two or more compartments with at least one of the compartments designed for the refrigerated storage of foods at temperatures above 32°F and with at least one of the compartments designed for the freezing of and the storage of frozen foods at temperatures of 8°F or below and may be capable of being adjusted by the user of a temperature of 0°F or below. The source of refrigeration requires an electrical energy input only.

The proposed energy efficiency levels for refrigerators and refrigerator-freezers are found in Table 4.1–1. Table 4.1–2 presents the alternative efficiency levels selected for analysis for 1981 and 1986.

4.1–1 Energy Efficiency Levels for Refrigerators and Refrigerator-Freezers (Energy Factor, EF, ft³/kWh/24 hrs).

Product class	July 15, 1981	January 1, 1986
1 Electric refrigerator; manual defrost.	1.20+0.524V	11.04+0.474V
2 Electric refrigerator-freezer; manual defrost freezer.	0.06+0.400V	6.29+0.432V
3 Electric refrigerator-freezer; automatic defrost with top freezer	1.69+0.178V	4.91+0.183V
4 Electric refrigerator-freezer; automatic defrost with side freezer.	3.19+0.09V	5.20+0.082V
5 Electric refrigerator-freezer; automatic defrost with bottom freezer	4.5	8.1
6 Electric refrigerator-freezer; automatic defrost with top freezer and through-the-door ice or liquid service.	5.4	7.4
7 Electric refrigerator-freezer; automatic defrost with side freezer and through-the-door ice or liquid service.	4.7	6.3

V Total Unadjusted Volume, expressed in ft³.

Note.—See rationale for variable standards in section 4.1.2.

Table 4.1-2—*Alternate Efficiency Levels (Energy Factor, EF, ft³/kWh/24 hrs)*

Product class	Level	1	2	3	4
1. Electric refrigerator, manual defrost	1981	0.42+0.524V	1.20+0.524V	1.98+0.524V	2.76+0.524V
	1986	2.44+0.474V	3.84+0.474V	11.04+0.474V	.....
2. Electric refrigerator-freezer, manual defrost freezer.	1981	−0.52+0.400V	0.06+0.400V	0.65+0.400V	1.24+0.400V
	1986	0.69+0.432V	2.89+0.432V	6.29+0.432V	.....
3. Electric refrigerator-freezer, automatic defrost with top freezer.	1981	1.16+0.178V	1.69+0.178V	2.21+0.178V	2.73+0.178V
	1986	2.01+0.183V	3.71+0.183V	4.91+0.183V	.....
4. Electric refrigerator-freezer, automatic defrost with side freezer.	1981	2.84+0.09V	3.19+0.09V	3.54+0.09V	3.89+0.09V
	1986	4.20+0.082V	4.70+0.082V	5.20+0.082V	.....
5. Electric refrigerator-freezer, automatic defrost with bottom freezer.	1981	4.2	4.5	4.9	5.2
	1986	6.4	6.9	7.4	.....
6. Electric refrigerator-freezer, automatic defrost with top freezer and through-the-door ice or liquid service.	1981	5.0	5.3	5.7	6.1
	1986	4.8	6.5	7.7	.....
7. Electric refrigerator-freezer, automatic defrost with side freezer and through-the-door ice or liquid service.	1981	4.8	5.0	5.3	5.6
	1986	5.5	6.0	6.3	.....

V = Total unadjusted volume, expressed in ft³.

The levels selected for analysis for 1981 are derived from the 1978 shipment weighted energy factor (SWEF)—which is the summation of number of units of a particular basic model multiplied by the energy factor, divided by the total number of shipments within a class—for each class of refrigerators and refrigerator-freezers. Level 2 in 1981 corresponds to the SWEF in 1978. Level 1 is one standard deviation below the SWEF, while Level 3 and Level 4 are 1 and 2 standard deviations above the SWEF, respectively. The standard deviation of measured energy factors is used to define final levels because of the differences in distribution and definition of energy factors among product types and classes. Use of this statistical measure assures that the potential relative impacts of similar trial standard levels are the same for different classes. The levels selected for analysis for 1986 are derived from a manufacturing cost estimating technique used to estimate materials, investment and engineering costs required to market products of higher efficiencies in the 1986 time frame. Level 3 in 1986 corresponds to the maximum level which is technologically feasible and economically justified. A detailed explanation on the technological feasibility and economic justifiability can be found in the Engineering Analysis and Economic Analysis Documents, TSD No. 4 and No. 5, respectively. Levels 1 and 2 correspond to proportionally lower levels which have fewer design improvements required and correspond to lower first cost and generally higher life cycle costs. Level 4 corresponds to an advance technology case which incorporates design options not on the market place in any great quantity or only in prototype stages at this time.

The rationale for selecting the proposed levels appears in sections 4.1.2 and 4.1.3.

4.1.2 Engineering Analysis

Methodology

In performing the product efficiency analysis, the key design improvements for the cabinet and the refrigeration system considered were:

- substitution of polyurethane foam for fiberglass;
- double door gaskets and reduced throat clearance;
- improve compressor motor; and
- removal of evaporator fan motor from refrigerated space.

A computer model integrating cabinet design and refrigeration system subroutines was used to determine the performance of the improved designs. The computer model has been verified by comparing predicted results to the actual test results of a number of production and prototype refrigerator-freezer designs. A technical discussion of the computer model is contained in the "Engineering Analysis Document," TSD No. 5.

The manufacturing cost analysis assumed a facility consisting of seven manufacturing production lines for a large manufacturer and five for a small manufacturer. It was assumed that the product lines shared production lines of cabinet doors and compressors were purchased from other manufacturers.

Cabinet equipment suitable for polyurethane foam substitution was identified and costs determined. Tooling changes for outer cabinet and liner changes to accommodate foam substitution were costed. Tooling changes for mounting new purchased parts and other cabinet alterations were evaluated. Some plant costs were identified in conjunction with the additional space required for the foaming equipment.

Increased costs, per unit of foam material, were assessed and the increase in labor was estimated. Parts which must be purchased for compressor improvement, evaporator fan improvement, double freezer gasket and anti-sweat heater switch were all estimated for each efficiency level. These were combined with per unit investment costs to obtain estimates of the total added cost to achieve each efficiency level evaluated. These cost-efficiency relationships are explained in more detail in the "Engineering Analysis Document," TSD No. 5.

Maximum technologically feasible energy efficiency levels were developed using advanced technologies. For the automatic defrosting units, a forced convection standard evaporator in the freezer was used in series with a free convection passive defrosting heat exchanger in the fresh food compartment. Improved refrigeration system efficiency and reduced defrost requirements resulted. Insulaton thickness was optimized to achieve maximum internal storage volume with minimum heat gain. This included increased door insulation as well as a redistribution of insulation throughout the entire cabinet. Improved air system flow paths were employed to reduce the power necessary to operate the fan.

Maximum technologically feasible levels for the electric refrigerator-freezer; manual defrost freezer and electric refrigerator; manual defrost were achieved by increasing insulation thickness in the door and increasing heat transfer surface areas of the evaporator and condenser in addition to the use of available technology design options. These levels have not been proposed as the energy efficiency standard because of the present requirement for economic justifiability discussed in the "Economic Analysis Document," TSD No. 4.

The maximum technologically feasible levels for 1986 for refrigerators and refrigerator-freezers are shown in Table 4.1-3.

4.1-3 Maximum Technologically Feasible Levels for Refrigerators and Refrigerator-Freezers (Energy Factor, EF, ft³/kWh/24 hrs).

Product class	Level
1. Electric refrigerator; manual defrost	16 + .474V
2. Electric refrigerator-freezer; manual defrost freezer	11.9 + .432V
3. Electric refrigerator-freezer; automatic defrost with top freezer	7.1 + .183V
4. Electric refrigerator-freezer; automatic defrost with side freezer	8.62 + .090V
5. Electric refrigerator-freezer; automatic defrost with bottom freezer	9.7
6. Electric refrigerator-freezer; automatic defrost with top freezer and through-the-door ice or liquid service	8.9
7. Electric refrigerator-freezer; automatic defrost with side freezer and through-the-door ice or liquid service	8.9

V = Total Unadjusted Volume, expressed in ft³.

Test Procedures

The test procedures for refrigerators and refrigerator-freezers found at 10 CFR Part 430, Subpart B, provide a standardized method for calculating the efficiency (energy factor, EF) of refrigerators and refrigerator-freezers by measuring the adjusted refrigerators volume and the electrical energy consumption in a 24-hour period. The adjusted volume is calculated by adding the fresh food compartment volume to the product of the freezer compartment volume and an adjustment factor which accounts for the increased heat transfer into the freezer due to the large temperature difference across the freezer compartment walls. Energy factors have dimensions of cubic feet per kilowatt hour per 24 hours (ft^3/kWh/24 hrs) and are useful indicators of refrigerator and refrigerator-freezer efficiency since they facilitate comparison of energy consumption between units of different total volumes and with different ratios of fresh food to frozen food compartment volumes.

DOE received a comment in response to the advance notice that addressed the refrigerator and refrigerator-freezer test procedures. The commenter objected to the allowance of usage credit for designs which have switches to turn off anti-sweat heaters. When operating, these heaters provide localized heat to prevent condensation of moisture on certain exterior surfaces of these products when used in high humidity environments. The commenter maintained that these credits discourage design improvements which utilize improved insulation to prevent such condensation. Based on actual field test data, DOE maintains that the credits provided for this feature are appropriate and necessary and therefore has made no changes pursuant to this comment.

It was suggested that a 50 percent credit be given for each class and size category based upon the particular design which requires the least amount of anti-sweat heater energy. NBS and DOE have carefully analyzed this suggestion. The commenter assumed that the most efficient designs are those which have small differences in energy consumption when the anti-sweat switch is moved from the high energy consumption position to the low energy consumption position. This assumption is not necessarily true since switches in certain inefficient designs may not turn off all of the anti-sweat heaters and, consequently, the difference in power consumption for some inefficient designs may also be small. Consequently, changes in the test procedures to accommodate this commenter's suggestions have not been made.

DOE, in response to a petition for rulemaking, has proposed an amendment to the test procedures for refrigerators and refrigerator-freezers to reduce testing time and burden on manufacturers. The existing test procedures for single-control refrigerators and refrigerator-freezers require testing at three control settings and for multiple-control refrigerator-freezers at four control settings with a load (thermal mass) in the freezer. The proposed test procedures require testing at only two control settings and does not require a load in the freezer of automatic defrost units.

The proposed test procedures are expected to reduce testing time and burden by more than one-third. NBS experimentation has determined that energy consumption and energy factors measured via the proposed test procedures will be essentially identical to those determined according to the existing procedures. Consequently, revision of the test procedures for refrigerators and refrigerator-freezers will not affect previous test results or the levels of energy efficiency standards proposed by this notice.

Individual Product Class Analysis

Five comments received in response to the advance notice criticized DOE's establishment of only three classes of refrigerators and refrigerator-freezers. These commenters stated fundamental physical reasons for the establishment of additional classes of automatic-defrost refrigerator-freezers. DOE and NBS carefully analyzed these comments and, consequently, seven classes of electric refrigerators and refrigerator-freezers are proposed in section 4.1.1 of this notice. These classes are distinguished by performance-related features which affect both efficiency and utility of the unit. These features are: (1) type of freezer defrost system (manual or automatic), (2) freezer compartment temperature, (3) physical arrangement of compartments, and (4) availability of through-the-door service features.

As defined in the DOE test procedures, refrigerators are refrigeration products with a compartment for refrigerated storage of food at temperatures above 32°F which may have a compartment for the frozen storage of food at temperatures below 32°F and above 8°F. Refrigerator-freezers are refrigeration products with compartments for refrigerated storage of food at temperatures above 32°F and a compartment for frozen food storage at temperatures below 8°F. Since frozen food can be stored for longer periods of time at temperatures below 8°F than at temperatures above 8°F, DOE has concluded that the lower freezer compartment temperature provides additional utility to the consumer. Also, since lowering the freezer temperature increases heat leakage into the freezer and increases energy consumption of the refrigeration system, DOE has grouped refrigerators and refrigerator-freezers into separate classes.

DOE has determined that automatic defrost refrigeration products, those which do not require any action by the user to accomplish defrosting of the freezer, provide utility to the consumer. Automatic defrost products consume additional energy first, to melt the frost when performing a defrost cycle and, second, to remove the defrost heat from the cabinet in order to maintain compartment temperatures. Consequently, DOE has grouped automatic defrost and manual defrost units separately.

Automatic defrost refrigeration products have been segregated according to the location of the freezer compartments. DOE has determined that products with bottom or side freezers provide different utility to consumers than do units with top freezers.

Automatic defrost refrigerator-freezers with side freezers provide utility to consumers because of the opportunity for users to more conveniently locate items placed in both the fresh food and freezer compartments. Units with side freezers tend to have higher energy consumption than units with top freezers because the increased door seal area increases heat leakage into the cabinet. Also, since the bottom of the side freezer is located near the compressor and condenser, more heat rejected from these components leaks into the refrigerated space than with top freezer units.

Refrigerator-freezers with bottom freezers also tend to require more energy to operate than top freezers. Increased fan power is required to transport cold air from the bottom freezer up to the top of the fresh food compartment. Bottom freezers also absorb more heat rejected from the compressor and condenser than do top freezers since these components are located adjacent to the freezer compartment. Because of these fundamental differences which affect both utility and energy consumption, DOE has proposed separate classes for automatic defrost refrigerator-freezers with top, side, and bottom freezers.

In addition, certain models of top freezer and side freezer refrigerator-freezers incorporate dispensing services

which provide chilled water, ice, etc., without opening the door. Refrigerator doors which contain dispensing equipment cannot be insulated as well as doors without this feature. Also, electric heaters may be required to prevent condensation from occurring on the dispenser hardware. These factors combine to increase heat which is absorbed by the refrigerated space. Consequently, models with through-the-door services inherently consume more energy than other models. DOE has determined that the convenience associated with such dispenser designs constitutes a distinct utility to those consumers who want this feature, and separate classes have been established for refrigerator-freezer design configurations which provide these services.

Different classes of refrigerators and refrigerator-freezers have not been established for models with different refrigerated volumes. DOE is aware that the energy factor of a particular product tends to increase with increasing volume. This phenomenon is due to the fact that as the volume of a rectangular cabinet increases the ratio of surface area to volume decreases. Since heat transfer into the cabinet is directly related to surface area, two refrigerators of different volumes but with equivalent insulation and refrigeration system efficiency will have different energy factors. DOE has accounted for this relationship by proposing energy efficiency standards which increase linearly with volume. Variable standards are not proposed for units with bottom freezers and units with through the door services due to the availability of only a small range of different volumes. This concept assures that smaller units will not be penalized and all units must achieve proportionally the same increased efficiency improvement. Additional explanation of the determination of this relationship is provided in the "Engineering Analysis Document," TSD No. 5.

4.1.3 Economic Impacts of the Proposed Standards for Refrigerators and Refrigerator-Freezers. Economic benefits and burdens resulting from the proposed standards were assessed from consumer, manufacturer and national perspectives, as described in section 5 of this notice. Four alternative levels of standards were evaluated for each perspective. From this evaluation, the levels proposed in this notice were selected. Impacts resulting from these levels are presented herein. A more detailed presentation on impacts resulting from the levels which were not selected is provided in the "Economic Analysis Document," TSD No. 4.

Consumers

For each class of refrigerator and refrigerator-freezer, the average consumer will realize a lower life cycle cost (a decrease in the discounted total cost of product ownership and use) for higher efficiency regulated products as compared with unregulated products. The reduction in life cycle costs ranges from $91 for automatic defrost refrigerator-freezers with side freezer and through the door services, to $322 for automatic defrost refrigerator-Freezers with top freezer, corresponding to a 4 percent reduction and 21 percent reduction in life cycle costs, respectively.

Consumer payback period, the period of time elapsed before the higher purchase price of more energy efficient products is recouped through reduced energy costs, ranges from 0.54 years for manual defrost refrigerators to 0.79 years for refrigerator-freezers with manual defrost freezers.

Manufacturers

Impacts on refrigerator and refrigerator-freezer manufacturers resulting from standards at the proposed level were estimated. The effects are presented as the percentage of firms expected to be able to obtain sufficient funds through profit or short-term debt, during the 1981 through 1985 period, to make the capital investment necessary for January 1986 standards. Those firms not able to successfully finance compliance with standards by means of funds from earnings or loans may be able to use other methods such as sales of stocks or bonds, transfer of funds from other operating divisions, etc. Therefore, firms having low probabilities of success will not necessarily fail to meet the standards.

At the proposed level of standards, refrigerator and refrigerator-freezer manufacturers estimated to be able to obtain sufficient funds during the 1981 through 1985 period to make the capital investment necessary for January 1986 standards represent approximately 98 percent of current industry production. Included in those firms expected to be able to make the required capital investment are 99 percent of large manufacturers and 98 percent of medium-sized manufacturers. These estimates were developed using analytic techniques which examine the worst case impacts by using conservative assumptions about demand growth, market share and financing. Details of the analysis are provided in the "Economic Analysis Document," TSD No. 4.

Nation

Burdens and benefits from the national perspective encompass the impacts on consumers and manufacturers. In addition, the national perspective addresses those impacts which affect the collective national welfare. The most direct national impacts resulting from the proposed standards are: estimated energy savings; the discounted dollar value of those energy savings; the aggregate discounted consumer costs of more energy efficient products; and the net present value of the above costs and benefits.

Proposed standards on all classes of refrigerators and refrigerator-freezers combined are estimated to save between 3.64 and 7.56 Quadrillion Btu's (QBtu's) cumulative for the 1982 through 2005 period, valued between $6.2 billion and $9.1 billion in 1978 dollars. The aggregate increased cost of more energy efficient refrigerators and refrigerator-freezers during that same 1982 through 2005 period is estimated to be between $1.61 billion and $2.53 billion in 1978 dollars. Therefore, the national net present value of the proposed regulation on refrigerators and refrigerator-freezers is estimated at between $4.5 billion and $6.7 billion. These values are derived from use of the Residential Energy Use Forecasting Model described in section 5.3 of this notice and the "Economic Analysis Document," TSD No. 4.

4.2 Freezers

4.2.1 Summary. "Freezer" means a cabinet designed as a unit for the storage of food at temperatures of 0°F or below, having the ability to freeze food, and having a source of refrigeration requiring an electric energy input only.

The proposed energy efficiency levels for freezers are found in Table 4.2-1. Table 4.2-2 presents the alternate efficiency levels selected for analysis for 1981 and 1986. The levels selected for analysis for 1981 are derived from the 1978 shipment weighted energy factor (SWEF)—which is the summation of number of units of a particular basic model multiplied by the energy factor, divided by the total number of shipments within a class—for each class of freezers. Level 2 in 1981 corresponds to the SWEF in 1978. Level 1 is one standard deviation below the SWEF, while Level 3 and Level 4 are 1 and 2 standard deviations above the SWEF, respectively. The levels selected for analysis for 1986 are derived from a manufacturing cost estimating technique used to estimate materials, investment

and engineering costs required to market products of higher efficiencies in the 1986 time frame. Level 3 in 1986 corresponds to the maximum level which is technologically feasible and economically justified. A detailed explanation on the technological feasibility and economic justifiability can be found in the Engineering Analysis and Economic Analysis Documents, TSD No. 4 and No. 5, respectively. Levels 1 and 2 correspond to proportionally lower levels which have fewer design improvements required and correspond to lower first cost and generally higher life cycle costs.

Table 4.2-1 Energy Efficiency Levels for Freezers (Energy Factor, EF, ft³/kWh/24 hrs).

Product class	July 15, 1981	January 1, 1986
1 Chest freezer, manual defrost	6.18 + 0.337V	13.72 + 0.332V
2 Upright freezer, manual defrost	3.00 + 0.393V	10.85 + 0.342V
3 Upright freezer, automatic defrost	3.30 + 0.197V	8.07 + 0.093V

V Total Unadjusted Volume, expressed in ft³.

Note.—See rationale for variable standards in section 4.2.2.

Table 4.2-2.—*Alternate Efficiency Levels (Energy Factor, EF, ft³/kWh/24 hrs)*

Product class	Level	1	2	3	4
1 Chest freezer, manual defrost	1981	4.79 + 0.337V	6.18 + 0.337V	7.42 + 0.337V	8.66 + 0.337V
	1986	7.22 + 0.332V	11.12 + 0.332V	13.72 + 0.332V	
2 Upright freezer, manual defrost	1981	1.98 + 0.393V	3.00 + 0.393V	4.01 + 0.393V	5.02 + 0.393V
	1986	6.05 + 0.342V	8.35 + 0.342V	10.85 + 0.342V	—
3 Upright freezer, automatic defrost	1981	2.47 + 0.197V	3.30 + 0.197V	4.13 + 0.197V	4.95 + 0.197V
	1986	3.97 + 0.093V	6.87 + 0.093V	8.07 + 0.093V	

V Total unadjusted volume, expressed in ft³.

Level 4 corresponds to an advanced technology case which incorporates design options not on the market place in any great quantity or only in prototype stages at this time.

The rationale for selecting the proposed levels appears in sections 4.2.2 and 4.2.3.

4.2.2 Engineering Analysis.

Methodology

Key energy saving technologies used in the product efficiency analysis for freezers closely parallel those applicable to refrigerators and refrigerator-freezers. For upright models, foam substitution for fiberglass, compressor efficiency improvement, removal of evaporator fan heat from the refrigerated space, gasket improvement, and an increased evaporator and condenser surface area were employed when cost effective. For chest freezers, foam substitution for fiberglass in the lid, relocation of the condenser outside of the cabinet walls, and improvements to compressor motors were methods employed in the analysis.

A computer model, which integrates cabinet design and refrigeration system subroutines, was used to determine the performance of the improved designs. The computer model has been verified against a number of production and prototype freezer designs. A technical discussion of the computer model is contained in the "Engineering Analysis Document," TSD No. 5.

The manufacturing cost analysis assumed a facility consisting of four manufacturing lines for both large and small manufacturers. It was assumed that cabinet door lines were shared by the four production lines and that compressors were purchased from other manufacturers.

Cabinet equipment suitable for polyurethane foam substitution was identified and costs determined. Tooling changes for outer cabinet and liner changes to accommodate the foam substitution were costed. Tooling changes for mounting new purchased parts and other cabinet alterations were evaluated. Some plant costs were identified associated with the additional space required for foaming equipment.

The increased cost per unit of substituting foam material for fiberglass was assessed and the increased labor costs estimated. Part purchased for compressor improvement and anti-sweat heater switch were estimated as appropriate for each efficiency level. These were combined with per unit investment costs to obtain estimates of the total added cost to achieve each efficiency level evaluated. These cost-efficiency relationships are given in the "Engineering Analysis Document," TSD No. 5.

Maximum technologically feasible energy efficiency levels were developed using advanced technologies. To achieve these maximum technologically feasible levels for freezers, the thickness of polyurethane foam insulation was increased throughout the cabinet design, along with increased evaporator and condenser surface areas. High efficiency compressors and fan motors were used, and double gasket systems were incorporated throughout. For the upright automatic defrost freezer, an improved inner distribution system reducing the fan power requirements was employed.

The maximum technologically feasible energy levels for 1986 for freezers are shown in Table 4.2-3 below:

Table 4.2-3 Maximum Technologically Feasible Levels for Freezers (Energy Factor, EF, ft³/kWh/24 hrs).

Product class	Level
1 Chest freezer, manual defrost	17.5 + .332V
2 Upright freezer, manual defrost	16.1 + .342V
3 Upright freezer, automatic defrost	16.1 + .093V

V Total Unadjusted Volume, expressed in ft³.

Test Procedures

The test procedures for freezers found at 10 CFR Part 430, Subpart B, provide a standardized method for calculating the efficiency (energy factor, EF) of freezers by measuring the adjusted refrigerated volume and the adjusted electrical energy consumption in a 24-hour period. The measured energy consumption is adjusted for chest and upright freezers to correlate the test results to typical energy household consumption. Energy factors have dimensions of cubic feet per kilowatt hour per 24 hours (ft³/kWh/24 hrs) and are useful indicators of freezer efficiency since they account for differences in energy consumption between freezers of different volumes.

No comments addressing the freezer test procedures were received in response to the advance notice, however, DOE is proposing an amendment to the test procedures for freezers to reduce testing time and burden on manufacturers. The existing test procedures for freezers require testing at three control settings. The proposed test procedures require testing at only two control settings. These procedures are expected to reduce testing time and burden by about one-third. NBS has determined that energy consumption and energy factors measured via the proposed test procedures will be essentially identical to those determined according to the existing procedures. Consequently, the revision of the test procedures for freezers will not affect previous test results or the levels of energy efficiency standards proposed by this notice.

Individual Product Class Analysis

Three classes of freezers are specified in section 4.2.1 of this notice. These classes are distinguished by performance-related features which affect efficiency and utility. These features are:

(1) configuration,

(2) type of defrost system—manual, automatic.

The configuration of the unit (chest or upright) provides utility which affects efficiency. Upright freezers offer greater accessibility to the freezer contents and more efficient use of floor space than chest type freezers. However, the test procedures assign different usage factors for chest and upright freezers to account for heat leakage into the cabinet when the door is opened. The adjusted energy consumption of upright freezers should tend to be higher than the adjusted energy consumption of chest freezers because of the assigned usage factors. Consequently, DOE has grouped these products into separate classes.

Another performance-related feature which affects utility and efficiency is the defrost system which determines the extent of action by the user needed to accomplish defrosting. Automatic defrost units do not require any user action to accomplish defrosting, and thus provide the consumer with utility not provided by manual defrost units. Automatic defrost units, as compared to manual defrost units, will have lower energy factors because of the additional energy required to melt the frost and to remove the defrost heat to maintain the cabinet temperature. DOE is not aware of any chest freezers which offer the automatic defrost feature; therefore, today's rule proposes a separate class only for automatic defrost upright freezers.

Different classes of freezers have not been established for models with different volumes. DOE is aware that the energy factor of a particular product tends to increase with increasing volume. As with refrigerators, DOE has accounted for this relationship by proposing energy efficiency standards which increase linearly with volume. A detailed discussion of this relationship is found in the "Engineering Analysis Document," TSD No. 5.

4.2.3 Economic Impacts of the Proposed Standards for Freezers. Economic benefits and burdens resulting from the proposed standards were assessed from consumer, manufacturer and national perspectives as described in section 5 of this notice. Four alternative levels of standards were evaluated for each perspective, and from this evaluation, the levels proposed in this notice were selected. Impacts resulting from these levels are presented herein. A more detailed presentation on impacts resulting from the levels which were not selected is provided in the "Economic Analysis Document," TSD No. 4.

Consumers

For each class of freezers, the average consumer will realize a lower life cycle cost (a decrease in the discounted total cost of product ownership and use) for higher efficiency regulated products as compared with unregulated products. The reduction in life cycle costs ranges from $295 for manual defrost chest freezers to $546 for manual defrost upright freezers, corresponding to a 23 percent reduction and 21 percent reduction in life cycle costs, respectively.

Consumer payback period, the period of time elapsed before the higher purchase price of more energy efficient products is recouped through reduced energy costs, ranges from 0.19 years for automatic defrost, upright freezers to 0.44 years for manual defrost, chest freezers.

Manufacturers

Impacts on freezer manufacturers resulting from standards at the proposed level were estimated. These effects are presented as the percentage of firms expected to be able to obtain sufficient funds through profit or short-term debt, during the 1981 through 1985 period, to make the capital investment necessary for January 1986 standards. Those firms not able to successfully finance compliance with standards by means of funds from earnings or loans may be able to use other methods such as sales of stocks or bonds, transfer of funds from other operating divisions, etc. Therefore, firms having low probabilities of success will not necessarily fail to meet the standards.

At the proposed level of standards, freezer manufacturers estimated to be able to obtain sufficient funds during the 1981 through 1985 period to make the capital investment necessary for January 1986 standards represent approximately 75 percent of current industry production. Included in those firms expected to be able to make the required capital investment are 82 percent of large manufacturers. These estimates were developed using analytic techniques which examine the worst case impacts by using conservative assumptions about demand growth, market share and financing. Details of the analysis are provided in the "Economic Analysis Document," TSD No. 4.

Nation

Burdens and benefits from the national perspective encompass the impacts on consumers and manufacturers. In addition, the national perspective addresses those impacts which affect the collective national welfare. The most direct national impacts resulting from the proposed standards are: estimated energy savings; the discounted dollar value of those energy savings; the aggregate discounted consumer costs of more energy efficient products; and the net present value of the above costs and benefits.

Proposed standards on all classes of freezers combined are estimated to save between 0.82 and 1.4 QBtu's during the 1982 through 2005 period, valued between $1.4 billion and $2.0 billion in 1978 dollars. The aggregate increased cost of more energy efficient freezers during that same 1982 through 2005 period is estimated to be between $0.4 billion and $0.6 billion in 1978 dollars. Therefore, the national net present value of the proposed regulation on freezers is estimated at between $1.0 billion and $1.4 billion. These values are derived from use of the Residential Energy Use Forecasting Model described in section 5.3 of this notice and the "Economic Analysis Document," TSD No. 4.

4.3 Clothes Dryers

4.3.1 Summary. "Clothes dryers" mean an electric clothes dryer or gas clothes dryer. "Electric clothes dryer" means a cabinet like product designed to dry fabrics in a tumble-type drum with forced air circulation. The heat source is electricity and the drum and blower(s) are driven by an electric motor(s). "Gas clothes dryer" means a cabinet-like product designed to dry fabrics in a tumble-type drum with forced air circulation. The heat source is gas and the drum and blower(s) are driven by an electric motor(s).

The proposed energy efficiency levels for clothes dryers are found in Table 4.3–1. Table 4.3–2 presents the alternate efficiency levels selected for analysis for 1981 and 1986. The levels selected for analysis for 1981 are derived from the 1978 shipment weighted energy factor (SWEF)—which is the summation of number of units of a particular basic model multiplied by the energy factor, divided by the total number of shipments within a class—from a manufacturing cost estimating technique used to estimate materials, investment, and engineering costs required to market products of higher efficiencies in the 1986 time frame. Level 3 in 1986 corresponds to the maximum level

which is technologically feasible and economically justified. A detailed explanation on the technological feasibility and economic justifiability can be found in the Engineering Analysis and Economic Analysis Documents, TSD No. 4 and No. 5, respectively. Levels 1 and 2 correspond to proportionately lower levels which have fewer design improvements required and correspond to lower first cost and generally higher life cycle costs. Level 4 corresponds to an advanced technology case which incorporates design options not on the market place in any great quantity or only in prototype stages at this time.

Table 4.3–1 Energy Efficiency Levels for Clothes Dryers (Energy Factor, EF, lb/kWh).

Product class	July 15, 1981	January 1, 1986
1. Electric, standard size	2.96 – 0.048V	3.31 – 0.048V
2. Electric, compact size, 120 Volt	2.63	2.85
3. Electric, compact size, 240 Volt	2.35	2.54
4. Gas	2.71 – 0.048V	2.91 – 0.048V

V = Drum Volume, expressed in ft³
Note.—See rationale for variable standards in section 4.3.2

Table 4.3–2—*Alternate Efficiency Levels (Energy Factor, EF, lb/kWh)*

Product class	Level	1	2	3	4
1. Electric, standard size	1981	2.90 – 0.048V	2.95 – 0.048V	3.02 – 0.048V	3.08 – 0.048V
	1986	3.01 – 0.048V	3.11 – 0.048V	3.31 – 0.048V	
2. Electric, compact size, 120 Volts	1981	2.54	2.63	2.72	2.81
	1986		2.75	2.85	
3. Electric, compact size, 240 Volts	1981	2.34	2.35	2.36	2.37
	1986			2.54	
4. Gas	1981	2.62 – 0.048V	2.71 – 0.048V	2.80 – 0.048V	2.89 – 0.048V
	1986			2.91 – 0.048V	

V = Drum volume, expressed in ft³.

The rationale for selecting the proposed levels appears in sections 4.3.2 and 4.3.3.

4.3.2 Engineering Analysis.

Methodology

Four design options were evaluated for improving the efficiency of clothes dryers. These were:

- Reduced drying temperatures:
- Automatic termination with moisture sensing;
- Automatic termination by temperature sensing; and
- Insulation.

The efficiency improvements for these design options were drawn from NBS test data. The use of automatic termination, either through temperature or moisture sensing, is covered in the proposed test procedure amendments discussed in this section, and the associated credits for these options were used in estimating the efficiency improvements. The use of improved insulation, coupled with reduced drying temperatures, was estimated to give a total of 7% improvement in efficiency.

The manufacturing cost analysis assumed one large manufacturer with seven production lines and six small manufacturers with two production lines each. The large manufacturer was assumed to have lines specifically dedicated to electric or gas clothes dryers, while small manufacturers were assumed to share a single line for both types. Compact clothes dryers are assumed to be built on a separate line.

The use of sensors to automatically terminate cycles was costed assuming new tooling to manufacture a bracket for mounting the sensors, purchasing of the sensors, and additional labor to install the sensors. Reduced drying temperatures impact the product's utility by increasing the drying times but should not increase manufacturing cost. Insulation added to the dryer requires major investment in capital equipment and tooling. The analysis assumed four welding fixtures per production line to weld studs onto the interior of the cabinet for holding the insulation; and additional station for finishing the welded pieces; an additional station for additing insulation; and the necessary chains and belts to carry the parts from one station to the other. In addition, an allowance was made for additional area required by added production facilities. This estimate assumed that the additional space could be found within the existing plant.

The costs of additional labor were also added to allow for the welding, painting and insulation installation. The investment costs were amortized as appropriate for the type of investment and combined with the per unit cost estimates for added materials, labor and purchases parts to estimate the final added costs for each efficiency level. These costs were used with the corresponding efficiency levels to develop cost efficiency curves which are shown in the "Engineering Analysis Document," TSD No. 5.

For clothes dryers, the maximum technologically feasible energy efficiency levels utilize the four design options discussed in this section. The maximum technologically feasible energy efficiency levels for 1986 for clothes dryers are shown in Table 4.3–3 below.

Table 4.3–3 Maximum Technologically Feasible Levels for Clothes Dryers (Energy Factor, EF, lb/kWh).

Product class	Level
1. Electric, standard size	3.34 – 0.048V
2. Electric, compact size, 120 Volts	3.01
3. Electric, compact size, 240 Volts	2.72
4. Gas	3.03 – 0.048V

V = Drum Volume, expressed in ft³

Test Procedures

The test procedures for clothes dryers found at 10 CFR Part 430, Subpart B, provide a standardized method to calculate the efficiency (energy factor, EF) of clothes dryers by measuring the energy consumption per cycle. Energy factors have dimensions of pounds of clothes per kilowatt-hour (lb/kWh) [3-pound load for compact dryers and 7-pound load for standard dryers] and are useful indicators of clothes dryer efficiency since they account for the differences in energy consumption between clothes dryers of different capacities and designs.

Several comments specifically addressing the clothes dryer test procedures were received in response to the advance notice. These comments relate to the following areas: (1) energy consumption associated with automatic termination of the drying cycle, (2) test voltage for electric dryers which can operate at any of several voltages, and (3) variability of test results. Based upon NBS analysis of the above comments, DOE determined that the test procedures for clothes dryers should be amended. Proposed amendments to the clothes dryer test procedure address the above comments. The proposed energy efficiency levels for clothes dryers, in today's notice, are based upon the proposed amendment to the clothes dryer test procedures. The proposed amendments provide for measuring different energy consumptions for different types of termination controls by means of different field use factors in the equations for energy consumption per cycle. The energy saving potential for automatic termination is measurable

using the proposed test procedures. For clothes dryers which can operate at any of several voltages, the amendments propose that testing be required at the highest rated voltage. To reduce test variability, the clothes dryer proposed amendment contains recommendations related to test clothes, i.e., preconditioning of new test cloths, test cloth specifications, and moisture content of the test cloth at the start of the test.

Inidividual Product Class Analysis

Four classes of clothes dryers are specified in section 4.3.1 of this notice. These classes are distinguished by the type of energy consumed and the size of the unit. Clothes dryers are segregated based on the type of fuel used (gas or electric). Electric clothes dryers are further divided into standard size (greater than 4.4 ft^3 drum capacity) and compact size (less than 4.4 ft^3 drum capacity) clothes dryers because the test conditions are different for compact and standard dryers, thus resulting in appreciable differences in the energy factor, which is based on pounds of clothes dried per kilowatt hour of electricity used. Compact dryers are further divided into two classes according to operating voltage (120V and 240V) in order to preserve the product's utility (faster drying time of the less efficient 240 volt unit) which constrains the technical design that can be implemented. For the reasons stated above, DOE proposes that the classes for clothes dryers shall be gas; electric compact, 120V; and electric compact, 240V; and electric standard size.

Three comments indicated a need to set energy efficiency standards for clothes dryers which vary with dryer drum capacity, because under the DOE test procedures, clothes dryer efficiency decreases in direct proportion to the increase in dryer drum capacity.

DOE is aware that the efficiency of standard size clothes dryers decreases with increasing volume, due to two facts: one, as capacity increases, there is an increase in the mass of the dryer drum relative to the mass of clothes; and two, due to air flow paths which tend to bypass small clothes loads in larger drums. DOE has accounted for this relationship by proposing energy efficiency standards which decrease linearly with volume. This concept assures that larger units will not be penalized and all units must achieve proportionally the same increased efficiency improvement. Because of the uniformity of the size of the drum of different basic models, it is not necessary to similarly correct for volume dependence for compact dryers. Additional explanation of the determination of these relationships is provided in the "Engineering Analysis Document," TSD No. 5.

4.3.3 Economic Impacts of the Proposed Standards for Clothes Dryers. Economic benefits and burdens resulting from the proposed standards were assessed from consumer, manufacturer and national perspectives as described in section 5 of this notice. Four alternative levels of standards were evaluated for each perspective, and from this evaluation, the levels proposed in this notice were selected. Impacts resulting from these levels are presented herein. A more detailed presentation on impacts resulting from the levels which were not selected is provided in the "Economic Analysis Document," TSD No. 4.

Consumers

For each class of clothes dryers, the average consumer will realize a lower life cycle cost (a decrease in the discounted total cost of product ownership and use) for higher efficiency regulated products as compared with unregulated products. The reduction in life cycle costs ranges from $6 for gas clothes dryers to $47 for electric, standard size clothes dryers, corresponding to a 2 percent and 6 percent reduction in life cycle costs, respectively.

Consumer payback period, the period of time elapsed before the higher purchase price of more energy-efficient products is recouped through reduced energy costs, ranges from 2.8 years for electric, standard size, to 5.5 years for electric, compact size, 120 volt.

Manufacturers

Impacts on clothes on clothes dryer manufacturers resulting from standards at the proposed level were estimated. These effects are presented as the percentage of firms expected to be able to obtain sufficient funds through profit or short-term debt, during the 1981 through 1985 period, to make the capital investment necessary for January 1986 standards. Those firms not able to successfully finance compliance with standards by means of funds from earnings or loans may be able to use other methods such as sales of stocks or bonds, transfer of funds from other operating divisions, etc. Therefore firms having low probabilities of success will not necessarily fail to meet the standards.

At the proposed level of standards, clothes dryer manufacturers estimated to be able to obtain sufficient funds during the 1981 through 1985 period to make the capital investment necessary for January 1986 standards respresent approximately 99 percent of current industry production. Included in those firms expected to be able to make the required capital investment are 99 percent of large manufacturers, 99 percent of medium-sized manufacturers, and 91 percent of small manufacturers. These estimates were developed using analytic techniques which examine the worst case impact by using conservative assumptions about demand growth, market share and financing. Details of the analysis are provided in the "Economic Analysis Document," TSD No. 4.

Nation

Burdens and benefits from the national perspective encompass the impacts on consumers and manufacturers. In addition, the national perspective addresses those impacts which affect the collective national welfare. The most direct national impacts resulting from the proposed standards are: estimated energy savings; the discounted dollar value of those energy savings; the aggregate discounted consumer costs of more energy efficient products; and the net present value of the above costs and benefits.

Proposed standards on all classes of clothes dryers combined are estimated to save between 0.32 QBtu's and 0.59 QBtu's during the 1982 through 2005 period, valued between $0.5 billion and $0.7 billion in 1978 dollars. The aggregate increased cost of more energy efficient clothes dryers during that same 1982 through 2005 period is between $0.2 billion and $0.3 billion in 1978 dollars. Therefore, the national net present value of the proposed regulation on clothes dryers is estimated at between $0.3 billion and $0.4 billion in 1978 dollars. These values are derived from use of the Residential Energy Use Forecasting Model described in section 5.3 of this notice and the "Economic Analysis Document," TSD No. 4.

4.4 Water Heaters

4.4.1 Summary. "Water heater" means an automatically controlled thermally insulated vessel designed for heating water and storing heated water, which utilizes either oil, gas, or electricity as the fuel or energy source for heating the water, which is designed

to produce hot water at a temperature of less than 180°F.

The proposed energy efficiency levels for water heaters are found in Table 4.4–1. Table 4.4–2 presents the alternate efficiency levels selected for analysis for 1981 and 1986.

Table 4.4–1 Energy Efficiency Levels for Water Heaters (Energy Factor, EF).

Product class	July 15, 1981	January 1, 1986
1. Electric	0.860 – 0.0013V	0.995 – 0.0013V
2. Gas	0.546 – 0.0018V	0.653 – 0.000625V
3. Oil	No Standard.	No Standard.

V = Storage Volume, expressed in gallons.

Note—See rationale for variable standards in section 4.4.2.

Table 4.4–2.—*Alternate Efficiency Levels (Energy Factor, EF)*

Product class	Level	1	2	3	4
1. Electric	1981	0.828 – 0.0013V	0.860 – 0.0013V	0.892 – 0.0013V	0.923 – 0.0013V
	1986	0.946 – 0.0013V	0.986 – 0.0013V	0.995 – 0.0013V	
2. Gas	1981	0.508 – 0.0018V	0.546 – 0.0018V	0.584 – 0.0018V	0.621 – 0.0018V
	1986	0.633 – 0.000625V	0.643 – 0.000625V	0.653 – 0.000625V	
3. Oil	NA				
	NA				

V = Storage Volume, expressed in gallons.
NA = Not available.

The levels selected for analysis for 1981 are derived from the 1978 shipment weighted energy factor (SWEF)—which is the summation of number of units of a particular basic model multiplied by the energy factor, divided by the total number of shipments within a class—for each class of water heaters. Level 2 in 1981 corresponds to the SWEF in 1978. Level 1 is one standard deviation below the SWEF, while Level 3 and Level 4 are 1 and 2 standard deviations above the SWEF, respectively. The levels selected for analysis for 1986 are derived from a manufacturing cost estimating technique used to estimate materials, investment and engineering costs required to market products of higher efficiencies in the 1986 time frame. Level 3 in 1986 corresponds to the maximum level which is technologically feasible and economically justified. A detailed explanation of the technological feasibility and economic justifiability can be found in the Engineering Analysis and Economic Analysis Documents, TSD No. 4 and No. 5, respectively. Levels 1 and 2 correspond to proportionally lower levels which have fewer design improvements required and correspond to lower first cost and generally higher life cycle costs. Level 4 corresponds to an advanced technology case which incorporates design options not on the market place in any great quantity or only in prototype stages at this time.

The rationale for selecting the proposed levels appears in sections 4.4.2 and 4.4.3.

No standards are proposed today for the class of oil water heaters. This is based largely on the small number of oil water heaters being produced today by generally small manufacturers and because many older oil water heaters are being replaced by other classes of water heaters; consequently, it was determined not to be economically justified to set standards for oil water heaters.

4.4.2 Engineering Analysis.

Methodology

In performing the efficiency improvement analysis, the available technology options for improving the efficiencies of water heaters are:

- Improved insulation;
- Increased flue baffling with reduced burner input;
- Vent dampers and intermittent ignition devices (IIDs); and
- Heat traps.

In the analysis of electric water heaters various efficiency levels were projected by using improved insulation either in the form of higher density and thicker fiberglass insulation or the use of foamed polyurethan insulation. The analysis was carried out using a 52 gallon upright unit as a baseline. The highest energy factor achieved with available technology incorporated foam insulation and heat traps.

For the analysis of gas-fired water heaters, it was assumed that increased flue baffling for improved heat transfer plus reduced burner input would be implemented at all efficiency levels. This was accompanied by varying levels of improved insulation as described above for electric water heaters. The highest efffiency level evaluated employed a vent damper, IID, and advanced fiberglass insulation.

Estimates of the energy factors which could be achieved using various combinations of these design options were made using data from computer simulations plus laboratory measurements. These were complemented by engineering analysis based on published energy factors for various models of water heaters obtained from the California list of approved water heaters, advertisements for water heaters disclosing insulation thickness and energy factors, information from manufacturers on insulation used, and various water heater configurations on which operational data was available. The efficiency improvements from the use of heat traps were based on the DOE test procedure values. Vent damper and IID credits were estimated by engineering analysis based on laboratory test data.

The manufacturing cost analysis assumed that large manufacturers had three major production lines plus one specialty line, and small manufacturers had a major production line plus one specialty line. It was assumed that both gas and electric units could be manufactured on the same line.

Major changes in implementing design options dealt primarily with the change in amount of insulation used. To increase fiberglass insulation thickness, costs included changes to existing tooling to manufacture new size insulation jackets, increased material costs for added jacket area and additional insulation, and increased assembly line time due to handling thicker and denser insulations. It was assumed that existing presses would be able to handle the larger jacket pieces. A major capital equipmemt investment is required for foamed insulation. For costing purposes it was assumed that a manufacturer would elect to foam all manufactured water heaters of one class after making the initial decision to go to foam. The cost of this equipment was amortized over the production volumes of the product class being analyzed.

To improve the efficiency of gas-fired water heaters by reducing burner input and increasing flue baffling, it was assumed that tooling for manufacturing only the modified flue baffle was required.

In order to implement a design option employing an intermittent ignition device and a vent damper it was assumed that a manufacturer would purchase both parts and would make an investment in tooling for making a bracket to mount the IID. In addition, added labor costs for the installation of the two items were included in the costs. The design option employing a heat trap assumed that the heat trap would be purchased and additional labor would be required for installing it. These manufacturing costs were used with the efficiency levels estimated as described above to generate cost efficiency relationships for water heaters. These cost efficiency relationships and their derivation are described in detail in the "Engineering Analysis Document," TSD No. 5.

The maximum technologically feasible energy efficiency levels for 1986 for water heaters are shown in Table 4.4—3

below. To achieve the maximum technologically feasible efficiency level for a gas-fired water heater, manufacturers must convert their product lines to use foam insulation and to go to a condensing design.

Table 4.4–3 Maximum Technologically Feasible Energy Efficiency Level for Water Heaters (Energy Factor, EF).

Product class	Level
1. Electric	0.979–5.56 $\times 10^{-4}$ V
2. Gas	0.885–6.5 $\times 10^{-4}$ V
3. Oil	N/A

V=Storage Volume, expressed in gallons.

Condensing may be achieved either by use of a low thermal mass side-arm heater, which will also reduce standby losses, or by use of a power vent or power burner with condensing and existing center flue designs. For electric water heaters, the maximum technologically feasible level covered by the existing test procedures would be achieved by foam insulation plus heat traps. Recently a heat pump water heater has been introduced in the market. However, the existing DOE test procedures do not evaluate the performance of this product. Because the performance of a heat pump water heater is different than that of a standard electric water heater, a new class would be established when amendments to the test procedure are promulgated. For these reasons, maximum technologically feasible for electric water heaters does not reflect the incorporation of the heat pump water heater. In addition, for both the gas and the alternative electric water heater configurations, the suitability of the maximum technologically feasible unit for use in the retrofit market is questionable and a requirement that all units be manufactured to this level would have severe consumer utility impacts in that replacements would not be able to be easily adaptable to existing size constraints within the building.

Test Procedures

The test procedures for water heaters found at 10 CFR Part 430, Subpart B, are used to measure key operating characteristics which include:

(1) Recovery efficiency, the ratio of the heat transferred to the water to (a) the energy input to the heating elements (for electric water heaters); or (b) the heat content of the fuel consumed by the burners (for gas or oil water heaters);

(2) Standby loss, the ratio of the heat loss per hour to the heat content of the stored water above room temperature;

(3) Average daily energy consumption;

(4) First hour rating, the maximum volume of hot water which can be delivered at a 90° F temperature rise in a 1-hour period; and

(5) Daily hot water energy consumption.

By using the test procedures, the energy factor as a management of efficiency for a water heater can be derived. The energy factor for a water heat is the quotient of the energy content in the average daily hot water usage divided by the average daily energy input to the water heaters. Therefore, DOE proposes to use the energy factor as the basis for energy efficiency standards for water heaters.

One electric utility stated that for off-peak rate structures to be successful, homeowners need 80- to 150-gallon water heaters, which may be eliminated by the existing test procedures unless they are changed or the energy standard for water heaters varies with capacity. Three comments expressed concern that the DOE test procedures for water heaters penalize the larger storage-type water heaters. The comments suggested that there is a possibility that storage-type water heaters will be driven from the market place, thereby depriving consumers of the opportunity to take advantage of time-of-day electric rates. One comment urged DOE to develop a measure of efficiency which includes first hour supply rating. DOE is proposing energy efficiency levels that vary with capacity in order not to discriminate against larger storage water heaters. The first hour supply rating test procedures for water heaters have been amended in the final test procedures for water heaters prescribed on September 7, 1979 (44 FR 52632).

A manufacturer and an electric utility company claim that first-hour supply rating for water heaters is meaningless to the concept of energy conservation and should not be part of the standard. Today's proposed standard for water heaters does not use first-hour supply rating to measure efficiency.

Individual Product Class Analysis

Three classes of water heaters are specified in section 4.4.1 of this notice. These classes are distinguished by the type of energy consumed, i.e., gas, electric or oil. Efficiencies of water heaters vary widely depending on fuel type and storage volume. Without distinct classes by fuel type, certain products using a specific fuel type could be eliminated from the market place.

Different classes of water heaters have not been established for models with different storage volumes. DOE is aware that the energy factor of a particular product tends to decrease with increasing storage volume. DOE has accounted for this relationship by proposing energy efficiency standards which decrease linearly with an increase of storage volume. Additional explanations of the determination of these curves and classes are provided in the "Engineering Analysis Document," TSD No. 5.

Three comments expressed concern that the classes of water heaters identified in the advance notice would eliminate off-peak-type water heaters. Other comments urged the consideration of water heater capacity and design in establishing product classes. With the establishment of efficiency standards by volume, DOE has addressed these comments in today's proposed rule.

4.4.3 Economic Impacts of the Proposed Standards for Water Heaters. Economic benefits and burdens resulting from the proposed standards were assessed from consumer, manufacturer and national perspectives as described in section 5 of this notice. Four alternative levels of standards were evaluated for each perspective, and from this evaluation, the levels proposed in this notice were selected. Impacts resulting from these levels are presented herein. A more detailed presentation on impacts resulting from the levels which were not selected is provided in the "Economic Analysis Document," TSD No. 4.

Consumers

For each class of water heaters, the average consumer will realize a lower life cycle cost (a decrease in the discounted total cost of product ownership and use) for higher efficiency regulated products as compared with unregulated products. The reduction in life cycle costs ranges from $130 for gas water heaters to $170 for electric water heaters, corresponding to a 15 percent and 8 percent reduction in life cycle costs, respectively.

Consumer payback period, the period of time elapsed before the higher purchase price of more energy-efficient products is recouped through reduced energy costs, ranges from 0.73 years for electric water heaters to 1.1 years for gas water heaters.

Manufacturers

Impacts on water heater manufacturers resulting from standards at the proposed level were estimated. These effects are presented as the percentage of firms expected to be able

to obtain sufficient funds through profit or short-term debt, during the 1981 through 1985 period, to make the capital investment necessary for January 1986 standards. Those firms not able to successfully finance compliance with standards by means of funds from earnings or loans may be able to use other methods such as sales of stocks or bonds, transfer of funds from other operating divisions, etc. Therefore, firms having low probabilities of success will not necessarily fail to meet the standards.

At the proposed level of standards, water heater manufacturers estimated to be able to obtain sufficient funds during the 1981 through 1985 period to make the capital investment necessary for January 1986 standards represent approximately 80 percent of current industry production. Included in those firms expected to be able to make the required capital investment are 85 percent of large manufacturers. These estimates were developed using analytic techniques which examine the worst case impacts by using conservative assumptions about demand growth, market share and financing. Details of the analysis are provided in the "Economic Analysis Document," TSD No. 4.

Nation

Burdens and benefits from the national perspective encompass the impacts on consumers and manufacturers. In addition, the national perspective addresses those impacts which affect the collective national welfare. The most direct national impacts resulting from the proposed standards are: estimated energy savings; the discounted dollar value of those energy savings; the aggregate discounted consumer costs of more energy efficient products; and the net present value of the above costs and benefits.

Proposed standards on all classes of water heaters combined are estimated to save between 3.87 QBtu's and 5.91 QBtu's during the 1982 through 2005 period, valued between $5.9 billion and $6.6 billion in 1978 dollars. The aggregate increased cost of more energy efficient water heaters during that same 1982 through 2005 period is between $0.5 billion and $0.6 billion in 1978 dollars. Therefore, the natonal net present value of the proposed regulation on water heaters is estimated at between $5.4 billion and $6.0 billion in 1978 dollars. These values are derived from use of the Residential Energy Use Forecasting Model described in section 5.3 of this notice and the "Economic Analysis Document," TSD No. 4.

4.5 Room Air Conditioners

4.5.1 Summary. "Room air conditioner" means a consumer product which is powered by a single phase electric current, which is an encased assembly designed as a unit for mounting in a window or through the wall for the purpose of providing delivery of conditioned air to an enclosed space, which is not a "packaged terminal air conditioner." It includes a prime source of refrigeration and may include a means for ventilating and heating.

"Packaged terminal air conditioner" means a wall sleeve and a separate unencased builder specified combination of heating and cooling assemblies intended for mounting through the wall. It includes a prime source of refrigeration, separable outdoor louvers, forced ventilation, and heating availability by builders choice of hot water, steam or electricity.

The proposed energy efficiency levels for room air conditioners are found in Table 4.5–1. Table 4.5–2 presents the alternate efficiency levels selected for analysis for 1981 and 1986. The levels selected for analysis for 1981 are derived from the 1978 shipment weighted energy factor (SWEF)—which is the summation of number of units of a particular basic model multiplied by the energy factor, divided by the total number of shipments within a class—for each class of room air conditioners. Level 2 in 1981 corresponds to the SWEF in 1978. Level 1 is one standard deviation below the SWEF, while Level 3 and Level 4 are 1 and 2 standard deviations above the SWEF, respectively. The levels selected for analysis for 1986 are derived from a manufacturing cost estimating technique used to estimate materials, investment and engineering costs required to market products of higher efficiencies in the 1986 time frame. Level 3 in 1986 corresponds to the maximum level which is technologically feasible and economically justified.

Table 4.5–1 Energy Efficiency Levels for Room Air Conditioners (Energy Efficiency Ratio, EER, Btu/Watt-hr).

Product class	July 15, 1981	January 1, 1986
1 With outdoor side louvers; capacity of 6000 Btu/hr or less.	6.5	8.4
2. With outdoor side louvers; capacity greater than 6000 Btu/hr but less than 20,000 Btu/hr	7.5	9.5
3. With outdoor side louvers; capacity of 20,000 Btu/hr or greater	6.7	8.4
4 Without outdoor side louvers or reverse cycle	6.7	9.0

Table 4.5–2.—*Alternative Efficiency Levels (Energy Efficiency Ratio, EER, Btu/Watt-hr)*

Product class	Level	1	2	3	4
1. With outdoor side louvers; capacity of 6,000 Btu/hr or less.	1981	5.4	6.3	7.1	7.9
	1986	7.5	8.4	9.1	———
2. With outdoor side louvers; capacity greater than 6,000 Btu/hr but less than 20,000 Btu/hr	1981	6.0	7.2	8.3	9.5
	1986	8.6	9.1	9.5	———
3. With outdoor side louvers; capacity of 20,000 Btu/hr or greater.	1981	6.1	6.6	7.2	7.7
	1986	7.5	8.0	8.4	———
4 Without outdoor side louvers; or reverse cycle	1981	5.4	6.5	7.6	8.6
	1986	8.6	9.1	9.5	———

A detailed explanation on the technological feasibility and economic justifiability can be found in the Engineering Analysis and Economic Analysis Documents, TSD No. 4 and No. 5, respectively. Levels 1 and 2 correspond to proportionally lower levels which have fewer design improvements required and correspond to lower first cost and generally higher life cycle costs. Level 4 corresponds to an advance technology case which incorporates design options not on the market place in any great quantity or only in prototype stages at this time.

The rationale for selecting the proposed levels appears in sections 4.5.2 and 4.5.3.

4.5.2 Engineering Analysis.

Methodology

The room air conditioner engineering efficiency analysis utilized a component computer model which explicitly treats all major system elements. A detailed discussion of the computer model is contained in the "Engineering Analysis Document," TSD No. 5. Energy savings were identified through the use of: increased heat exchanger surface area, improved fan motor efficiency, and improved compressor efficiency. Condenser surface area was increased to the limit of standard window dimensions. Evaporator surface area was increased to a maximum to provide

approximately 54°F evaporating temperature under standard test conditions. Evaporating temperatures above that level are judged to result in unacceptable dehumidification. Cabinet sizes to accommodate the increased heat exchanger frontal area were assumed to be limited to the present five different cabinets plus an additional larger cabinet to permit increased efficiency in the largest class of room air conditions. Because of increases in heat exchanger surface area, the compressor capacity was reduced to maintain the rated unit capacity. When standard compressor increments would meet the design criteria, they were incorporated; otherwise, the stroke of the existing compressor was reduced to achieve the required rating. Whenever shaded pole fan motors were used on the baseline units, higher efficiency permanent split capacitor motors were substituted. Fan diameter and blade pitch were adjusted to achieve near optimal air volume for the increased heat exchanger surface areas as described above.

The manufacturing facility was assumed to consist of five assembly lines capable of manufacturing five chassis with a variety of cabinet heights. Increased investment, due to the addition of a larger cabinet, was included along with tooling changes for any fan or compressor change requiring new mounting brackets. Increased costs for fan motors and fan blades to maintain near optimum air volume as well as reduced costs for the compressor were estimated.

As the that transfer surface areas are increased to dimensional and performance constrained limits, the remaining gains in efficiency are left to the compressor and fan systems. To determine maximum technologically feasible efficiency levels, a compressor with an energy efficiency ratio of 11 was used (the highest compressor efficiency available in January 1980 was just under 10). Permanent split capacitor fans with improved air induction and exhaust systems to reduce fan systems losses were also employed. The maximum technologically feasible energy efficiency levels for 1986 are shown in Table 4.5–3.

Test Procedures

The test procedures for room air conditioners found at 10 CFR Part 430, Subpart B, provide a standard method for testing to determine the energy efficiency ratio (EER) of room air conditioners by measuring the cooling capacity and electrical energy consumed by a room air conditioner at standard operating conditions. DOE has received comments regarding the inability of the present test procedures to measure the effect on performance of design options which affect the unit as the compressor cycles on and off (automatic fan). The National Bureau of Standards is evaluating the automatic fan mode of operation of room air conditioners to determine its contribution to cyclic performance. Amendments to the test procedure will be proposed if it is determined that the automatic fan mode of operation contributes to increasing the efficiency of room air conditions. Also, DOE has proposed amending the general provisions of the Department's energy conservation program for consumer products (45 FR 2632), January 11, 1980, to clarify room air conditioner test procedures as applied to package terminal air conditioners (PTAC's). Any air conditioning product which a manufacturer identifies as a PTAC but which does not fall within DOE's definition is nevertheless covered by energy efficiency standards and is included in without outdoor side louvers room air conditions or reverse cycle room air conditioners.

Table 4.5–3. Maximum Technologically Feasible Levels for Room Air Conditioners (Energy Efficiency Ratio, EER, Btu/Watt-hr).

Product class	Level
1. With outdoor side louvers; capacity of 6000 Btu/hr or less	10.8
2. With outdoor side louvers; capacity greater than 6000 Btu/hr but no more than 20,000 Btu/hr	12.1
3. With outdoor side louvers; capacity greater than 20,000 Btu/hr	9.8
4. Without outdoor side louvers or reverse cycle	11.0

One comment suggested that ASHRAE Standard 37–69, "Methods of Testing for Rating Unitary Air Conditioning and Heat Pump Equipment," be included in the DOE test procedure for room air conditioners as an alternate test procedure for PTAC's. By rule, DOE is proposing to exclude PTAC's from the consumer products' efficiency program and therefore no alternate test procedure is necessary.

Individual Product Class Analysis

Seven comments suggested that the classes of room air conditioners identified in the advance notice be further classified on the basis of capacity because improvements in efficiency are limited by cabinet dimensions and component configurations. Also, some comments requested that portable room air conditioners be considered a separate class and the voltage is a feature which has utility and an impact on performance.

Four classes of room air conditioners are specified in section 4.5.1 of this notice. These classes are distinguished either by configuration, design or capacity of the unit. Room air conditioners are segregated according to: (1) configuration, whether or not they have outdoor side louvers; (2) design, whether or not they are reverse cycle; and (3) capacity.

DOE considered further segregating room air conditioners on the basis of voltage; however, as discussed in the "Engineering Analysis Document," TSD No. 5, DOE has determined that, while voltage is a feature that provides utility, it does not affect efficiency. DOE also considered segregation of room air conditioners based upon portability. However, research done by NBS indicates that the weight of approximately 34 pounds is the limit for portability and the maximum size is a cube with dimensions of 15 inches on each side. Based upon these criteria, DOE is not aware of any portable air conditioners on the market. Thus, DOE has not established a class for portable room air conditioners.

Room air conditioners with outdoor side louvers were segregated because the outdoor side louvers increase air flow over the condenser coils and reduce recirculation of cooled air; therefore, higher efficiency levels are possible on units as compared to those without outdoor side louvers. The units were further segregated according to capacity, which affects efficiency. Improvements in efficiency for units larger than 20,000 Btu/hr are limited due to restraints on cabinet size (maximum window opening) which impacts product design. Improvements in efficiency for units 6,000 Btu/hr or less are limited because of the relatively greater costs associated with incremental improvements in efficiency for products of this size. This is discussed in detail in the "Engineering Analysis Document," TSD No. 5. Units which are greater than 6,000 Btu/hr and less than 20,000 Btu/hr have the potential for the greatest improvements in efficiency at the least cost.

Without outdoor side louvers room air conditioners and reverse cycle room air conditioners are separate categories because of features which affect efficiency. Room air conditioners without outdoor side louvers offer the consumer the option of mounting the unit flush with the outside wall. However, this configuration decreases product efficiency because the flow of air over the condenser coil is reduced and cooled air is recirculated, further decreasing the efficiency of the unit. Reverse cycle room air conditioners offer the utility of being able to provide air heating by reversing refrigerant flow.

The efficiency of a reverse cycle room air conditioner is decreased because of losses in efficiency associated with the reversing valve. While these units have different utility, they have been included in the same class because improvements in efficiency for the two are approximately equal.

4.5.3 Economic Impacts of the Proposed Standards for Room Air Conditioners. Economic benefits and burdens resulting from the proposed standards were assessed from consumer, manufacturer and national perspectives as described in section 5 of this notice. Four alternative levels of standards were evaluated for each perspective. From this evaluation, the levels proposed in this notice were selected. Impacts resulting from these levels are presented herein. A more detailed presentation on impacts resulting from the levels which were not selected is provided in the "Economic Analysis Document," TSD No. 4.

Consumers

For each class of room air conditioners, the average consumer will realize a lower life cycle cost (a decrease in the discounted total cost of product ownership and use) for higher efficiency regulated products as compared with unregulated products. The reduction in life cycle costs ranges from $33 for room air conditioners with outdoor side louvers; capacity greater than 6000 Btu/hr but no more than 20,000 Btu/hr, to $112 for room air conditioners with outdoor side louvers; capacity greater than 20,000 Btu/hr, corresponding to a 5 percent reduction and 6.8 percent reduction in life cycle costs, respectively.

Consumer payback period, the period of time elapsed before the higher purchase price of more energy efficient products is recouped through reduced energy costs, ranges from 1.5 years for those with outdoor side louvers, capacity less than 6000 Btu/hr to 4.6 years for those with outdoor side louvers, capacity greater than 6000 Btu/hr but less than 20,000 Btu/hr.

Manufacturers

Impacts on room air conditioner manufacturers resulting from standards at the proposed level were estimated. These effects are presented as the percentage of firms expected to be able to obtain sufficient funds through profit or short-term debt, during the 1981 through 1985 period, to make the capital investment necessary for January 1986 standards. Those firms not able to successfully finance compliance with standards by means of funds from earnings or loans may be able to use other methods such as sales of stocks or bonds, transfer of funds from other operating divisions, etc. Therefore, firms having low probabilities of success will not necessarily fail to meet the standards.

At the proposed level of standards, room air conditioner manufacturers estimated to be able to obtain sufficient funds during the 1981 through 1985 period to make the capital investment necessary for January 1986 standards represent approximately 93 percent of current industry production. Included in those firms expected to be able to make the required capital investment are 96 percent of large manufacturers and 72 percent of medium-sized manufacturers. These estimates were developed using analytic techniques which examine the worst case impacts by using conservative assumptions about demand growth, market share and financing. Details of the analysis are provided in the "Economic Analysis Document," TSD No. 4.

Nation

Burdens and benefits from the national perspective encompass the impacts on consumers and manufacturers. In addition, the national perspective addresses those impacts which affect the collective national welfare. The most direct national impacts resulting from the proposed standards are: estimated energy savings; the discounted dollar value of those energy savings; the aggregate discounted consumer costs of more energy efficient products; and the net present value of the above costs and benefits.

Proposed standards on all classes of room air conditioners combined are estimated to save between 0.22 QBtu's and 0.56 QBtu's during the 1982 through 2005 period, valued between $0.4 billion and $0.7 billion in 1978 dollars. The aggregate increased cost of more energy efficient room air conditioners during that same 1982 through 2005 period is between $0.2 billion and $0.3 billion in 1978 dollars. The national net present value of the proposed regulation on room air conditioners is estimated at between $0.2 billion and $0.4 billion in 1978 dollars. These values are derived from use of the Residential Energy Use Forecasting Model described in section 5.3 of this notice and the "Economic Analysis Document," TSD No. 4.

4.6 Home Heating Equipment Not Including Furnaces

4.6.1 Summary. "Home heating equipment, not including furnaces" means vented home heating equipment and unvented home heating equipment.

"Unvented home heating equipment" means a class of home heating equipment not including furnaces used for the purpose of furnishing heat to a space proximate to such heater directly from the heater and without duct connections and includes electric heaters and unvented gas heaters.

"Vented home heating equipment" means a class of home heating equipment not including furnaces designed to furnish warmed air to the living space of a residence, directly from the device without duct connections and includes: vented wall furnace, vented floor furnace, or vented room heater.

DOE anticipates that a test procedure amendment for home heating equipment not including furnaces to incorporate several technical changes and to include a thermal stack damper analysis will be issued later in 1980. Because the installation of a thermal stack damper for home heating equipment is considered an available major design option for the improvement in energy efficiency of home heating equipment, DOE has determined that the test procedures for home heating equipment should be amended to include the measurement of the effect of energy efficiency of thermal stack dampers before the development of the efficiency standard can be adequately calculated. Today's notice therefore assigns "space reserved" to this product type.

4.7 Kitchen Ranges and Ovens

4.7.1 Summary. "Kitchen ranges and ovens" mean consumer products that are used as the major household cooking appliances. They are designed to cook or heat different types of food by one or more of the following sources of heat: gas, electricity, or microwave energy. Each product may consist of a horizontal cooking top containing one or more surface units and/or one or more heating compartments.

The proposed energy efficiency levels for kitchen ranges and ovens are found in Table 4.7-1. Table 4.7-2 presents the alternate efficiency levels selected for analysis for 1981 and 1986. The levels selected for analysis for 1981 are derived from the 1978 shipment weighted energy factor (SWEF)—which is the summation of number of units of a particular basic model multiplied by the energy factor, divided by the total number of shipments within a class—for each class of kitchen ranges and ovens. Level 2 in 1981 corresponds to the SWEF in 1978. Level 1 is one standard deviation below the SWEF, while Level 3 and Level 4 are 1 and 2 standard deviations above the SWEF, respectively. The levels selected for analysis for 1986 are derived from a

manufacturing cost estimating technique used to estimate materials, investment and engineering costs required to market products of higher efficiencies in the 1986 time frame. Level 3 in 1986 corresponds to the maximum level which is technologically feasible and economically justified. A detailed explanation on the technological feasibility and economic justification can be found in the Engineering Analysis and Economic Analysis Documents, TSD No. 4 and No. 5, respectively. Levels 1 and 2 correspond to proportionally lower levels which have fewer design improvements required and correspond to lower first cost and generally higher life cycle costs. Level 4 corresponds to an advanced technology case which incorporates design options not on the market place in any great quantity or only in prototype stages at this time.

Table 4.7–1 Energy Efficiency Levels For Kitchen Ranges and Ovens (Energy Factor, EF, %).

Product class	July 15, 1981	January 1, 1986
1. Microwave oven	No standard.	No standard.
2. Electric cooking top	No standard.	No standard.
3. Electric oven	17.6–1.57V	20.2–1.57V
4. Electric oven, self-cleaning	17.6–1.57V	18.3–1.57V
5. Gas cooking top	31	45
6. Gas oven	6.4–0.73V	9.2–0.73V
7. Gas oven, self-cleaning	7.2–0.73V	8.6–0.73V

V=Total oven volume, expressed in ft³.

Note.—See rationale for variable standards in section 4.7.2.

Table 4.7-2.—*Alternative Efficiency Levels (Energy Factor, EF Percent)*

Product class	Level	1	2	3	4
1. Microwave oven	1981	30	36	43	50
	1986			44	
2. Electric cooking top	1981	72	75	79	83
	1986			79	
3. Electric oven	1981	16.4–1.57V	17.6–1.57V	18.8–1.57V	20.0–1.57V
	1986	18.1–1.57V	19.7–1.57V	20.2–1.57V	
4. Electric oven, self cleaning	1981	16.3–1.57V	17.6–1.57V	18.8–1.57V	20.8–1.57V
	1986	16.3–1.57V	18.1–1.57V	18.3–1.57V	
5. Gas cooking top	1981	24	31	37	44
	1986		42	45	
6. Gas oven	1981	5.0–0.73V	6.4–0.73V	7.8–0.73V	9.2–0.73V
	1986	6.6–0.73V	6.8–0.73V	9.2–0.73V	
7. Gas oven, self cleaning	1981	6.5–0.73V	7.2–0.73V	7.9–0.73V	8.6–0.73V
	1986	8.0–0.73V	8.3–0.73V	8.6–0.73V	

V=Total oven volume, expressed in ft³.

The rationale for selecting the proposed levels appears in sections 4.7.2 and 4.7.3.

No standards are proposed today for the classes of microwave ovens and electric cooking tops. DOE has determined that there are no cost effective design options for reducing the energy consumption of these classes without affecting product utility which would result in a significant conservation of energy.

4.7.2 Engineering Analysis.

Methodology

In performing the efficiency analysis, 6 different design options were applied as appropriate to improve the efficiency of kitchen ranges and ovens. These design options were:

- increased insulation by using thicker or denser fiberglass;
- improved gaskets or reduced excess air;
- intermittent ignition device to replace standing pilot;
- reduced oven mass through smaller cavities or lighter racks;
- reduced electric resistance heater contact resistance; and
- reflective pans under burners.

The analysis of the efficiency improvement which comes from the application of these design options was based on engineering analysis of experimental data and industry data from Form CS–179.

The manufacturing cost analysis assumed one large manufacturer with four major production lines and eleven small manufacturers each with one specialty production line for electric ovens and cook tops. For gas ovens and cook tops, assumptions made in the analysis were that there were three large manufacturers with three major production lines and one speciality production line, plus five small manufacturers with two specialty production lines. These production lines were distributed among standard products and speciality units such as high oven combination ranges and other consumer products.

For electric ranges and ovens, the costs associated with implementing the design options resulted from additional material for denser fiberglass and thicker insulation, and tooling for a smaller oven cavity. The costs associated with these changes, calculated on a per unit basis including an allowance for additional labor, were totaled to obtain an estimated incremental cost change for each efficiency level. The increment in sheathed electric resistance heater element efficiency for electric cooking tops was costed by assuming a higher reject rate (of lower efficiency units) and more time in quality control, resulting in an additional labor allowance per unit. For gas ranges and ovens, the costs to use an intermittent ignition device to replace the standing pilot assumed that either a spark igniter or globar for the range top and oven were purchased. Additionally, costs for retooling to manufacture a mounting bracket, tooling changes to the range top to accommodate the intermittent ignition device, and additional labor for assembly were all estimated. Costs attributed to improved insulation were the same as those for electric units. The cost efficiency relationships developed are given in the "Engineering Analysis Document," TSD No. 5.

The maximum technologically feasible energy efficiency levels for these products were based on the efficiency of units presently on the market. These units include design options such as improved insulation, better isolation of the oven liner from the outside cabinet, forced convection, and reduced vent air. The maximum technologically feasible efficiency levels for 1986 for kitchen ranges and ovens are detailed in Table 4.7–3.

Table 4.7–3 Maximum Technologically Feasible levels for Kitchen Ranges and Ovens (Energy Factor, EF, %).

Product class	Level
1. Microwave oven	44
2. Electric cooking top	79
3. Electric oven	20.2–1.57V
4. Electric oven, self-cleaning	18.4–1.57V
5. Gas cooking top	45
6. Gas oven	9.3–0.73V
7. Gas oven, self-cleaning	8.7–0.73V

V=Total oven volume, expressed in ft³.

Test Procedures

The test procedures for kitchen ranges and ovens found at 10 CFR Part 430, Subpart B, provide a standardized method for determining the efficiency (energy factor, in percent) for kitchen ranges and ovens by measuring annual useful cooking energy output and the total energy input at standard conditions for conventional cooking tops, conventional and microwave ovens.

DOE anticipates that it will amend the test procedures within the next 12 months to add the following products which presently represent only a small fraction of the market: (1) cooking tops which utilize induction surface heating elements; (2) single compartment ovens which are capable of heating food by means of electric resistance heaters and microwave energy; (3) a microwave oven in combination with a conventional oven; and (4) a microwave oven in combination with a conventional cooking top. Revision of the test procedures is not expected to affect previous testing results or to affect the minimum energy efficiency levels proposed by this notice. The energy factor is a useful indicator of the efficiency of conventional cooking tops, conventional ovens and microwave ovens because it accounts for differences in energy consumption corresponding to typical consumer usage. For multiple conventional ovens, it is intended that the energy factor for each conventional oven be determined using the test procedures cited in section 4.1.4.1 of Appendix I of Subpart B. Cooking efficiency, the ratio of the cooking energy output during a laboratory test to the cooking energy input for the same test, another measure of energy consumption in the test procedures, has not been chosen as the measure of energy consumption because by failing to include the annual energy consumption of pilot lights, clocks and self-cleaning, it does not represent typical consumer energy consumption as well as the energy factor.

Several comments received in response to the advance notice suggested that the standards should take into account the following issues: (1) the energy used by browning elements in microwave ovens, (2) the energy factor varies with capacity for conventional gas and electric ovens, and (3) thermostatically controlled burners reduce the energy consumed by conventional gas cooking tops. DOE believes that the choice of proposed classes and varying efficiency levels by volume proposed today adequately address the above comments.

Individual Product Class Analysis

Seven classes of kitchen ranges and ovens are specified in section 4.7.1 in this notice. These classes are distinguished by performance related features which affect both the unit's efficiency and utility. These features are: (1) the type of energy consumed (gas or electric), (2) the function of the unit (cooking top, conventional oven or microwave oven), and (3) the type of cleaning system. Failure to establish separate classes according to the type of energy consumer might result in the elimination of all basic models consuming a certain type of energy.

Kitchen ranges and ovens are further segregated by the different functions (microwave oven, conventional ovens or cooking tops) each of which has a distinct utility. The test procedures differ for each function to take into account the differences in cooking. Therefore, the energy factors differ for each function.

DOE has determined that ovens which do not require any manual effort by the consumer to clean provides utility to the consumer. Electric ovens and gas ovens have been segregated into classes of self-cleaning ovens and other than self-cleaning ovens. Self-cleaning ovens tend to have lower efficiencies than other ovens because of the extra energy consumed by the self-cleaning cycle. Since self-cleaning ovens offer a distinct performance-related feature which affects utility and efficiency, DOE is specifying two classes of self-cleaning ovens, one electric and one gas, in order to ensure that such units remain available to customers.

DOE is aware that the efficiency of conventional ovens decreases with increasing volume because of the increase of the volume of the oven relative to the mass of the representative test load. Thus, DOE has accounted for this relationship by proposing energy efficiency levels which decrease linearly with volume. This assures that larger units will not be penalized and that all units must achieve proportionally the same level of energy efficiency improvements. This relationship of efficiency to volume is discussed in detail in the "Engineering Analysis Document," TSD No. 5.

4.7.3 Economic Impacts of the Proposed Standards for Kitchen Ranges and Ovens. Economic benefits and burdens resulting from the proposed standards were assessed from consumer, manufacturer and national perspectives as described in section 5 of this notice. Four alternative levels of standards were evaluated for each perspective, and from this evaluation, the levels proposed in this notice were selected. Impacts resulting from these levels are presented herein. A more detailed presentation on impacts resulting from the levels which were not selected is provided in the "Economic Analysis Document," TSD No. 4.

Consumers

For each class of kitchen ranges and ovens, the average consumer will realize a lower life cycle cost (a decrease in the discounted total cost of product ownership and use) for higher efficiency regulated products as compared with unregulated products. The reduction in life cycle costs ranges from $14 for a self-cleaning gas oven to $90 for gas cooking tops, corresponding to a 3 percent reduction and 17 percent reduction in life cycle costs, respectively.

Consumer payback period, the period of time elapse before the higher purchase price of more energy-efficient products is recouped through reduced energy costs, ranges from 1.6 years for standard electric ovens to 3.4 years for self-cleaning gas ovens.

Manufacturers

Impacts on kitchen range and oven manufacturers resulting from standards at the proposed level were estimated. These effects are presented as the percentage of firms expected to be able to obtain sufficient funds through profit or short-term debt, during the 1981 through 1985 period, to make the capital investment necessary for January 1986 standards. Those firms not able to successfully finance compliance with standards by means of funds from earnings or loans may be able to use other methods such as sales of stocks or bonds, transfer of funds from other operating divisions, etc. Therefore, firms having low probabilities of success will not necessarily fail to meet the standards.

At the proposed level of standards, kitchen range and oven manufacturers estimated to be able to obtain sufficient funds during the 1981 through 1985 period to make the capital investment necessary for January 1986 standards represent approximately 94 percent of current industry production. Included in those firms expected to be able to make the required capital investment are 95 percent of large manufacturers and 94 percent of medium-sized manufacturers. These estimates were developed using analytic techniques which examine the worst case impacts by using conservative assumptions about demand growth, market share, and financing. Details of the analysis are provided in the "Economic Analysis Document," TSD No. 4.

Nation

Burdens and benefits from the national perspective encompass the impacts on consumers and manufacturers. In addition, the national perspective addresses those impacts which affect the collective national welfare. The most direct national impacts resulting from the proposed standards are: estimated energy savings; the discounted dollar value of those

energy savings; the aggregate discounted consumer costs of more energy efficient products; and the net present value of the above costs and benefits.

Proposed standards on all classes of kitchen ranges and ovens combined are estimated to save between 0.26 QBtu's and 0.82 QBtu's during the 1982 through 2005 period, valued between $0.4 billion and $1.0 billion in 1978 dollars. The aggregate increased cost of more energy efficient kitchen ranges and ovens during that same 1982 through 2005 period is between $0.1 billion and $0.3 billion in 1978 dollars. The national net present value of the proposed regulation on kitchen ranges and ovens is estimated at beween $0.3 billion and $0.7 billion in 1978 dollars. These values are derived from use of the Residential Energy Use Forecasting Model described in section 5.3 of this notice and the "Economic Analysis Document," TSD No. 4.

4.8 Central Air Conditioners

4.8.1 Summary. "Central air conditioner" means a consumer product which is powered by single phase electric current, which is rated below 65,000 Btu/hour, which is not contained within the same cabinet as a furnace with a rated capacity above 225,000 Btu/hour, and which is either a "heat pump" or a "cooling only unit."

The proposed energy efficiency levels for central air conditioners are found in Table 4.8-1. Table 4.8-2 presents the alternate efficiency levels selected for analysis for 1981 and 1986. The levels selected for analysis for 1981 are derived from the 1978 shipment weighted energy factor (SWEF)—which is the summation of number of units of a particular basis model multiplied by the energy factor, divided by the total number of shipments within a class—for each class of central air conditioners. Level 2 in 1981 corresponds to the SWEF in 1978. Level 1 is one standard deviation below the SWEF, while Level 3 and Level 4 are 1 and 2 standard deviations above the SWEF, respectively. The levels selected for analysis for 1986 are derived from a manufacturing cost estimating technique used to estimate materials, investment and engineering costs required to market products of higher efficiencies in the 1986 time frame.

Table 4.8-1 Energy Efficiency Levels for Central Air Conditioners (Seasonal Energy Efficiency Ratio, SEER, Btu/Watt-hr).

Product class	July 15, 1981	January 1, 1986
1. Split system, cooling only	7.8	11.0
2. Single package, cooling only.	7.5	10.5
3. Air source, split system, heat pump.	Space reserved.	
4. Air source, single package, heat pump.	Space reserved.	
5. Air source, split system, heating only heat pump.	Space reserved.	

Level 3 in 1986 corresponds to the maximum level which is technologically feasible and economically justified. A detailed explanation on the technological feasibility and economic justifiability can be found in the Engineering Analysis and Economic Analysis Documents, TSD No. 4 and No. 5, respectively. Levels 1 and 2 correspond to proportionally lower levels which have fewer design improvements required and correspond to lower first cost and generally higher life cycle costs. Level 4 corresponds to an advanced technology case which incorporates design options not on the market place in any great quantity or only in prototype stages at this time.

The rationale for selecting the proposed levels appears in sections 4.8.2 and 4.8.3.

Because test procedures have not been finalized for three classes of central air conditioners, space has been reserved for energy efficiency levels for those classes.

Table 4.8-2.—*Alternate Efficiency Levels (Seasonal Energy Efficiency Ratio, SEER, Btu/Watt-hr)*

Product class	Level	1	2	3	4
1. Split system, cooling only	1981	6.2	7.0	7.8	8.6
	1986	9.2	10.1	11.1	.....
2. Single package, cooling only	1981	6.3	6.9	7.5	8.1
	1986	8.5	9.6	10.7	.....
3. Air source, split system, heat pump	1981	NA	.....	.....	.....
	1986	.....	.....	.....	.....
4. Air source, single package, heat pump	1981	NA	.....	.....	.....
	1986	.....	.....	.....	.....
5. Air source, split system, heating only heat pump.	1981	NA	.....	.....	.....
	1986				.....

4.8.2 Engineering Analysis.

Methodology

Increased condenser and evaporator surface areas were the energy saving design options considered in the efficiency analysis of central air conditioners. Additional frontal area and condenser depth were considered as well as increased frontal area for the evaporator. By using available larger cabinet sizes or manufacturing a new cabinet beyond the largest 5 ton unit heat transfer was increased. These changes can also be viewed as downsizing the compressor within the existing cabinet and heat exchanger assembly. The two approaches are synonomous. The engineering analysis utilized a component computer model which explicitly treats all major system elements (a detailed discussion of this model is contained in the "Engineering Analysis Document," TSD No. 5). With each change in heat transfer area, air flow volume and compressor capacity were varied in order to maintain the system capacity at the lowest power consumption. Consideration was given to cabinet air flow resistance effects and other nonideal air flow factors. The standard energy consumption of the indoor fan specified in the test procedure for a split system was employed in the analysis. A fixed external resistance on the indoor units was applied to packaged systems. A baseline compressor with an efficiency of 8.86 was employed throughout the analysis. This represents the highest efficiency compressor for which DOE has published performance information.

The manufacturing cost analysis computer performance model predicts the pounds of copper and aluminum required for the improved heat transfer surfaces. The added material costs for a large manufacturer to purchase these materials was then calculated. It is assumed that a small manufacturer would purchase fabricated coils, paying approximately a 10 percent premium. Cost reductions in downsizing the compressor were treated as a function of the reduced capacity. Cost reductions resulted primarily from reduced motor size. The investment necessary to build a new large cabinet, beyond the existing 5 ton cabinet, was assumed to be shared by all units within the product class.

Maximum technologically feasible energy efficiency levels are likely to be achievable through the use of the more

efficient two speed or modulating compressors which varies the output of the unit to correspond to the building load of the dwelling to take advantage of the credit given for this type of system in the test procedure. Industry data was provided for the analysis of the twin compressor performance. The maximum technologically feasible efficiency levels for 1986 for central air conditioners are found in Table 4.8–3.

Table 4.8–3. Maximum Technologically Feasible Levels for Central Air Conditioners (Seasonal Energy Efficiency Ratio, SEER, Btu/Watt-hr).

Project class	Level
1. Split system, cooling only	14.0
2. Single package, cooling only	13.0
3. Air source, split system, heat pump	N/A
4. Air source, single package, heat pump	N/A
5. Air source, split system, heating only heat pump	N/A

Test Procedures

The test procedures for central air conditioners found at 10 CFR Part 430, Subpart B, provide a standard method for testing to determine the efficiency of central air conditioners by measuring the cooling and heating capacities and electric energy consumption of central air conditioners at standard test conditions. The measure of efficiency accounts for such factors as oversizing, cycling of the unit when the building load is less than the output of the unit, hours of operation at different climatic conditions, and actual operating controls of the particular unit being tested. The measure of efficiency of central air conditioners, cooling mode (seasonal energy efficiency ratio, SEER) is defined as the total cooling provided in Btu's divided by the total electrical energy consumed in Watt-hours in a normal cooling season. The measure of heating efficiency for central air conditioners in the heating mode (heating seasonal performance factor, HSPF) is defined as the total heating in Btu's, divided by the total electric energy consumed in Watt-hours in a normal heating season.

No comments specifically relating to test procedures for cooling only central air conditioners were received in response to the advance notice; however, the test procedure has been recently revised (44 FR 76700, December 17, 1979) to include testing procedures for heating and cooling performance of heat pumps. This amendment included minor changes to the testing procedures for cooling only central air conditioners; no measurable differences in SEER resulted from the revision. Thus, existing test data on SEER remains accurate and has been used to determine the energy efficiency levels for cooling only units in today's proposed rule.

Individual Product Class Analysis

In the advance notice, DOE segregated cooling only central air conditioners into two classes according to whether the unit is designed as a single package or as a split system with separate indoor and outdoor components connected by refrigeration and electrical lines. Several comments were received in response to these suggested classes. One commenter stated that since both types of cooling only central air conditioners serve the same function, they should be combined into a single class. The commenter stated that in the construction industry, split systems and single package units are competitors and are used almost interchangeably, and that split systems can be used almost in any place that package units are used. Consequently, to create two separate standards for these products because of a few isolated situations would not maximize energy savings.

DOE has reviewed this comment and has determined that single package units and split systems units should not be combined into one class. Combining the two classes would adversely impact single package units which are inherently less efficient due to space limitations and size constraints. Efficiency improvements to go to the same level of standards are not cost justified as single package units have higher associated costs than split systems units. DOE today proposes separate classes for single package and split system central air conditioners.

Another commenter stated that DOE should establish additional classes of cooling only central air conditioners based on capacity since industry data indicate that products at the lower and upper end of the capacity range tend to be less efficient. DOE and NBS have concluded that there is no fundamental technical reason which causes these decreases in product efficiency. It is possible to design high and low capacity models to have efficiencies equal to models of medium capacity, and DOE is not aware of any noticeable decrease in product utility that would result therefrom.

The commenter stated that single package cooling equipment and combination heating and cooling equipment may typically be less efficient than split system cooling only. No data were supplied by the commenter to substantiate this claim. DOE has concluded that these units are nearly always designed as single package units and that the separate class proposed for single package units is adequate to account for any possible differences in efficiency of these units.

A final comment was received from a manufacturer of a single-package air conditioning system that utilizes a high pressure and high velocity air distribution system. The commenter stated that because of his specific design, he is unable to attain cooling efficiencies as high as lower velocity cooling equipment can attain. The commenter also stated that losses in his prefabricated duct system were substantially less than those incurred by normal ductwork for low-velocity distribution systems. DOE has reviewed the comments and has determined that the commenter may have a valid argument. However, in the absence of any data or further design information, DOE cannot verify the comments. DOE has addressed this issue by amending the test procedures by granting waivers for unique designs that cannot be measured by the existing procedures (45 FR 14188, March 4, 1980).

Five classes of central air conditioners are specified in section 4.8.1 of this notice. These classes are distinguished by performance related features which affect both efficiency and utility. Central air conditioners are segregated between units which only provide cooling (cooling only units) and which may also provide heating (heat pumps). Because the test procedure for heat pumps was prescribed on December 27, 1979, the effective date for implementation is June 24, 1980; today's notice, therefore, assigns "space reserved" to all three classes of heat pumps: air source, split system heat pump; air source, single package heat pump; and air source, heating only heat pump.

Cooling only central air conditioners have been further segregated into single package and split system cooling only units. These units have specific utility based on space availability and on the physical location of the units. Architectural considerations of certain residences either do not allow or do not have outdoor space to install the outdoor unit of a split system. When this occurs, a different type of unit must either be mounted through the wall or in the attic of a house. Improvements in efficiency for single package units are limited due to size constraints (maximum wall and ceiling openings) which impact product design. These design limitations are discussed in the "Engineering Analysis Document," TSD No. 5. For these reasons DOE has determined that it is necessary to propose separate classes for split

system and single package central air conditioners.

4.8.3 Economic Impacts of the Proposed Standards for Central Air Conditioners. Economic benefits and burdens resulting from the proposed standards were assessed from consumer, manufacturer and national perspectives as described in section 5 of this notice. Four alternative levels of standards were evaluated for each perspective and from this evaluation, the levels proposed in this notice were selected. Impacts resulting from these levels are presented herein. A more detailed presentation on impacts resulting from the levels which were not selected is provided in the "Economic Analysis Document," TSD No. 4.

Consumers

For each class of central air conditioners, the average consumer will realize a lower life cycle cost (a decrease in the discounted total cost of product ownership and use) for higher efficiency regulated products as compared with unregulated products. The reduction in life cycle costs range from $303 for split system central air conditioners to $429 for single package central air conditioners corresponding to an 11 percent reduction and 15 percent reduction in life cycle costs, respectively.

Consumer payback period, the period of time elapsed before the higher purchase price of more energy-efficient products is recouped through reduced energy costs, ranges from 2.6 years for single package air conditioners to 5.7 years for split system central air conditioners.

Manufacturers

Impacts on central air conditioner manufacturers resulting from standards at the proposed level were estimated. These effects are presented as the percentage of firms expected to be able to obtain sufficient funds through profit or short-term debt, during the 1981 through 1985 period, to make the capital investment necessary for January 1986 standards. Those firms not able to successfully finance compliance with standards by means of funds from earnings or loans may be able to use other methods such as sales of stocks or bonds, transfer of funds from other operating divisions, etc. Therefore, firms having low probabilities of success will not necessarily fail to meet the standards.

At the proposed level of standards, central air conditioner manufacturers estimated to be able to obtain sufficient funds during the 1981 through 1985 period to make the capital investment necessary for January 1986 standards represent approximately 99 percent of current industry production. Included in those firms expected to be able to make the required capital investment are 99 percent of large manufacturers, 99 percent of medium-sized manufacturers, and 96 percent of small manufacturers. These estimates were developed using analytic techniques which examine the worst case impacts by using conservative assumptions about demand growth, market share and financing. Details of the analysis are provided in the "Economic Analysis Document," TSD No. 4.

Nation

Burdens and benefits from the national perspective encompass the impacts on consumers and manufacturers. In addition, the national perspective addresses those impacts which affect the collective national welfare. The most direct national impacts resulting from the proposed standards are: estimated energy savings; the discounted dollar value of those energy savings; the aggregate discounted consumer costs of more energy efficient products; and the net present value of the above costs and benefits.

Proposed standards on all classes of central air conditioners combined are estimated to save between 2.62 QBtu's and 3.73QBtu's during the 1982 through 2005 period, valued between $4.1 billion and $4.3 billion in 1978 dollars. The aggregate increased cost of more energy efficient central air conditioners during that same 1982 through 2005 period is between $3.3 billion and $3.9 billion in 1978 dollars. The national net present value of the proposed regulation on central air conditioners is estimated at between $0.4 billion and $0.8 billion in 1978 dollars. These values are derived from use of the Residential Energy Use Forecasting Model described in section 5.3 of this notice and the "Economic Analysis Document," TSD No. 4.

4.9 Furnaces

4.9.1 Summary. "Furnace" means a device, utilizing only single-phase electric current in the case of electric furnaces and boilers, single-phase electric current in conjunction with either natural gas, propane, or home heating oil in the case of gas and oil forced air furnaces and gas, and oil boilers, or only gas in the case of gravity central furnaces, which is designed to be the principal heating source for the living space of a residence and which is not contained within the same cabinet with a central air conditioner of a rated cooling capacity in excess of 65,000 Btu's per hour. A furnace is either an electric central furnace, electric boiler, forced air central furnace, gravity central furnace, or low pressure steam or hot water boiler. The heat input rate of a furnace is less than 300,000 Btu's per hour for electric boilers and low pressure steam or hot water boilers, and less than 225,000 Btu's per hour for forced air central furnaces, gravity central furnaces and electric central furnaces.

The proposed energy efficiency levels for furnaces are found in Table 4.9-1. Table 4.9-2 presents the alternate efficiency levels selected for analysis for 1981 and 1986. The levels selected for analysis for 1981 are derived from the 1978 shipment weighted energy factor (SWEF)—which is the summation of number of units of a particular basic model multiplied by the energy factor, divided by the total number of shipments within a class—for each class of furnaces. Level 2 in 1981 corresponds to the SWEF in 1978. Level 1 is one standard deviation below the SWEF, while Level 3 and Level 4 are 1 and 2 standard deviations above the SWEF, respectively. The levels selected for analysis cost estimating technique used to estimate materials, investment and engineering costs required to market products of higher efficiencies in the 1986 time frame. Level 3 in 1986 corresponds to the maximum level which is technologically feasible and economically justified. A detailed explanation on the technological feasibility and economic justifiability can be found in the Engineering Analysis and Economic Analysis Documents, TSD No. 4 and No. 5, respectively. Levels 1 and 2 correspond to proportionally lower levels which have fewer design improvements required and correspond to lower first cost and generally higher life cycle costs. Level 4 corresponds to an advanced technology case which incorporates design options not on the market place in any great quantity or only in prototype stages at this time.

Table 4.9-1 Energy Efficiency Levels For Furnaces (Annual Fuel Utilization Efficiency, AFUE, percent).

Product class	July 15, 1981	January 1, 1986
1. Electric	No standard.	No standard.
2. Gas gravity	No standard.	No standard.
3. Gas, forced air, indoor	65	81
4. Gas, forced air, outdoor nonweatherproof horizontal.	56	74
5. Gas, forced air, outdoor other than nonweatherproof.	68	76
6. Gas boiler, indoor	65	79
7. Gas boiler, outdoor	No standard.	No standard.
8. Oil, forced air, indoor	75	80
9. Oil, forced air, outdoor	71	78
10. Oil boiler, indoor	76	82
11. Oil, boiler, outdoor	No standard.	No standard.

Table 4.9-2.—*Alternate Efficiency Levels (Annual Fuel Utilization Efficiency, AFUE, Percent)*

Product class	Level	1	2	3	4
1. Electric	1981				
	1986				
2. Gas gravity	1981				
	1986				
3. Gas, forced air, indoor	1981	61	65	69	73
	1986	67	73	81	
4. Gas, forced air, outdoor, nonweatherproof horizontal.	1981	52	56	60	65
	1986	65	70	74	
5. Gas, forced air, outdoor, other than nonweatherproof.	1981	65	68	71	73
	1986	70	72	76	
6. Gas boiler, indoor	1981	62	65	68	71
	1986	67	73	79	
7. Gas boiler, outdoor	1981				
	1986				
8. Oil, forced air, indoor	1981	73	75	78	81
	1986		75	80	
9. Oil, forced air, outdoor	1981	69	71	73	76
	1986	70	73	78	
10. Oil boiler, indoor	1981	74	76	78	80
	1986	78	80	82	
11. Oil boiler, outdoor	1981	74	75	75	76
	1986				

The rationale for selecting the proposed levels appears in sections 4.9.2 and 4.9.3.

No energy efficiency standards are proposed today for the following classes of furnaces: electric; gas gravity; gas boiler, outdoor; and oil boiler, outdoor. Electric furnaces currently operate at or about 100% efficiency because all the electric energy is transferred into the conditioned space. Losses due to inefficient motors and improvements achieved by added insulation are taken into account because the test procedures assume that all standby losses are usable heat for the dwelling. Thus, DOE has determined that it is not technologically feasible to propose energy efficiency standards for this class of furnaces. For the other 3 classes there presently exist such a limited production that DOE has determined that standards are not economically justified for these classes and no significant energy conservation, as discussed in section 10.5, can be realized by imposing standards on these classes of products.

4.9.2 Engineering Analysis.

Methodology

In performing the efficiency analysis, the following design options were applied as appropriate:

- increased heat exchanger surface area;
- intermittent ignition device to replace standing pilot;
- stack damper to reduce standby losses;
- power burner or power unit; and
- retention head burner.

The analysis of the various product classes was completed using a computer model coupled with experimental data from various sources and engineering analysis. A technical discussion of the calculations used to estimate the efficiency improvements from use of these design options is contained in the "Engineering Analysis Document," TSD No. 5.

The manufacturing cost analysis assumed a certain number of large manufacturers and small manufacturers for each product class. These were:

- gas-warm air furnaces—three large manufacturers; ten small manufacturers;
- gas boilers—four large manufacturers; four small manufacturers;
- oil warm air furnaces—three large manufacturers; four small manufacturers;
- oil boilers—four manufacturers; four small manufacturers;
- gas horizontal units (nonweatherproof)—three large manufacturers; ten small manufacturers; and
- gas outdoor weatherproof units—three large manufacturers; ten small manufacturers.

The number of production lines were not estimated for furnaces as implementation of the design options required only tooling changes and these were based on the number of units which could be produced per year on a single tool.

Most design options required mounting of a purchased part, such as a stack damper, intermittent ignition device, power burner or power vent, or a retention head burner. Implementation of these designs at most a small amount of tooling for mounting brackets, additional labor for installation, and the cost of the purchased part.

Increasing the heat exchanger surface area is an example of a major design option which was costed. This could be done by derating the unit, i.e., reducing the burner input rate per unit of heat exchanger area; or the surface area could be increased by enlarging the existing heat exchanger. For gas-fired units, the heat exchanger was considered to be common to all models and the tooling costs were therefore amortized over the complete product line. Cabinet changes were also considered. For typical large and small manufacturers an estimate was made of the number of models produced in order to estimate the tooling requirements for cabinet design changes. These various costs amortized on a per unit basis were used to develop estimates of the cost efficiency relationship for each product class. These relationships are explained in the "Engineering Analysis Document," TSD No. 5.

The maximum technologically feasible energy efficiency levels for furnaces are found in Table 4.9-3. The maximum technologically achievable efficiency levels are obtained by use of a condensing mode of operation which removes latent heat from flue gases. This requires a major redesign in the final section of the heat exchangers, coupled with a forced draft burner system such as the use of a power vent, power burner, or pulsed combustion. New corrosion resistant materials will be required and a complete furnace package will have to be redesigned. The impact of this will be highly dependent on the present design and manufacturing procedures for individual manufacturers, but in all cases it will require substantial investment in capital equipment and tooling.

Table 4.9.3. Maximum Technologically Feasible Levels for Furnaces (Annual Fuel Utilization Efficiency, AFUE, percent).

Product class	Level
1. Electric	N/A
2. Gas gravity	N/A
3. Gas, forced air, indoor	94
4. Gas, forced air, outdoor, nonweatherproof horizontal	92
5. Gas, forced air, outdoor, other than nonweatherproof	92
6. Gas boiler, indoor	96
7. Gas boiler, outdoor	N/A
8. Oil, forced air, indoor	94

Product class	Level
9. Oil, forced air, outdoor	92
10. Oil boiler, indoor	96
11. Oil boiler, outdoor	N/A

Test Procedures

The test procedures for furnaces found at 10 CFR Part 430, Subpart B, provide a standardized method to determine the efficiency (annual fuel utilization efficiency, (AFUE) of furnaces by measuring the characteristic losses of the furnace.

Comments expressed concern that the standards might be set at a level which would affect the reliability and safety of furnaces. DOE has analyzed only design options that can be incorporated into the product without reducing its reliability or safety.

Comments were received which suggested that the furnace test procedures should be amended in order to adequately account for electrical energy consumed by gas and oil furnaces. DOE furnace test procedures do account for the electrical energy consumed by fossil-fueled furnaces in the calculations required for determining the annual operating cost. However, the measure of efficiency in the existing test procedure does not account for the efficiency performance of electrical components. DOE has sought to develop a new efficiency measure which will reflect differences in electrical energy consumption. Accordingly, DOE has proposed such an efficiency measure in an amendment to the furnace test procedure published in the Federal Register of January 4, 1980 (45 FR 1298).

One comment expressed concern that the present DOE furnace test procedures provide a credit for dampers on indoor furnaces but do not provide the same credit for dampers on outdoor furnaces. The primary savings for dampers is the reduction in infiltration losses. Because of the use of outdoor air in the combusition process, these losses are assigned a zero value in the test procedures for units installed outdoors. Therefore, the overall evaluation of indoor and outdoor units is correct as prescribed in the final furnace test procedures.

DOE has learned that some manufacturers, through testing experience, have questioned the test procedures which they feel should be expanded or changed. A number of cases in point have been the subject of applications for exception to DOE's Office of Hearings and Appeals (OHA). On the basis of information submitted by applications to OHA, comments submitted by manufacturers and other available information, DOE issued an advance notice on May 29, 1979 (44 FR 30978), to amend the furnace test procedures to include procedures for testing two new furnace designs—pulse combustion furnaces and condensing furnaces—and to incorporate the provisions of the Exceptions granted by OHA.

In the proposed amendments to the furnace test procedures, DOE is proposing procedures for testing pulse combustion and condensing furnaces which DOE has included in its analysis of maximum technologically feasible level of efficiency for furnaces. The remaining issues discussed in the proposed amendments are minor technical improvements, and the values of AFUE derived from the proposed amendment will be consistent with prior test results.

Individual Product Class Analysis

Four comments recommended that the classes for furnaces recognize the configuration and location of the unit (up flow, down flow, forced air, boiler and furnace), while two comments urged that furnaces and boilers should not be segregated into separate classes. Three comments suggested that classes be set for indoor and outdoor applications.

Eleven classes of furnaces are specified in section 4.9.1 of this notice. These classes are distinguished either by the type of fuel consumed or by performance-related features which affect utility and efficiency.

One performance-related feature affecting utility is the method of heat distribution to the household. Gas furnaces use air circulation systems based either on the effect of gravity on low density hearted air or on the action of a blower (i.e., forced air). Gravity type systems offer the utility of operating without an electrical connection. In addition, another category of furnaces, gas boilers, uses hot water or steam to distribute heat. These various heat distribution systems result in different characteristics of heat transfer from the furnace combustion chamber to the conditioned space and different losses through the flue. Because of the above factors, the measures of efficiency of gravity gas furnaces tend to be lower than the measure of efficiency of forced air gas furnaces. Also, the measure of efficiency of gas forced air furnaces tend to be lower than the measure of efficiency for gas boilers. Identical arguments lead to separate classes for forced air oil furnaces and oil boilers. A class of oil furnaces using gravity to circulate hot air is not specified because DOE is not aware of any such units distributed in commerce.

Another distinct utility which affects efficiency is whether the basic model is installed indoors or outdoors. In the test procedures, outdoor installed units have their jacket heat losses evaluated and these losses are deducted from the efficiency rating. This efficiency deduction is justified by the architectural utility that may be afforded a consumer by outdoor models. The efficiency of direct vent units is evaluated in the test procedures on a similar basis as outdoor units. The test data are corrected for the use of outdoor air for combustion and infiltration losses are not deducted when evaluating indoor direct vent and outdoor models. However, the difference in efficiency between direct vent units compared to other similar indoor units is negligible because the effects of heating outdoor air for combustion and low infiltration losses are offsetting.

Another utility feature which affects efficiency is the horizontal configuration of some models of outdoor forced air gas furnaces. This horizontal configuration results in less efficient heat transfer than other configurations but has the utility of being uniquely adaptable to attics and crawl spaces. Therefore, separate classes of gas horizontal furnaces are proposed to prevent the possible elimination of this type of configuration from the market. Also, it was determined that horizontal units with weatherproof cabinets have fewer dimensional constraints than nonweatherproof horizontal units which are typically installed in attics or crawl spaces. However, no significant difference in efficiency is evident for weatherproof horizontal basic models when compared to any other outdoor model. DOE has determined that there exists no utility associated with horizontal units when installed indoors. Therefore, since an attic or crawl space is considered an outdoor installation in the DOE test procedures because it is not in the conditioned space, only outdoor nonweatherproof horizontal furnaces are identified as those having justifiable reduced performance.

4.9.3 Economic Impacts of the Proposed Standards for Furnaces. Economic benefits and burdens resulting from the proposed standards were assessed from consumer, manufacturer and national perspectives as described in section 5 of this notice. Four alternative levels of standards were evaluated for each perspective, from this evaluation, the levels proposed in this notice were selected. Impacts resulting from these levels are presented herein.

A more detailed presentation on impacts resulting from the levels which were not selected is provided in the "Economic Analysis Document," TSD No. 4.

Consumers

For each class of furnaces, the average consumer will realize a lower life cycle cost (a decrease in the discounted total cost of product ownership and use) for higher efficiency regulated products as compared with unregulated products. The reduction in life cycle costs range from $62 for oil, forced air, to $624 for gas, indoor boilers, corresponding to a .5 percent reduction and 9 percent reduction in life cycle costs, respectively.

Consumer payback period, the period of time elapsed before the higher purchase price of more energy-efficient products is recouped through reduced energy costs, ranges from 0.25 years for oil, forced air, indoor furnaces to 2.7 years for gas, forced air, indoor furnaces.

Manufacturers

Impacts on furnace manufacturers resulting from standards at the proposed level were estimated. These effects are presented as the percentage of firms expected to be able to obtain sufficient funds through profit or short-term debt, during the 1981 through 1985 period, to make the capital investment necessary for January 1986 standards. Those firms not able to successfully finance compliance with standards by means of funds from earnings or loans may be able to use other methods such as sales of stocks or bonds, transfer of funds from other operating divisions, etc. Therefore, firms having low probablilities of success will not necessarily fail to meet the standards.

At the proposed level of standards, furnace manufacturers estimated to be able to obtain sufficient funds during the 1981 through 1985 period to make the capital investment necessary for January 1986 standards represent approximately 99 percent of current industry production. Included in those firms expected to be able to make the required capital investment are 99 percent of large manufacturers, 98 percent of medium-sized manufacturers, and 95 percent of small manufacturers are expected to be able to make the required capital investment. These estimates were developed using analytic techniques which examine the worst case impacts by using conservative assumptions about demand growth, market share and financing. Details of the analysis are provided in the "Economic Analysis Document," TSD No. 4.

Nation

Burdens and benefits from the national perspective encompass the impacts on consumers and manufacturers. In addition, the national perspective addresses those impacts which affect the collective national welfare. The most direct national impacts resulting from the proposed standards are: estimated energy savings; the discounted dollar value of those energy savings; the aggregate discounted consumer costs of more energy efficient products; and the net present value of the above costs and benefits.

Proposed standards on all classes of furnaces combined are estimated to save between 2.0 QBtu's and 4.27 QBtu's during the 1982 through 2005 period, valued between $3.5 billion and $5.1 billion in 1978 dollars. The aggregate increased cost of more energy efficient furnaces during that same 1982 through 2005 period is between $1.0 billion and $1.7 billion in 1978 dollars. The national net present value of the proposed regulation on furnaces is estimated at between $2.5 billion and $3.4 billion in 1978 dollars. These values are derived from use of the Residential Energy Use Forecasting Model described in section 5.3 of this notice and the "Economic Analysis Document," TSD No. 4.

5. Economic Impact Analysis

5.1 Introduction

A regulation prescribing energy efficiency standards for consumer products will result in impacts on both consumers and manufacturers of these products. Consumers will experience the following impacts: (1) higher purchase price; and (2) lower energy cost of operation. Some manufacturers will experience: (1) retooling and equipment costs; (2) changes in sales volume; and (3) changes in sales revenue.

In addition, there will be national impacts. These impacts include: (1) changes in gross national product; (2) changes in energy consumption; and (3) changes in income distribution and employment. The standard levels selected represent tradeoffs that were made among impacts in order to realize the largest energy savings coupled with the least disturbance of any particular sector of the economy.

5.1.1 Impact Estimates for Proposed Standard Levels. Evaluation of the many alternative levels of standards for each class of consumer product resulted in the selection of preferred alternatives. These alternatives have been shown to be technologically feasible and economically justified by the impact analyses which are presented in the "Economic Analysis Document," TSD No. 4. Summaries of specific product impacts of the proposed standard levels for consumers, manufacturers and the Nation can be found in section 4 of this notice.

For all products combined, the proposed standards are estimated to save between 13.64 QBtu's and 24.87 QBtu's during the 1982 through 2005 period, valued between $22.4 billion and $29.4 billion in discounted 1978 dollars. The aggregate increased cost of more energy efficient products during that same period will be between $7.3 billion and $10.2 billion in discounted 1978 dollars. The national net present value of proposed standards on all product types combined is estimated to be between $15.1 billion and $19.2 billion in 1978 dollars.

For the remaining national impact indicators such as change in gross national product, inflation, balance of trade, inflation and employment, there is negligible impact. In addition, the differential impacts across consumer income groups are negligible. A detailed analysis of these impacts is presented in the "Economic Analysis Document," TSD No. 4.

5.1.2 Purpose, Scope and Methodology. The purpose of the economic analysis was to determine whether or not a standard was economically justified and if the benefits of the standard exceed the burdens. This analysis was based upon the seven factors in section 325(d) of the Act and listed in section 1.2.2 of this notice.

The application of these legislative criteria required that the impacts on consumers, manufacturers and the Nation be quantified. The analysis separately addressed impacts from all three perspectives and then integrated the results. Economic efficiency tests, which evaluate the magnitude of impacts resulting from energy efficiency standards regulations, were applied from the perspective of consumers, manufacturers and the Nation as a whole. Equity tests, which assess how these impacts are shared across consumer groups, different sized manufacturers and geographical regions, were also applied.

Each alternative energy efficiency level of a standard was assessed to determine the magnitude of any of the following impacts:

- changes in life cycle cost (LCC) to the consumer; [1]

[1] Life cycle cost is a measure of the total cost of consumer product ownership represented by the summation of product purchase cost, and maintenance and operating expenses over service life of the product, discounted to their present values.

• the distribution of costs and benefits among consumer groups;
• the distribution of costs and benefits between regions;
• loss of economic efficiency by manufacturers;
• the distribution of economic efficiency effects among manufacturer groups, especially those with less than $8 million in sales; and
• exposure of any particular group of manufacturers, especially those with sales under $8 million annually, to greater risk of financial failure.

Alternative energy efficiency levels were ranked in accordance with each of the impact measures above, including national energy savings and national net present value.

5.1.3 Relationship of Analysis to Legislative Criteria. The seven legislative criteria identified were quantitatively applied in the economic analysis as follows:

(1) Economic Impact on Consumers and Manufacturers. The economic impacts of standards on consumers were quantified by calculating consumer payback, consumer life cycle costs and the dispersion of these life cycle costs across income groups. Standards that potentially imposed a greater life cycle cost than currently exists were dropped from consideration. Additionally, any standard that could produce an inequitable burden on lower income groups was given special attention. The economic efficiency impacts of the standards on manufacturers were assessed through estimation of changes in the ratio of profit to net worth. Equity impacts on manufacturers were measured by analyzing shifts in the distribution of profit/net worth for manufacturers of varying sizes and any changes in the likelihood of firm failure. In addition, the ability of individual manufacturers to generate sufficient funds to make capital investment for 1986 standards was assessed.

(2) Cost Savings. Changes in national net present value and consumer life cycle costs were calculated. Any standard that did not lead to aggregate cost savings was eliminated from further consideration.

(3) Energy Savings. Baseline projections of energy use were compared to calculations of energy use under energy efficiency standards. Any standard that did not produce a net energy savings compared with the baseline was eliminated from further consideration.

(4) Utility or Performance. Consideration was given to various performance and utility features in making product class selections. The analysis addressed only those standards which ensured the existence of products having essential consumer utility characteristics, as determined by DOE.

(5) Lessening of Competition. Impacts on competition were measured by calculating any change in the likelihood of firm failure resulting from the imposition of a standard. If the likelihood of failure was great, the standard was eliminated from further consideration.

(6) Need of the Nation to Conserve Energy. Consideration of the Nation's need to conserve energy was incorporated in the economic methodology by ranking alternative standard levels by their national energy savings.

(7) Any Other Factors the Secretary of DOE Considers Relevant. The analysis addressing the above six criteria was expanded upon by estimating any resulting changes in income distribution, the distribution of life cycle costs across regions, gross national product, inflation, balance of trade and employment.

5.2 Value Model Overview

The Value Model is a computer program developed to evaluate alternative standard levels in accordance with regulatory guidelines and requirements in the Act. It was developed so that the economic impacts of regulation could be systematically compared, evaluated and sequentially ranked. It is organized by group perspective (consumer, manufacturer and Nation) and type of impact (economic efficiency, equity).

Impact measures incorporated within the model include:

Consumer

• Consumer life cycle costs
• Consumer payback
• Consumer income inequality coefficient

Manufacturer

• Average manufacturer profit to net worth ratio
• Interquartile shifts in manufacturer profit to net worth ratios
• Availability of funds during the 1981 to 1985 period required to make capital investments for 1986 standards.

Nation

• Macro economic variables such as gross national product, balance of trade, inflation, and employment
• Regional life cycle cost changes
• National energy savings
• National net present value.

The Value Model was run in two phases. In the first phase the effect of standards on the various impact measures was calculated. In the second phase, the acceptability of these impacts was evaluated. Its output included a list of acceptable options prioritized by energy savings and impacts on consumers, manufacturers and the Nation. For a more detailed discussion of this analysis, the reader is referred to the "Economic Analysis Document," TSD No. 4.

5.2.1 Consumer Perspective. The consumer impacts of alternative energy efficiency levels were calculated by estimating both the level of induced costs and benefits and their distribution across different income groups and regions.

Identification of Decision Making Criteria

Consumer impacts were measured by the net benefits to consumers who purchase and operate energy efficient consumer products. Benefit for this analysis was defined as the savings in life cycle costs accruing to consumer product owners. Decision making criteria for consumer impacts included: the average LCC savings resulting from energy efficiency improvements in consumer products; the specific impacts of these savings on different consumer groups; the payback period for recouping the increased purchase cost of more efficient products; and changes in disposable consumer income.

5.2.2 Manufacturer Perspective. The Value Model incorporated the potential effects of consumer product efficiency regulations on the financial posture of manufacturers. In developing the impact indicators, consideration was given to: assets, liabilities, market share, profitability, and gross sales.

Identification of Decision Making Criteria

The impact of regulation on manufacturers was reflected in changes to costs and revenues. These impacts resulted from changes in capital costs, material costs, borrowing costs, sales volumes and sales prices. The measure representing manufacturer economic efficiency impacts was percent change in the profit to net worth ratio. This ratio incorporated the entire spectrum of financial calculations including various cost items, as well as capital acquisition and debt effects.

Manufacturer equity was considered in two ways: first, as a measure of how economic efficiency impacts are shared among manufacturers; and second, as a measure of the change in exposure to failure resulting from regulation-linked changes in a firm's financial position. In both measures, the industry was segmented into small, medium, and large

firms, with a comparison made to determine whether an unfair distribution of burdens could exist between different groups. Furthermore, assessment was made of the percentage of firms unable to obtain sufficient funds through profit or short-term debt, during the 1981 through 1985 period, to make the capital investment necessary for January 1986 standards.

5.2.3 Nation's Perspective. National impacts of consumer product efficiency standards encompass all consumer and manufacturer impacts. In addition, the national perspective considers those factors which affect the future well being of society in the United States as a whole (i.e., inflation, gross national product, balance of trade, etc.).

Identification of Decision Making Criteria

The impacts of standards flow through the economy to effect such national indicators as gross national product, inflation, balance of trade and employment. The Value Model assesses these impacts and displays their magnitudes. In addition the Value Model estimates the total energy savings and the national net present value resulting from alternative levels of standards. (A detailed presentation of this analysis can be found in the "Economic Analysis Document," TSD No. 4.) These latter two indicators serve as the criteria by which otherwise acceptable alternatives were sequentially ranked. The net present value is calculated as the discounted value of energy savings minus the discounted total cost of increased product prices and Federal costs. The energy savings indicator measures the total amount of energy savings attributable to consumer product energy efficiency improvements.

5.3 Economic Sub-Models Within The Value Model.

The Value Model organizes estimates of regulatory impacts into a framework for sequentially ranking alternative energy efficiency levels. The estimates of various impact measures are provided by the various sub-models described below.

The Residential Energy Use Forecasting Model calculates total energy use, by product type and fuel type, over the period 1982–2005. Estimates of energy use with and without standards are compared to assess the energy savings attributable to alternative energy efficiency standards. The model incorporates technological and behavioral effects in predicting future energy demand.

EXPLOR, a national econometric/input-output model, was used to estimate the effects of alternative standards on employment, inflation, gross national product and balance of trade. To estimate the impacts of regulation, certain input data were fed into the model. The key data were: direct energy savings (provided by the energy use model), demographic projections, discount rates and changes in costs and materials. With these inputs, the EXPLOR model calculates how economic impacts on the industrial and residential sector, directly affected by proposed standards, interact with the rest of the economy. The model traces the various regulatory impacts through the different sectors and aggregated them into summary estimates of changes in: GNP ($), inflation (%), balance of trade ($), and employment (numbers of jobs). Impacts were projected for the 1982 through 2000 period.

Impacts of consumer product efficiency standards on manufacturers of consumer products were estimated using two principal models: (1) the Dispersion Model, which analyzes how many product models, shipments, and revenues are lost at each level of regulation, and (2) the Financial Model, which analyzes the financial and business impact on manufacturers. Both models are fully described in the "Economic Analysis Document," TSD No. 4. For each alternative standard level, the revenue loss resulting from the loss of noncompliant product lines was derived using the Dispersion Model. The resulting loss of revenue is used as input to the Financial Model. That model analyzes the percentage of manufacturers usable to maintain financial health without resorting to untenable levels of debt, change of ownership or closure.

Life cycle costs and payback were analyzed by varying energy prices, discount rates, product usage rates, efficiency factors, and capital costs to determine through sensitivity analysis the relative impacts on the consumer.

Life cycle costs and payback were analyzed by varying energy prices, discount rates, efficiency factors, and capital costs to determine through sensitivity analysis the relative impacts on the consumer.

5.4 Economic Impacts of Regulation.

5.4.1 Selection of Alternative Levels for Analysis. DOE is proposing time-phased standards for each product class. A preliminary standard level is being proposed for implementation in July 1981, and a final standard level is proposed that will take effect on January 1, 1986.

In the determination of 1981 standards, four trial levels of analysis were defined for each product class. For each such class a sales weighted efficiency factor for 1978 was determined from industry survey data. This SWEF defined the second level for analysis of each class. The first level of analysis was determined by subtracting the 1978 standard deviation of the efficiency factor from the SWEF. Levels three and four were determined respectively by adding one and two standard deviations to the SWEF. The sales weighted efficiency factor (SWEF) was defined as follows:

$$SWEF = \frac{\sum_{i=1}^{N} (SM_i)(EF_i)}{\sum_{i=1}^{N} SM_i}$$

where N = number of appliance models
i = i^{th} model
SM_i = shipments of the ith model
EF_i = energy factor of the ith model.

Standard deviation (SD) was calculated as follows:

$$SD = \left[\frac{\sum_{i=1}^{N} SM_i (SWEF - EF_i)^2}{\sum_{i=1}^{N} SM_i} \right]^{1/2}$$

The four trial levels utilized in the analysis of alternative 1986 product class standards were derived as follows:

- level four was based on implementation of advanced energy efficiency technologies (equipment designs not widely available in commerce)
- level three was near the maximum product class efficiency factor considered to be attainable through conventional technologies (equipment designs widely available in commerce)
- levels two and one were derived by scaling down level three. This scaling down represented DOE's judgment regarding alternative burdens on manufacturers and was taken to provide a lower bound for choosing the preferred alternative.

5.5 Acceptability Criteria Used for Standards Selection.

The Value Model provides a display of equity and economic efficiency

impacts, as discussed above. As estimates of these impacts were viewed as a whole, a range of suitable trade-offs emerged. These trade-offs provide the criteria by which certain alternative energy efficiency levels were classified as unacceptable. A complete description of these acceptability criteria, or thresholds, can be found in the "Economic Analysis Document," TSD No. 4. To summarize some of the principal thresholds, a level of standard is acceptable only if: product life cycle costs are reduced; energy savings accrue; national net present value is positive; and the ability of the industry to effectively compete is preserved.

6.0 Certification and Enforcement

6.1. *Introduction*

Industry compliance with energy efficiency standards will be assured through a two part program approach of certification and enforcement activities. Certification is the process whereby a manufacturer by means of testing in accordance with DOE procedures, prior to commercial distribution, insures that the product complies with the energy efficiency standard. The manufacturer certifies compliance by filing a statement of compliance based on such testing with DOE. Enforcement involves all subsequent DOE activities or manufacturer requirements which insure that the continued production of a manufacturer remains in compliance with the standard.

6.1.1 *Alternative Certification and Enforcement Approach.* Four alternative approaches to consumer product certification and enforcement were developed and investigated. These included:

(a) A Minimum Government Intervention;

(b) A Strong Certification Control;

(c) A Strong Enforcement Audit;

(d) A Mixed Certification and Enforcement.

Each of the four approaches are present in a wide range of public and private standards programs. The first approach represents the lowest level of direct Federal intervention into the consumer product industry but limits DOE's control of assuring that all products distributed in commerce are in compliance with applicable energy efficiency standards. The remaining three approaches represent a larger level of effort, each placing the major program emphasis on different stages of the certification and enforcement process.

The second approach emphasizes the certification process and provides assurances of compliance before products are distributed in commerce. The third approach emphasizes the enforcement process by stressing continuing test and record audits of post-certification production. The fourth approach represents a mix between the second and third approaches, distributing the emphases between the roles of certification and enforcement audit activities.

The selection criteria used in evaluating the four certification and enforcement approaches included an assessment of anticipated impacts on and associated costs of the program (to the Federal government, industry and commerce), the likelihood of discovering noncompliant products and consequent impact on the anticipated level of compliance.

These approaches are discussed in detail in TSD No. 3, "Certification and Enforcement Analysis."

6.1.2 *Proposed Certification and Enforcement Approach.* The certification and enforcement portion of the rule being proposed today is the Mixed Certification and Enforcement Approach. This approach will yield a superior data base required to monitor the compliance behavior of manufacturers. Test costs will be spread more evenly over all of the basic models being distributed. The potential for adversely affecting new product introduction and placing smaller manufacturers at a disadvantage through delays in distribution and production will be reduced. The anticipated level of compliance (and consumer confidence) will be higher. The proposed approach is discussed in detail in sections 6.4 and 6.5.

6.2. *Statistical Analysis*

6.2.1 *Evaluation of Sampling Plans.* Test procedures have been promulgated, among other things, for determining if consumer products sold on the market are actually in compliance with the applicable standards. The test procedures could be conducted on each consumer product produced, or a sample of the total population could be selected for testing. There are several sampling plan options which could be used by DOE in the certification and enforcement efforts. Eighteen different sampling plan options were analyzed to determine if they met the following criteria:

a. Minimize manufacturers' testing costs;

b. Limit the calendar time required for testing;

c. Assure compatibility with the sampling plan promulgated for the FTC labeling program;

d. Provide a high statistically valid probability that a manufacturer preliminarily found to be in noncompliance will actually be in noncompliance; and

e. Provide a high statistically valid probability that basic models that are tested meet applicable energy efficiency standards. A summary evaluation of the eighteen options appears in Table 6-1. A more detailed discussion is contained in Appendix G of the "Certification and Enforcement Analysis;" TSD No. 3.

Table 6-1.—*Evaluation of Sampling Plan Options*

Sampling plan options	Cost of testing		Calendar time required for testing	Consistency with FTC rule
	Expected total	Distribution among manufacturers		
Option #1—All units tested divided by 0 pct defective standard.	Infeasible	Proportional to production volume	Infeasible	No.
Option #2—Fixed sample divided by 0 pct defective standard.	Highest	Equal	Shortest (d)	Option more precise (a, b).
Option #3—Integer sequential sampling with unlimited iterations divided by 0 pct defective standard.	Low	Unequal but favors efficient models.	Longest and unlimited	Option more precise (a, b).
Option #4—Integer sequential sampling; limited iterations divided by 0 pct defective standard.	Lowest	Unequal but favors efficient models.	Multiple of unit test time	Option more precise (a, b).
Option #5—Batch sequential sampling with unlimited iterations divided by 0 pct defective standard.	Moderate (c) but unlimited	Unequal but favors efficient models.	Moderate (c) but unlimited	Option more precise (a, b).
Option #6—Batch sequential sampling with limited iterations divided by 0 pct defective standard.	Moderate (c)	Unequal but favors efficient models.	Moderate (c)	Option more precise (a, b).

Table 6-1.—*Evaluation of Sampling Plan Options*—Continued

Sampling plan options	Cost of testing		Calendar time required for testing	Consistency with FTC rule
	Expected total	Distribution among manufacturers		
Option #7—All units tested divided by greater than 0 pct defective standard.	Infeasible	Proportional to production volume	Infeasible	No.
Option #8*—Fixed sample divided by greater than 0 pct defective standard.	Highest	Equal	Shortest (d)	Option more precise (a, b).
Option #9—Integer sequential sample with unlimited iterations divided by greater than 0 pct defective standard.	Low	Unequal but favors efficient models	Longest and unlimited	Option more precise (a, b).
Option #10—Integer sequential sampling with limited iterations divided by greater than 0 pct defective standard.	Lowest	Unequal but favors efficient models	Multiple of unit test time	Option more precise (a, b).
Option #11—Batch sequential sampling with unlimited iterations divided by greater than 0 pct defective standard.	Moderate (c) but unlimited	Unequal but favors efficient models	Usual	Option more precise (a, b).
Option #12*—Batch sequential sampling with limited iterations divided by greater than 0 pct defective standard.	Moderate (c)	Unequal	Moderate (c)	Option more precise (a, b).
Option #13—All units tested divided by mean energy efficiency standard.	Infeasible	Proportional to production volume	Infeasible	No.
Option #14*—Fixed sample divided by mean energy efficiency standard.	Highest	Equal	Shortest (d)	Option more precise (b).
Option #15—Integer sequential sampling with unlimited iterations divided by mean energy efficiency standard.	Low	Unequal but favors efficient models	Longest and unlimited	Option more precise (b).
Option #16—Integer sequential sampling with limited iterations divided by mean energy efficiency standardd.	Lowest	Unequal but favors efficient models	Multiple of unit test time	Option more precise (b).
Option #17—Batch sequential sampling with unlimited iterations divided by mean energy efficiency standard.	Moderate (c) but unlimited	Unequal but favors efficient models	Moderate (c) but unlimited	Option more precise (b).
Option #18*—Batch sequential sampling with limited iterations divided by mean energy efficiency standard.	Moderate (c)	Unequal but favors efficient models	Moderate (c)	Option more precise (b).

a. After transformation of EEL's to defective indicators.
b. For certain confidence limits and tolerances.
c. Depends on batch size, as well as other parameters.
d. Same as unit test time.
*Preferred options.

6.2.2 *Types of Standards.* The sampling plan options are designed for compatibility with four types of standards: (1) the mean efficiency standard, (2) the percent defective standard, (3) the combination of an energy efficiency mean and standard deviation, and (4) the combination of an energy efficiency mean and percent defective standard.

A "mean efficiency standard" seeks to maximize the average efficiency of a basic model. Such a standard establishes the minimum allowable level of average energy efficiency for a given basic model.

An "energy efficiency standard" may be established so that a basic model is allowed to have a specified percentage of sampled units which does not meet the standard. Defective units, in the case of energy efficiency standards, are defined as units with energy efficiencies below the established standard. The percentage of defective units is computed by dividing the number of defective units by the number of units tested and multiplying by 100. A "percent defective" approach requires that a specified percentage of units produced achieve energy efficiencies greater than the efficiency standard. That is, only a given proportion of units are allowed to have energy efficiencies below the efficiency standard.

To account for production variation, whereby some units may be well below or well above the standard efficiency level, a rule might also include a "standard deviation" statistic to measure the variability of energy efficiencies among units. A "combination mean and standard deviation" approach combines the mean and standard deviation measures into a single index, and the basic model index would have to exceed the standard.

Alternatively, production variation might be accounted for by combining the mean approach and the percent defective approach, so that basic models must have average energy efficiencies which meet or exceed the standard average efficiency and include less than a given production of units with efficiencies below the given percent defective allowed.

Although each approach has some advantages, the mean approach was judged superior, insofar as it controls the overall energy efficiency level for a given basic model and requires less testing than the alternate approaches. The mean approach is consistent with the energy conservation goal and the certification and enforcement testing objective. The mean approach has the further advantage of being consistent with the approach selected for the FTC energy efficiency labeling program requirements, thus reducing the testing burden of the two programs.

6.2.3 *Types of Sampling Plans.* The proposed rule includes a sequential sampling plan for determining compliance with energy efficiency standards. Various systems that could be used for selecting the number of units to be tested and the number of test sequences for determining compliance were analyzed. Three alternative systems that were studied are:

a. Test the total population of covered consumer products (which would entail 100% sampling);

b. Test a predetermined fixed number of production units; this is called a "single sampling plan;"

c. Test units within a basic model, one at a time or in groups, until a determination can be made that a basic model is in compliance or noncompliance; this is called a "sequential sampling plan."

The only way to determine conclusively (with 100% certainty) that a basic model of a covered product is in compliance with an applicable energy efficiency standard is to test every unit in the basic model. The cost and time constraints associated with this alternative make it infeasible. Although testing the total population is the only way to be 100% certain of compliance available statistical sampling methods

can be used to generate highly accurate information.

A second alternative considered was the use of a single sampling plan. In order to use the single sampling plan, sufficient numbers of units must be tested to yield results with high levels of certainty, e.g., 97.5%.

The determination of the number of units to be tested is based in part on expected unit-to-unit variability. Reliable estimates of unit to unit variability are unavailable and significant differences may exist among basic models and manufacturers. Thus, a single sample size giving sufficiently high assurance of compliance cannot be established without incurring unacceptably high testing costs for some manufacturers.

The third alternative that was considered was sequential sampling. In sequential sampling, the size of the total sample is not determined in advance. Instead, after each unit or group of units is tested, a decision is made to (1) accept, (2) reject, or (3) suspend judgment and continue sampling until a decision is ultimately reached. Sequential sampling methods often permit reaching a decision on the basis of fewer tests than single sampling plans. There are two basic types of sequential sampling schemes:

a. Integer sequential sampling, and
b. Batch sequential sampling.

Integer sequential sampling consists of making the accept, reject, or continue testing decision at the completion of each individual test. The integer sequential sampling process may be designed so that there is no maximum number of units tested to make the accept or reject decision for each basic model. This would be referred to as an unlimited iteration plan since no termination point is set on the maximum test size. Integer sequential sampling may also be conducted with limited iterations. In this plan, a given maximum sample size is designated as a termination point in the sampling process, e.g., a maximum number of units that may have to be tested is established before making an accept or reject decision.

The other basic type of sequential sampling plan is batch sequential sampling, where a group of units is tested before each accept, reject, or continue testing decision. The unlimited versus limited iteration distinction also applies to batch sequential sampling. With limited iterations, a maximum number of test samples is established prior to the initiation of testing. When this maximum is reached, the testing is curtailed and an accept or reject decision is made on the basis of information obtained in the testing process.

A particular variation of the batch sequential system with limited iterations is the double sampling plan. In this type of plan, a relatively small first test sample is selected and tested. If the test results show that the basic model clearly exceeds the standard, then the model is considered in compliance. If the results demonstrate that the model is clearly below the standard then the model is determined in non-compliance. If the results, however, are close to the standard, a second sample is selected, the test results are combined with the results of the first test sample, and the model is then determined to be in compliance or noncompliance.

The proposed rule incorporates a double sampling plan as a compromise between single and integer sequential sampling plans. The major disadvantage of the integer sequential sampling plan is the test time involved in making decisions under this system. Units of basic models would be required to be tested one at a time in sequence until a decision could be made. Under the batch sequential approach (double sampling), the units selected for the first batch can be tested simultaneously rather than sequentially. If a second batch is necessary, these units can also be tested simultaneously. Therefore, total test time for the batch sequential approach can be minimized. If the integer sequential approach were utilized, then total test time for completing the sampling plan would be equal to the number of units required to be tested multiplied by the time required for conducting the test procedure. In most cases the number of units tested would be about the same under both the integer and batch sequential sampling plans. The anticipated number of test units is four or five for most basic models. If, for example, five units were required to be tested under an integer sequential sample approach, then test time could be 150% greater than the batch sequential approach. If more than five units are required, then this percentage could increase. Test costs in both of these approaches were considered to be equal; therefore the batch sequential plan (double sampling plan) was considered to be superior to all alternatives considered.

6.3 Discussion of Proposed Double Sampling Plan

6.3.1 General Sampling Considerations

Sampling a few units from a population of units inherently involves the risk that the characteristics observed for the sample are not typical of the total population. Some risk is justified by the substantial cost reduction obtained by testing a sample rather than all units produced. This sampling plan, like all sampling plans, has been developed with the factors of sampling risk and cost in mind.

In other previous research and industrial sampling situations, various sampling designs have been combined to balance risk and cost. Based on these situations, the consumer product energy efficiency standards' sampling plan was formed by melding two well accepted methodologies: double sampling and mean efficiency standard. The sampling procedures are statistically valid and adhere strictly to theoretical sampling principles with two constraints required for effective enforcement by DOE. This section discusses initially the sampling plan in general, and second, addresses features required by extreme and unusual basic model characteristics.

The average energy efficiency of all units of a basic model is referred to as the "true mean," and, generally, it is the intent of the sampling procedure to determine whether the true mean of a basic model meets or exceeds the DOE energy efficiency standard. Emphasis is placed on the concept that the tests are conducted to make an inference about the true mean energy efficiency of the model. Should the energy efficiency values of test units indicate with sufficient assurance that the true mean is below the energy efficiency standard, then the model is not in compliance. Thus, the sample test results are the sole source of information used to determine compliance or noncompliance.

DOE recognizes that units of a basic model vary in energy efficiency for a number of valid reasons, including differences in component parts, production, and testing. The distribution with which energy efficiency values could occur for a basic model is illustrated in Figure 6–1. The Figure illustrates normal unit-to-unit variability. In the sampling plan, unit-to-unit variability is measured by the standard deviation or the coefficient of variation. Both the standard deviation and coefficient of variation are standard measures of variability commonly defined in statistics textbooks.

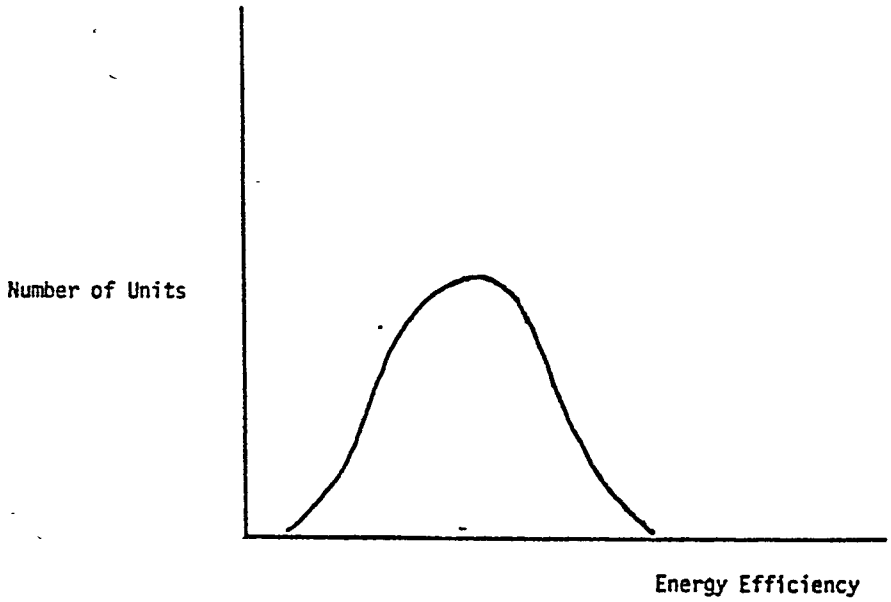

Figure 6-1 Illustration of Distribution of Energy Efficiency Values for Units of a Basic Model

The variability of unit energy efficiencies implies that if the certification decision for an entire basic model is based upon the test results of a single unit, substantial risk is entailed. A single test unit drawn randomly from the population of units of a basic model may by chance have a very high or very low energy efficiency. The public would suffer if, by mere chance, a highly efficient unit were drawn from a model whose true mean energy efficiency is below the standard, and the manufacturer would suffer if a very low energy efficiency unit were drawn from a basic model with a true mean above the DOE standard. The public's and manufacturer's risks are reduced through the application of a statistically meaningful sampling plan and basing the certification decision on the mean energy efficiency of the sample units.

The relationship between the variability of the energy efficiency of individual units and the variability of sample means is treated in the central limit theorem. In the case of energy efficiency testing, the central limit theorem means that the sample mean energy efficiency variability is equal approximately to the standard deviation divided by the square root of the sample size, the approximation becoming increasingly good as sample size increases. A sample size of four units has been shown to be large enough to meet the assumptions of the central limit theorem. Consequently, the minimum sample size appropriate for testing a basic model is four, and certification decisions are made only with sample sizes of four or more. An important application of the central limit theorem is the ability to control the standard error by specifying the sample size. For example, if the standard deviation (variability of the unit energy efficiencies) is 10 and the sample size is 4, then the standard deviation of the sample means (called the "standard error") is equal to 10 divided by the square root of 4 ($10/\sqrt{4}$), or 5. The equation for the standard error is presented as equation 3 in Appendix A of the Certification and Enforcement subpart of the rule. The standard error declines as the sample size increases and, in general, the standard error for a given distribution of unit energy efficiencies is controlled by the size of the sample chosen.

Consequently, the rule contains a well-defined procedure for determining the sample size. By requiring a specified number of units for testing, the sample means of units can be expected to fall within a reasonable range about the standard or, for very efficiently designed units, well above the standard. Such ranges are referred to as "tolerance limits."

In developing the tolerance limits and sample sizes, consideration has been given to the manufacturer's and the public's risks. The manufacturer's risk is the possibility that a model with a true mean equal to the standard is found in noncompliance because the sample mean of the test units is unreasonably low. In statistical hypothesis testing, the risk of falsely rejecting a true hypothesis is generally kept within a range of 1 to 10 percent. The FTC sampling plan usually sets this level at 2.5 percent. DOE's judgment is that a 2.5 percent level of manufacturer's risk is reasonable in terms of sample size and associated test costs. Further, a manufacturer can reduce his risk by designing basic models above the energy efficiency standard. The sampling plan controls the producer's risk at 2.5 percent. This tolerance limit has also been chosen to limit the public's risk of inefficient models being determined in compliance. The DOE tolerance limit for determining sample size is therefore 5 percent of the standard, including a manufacturer's risk of no greater than 2.5 percent that a complaint basic model would be rejected (with the exception of models with extremely high coefficients of variation, discussed in section 6.3.2).

In summary, the primary design for the sampling plan is drawn from statistical sampling principles that are statistically valid and widely applied and discussed in most statistical textbooks. Selected references are listed in Appendix G of TSD #3.

6.3.2 Special Sampling Considerations

In statistical sampling theory and in the procedures set forth in the proposed rule, the size of the sample depends upon the variability of energy efficiency of individual units, the tolerance specified by DOE for the accuracy of the results, and the risk level borne by manufacturers and the public.

The following additional considerations were important in developing the sampling plan:

a. Generally, available information is inadequate for determining the standard deviation of a model;

b. Sample size should be minimized for models with superior mean energy efficiency and low unit-to-unit variability.

Until some testing has been conducted, estimates of variability are unavailable. Consequently, a sampling plan which begins without an estimate of variability is required. Also, DOE desires to reduce the test burden through the selection of a sampling plan if the public's risk is not increased by the adoption of such a plan. A sampling procedure recommended in such situations is the double sampling plan.

Double sampling is a sequential process in which additional testing is contingent upon previous test results. (The procedure is illustrated in Figure 6–2.) In a double sampling plan, a small sample is drawn initially and the units are tested. As discussed above, DOE has determined that the minimum first sample size is four. Following the first test, one of three decisions is reached.

First, a sample mean significantly below the standard implies that the model is in noncompliance. Therefore, testing is curtailed and the model is not certified. The probability of this case occurring erroneously is the "producer's risk" shown in Table 6–2. Second, a sample mean significantly above the standard or a sample mean within the DOE tolerance limits where the variability of the initial sample units are sufficiently small implies that the model is in compliance. Therefore, testing is curtailed and the model is certified. Models which can be tested with small samples are often found in compliance with minimal sample sizes. The probability of this case occurring is shown in Table 6–3, as "Probability of Compliance after First Sample." Third, a sample mean the results of which do not clearly indicate whether the model is complying or not, are used to determine the second sample size. The variability of the units within the first sample, the tolerance limit and the risk level provide the information necessary for determining a second sample size.

Based on the second sample, one of two decisions may be made. First, a sample means of all units tested, which falls significantly below the energy efficiency standard, implies that the basic model has a mean energy efficiency level which fails to comply with the standard. Therefore, the unit is not certified. The risk of not being certified increases rapidly as the true mean energy efficiency of the model declines. Probabilities of non-certification of noncomplying models are reported in Table 6–4. Second, a sample mean which is above the standard or not significantly below the standard (but above the tolerance limit) is accepted as being in compliance.

All testing is stopped following the second sample.

BILLING CODE 6450-01-M

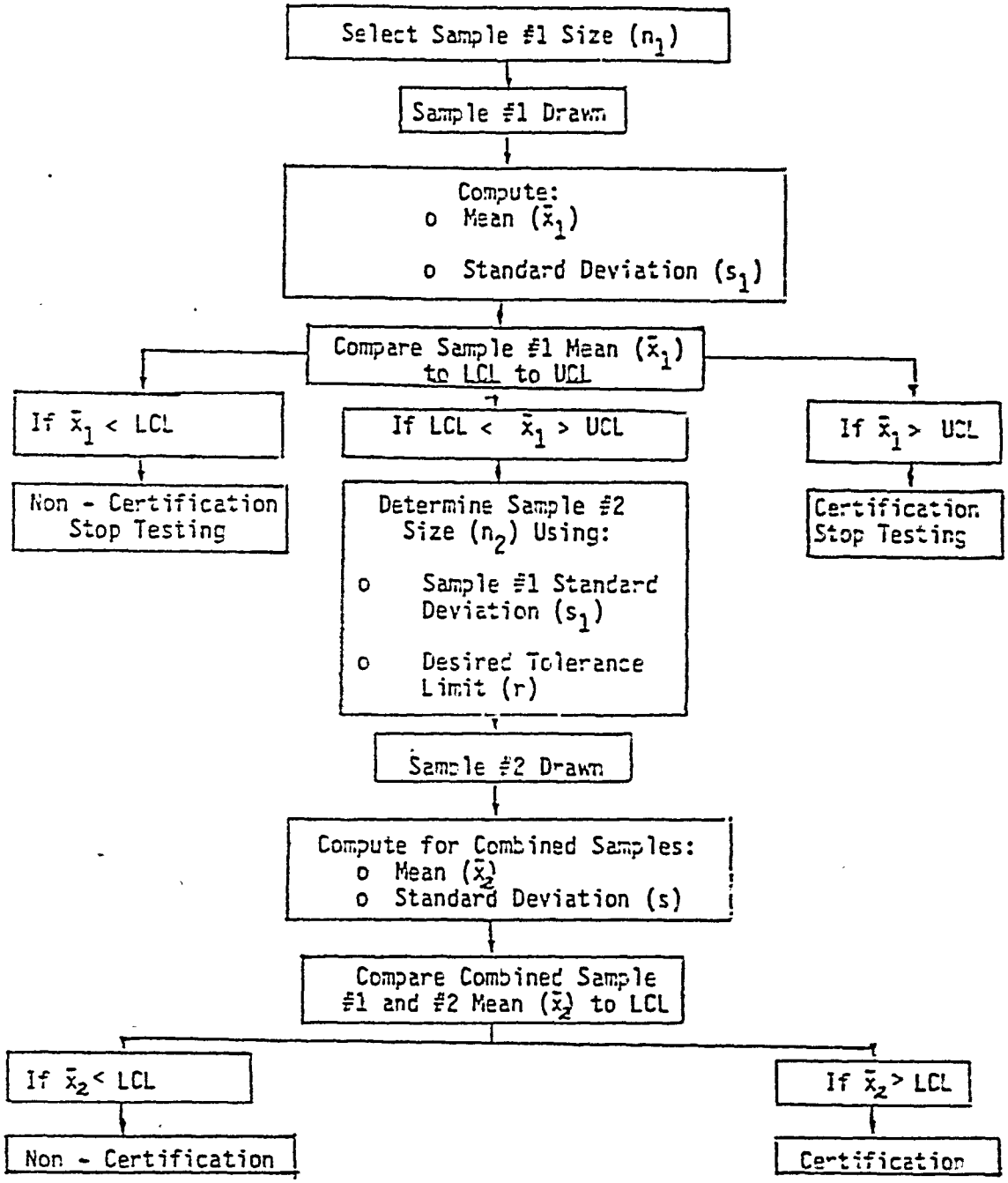

DOUBLE SAMPLING PLAN
(LIMITED BATCH SEQUENTIAL)

FIGURE 6-2

TABLE 1

OPERATING CHARACTERISTICS OF THE PROPOSED SAMPLING PLAN

True Mean Relative to DOE Standard	Coefficient of Variation (CV) and Required Sample Size (n)							
	CV=.02, n=4		CV=.04, n=5		CV=.06, n=8		CV=0.10, n=18	
	Producer	Consumer	Producer	Consumer	Producer	Consumer	Producer	Consumer
-10%	—	0.3%	—	2.5%	—	2.5%	—	2.4%
-7.5%	—	1.2%	—	11.7%	—	13.9%	—	15.2%
-5.0%	—	8.5%	—	50%	—	50%	—	50%
-2.5%	—	73.3%	—	88.3%	—	86.1%	—	84.8%
Same	2.5%	—	2.5%	—	2.5%	—	2.4%	—
2.5%	0.5%	—	0.7%	—	0.5%	—	0.3%	—
5.0%	0.2%	—	0.3%	—	0.1%	—	0%	—
7.5%	0.1%	—	0.1%	—	0.	—	0%	—
10.0%	0	—	0.1%	—	0	—	0%	—

Note: Consumer risk in the probability P(t) that a true mean (μ) relative to the DOE standard ($\bar{x}^*$) of less than 1.0 will generate a sample mean ($\bar{x}$) greater than a given lower confidence limit (LCL):

$$t = \frac{(\mu/\bar{x}^*) - LCL}{CV \div \sqrt{n}} \quad ; \quad P(T \leq t)$$

Producer risk is the probability that a true mean relative to the DOE standard greater than 1.0 will generate a sample mean lower than a given lower confidence limit.

$$1 - P(T \leq t)$$

TABLE 2

PROBABILITY OF CERTIFICATION AFTER FIRST SAMPLE of FOUR UNITS FOR VARIOUS DESIGN LEVELS AND COEFFICIENTS OF VARIATION

True Mean Relative to DOE Standard	Coefficient of Variation	Probability of Compliance After First Sample
1.000	.02	0.975
1.025	.02	0.995
1.050	.02	0.998
1.075	.02	0.999
1.100	.02	1.000
1.000	.04	0.025
1.025	.04	0.073
1.050	.04	0.267
1.075	.04	0.690
1.100	.04	0.915
1.000	.06	0.025
1.025	.06	0.051
1.050	.06	0.115
1.075	.06	0.276
1.100	.06	0.561
1.000	.10	0.025
1.025	.10	0.038
1.050	.10	0.059
1.075	.10	0.096
1.100	.10	0.162

TABLE 3

RISK OF NON-CERTIFICATION INCURRED BY MANUFACTURERS WITH BASIC MODEL TRUE MEANS BELOW DOE STANDARD

True Mean Relative To DOE Standard	Coefficient of Variation (CV) and Required Sample Size (n)			
	CV = .02, n=4	CV = .04, n=5	CV = .06, n = 8	CV = 0.1, n=18
-10%	99.7%	97.5%	97 5%	97 6%
-7.5%	98 8%	88.3%	86 1%	84 8%
-5.0%	91 5%	50%	50%	50%
-2.5%	26 7%	11.7%	13 9%	15.2%

Note: These calculations based on the producer's risk equation:

$$t = \frac{(\mu/\bar{x}^*) - LCL}{CV \div \sqrt{n}} \quad ; \quad 1 - P(T \leq t)$$

BILLING CODE 6450-01-C

The double sampling plan follows the procedures set forth in standard works on the subject (H.F. Dodge and H.G. Roming, *Sampling Inspection Tables: Single and Double Sampling, Second Edition,* John Wiley & Sons, Inc., New York, 1959; and G. B. Wetherill, *Sequential Methods in Statistics,* John Wiley & Sons, Inc., New York, 1966), except for two features:

a. The minimum sample mean acceptable for compliance is 0.900 times the efficiency level of the applicable energy efficiency standard; and

b. The maximum sample size to be selected for enforcement testing is 20 units.

These constraints are required to assure attainment of objectives and to provide for establishment of a viable enforcement program. Both features are designed to reduce consumer risk (risk of inefficient models receiving compliance) for models with extreme variability (coefficients of variation greater than 0.1). When a model has an extreme variability, the estimate of the required second sample size is more prone to error than in the case of models with smaller variability. Also, models with extreme variability are likely to require substantial testing cost and time to demonstrate compliance or noncompliance. Consequently, DOE is seeking to limit the maximum number of units to be tested for enforcement purposes to assure timely and effective enforcement action. It should be noted that these restrictions apply only to models with extremely large coefficients of variation.

Information supplied DOE by industry sources which has not been substantiated indicates that only in a few cases is a coefficient of variation of .05 ever exceeded.

DOE solicits any additional data or comments on coefficient of variation related to energy efficiency standards and potential test sample sizes of the proposed double sampling plan.

BILLING CODE 6450-01-M

6.3.3 EXAMPLES OF DOUBLE SAMPLING

The first example presents a situation in which compliance is found for a basic model after the first sample is drawn and tested. According to the certification rule, four production test units of room air conditioners are selected in accordance with the specified random selection procedures of this proposed rule. The DOE energy efficiency standard is assumed to be 8.4. The test results of the four units are as follows:

a. 8.5
b. 8.4
c. 8.5
d. 8.2

The first sample mean ($\bar{x}_1$) and standard deviation (s_1) using the units in the first sample (n_1) are computed. The sample mean is computed according to step 2 of Appendix A of this subpart, as follows:

$$\bar{x}_1 = \frac{1}{n_1} \left(\sum_{i=1}^{n_1} EE_i \right)$$

where

$\bar{x}_1$ is the sample mean

n_1 is the number of units in the first sample.

EE_i is the measured energy efficiency of unit i.

Therefore, $\bar{x}_1 = \frac{8.5 + 8.4 + 8.5 + 8.2}{4}$

$\bar{x}_1 = 8.4$

The standard deviation (s_1) of the measured efficiency level for the first sample is calculated according to step 3 with the following formula:

$$s_1 = \sqrt{\frac{\sum_{i=1}^{n_1} (EE_i - \bar{x}_1)^2}{n_1 - 1}}$$

$s_1 = .141$

The standard error of the sample mean ($s_{\bar{x}}$) is estimated according to step 4 as follows:

$$s_{\bar{x}_1} = \frac{s_1}{\sqrt{n_1}} = \frac{.141}{\sqrt{4}} = .071$$

With the estimated standard error of the sample mean, the upper and lower confidence limits are calculated according to step 5 as:

$LCL = EEL - t\, s_{\bar{x}_1}$

$UCL = EEL + t\, s_{\bar{x}_1}$

where EEL is the applicable energy efficiency standard and a statistic based on confidence level (95%) and sample size. (t-statistics values are given in Table A-5 of Appendix A to the rule.)

Using an 8.4 energy efficiency rating as EEL,

$LCL = 8.4 - 3.182\ (.071) = 8.2$, and

$UCL = 8.4 + 3.182\ (.071) = 8.6$.

According to step 6, the sample mean ($\bar{x}_1$) of 8.4 is compared to the upper and lower confidence limits. The sample mean falls between the upper confidence limit (8.6) and the lower confidence limit (8.2), and therefore, a second sample size must be determined. It is necessary to continue with step 7. The example will continue using the alternate procedure of Appendix A..

The coefficient of variation is calculated by dividing the standard deviation (s_1) by the sample mean ($\bar{x}_1$).

$$CV = \frac{s_1}{\bar{x}_1} = \frac{.141}{8.4} = 0.017$$

From Table A-4, the required minimum sample size of 4 units is determined. In the first sample, 4 units were tested, and consequently no further sampling is required. The sample mean is greater than the lower confidence limit. Therefore, the model is found to be in compliance.

A second example is presented to illustrate a basic model which is certified after the second sample. Following step 1 of Appendix A of this subpart, four production test units of room air conditioners are selected in accordance with the specified random sample selection procedures of this proposed rule. The energy efficiency (EE) test results of the four units are as follows:

a. 7.7
b. 7.9
c. 8.5
d. 8.7

The first sample mean ($\bar{x}_1$) and standard deviation (s_1) using the units in the first sample (n_1) are then computed. The sample mean is computed according to step 2 as follows:

$$\bar{x}_1 = \frac{1}{n_1} \left(\sum_{i=1}^{n_1} EE_i \right)$$

where

$\bar{x}_1$ is the sample mean.

n_1 is the number of units in the first sample.

EE_i is the measured energy efficiency of unit i.

Therefore, $$\bar{x}_1 = \frac{7.7 + 7.9 + 8.5 + 8.7}{4}$$

$$\bar{x}_1 = 8.2$$

The standard deviation (s_1) of the measured efficiency level for the first sample is calculated according to step3 with the following formula:

$$s_1 = \sqrt{\frac{\sum_{i=1}^{n_1} (EE_i - \bar{x}_1)^2}{n_1 - 1}}$$

$$s_1 = .476.$$

The standard error of the sample mean ($s_{\bar{x}}$) is estimated according to step 4 as follows:

$$s_{\bar{x}_1} = \frac{s_1}{\sqrt{n_1}} = \frac{.476}{\sqrt{4}} = 0.238$$

With the estimated standard error of the sample mean, the upper and lower confidence limits are calculated according to step 5 as:

$$LCL = EEL - t\, s_{\bar{x}_1}$$

$$UCL = EEL + t\, s_{\bar{x}_1}$$

where EEL is the DOE energy efficiency standard and t is a statistic based on confidence level (95%) and sample size. (t-statistics values are given in Table A-5 of appendix A to the rule.)

Using an 8.4 energy efficiency rating as EEL,

$$LCL = 8.4 - 3.182\ (.238) = 7.6$$

$$UCL = 8.4 + 3.182\ (.238) = 9.2$$

According to step 6, the sample mean ($\bar{x}_1$) of 8.2 is compared to the upper and lower confidence limits. In this example, the sample mean is between the confidence limits, and the initial sample is insufficiently large to provide lower and upper confidence limits that lie within a tolerance limit of plus or minus 5 percent of the applicable standard. Therefore, further testing is required.

Continuing with this example, it is necessary to proceed to step 7 of Appendix A. The example will continue using the alternate procedure of Appendix A. Table A-4 is used to calculate the sample size for n_2. The coefficient of variation is calculated by dividing the standard deviation (s_1) by the sample mean ($\bar{x}_1$).

$$cv = \frac{s_1}{\bar{x}_1} = \frac{.476}{8.2} = 0.058$$

By entering Table A-4 with a coefficient of variation equal to .058, n_2 is found to be equal to 8 minus n_1, or, using the example, n_2 is equal to 4 units required to be tested. The additional test units are selected and tested. For example, the results of the additional testing are as follows:

a. 7.7

b. 8.0

c. 8.4

d. 8.7

Under steps 8 and 9 it is necessary to compute the sample mean ($\bar{x}_2$) and standard deviation (s_2) using the units tested in both the first and second samples. Using the formulas given under steps 8 and 9 the calculations are

$$\bar{x}_2 = \frac{1}{n_1 + n_2}\left(\sum_{i=1}^{n_1+n_2} EE_i\right)$$

$$= \frac{7.7 + 7.9 + 8.5 + 8.7 + 7.7 + 8.0 + 8.4 + 8.7}{8} = 8.2$$

and

$$s_2 = \sqrt{\frac{\sum_{i=1}^{n_1+n_2} (EE_i - \bar{x}_2)^2}{n_1 + n_2 - 1}} = 0.426$$

Under step 11 compute the lower confidence limit for the sample mean with a confidence level of 97.5 percent (one-tailed test). This can be done by using Table A-3 and a calculation of the new coefficient of variation.

$$cv = \frac{s_2}{\bar{x}_2} = .052$$

With the new cv of .052 and a total test sample size of 8 entering table A-3, the value is .958. This is multiplied by the DOE standard to determine the new LCL.

BILLING CODE 6450-01-C

LCL = .958 × 8.4 = 8.047

According to step 12 if the sample mean (X_2) were less than the lower confidence limit, the basic model would be determined to be in noncompliance. If the sample mean is greater than the LCL, the basic model is determined to be in compliance. In this example, the sample mean (X_2) is greater than the LCL and the model is in compliance.

8.22 EE > 8.047 EE

Only in a very few cases, for basic models with high unit-to-unit variability, might the lower confidence limit, after a second test sample, be lower than 90 percent of the applicable energy efficiency level. In such cases, DOE requires that the calculated lower confidence limit be replaced by a value equal to 90 percent of the applicable standard prior to making a compliance/noncompliance determination. This minimum applies to all certification and enforcement efficiency testing conducted under the proposed rule.

6.3.4 Random Selection of Test Units. The following is the basic process for selecting individual production units for required certification or enforcement testing:

A batch is defined as the collection of production units of a basic model from which individual test units may eventually be selected. It shall include all production units produced during a two-day or longer period, or produced during a specific production run if it is shorter than two days. A batch is normally defined in terms of production over a specified period of time. For the purposes of certification testing, the manufacturer may define the batch over an extended period of time, so as to include different production runs, manufacturing facilities, or other variables. For the purposes of a DOE enforcement test audit, a batch may be defined to include all production units on a manufacturer's premises at a specific period of time.

Individual test units are selected from the batch in the following manner: First, a batch sample is randomly selected from the batch. Second, individual test units are randomly selected from the batch sample. To assure that an adequate number of units are available to complete the testing without retaining the entire batch, a batch sample of no fewer than 20 units is selected and retained. Assuming that the batch sample size is sufficient to assure completion of the testing, there is no need to retain the remainder of the batch.

Each selection, whether of units for the batch sample or of individual test units, shall be made by the following random process:

(a) All units in the batch or batch sample, from which the selection is to be made, are sequentially numbered.

(b) A random numbers table is used to determine the numbers of the units in the collection to be selected.

The purpose of the random sample selection is to eliminate potential bias in the test sample results caused by intentional or unintentional systematic selection of units with above or below average energy efficiencies. With a random selection, each unit is just as likely to be selected as any other unit in a given collection, i.e., batch or batch sample.

Recognizing that there may be alternative methods of selecting units at random, DOE solicits comments on the random selection process proposed.

There will be occasions when DOE under an enforcement test audit may have reason to suspect that units of a basic model being manufactured at a specific facility or using components from a specific supplier are more likely to be in noncompliance than other units of the same basic model. There may be situations where a manufacturer has changed component suppliers or is assembling some of the units with different configurations than other units within the basic model. To have an effective enforcement approach it is necessary for DOE to assure that all configurations of the basic model meet the applicable energy efficiency standards. Under these circumstances, a DOE inspector may subdivide the batch utilizing specific criteria (i.e., date of manufacture, component supplier, location of manufacturing facility or other criteria which may differentiate one unit from another within a basic model). The batch sample will then be randomly selected from one or more subdivided groups within the batch.

6.3.5 Skewness. Skewness which is defined as a nonsymmetrical frequency distribution around the mean, is a potential problem. In the case of skewed distributions, the frequencies of energy efficiency factors for a basic model are different from a normal distributed frequency. Although this condition is assumed to be nonexistent, there is the possibility that it actually does exist. Therefore, the existence of skewness and its effects may bias the statistical tests. The assumption of a symmetrical distribution becomes increasingly valid as the sample size increases. Tests conducted on samples of various sizes lead to the conclusion that if at least 4 units are tested, skewness is not unusually extreme. Thus, by using a mean standard and sample sizes of at least 4 units, the effect of skewness is expected to be slight.

See TSD No. 3, Certification and Enforcement Analysis for further discussion.

6.4 Certification

Basic compliance with the energy efficiency standards under the proposed rule will be insured by the manufacturers of the covered products. The method by which they will achieve this is by testing of basic models before their distribution by the sampling methods discussed earlier and by the test procedures prescribed by DOE regulations. The results of such tests and the data on which they are based will be submitted to DOE as a statement of compliance and will constitute the basis on which the manufacturer's certification of compliance rests. These requirements apply to current models which are in production on the effective date of the final rule, and to any new models produced after that date.

6.4.1 Pre-Certification Report

A pre-certification report for all covered products manufactured shall be submitted by certified mail within 60 calendar days after the promulgation date of this rule and shall include:

(1) A list of the covered products manufactured or sold;

(2) A list of the models of each covered product manufactured, grouped according to basic model;

(3) Starting serial numbers or other numbers identifying the date of manufacture of covered products; and

(4) A scheduled of anticipated certification testing.

A pre-certification report will be required to be submitted by certified mail for all new models subsequently manufactured at least 60 days prior to planned certification testing. All requirements of the pre-certification report are given in Appendix C to the rule.

6.4.2 Certification Report

A certification report, based on the testing of production units, will be required for each covered basic model prior to distribution in commerce. Although the product certification report is not an annual requirement for each covered basic model, DOE anticipates that recertification testing and reporting of up to 10 percent of all carry-over basic models each year may be requested. Considerations that may affect the Secretary's decision to require recertification include: a change in the standard for the basic model in question; performance of the basic model based on certification and

enforcement test data; and, the number and type of design or other changes incorporated into the basic model that may affect energy usage, i.e., changes in production processes or facilities, in quality control practices, in component suppliers.

Each certification report will include a "statement of compliance" executed in accordance with the requirements of the proposed rule. The "statement of compliance" includes a declaration by the manufacturer that all batches of the basic model including all models and all configurations within the basic model are represented by the units reported in the certification report for that basic model and comply with the applicable energy efficiency standards. The certification report will include: test data necessary for determination of product compliance, a description of the basic model, a list of manufacturer model numbers represented by the basic model being certified and information on anticipated production and certification test schedules of the model. Copies (using standard size paper) of all pertinent test data must be retained on file by the manufacturer for possible DOE review.

A manufacturer's certification of compliance of a basic model must be based on the testing of production units in accordance with the sampling plan set forth in Appendix A of the proposed rule.

6.4.3 Conditional Certification

DOE has mitigated possible adverse effects of the above production unit testing requirement on the introduction of new products. The proposed rule provides for a manufacturer to submit a certification report, allowing distribution in commerce for a prescribed limited period of time, based on the testing of one of more nonproduction units. A conditional certification report that includes a compliance statement based on nonproduction unit testing must be submitted by certified mail at least 60 days prior to distribution in commerce of the basic model and must include a schedule for anticipated certification testing of production units. The nonproduction unit testing must conform with the following requirements:

1. Units tested shall be representative of production units with respect to all energy efficiency and consumer discernible characteristics;

2. One valid test shall be conducted for each unit in accordance with applicable DOE test procedures;

3. If a manufacturer has tested prototype units to satisfy test requirements of the Federal Trade Commission Labeling Rule, and production of the first batch of that basic model has not begun, then the results of all such tests shall be included in the "conditional" certification test data;

4. Each unit tested shall have an energy efficiency that is no less than the applicable energy efficiency standard for the subject basic model to be determined to be in compliance; and,

5. If any unit tested has a measured energy efficiency that is less than the applicable energy efficiency standard, the basic model is determined to be in noncompliance.

Continued distribution of a "conditionally certified" basic model is contingent on the required production unit testing being conducted on test units drawn randomly from the first available production of the basic model. A new statement of compliance and test results meeting the sampling requirements shall be submitted in a certification report by certified mail within a specified number of a calendar days from the start of production for that model, as follows:

(1) Furnace and boilers: 20 days.
(2) Water heaters: 20 days.
(3) Refrigerator/freezers: 55 days.
(4) Kitchen ranges and ovens: 20 days.
(5) Central air conditioners: 40 days.
(6) Clothes dryers: 20 days.
(7) Room air conditioners: 20 days.
(8) Freezers: 55 days.

The above schedule for submitting the supplemental product certification report reflects the differences in the time required to test different products. The allotted number of days is based upon the estimated time required to sequentially test four units of each product. The time allotted to "refrigerators/refrigerator-freezers" and "freezers" is based upon a proposed amendment to the test procedures for these product categories that requires the use of no more than two test points. DOE may grant an extension of time to complete testing, upon a written request from the manufacturer, if supported by evidence that additional time is necessary (e.g., evidence that the testing of more than four units is required).

6.4.4 Quarterly Post-Certification Report

The proposed rule calls for the submission of a quarterly post-certification report by certified mail for each basic model, beginning three months after the date of the certification report, which includes:

1. Substantive revision required to update the information contained in the product certification report (e.g., additions to or deletions from the model numbers being manufactured under a given basic model);

2. A description of other major events that might affect the energy efficiency of any covered product/model (e.g., modifications in production processes);

3. The number of energy efficiency tests performed according to DOE test procedures since the last quarterly report and the summary test data from each test; and

4. Schedules of anticipated production and energy efficiency testing.

6.4.5 Private Labeler Reporting Requirements

Private labelers are required to submit pre-certification, certification, and post-certification reports that conform to the same requirements prescribed for manufacturers for all basic models they distribute in commerce, with the exception that private labelers are not required to conduct certification tests to demonstrate the compliance of their products with DOE standards. In lieu of such tests, they may submit:

(1) A signed statement from the actual manufacturer that the required testing has been conducted and that the tests demonstrate compliance of the basic model.

(2) The date of the manufacturer's certification submittal to DOE.

(3) The location of the underlying test data.

Manufacturer and private labeler reporting requirements are summarized in Table 6–4.

6.4.6 Retention of Certification Test Units

The production unit, tested to satisfy a basic model's certification test requirements, which has the highest measured energy efficiency among all units included in the certification test sample, shall be retained by the manufacturer. The unit shall be retained in retestable condition for not less than two years after the basic model has ceased to be produced by the manufacturer. The proposed rule also provides for the retention of all other production test units for 30 calendar days after the date of filing of the statement of compliance and certification report unless DOE notifies the manufacturer to retain such units for an additional 120 days. The reason for this is to enable DOE to exercise its option to retest such units under section 430.72 of the rule to verify a manufacturer's certification statement of compliance.

If the manufacturer elects to submit a statement of compliance with a conditional certification report based on the testing of nonproduction units, then

the manufacturer must retain such nonproduction units. The nonproduction units must be retained in retestable condition until the manufacturer completes the certification production unit testing requirements.

Table 6-4.—*Summary of Required Submittals*

Name of report	Date of initial submittal	Requirements for additional submittals
Precertification report	Within 60 days after rule is published for existing models. At least 60 days prior to certification testing for new models.	None
Conditional certification report	At least 60 days prior to distribution in commerce (based on testing of other than production units).	None.
Certification report (if not preceded by conditional certification).	Prior to distribution in commerce if based on production unit testing.	None unless requested by the Secretary
Certification report (if preceded by conditional certification.	Within 20 to 55 days (depending on product category) of the beginning of production, only if the product certification report is based on the testing of other than production units.	
Post certification report	Three months after the date of the product certification report.	Quarterly

from which the units are to be selected, the batch sample and test sample selection plans, the date at which a DOE inspector will select the batch sample and test sample, the date at which testing shall begin, the date by which testing is scheduled to be completed and the facility at which testing will be conducted. The Test notice may provide for testing of alternative basic models where the selected basic model is unavailable for testing.

DOE may seek a judicial order restraining a manufacturer from distributing in commerce any covered product with respect to which a manufacturer refuses to comply with the provisions of a test notice issued by DOE pursuant to the rule or refuses to comply with any of the applicable provisions of the rule.

6.5.1 Supply of Products for Testing

DOE may request, in a test notice that a manufacturer supply at his expense a reasonable number of units of a specific basic model to any laboratory designated by the Secretary. The number of units of a basic model specified in a test notice shall not exceed twenty, unless units that are supplied fail to complete the test. All test data conducted under enforcement testing at a designated laboratory shall constitute official test data for that basic model. Such test data will be used by DOE for determination of compliance or noncompliance of the basic model being audited in accordance with applicable provisions of the rule if sufficient number of tests have been conducted in accordance with Appendix A of this subpart.

The manufacturer will be required to pay shipping expenses for those units supplied to the DOE designated laboratory. DOE will pay all test costs associated with performing the testing at the laboratory to the extent provided in appropriation Acts. Testing at the independent laboratory may be witnessed by the manufacturer, or his designated representative.

6.5.2 Enforcement Testing

Unless otherwise specified, DOE will require a first test sample size of four units. Fewer than four units may be specified in the first test sample by DOE, but in those situations no compliance or noncompliance determination will be made.

One test will be conducted in accordance with applicable DOE test procedures for each unit selected for testing. Compliance or noncompliance determinations are made according to the double sampling plan prescribed in Appendix A of the rule.

If a second test sample is required to obtain a compliance or noncompliance determination, the first test sample results will be used to determine the number of additional test units required to make a compliance or noncompliance determination in accordance with the requirements of Appendix A of the rule.

If, using the applicable provisions of Appendix A, a total required sample size exceeds 20, testing will be terminated after 20 units with the lower confidence limit (LCL) calculated for a test sample size of twenty. If the calculated LCL is less than 90 percent of the applicable energy efficiency level, the determination of compliance or noncompliance shall be made on the basis of an LCL equal to 90 percent of the energy efficiency level.

6.6 Other Certification and Enforcement Provisions

6.6.1 *Rights of Entry and Inspection.* Any inspection activities conducted by DOE inspectors will, among other things, be for the purpose of determining: (1) whether certification tests are being conducted pursuant to the requirements of this rule; (2) whether products manufactured for distribution in commerce conform to applicable standards; and (3) whether required records are being properly maintained. The DOE inspector shall be given entry to any facility or site of a manufacturer or private labeler during normal operating hours: where required tests are conducted or activities connected with such tests are or were performed; where any test unit is present; and where records, reports, other documents, or information required to be maintained or submitted are located.

The DOE inspector, upon entering the facility or site, will be furnished such reasonable assistance as may be necessary to complete his duties. A manufacturer, private labeler, or other person subject to the Act and this rule will be required to cause those in charge of a facility or site to furnish such assistance without charge to DOE.

The provision of right of entry shall apply whether the facility or site is owned or controlled by the manufacturer or private labeler. If a manufacturer enters into a contract with a testing laboratory to conduct required certification testing, such contract should include notice of DOE's right to observe such testing and to inspect the results thereof.

6.6.2 *Manufacturer Responsibility for Monitoring Compliance.* A manufacturer will be required to monitor the production of covered products after certification in order to assure continued

compliance of each basic model with applicable energy efficiency standards.

If, after a basic model has been certified by a manufacturer to be in compliance with applicable energy efficiency standards, the manufacturer has reason to believe that the mean energy efficiency level of the basic model is or may be below the applicable energy efficiency standard, the manufacturer will immediately notify DOE and provide a description of the information or event which gives rise to such belief; and take all necessary action to determine if the model is in noncompliance and the extent to which noncompliant units, if any, have been distributed in commerce. Failure to comply with these requirements may make the manufacturer subject to a civil penalty for a "knowing violation," as defined in the Act, or such other action as may be permitted by law.

6.6.3 *Prohibited Acts.* The prohibited acts which subject a manufacturer or private labeler to assessment of a civil penalty in accordance with Section 333 of the Act, are:

(1) Failure to permit access to, or copying of records required to be supplied under the Act and this rule, or fail to make reports or provide other information required to be supplied under the Act and this rule;

(2) Failure of a manufacturer to supply at his expense a reasonable number of covered products to a test laboratory designated by the Secretary;

(3) Failure of a manufacturer to permit a representative designated by the Secretary to observe any testing required by the Act and this rule and inspect the results of such testing; and

(4) Distribution in commerce by a manufacturer or private labeler of any new covered product which is not in compliance with an applicable energy efficiency standard prescribed under the Act and this rule.

The assessment of such civil penalties shall be for a knowing violation of a prohibited act. Such a violation is defined in the Act as: (1) the having of actual knowledge, or (2) the presumed having of knowledge deemed to be possessed by a reasonable man who acts in the circumstances, including knowledge obtainable upon the exercise of due care.

6.6.4 *Field Test Exemption.* A field test exemption may be granted by the Secretary to a manufacturer or private labeler, upon request, for the following purposes: research, investigations, studies, demonstrations, or training. The request shall include the number of units involved, the duration of the field test, the ownership arrangement of the units, and the final disposition of the units.

6.6.5 *Imported and Exported Products.* Noncomplying products may not be imported into United States commerce. Under the Act, the compliance of imported products with energy efficiency standards is under the jurisdiction of the Department of the Treasury. DOE and the Department of the Treasury are currently working on an agreement concerning the implementation of this statutory requirement.

Any covered product, intended for export, shall be labeled or marked "For Export Only" in an easily visible location on the outside of the container and on the product itself and shall be exempt from the prohibition and requirements of the Act and this rule.

6.7 Estimated Manufacturer Test Costs Under the Proposed Approach.

Additional costs incurred by manufacturers as a result of certification and enforcement requirements of the proposed rule relate primarily to the cost of manufacturer certification testing. The cost of supplying products to DOE (product plus shipping costs) for enforcement audit testing at testing laboratories results in an additional, but substantially lesser, cost element than manufacturer certification does. Other costs (e.g., completing the non-test-related portions of the product certification report) are considered relatively small. DOE solicits comments on the cost impacts to manufacturers and private labelers of these requirements.

Two types of testing are involved in the proposed rule: certification testing by the manufacturer and enforcement audit testing by DOE. Table 6–6 presents upper bound estimates of test-related costs to be incurred by manufacturers during the first year of the proposed Certification and Enforcement Program. Test costs in subsequent years will be substanially lower than those for the first year, since carryover models will not normally require additional certification testing.

Certification testing requires the testing of four or more production units by the manufacturer. The estimates given are based on an assumption that 75 percent of all basic models will be certified with a sample size of 4 and that the remaining 25 percent will require an average sample size of 8. This gives an average sample size of five production units per basic model tested for certification. In addition, it is assumed that 20 percent of all models are new, and that an average of two protype units are tested per new basic model to obtain conditional certification. The cost of testing to satisfy FTC labeling requirements (applicable to all products except for kitchen ranges, ovens and clothes dryers) has been eliminated from the estimates in Table 6–6.

It is also assumed that 20 percent of all basic models will receive enforcement test audits by DOE at test laboratories. These frequencies would result in the audit testing each year of virtually all models determined by DOE to be marginally close to the applicable standard.

Total manufacturer test costs appear small relative to the value of manufacturer shipments. For all products except central air conditioners, manufacturer test costs average less than 0.3 percent of the value of shipments during the first year of the proposed Certification and Enforcement Program, and even less in subsequent years. The upper bound estimate of manufactuer test costs for central air conditioners during the first year approximate 1 percent of the value of manufacturer shipments.

Table 6–6.—*Manufacturer First Year C/E Costs*

[Upper Bound Estimates]

Product	Test cost per basic model	Number of basic models	Total test costs (000)	Value of manufacturer shipments (000,000)	Test costs as a percent of value of shipments
1. Furnaces and Boilers	$905	1935	$1,752	$622.8	0.28
2. Water Heaters	2,145	750	1,609	601.5	0.27
3. Refrigerators/Refrigerators-Freezers	1,720	165	284	2,118.2	0.01
4. Kitchen Ranges/Ovens (gas only)	3,801	200	760	663.3	0.14
5. Central Air Conditioners	3,853	1500	5,780	596.1	0.97
6. Clothes Dryers	2,280	50	114	478.5	0.02
7. Room Air Conditioners	1,337	800	1,069	1,100.5	0.10
8. Freezers	1,641	120	197	303.5	0.06
All products			11,564	6,374.3	0.18

6.8 Additional Certification and Enforcement Issues.

6.8.1 *Relationship between DOE Enforcement of Standards and Industry Trade Association Programs.* The Department of Energy's proposed rules include no utilization of existing or potential trade association testing and certification programs. (The manufacturer, of course, may utilize such programs in order to accomplish testing required for product certification, as long as all requirements of the proposed rule are accomplished.) DOE realizes that not all manufacturers are represented in the industry trade association programs. DOE has proposed a certification and enforcement plan for each of the covered products that will be applicable to all manufacturers and private labelers.

Consideration by DOE of trade association programs as they may impact DOE's enforcement approach requires an investigation of several issues to determine whether the public will be better served through the utilization of these programs. DOE solicits comments on:

(1) The effectiveness of liaison and advisory functions served to industry by trade associations and the extent to which these functions can be utilized by DOE;

(2) The potential benefits and concerns of utilizing trade associations as an intermediary between DOE and manufacturers;

(3) The criteria which should be established for initial acceptability of specific trade association programs and for monitoring the performance of these programs;

(4) How could the use of trade association programs distribute costs more equitably between large and small manufacturers;

(5) To the extent that DOE enforcement involves the use of proprietary information, could the use of trade associations mitigate the concerns of manufacturers without decreasing the usefulness of enforcement information; and

(6) The ability of DOE and the trade association to agree upon procedures for establishing the utility of specific trade association programs to assist DOE's program objectives.

DOE decision concerning possible utilization of industry trade association programs awaits further investigation of these issues. DOE requests comments on the applicability of industry programs for incorporation into the DOE's certification and enforcement program.

6.8.2 *Test Variability Among Different Test Facilities.* In accordance with today's proposed rule, the testing conducted to enforce the energy efficiency standards for consumer products would be conducted at testing laboratories selected by DOE. Such test results would be compared to the prescribed energy efficiency standard for the class of consumer product to which the tested basic model belongs to determine whether the basic model is in compliance with the applicable standard.

In adopting the proposed rule, DOE has evaluated procedures of existing industry certification programs for using testing laboratories to determine compliance. DOE notes that the approach of these industry certification programs is the same as that of the proposed DOE enforcement program, i.e., the results of the tests conducted by the designated test laboratory are taken to be correct, regardless of any difference between those results and the results obtained by tests conducted at a manufacturer's test facility.

To enable participating consumer product manufacturers to correlate test results obtained at their own test facility with those obtained at a certification test laboratory, industry certification programs have sponsored "round-robin" test programs. (Round-robin testing involves testing units at more than one facility). After a sufficient number of round-robin tests have been conducted, a manufacturer is able to predict the test results that would be obtained by a testing laboratory for a particular unit based on the results of tests conducted at his own facility.

Toward quantifying the variability in test results to be expected between different test facilities, DOE requested the National Bureau of Standards to evaluate this factor for all of the DOE test procedures for consumer products. To make these determinations, NBS calculated the combined effect of the contribution of allowable test conditions or test measurement tolerances specified in the measures of efficiencies of each of the test procedures. The results represent the variability to be expected between test facilities solely due to the allowable tolerances for testing. Variability due to random measurement, recording, calculation, or instrument error, etc., are not addressed by this analysis. For results of the analysis, refer to Table 6-7.

DOE is currently planning a round-robin test program for consumer products involving manufacturer's and testing laboratories. The effort, which will be headed by NBS, will assist manufacturers to estimate potential variability between their facilities and the testing laboratories.

6.8.3 *Small Manufacturer Concerns.* DOE recognizes that the proposed rules will not impact all manufacturers in the same way, and is particularly sensitive to potential adverse impacts on small manufacturers. Particular concern has been expressed by small manufacturers about (1) the possible need for large capital investments in new test facilities, and, (2) the extent to which manufacturer test facilities and technical staff will be diverted from necessary research and development and quality control activities unless adequate time is allowed to adjust to DOE-required efficiency testing.

DOE requests further comments on these potential impacts, as well as any financial data which is relevent for their assessments.

Table 6-7.—*Uncertainty of Measures of Efficiency Determined Using DOE Test Procedures*

Product	Uncertainty* (energy factor) (percent)
Refrigerators, refrigerator-freezers & freezers:	
1. Single temperature control w/o antisweat heater switch	±10
2. Single temperature control w/ antisweat heater switch	±12
3. Dual temperature control w/o antisweat heater switch	±13
4. Dual temperature control w/ antisweat heater switch	±15
Room air conditioners:	
1. Cooling capacity 5,000–10,000 Btu/hr	±8
2. Cooling capacity 10,000–20,000 Btu/hr	±5
3. Cooling capacity 20,000–36,000 Btu/hr	±3
Central air conditioners:	
1. Cooling only:	
a. Single speed compressor:	
i. Capacity <20K Btu/hr	±7
ii. Capacity 20K–36K Btu/hr	±6
iii. Capacity 36K–55K Btu/hr	±5
b. Two speed compressor, two compressors, or cylinder unloading:	
i. Capacity <20K Btu/hr	±9
ii. Capacity 20K–36K Btu/hr	±8
iii. Capacity 36K–65K Btu/hr	±6
2. Cooling and heating units:	
a. Single speed compressor:	
i. Capacity <20K Btu/hr	±11
ii. Capacity 20K–36K Btu/hr	±9
iii. Capacity 36K–65K Btu/hr	±7
b. Two speed compressor, two compressors, or cylinder unloading:	
i. Capacity <20K Btu/hr	±13
ii. Capacity 20K–36K Btu/hr	±11
iii. Capacity 36K–65K Btu/hr	±9
Clothes dryers:	
Energy factor	±2
Water heaters:	
Energy factor, electric	±1.5
Energy factor, gas	±2
Kitchen ranges and ovens:	
Energy factor, electric ovens, electric oven, self-cleaning, gas cooking top	±3
Energy factor, gas oven, gas oven, self-cleaning	±2
Furnaces:	
Annual fuel utilization efficiency	±4

*The probability that the measure of efficiency determined for any given product for any given test will fall within the uncertainty range specified is 95 percent.

Note.—DOE is currently involved in refining the uncertainty analysis performed on the test procedures to quantify the uncertainty of the measures of efficiencies by product class for each product type.

7. Effect on Other Law

DOE is today proposing to amend Subpart D of 10 CFR Part 430 entitled "Petitions for Prescription of a Rule to Supersede a State Appliance Energy Use or Efficiency Standard." This subpart was issued pursuant to section 327(b)(1) of EPCA which provided for the preemption of State energy efficiency standards once Federal standards were prescribed. States and manufacturers had the right to petition the Secretary of Energy to be exempted from preemption or to preempt a State standard, respectively.

The National Energy Policy Conservation Act amended section 327(b) to establish a period of automatic preemption of State standards prescribed after January 1, 1978. This automatic preemption of standards ends on July 1, 1980, for the thirteen consumer products listed in section 322(a) of the Act. The Act permits manufacturers to petition DOE for a rule preempting the State standards pending prescription of a Federal standard. After July 1, 1980, once a Federal standard is prescribed for any product, all State standards for such a product are preempted, regardless of when the State standard was enacted. The Act also permits States to petition DOE for a rule that a State energy efficiency standard or other requirement not be preempted.

Under NEPCA, the burden of proof for a petitioner who is a State has been modified. Under current law, the Secretary is required to determine the extent to which the State regulation would unduly burden interstate commerce. A petitioning State does not have to prove a negative prediction, i.e., that its State regulation would not impose an undue burden on interstate commerce.

These changes have been incorporated within the new rules proposed today. Procedures are prescribed for States to petition for a rule that a State energy efficiency standard or other requirement not be preempted; and or any person subject to such regulations to petition for a rule to preempt a State's standards. New informational submission requirements are proposed for petitioners in order to permit the Secretary to make the determinations required under the Act.

Small Business Exemptions

Pursuant to Section 325(a) of the Act, DOE today is proposing a new Subpart E to establish procedures by which manufacturers, whose annual gross revenues for the preceding 12-month period do not exceed $8,000,000, may petition DOE to be temporarily exempt from the standards. The exemption may be granted for a period of up to 24 months from the date such rule is prescribed for all or part of the energy efficiency standards. In establishing eligibility for the exemption, the annual gross revenues of any person who controls, is controlled by, or is under the common control with the petitioning manufacturer, are to be taken into account. Applications shall be submitted to the Secretary within 60 days from the date the standard was prescribed for which an exemption is sought. All firms affected by the same standard are required to file at the same time in order to enable the Secretary to make the requisite determination concerning competitive effects in the industry.

The purpose of this subpart is to enable manufacturers who could not comply with the standards to continue operations for a period of up to two years.

Section 430.54 details the relevant information which must be provided to DOE to permit the Secretary to make the determinations required under the Act. The necessary relevant information includes: annual financial statements; profit and loss statements; and balance sheets; annual gross dollar income resulting from the manufacture and sale of the covered product; estimates of the total costs and schedule necessary to comply with the applicable standard; a list of products manufactured by applicant and dollar volume of sales for each type or class of covered product; a list of principal manufacturers of the covered product and their respective market shares; evidence that applicant would be at an operational or financial disadvantage vis-a-vis other manufacturers; a description of applicant's efforts to comply with the standard; and a statement whether, at the end of the exemption period, applicant will be able to comply with the standard.

Section 430.55 outlines the steps applicant must take in filing the application, and the requirement that applicant is to notify all known manufacturers of domestically marketed units of similar product type of the application for exemption.

Sections 430.56 through 430.58 specify the procedures to be followed by DOE in granting or denying an exemption. The written views of the Attorney General shall be obtained prior to a finding by the Secretary that a failure to allow an exemption would likely result in a lessening of competition. Such a finding is required for each exemption granted. The decision reached by DOE and the reasons therefor are to be published in the Federal Register.

9. Environmental Assessment

In accordance with its obligations under the National Environmental Policy Act (NEPA) (42 U.S.C. 4321, *et seq.*) and the Council on Environmental Quality regulations implementing the procedural provisions of NEPA (40 CFR 1500–1508), DOE stated in the advance notice that it would prepare an Environmental Assessment on the impact of setting energy efficiency standards for the affected product types covered by this proposed rule. Subsequent to publication of the advance notice, other advance notices were published indicating that DOE is planning to develop energy efficiency standards for dishwashers, television sets, clothes washers humidifiers and dehumidifiers, and central air conditioners (heat pumps). In order to produce a comprehensive impact statement on all energy efficiency standards, thereby averting segmentation, the Environmental Assessment being made available for public comment at this time addresses the potential environmental impacts of all 13 consumer products.

The analyses indicated that air pollution and commitments of land and energy resources will decrease as a result of reducing future energy demand through the proposed standards. For example, emissions of sulfur oxides are projected to be reduced by up to 1.1 $\times 10^6$ tons per year and oxides of nitrogen by up to 423,000 tons per year; commitments of land to coal development will be reduced by as much as 6,000 acres per year; and production of solid waste will be reduced by 3.0 to 5.5 $\times 10^6$ tons per year of fly ash and .75 to 1.36 $\times 10^6$ tons per year of bottom ash.

Indoor air quality was found to be not significantly affected by implementation of standards. The exact effect could not be measured because the design options that will be selected by manufacturers for improving the efficiency of gas-burning products could not be ascertained. The program was found to have no significant effect on water quality, noise or air pollution levels.

An increase in the use of chlorofluorocarbons was projected, but this increase was found to be less than 4% of total U.S. production. Projected increases in the use of copper, steel, iron, aluminum, plastic and fiberglass were not considered to be significant when compared to total U.S. production. In addition, it was found that money saved from lower operating costs would be likely to be spent on goods and services in the general economy and therefore might stimulate additional

pollution which would not have occurred without the program. This amount was estimated to have no significant effect on future environmental quality.

The Environmental Assessment also summarizes the socioeconomic impacts of the program in a number of areas: change in the life cycle costs for consumers; the differential impact of the program on various income groups; change in the profitability to manufacturers of consumer products; the value of the program to the Nation as a whole and to various regions of the country; and secondary effects of the program on the national economy, including effects on employment, inflation, gross national product, and balance of trade. These socioeconomic impacts are more fully treated in the "Economic Analysis Document," TSD No. 4

Alternatives to the energy efficiency standards as proposed were assessed from the perspective of environmental impact. None of the alternatives analyzed was found to significantly affect the environment. The proposed action was found to benefit the environment to a greater degree than most alternatives considered. Those alternatives expected to benefit the environment to a greater degree than the proposed action were not selected for economic reasons.

Based on its evaluation of the Environmental Assessment, DOE has reached a finding of no significant impact regarding energy efficiency standards for consumer products, and therefore no environmental impact statement is required. The "Environmental Assessment," TSD No. 2 is available upon request, as indicated at the beginning of this notice.

410. Regulatory Analysis

Executive Order 12044, "Improving Government Regulations" (43 FR 12661, March 14, 1978), directs that all Federal regulations achieve their intended goals without imposing unnecessary burdens on the economy, on individuals, on public or private organizations, or on State and local governments. To this end, a Regulatory Analysis is prepared for significant major regulations. Such an analysis presents major alternatives to the regulation, examines the economic and administrative effects arising from each alternative and explains why one alternative was selected over the others.

DOE has determined that this proposed rule is significant and is likely to have a major impact on residential energy consumption and on manufacturers of consumer products. Accordingly, a Draft Regulatory Analysis has been prepared.

The Regulatory Analysis is summarized below. This summary focuses on the major alternatives considered in arriving at the proposed approach to improving the energy efficiency of consumer products. The reader is referred to the complete draft "Regulatory Analysis," TSD No. 1, which will be available for public comment as indicated at the beginning of this notice. It consists of: (1) a statement of the problem addressed by this regulation, and the mandate for government action; (2) a description and analysis of the feasible policy alternatives to this regulation; (3) a quantitative comparison of the impacts of the alternatives; (4) the economic impact of the proposed standard; (5) an analysis of urban and community impacts; and (6) other regulations and programs that might be affected by this regulation.

10.1 Major Alternatives

10.1.1 Alternatives for Achieving Consumer Product Energy Efficiency

Six major alternatives were identified by DOE as representing feasible policy alternatives for achieving consumer product energy efficiency. These alternatives include:

- No Regulatory Action
- Informational Action
  —Product labeling
  —Consumer education
- Prescriptive Standards
- Financial Incentives
  —Tax credits
  —Rebates
- Voluntary Energy Efficiency Targets
- The Proposed Approach (Performance Standards)

Each alternative has been evaluated in terms of its ability to achieve significant energy savings at reasonable costs, and has been compared to the effectiveness of the proposed regulation.

If "no regulatory action" were taken, then no standards would be implemented for any of the covered products. In this case, some energy savings would occur due to other government actions such as the consumer product labeling program, Building Energy Performance Standards, DOE's public education and information program, State standards, and the deregulation of energy prices.

Several alternatives to this regulation can be grouped under the heading of informational action. They include consumer product labeling and DOE's public education and information program. Both of these alternatives are mandated by the Act, and are currently underway. Consumer product standards, labeling, and consumer education were designed by Congress to act together to promote energy conservation in the residential sector. DOE has determined that neither the labeling nor the public education and information alternatives could stand alone and even approach the expected savings attributable to consumer product efficiency standards.

Prescriptive standards (i.e., intermittent ignition devices, flue dampers) would also fail to achieve the effectiveness of the proposed performance standards. In order for DOE to prescribe standards that could duplicate the projected energy savings under the proposed regulation, DOE would essentially have to specify designs of the thousands of models of consumer products produced. The time and costs involved with doing this would be prohibitive, and the results would tend to stifle competition in the industry.

Another method of prescribing standards would entail requiring that certain design options be used on each product. The effect of this alternative would be to lower energy savings while increasing the cost of regulation and decreasing competition in the industry.

Financial incentives are another group of alternatives that have been considered. They include tax credits, rebates, low interest financing and loan guarantees. Rebates for the purchase of more efficient consumer products were found to have costs which could significantly outweigh benefits. This alternative, although potentially beneficial to consumers, would provide limited incentives to manufacturers for the production of more efficient products. The length of time over which the rebate would be extended was also a factor in rejecting this alternative. A long-term program could be very costly, while a short-term program may not achieve lasting benefits.

The alternative of providing tax incentives for purchasing or manufacturing energy efficient products was also considered by DOE. Many of the same problems that were anticipated in the rebate alternative were also pertinent to this alternative. In both programs, the majority of the associated costs would be borne by the Federal government, i.e., distributed among all taxpayers, while the benefits would be derived only by the purchasers of covered products. Thus, on an individual consumer basis, the costs would outweigh the benefits for those taxpayers who do not purchase the covered products.

Several other financial incentives designed to stimulate the purchase or production of energy efficient products

were considered by DOE. Concepts such as providing low interest financing through utility companies for purchase of energy efficient products or low interest loans to low income groups who might have more difficulty in purchasing the higher priced energy efficient products. Such concepts were not considered to provide viable alternatives to the proposed approach in that they could not reasonably achieve the same energy savings that would accrue under the proposed approach.

EPCA called for industry to set up voluntary energy efficiency targets for the covered products. In amending the Act (NECPA) (Pub. L. 95–619), Congress specifically changed this section of the legislation to provide for immediate establishment of mandatory Federal standards. Therefore, voluntary standards are no longer a viable alternative for consideration.

Under the proposed approach, the energy efficiency standards are performance standards. The standards will establish the minimum energy efficiency level (MEEL) required to be achieved by each product type, but will not prescribe the means by which that level is to be reached. The levels are specified by energy factors which relate to the energy efficiency of the particular product type. The MEELs vary from product to product, depending upon their design limitations.

Expected Impacts of Program Alternatives

In Table 10.1–1, each of the program alternatives are evaluated in terms of their expected energy savings, costs, feasibility and national net present value. As the comparison shows, the proposed approach results in appreciably higher energy savings and a greater national net present value than any of the alternatives.

10.1.2 Alternatives Available Within the Proposed Approach. Within the legal framework of the Act there are several alternatives available to DOE in setting performance standards. These include various national regulatory levels, regional regulatory levels for certain consumer product types and alternative phase-in periods.

In determining the standard levels selected for this proposed regulation, a process to identify the standard level offering the maximum potential benefits was developed. This process considered the following options:

- Four alternative regulatory levels for 1981 standards and four alternative regulatory levels for 1986 standards;
- Regional standards for consumer products exhibiting significant climatological use differences; and
- No regulation (in cases where none of the above standards is economically feasible).

BILLING CODE 6450-01-M

Table 10.1-1. Expected Impacts of Program Alternatives

Alternative \ Impacts	National Energy Policy: Energy Use (QBtu's)	National Energy Policy: Energy Savings (QBtu's)	Net Present Value for Fuel and Equipment (in billions) (in 1978 $s)	Equity Impacts*	Legislative Authority	Major Barriers to Implementation/ Enforcement	Competition	Compliance and Reporting Requirements**
No action	436.3 to 460.4	0	None	Inequities between states due to nonuniform standards	***	None	None	None
Tax Credits (Consumers)	435.9 to 460.2	.4 to .2	$ .48 to $ .98	Some costs will be borne by all taxpayers regardless of purchase of energy efficient product	No	None, other than legislative	May favor large manufacturers	Could be unwieldy
Tax Credits (Manufacturers)	433.7 to 456.7	2.6 to 3.7	$ .39 to $ .79	"	No	Enforcement problems likely	"	"
Rebates (Consumers)	435.7 to 460.0	.6 to .4	$ .80 to $1.64	"	No	Potential difficulties in administration	"	"
Prescriptive Standards	428.2 to 444.9	8.0 to 15.5	$ 9.24 to $12.13	None	No	Restricts development of innovative technology	May reduce number of models and competition	Minimal reporting but extensive testing
Voluntary Energy Efficiency Targets: 5-yr. delay	429.8 to 445.9	6.5 to 14.5	$ 5.45 to $ 8.36	None	No	No assurance that participation will be widespread	None	None
Voluntary Energy Efficiency Targets: 10-yr. delay	433.8 to 453.6	2.4 to 6.8	$ 1.45 to $ 2.79					
Enhanced Labeling and Consumer Education	434.2 to 457.7	2.2 to 2.7	$ 3.28 to $ 3.52	None	Yes	None	None	Minimal
Performance Standards	422.6 to 435.5	13.6 to 24.9	$15.27 to $19.27	None	Yes	None	Not anti-competitive	Reasonable

Key: None = 0, or not significant

QBtu's = 10^{15} Btu's of energy or one quadrillion Btu's

NOTES: * Economic well-being of Nation as a whole.
** Interpreted to apply only to regulatory programs, not as a measure of effectiveness.
*** Yes, if no standard is justified.

BILLING CODE 6450-01-C

Alternative Levels

The trial levels for analysis in the formulation of 1981 standards were defined separately for all product classes. For each such class a sales weighted average efficiency factor (SWEF) for 1978 was determined from survey data. This SWEF defined the second level of analysis for each class. The first level of analysis was determined by subtracting the 1978 standard deviation of efficiency from the SWEF. Levels three and four were determined respectively by adding one and two standard deviations to the SWEF.

The four candidate levels analyzed in the formulation of product class specific standards for 1986 were derived as follows:

- level four was based on implementation of advanced technologies.
- level three was near the maximum product class efficiency factor considered to be attainable through conventional technologies (manufacturing processes currently applied on a wide scale).
- level two and one were derived by scaling down level three. This scaling down represented DOE's judgement regarding alternative burdens on manufacturers and was taken to provide a lower bound for choosing the preferred alternative.

Regional Standards

A major option in determining the format of the energy efficiency standards considered by DOE was the possibility of setting regional standards, as opposed to nationally uniform standards, for all covered products. The concept of regional standards was rejected for all covered products except for central air conditioners, room air conditioners and furnaces, where the use of the product is highly dependent on the climatic zone in which it is operated.

Based on analysis of the national proposed levels, DOE determined that regional standards were not feasible because of potential impact on manufacturers and consumers. However, as the national standards are lowered, the benefit of regional standards increases. The analysis of regional standards was based on three climatic regions, and considered standard levels 2, 3 and 4.

The results illustrate that for the products studied, and given sufficiently low national standards, regional standards (as opposed to a single national standard) could yield appreciable reductions in energy consumption in light of their potential impacts on manufacturers and product prices. The relative magnitudes of impacts associated with regional standards (the percentage reductions in consumption and cost) for each product are presented in Table 10.1–2.

Table 10.1–2.—*Regional Standards Energy Consumption*

Product	Reductions in energy consumption (percent)
Room air conditioners	5.0
Central air conditioners	3.7
Gas furnaces	1.0
Oil furnaces	Less than 1.0

An examination of these savings indicates the largest energy and cost savings occur for room and central conditioners. Even in these cases, the annual reduction in energy consumption does not exceed 5%. For oil and gas furnaces, both consumption and cost savings are shown to be much less.

The reduction in energy consumption and energy cost detailed in this section are part of the "benefit" portion of a cost/benefit analysis for regional standards implementation.

Costs associated with regional standards include increased manufacturing and distribution costs, substantially higher certification and enforcement costs and higher purchase prices to consumers. Quantitative data on these types of costs are generally not available and where available are fragmentary at best. Analysis indicated that equipment cost increases greater than approximately 4% for central air conditioners, 20% for room air conditioners, and 12% for furnaces would negate the fuel cost savings of regional standards. Further discussion on this subject can be found in the "Regulatory Analysis" and the "Economic Analysis Document."

Alternative Phase-In Periods

Section 325(c) of the Act allows for the phasing-in of standards over a period of up to 5 years through the establishment of intermediate standards. Use of the full 5-year period would provide manufacturers with the greatest possible planning and development time allowing them maximum flexibility in meeting final standards. Accordingly, DOE plans to utilize the full phase-in period and has proposed final standards which are to be achieved by January 1986. To assure that manufacturers make steady progress toward the 1986 standards, intermediate standards are proposed, to be effective no earlier than July 1981, 180 days after the final rule is prescribed. These intermediate standards take into account the short lead time manufacturers will have to make design changes.

10.2 Economic Impact of the Proposed Standards

The proposed consumer product efficiency standards will result in impacts on both consumers and manufacturers of the products. In addition, there will be national economic impacts. Potential economic impacts on consumers are: 1) higher purchase price, and 2) lower energy cost of operation. Manufacturers will probably experience: 1) retooling and equipment costs, 2) changes to sales volume, and 3) changes to sales revenue. Potential national impacts include: 1) changes in gross national product, 2) changes in energy consumption, and 3) changes in income distribution and employment.

The economic analyses performed in support of the proposed standards focused on studying the above impacts for each covered product. For each product, the economic impact of serveral potential standards were evaluated. Four levels were evaluated for 1981 standards, and three of four levels were evaluated for 1986 standards. The complete economic analysis is presented in the "Economic Analysis Document" TSD No. 4.

10.2.1 Effects of the Proposed Standards on Consumers. The major impact of the proposed standards on consumers will be an increase in the purchase price of consumer products and a decrease in the cost of product operation.

The gross consumer benefit accruing from regulation is defined as the net savings accruing to the consumer as a result of reduced product life cycle costs.

In every case, the proposed standard results in life cycle cost savings to the consumer. The benefits to the average consumer are expected to range from $6 in 1978 dollars for gas clothes dryers to $624 in 1978 dollars for gas, indoor boiler furnaces for the selected regulatory levels.

The distribution of impacts of the regulation among consumers of varying income levels was also examined. The analysis indicates that the proposed standards will have a small but positive differential impact on lower income groups.

10.2.2 Effects of the Proposed Standards on Manufacturers

The proposed standards will result in changes to manufacturers' costs, sales,

profits and financial position. These impacts were analyzed by examining manufacturer requirements, financing alternatives and shipment levels for the proposed standards and in the absence of regulation. Profit to net worth ratio and the ability of firms to finance capital costs of compliance were the key impact measures used to evaluate standards.

Firms will require additional capital equipment, tooling, etc., in order to produce products in compliance with the standards. This will force an increase in asset levels. However, these assets will be partially or wholly financed by increases in short- and long-term debt. The debt burden will fall more heavily on smaller firms; moreover, their ability to finance without incurring debt is less than it would be for larger firms. However, the Small Business Exemptions proposed today in Subpart E are expected to lessen the impacts on smaller firms.

Manufacturer impacts vary by size of firm and by products produced. For a more detailed discussion of manufacturer impacts, see section 4 of this notice and the draft "Economic Analysis Document," TSD No. 4.

10.2.3 Effects of the Proposed Standards on the National Economy. Key indicators of the impact of consumer product efficiency standards on the national economy are measured by total energy savings and national net present value. The national net present value of the proposed standards on all product types combined is estimated to be between $15.2 billion and $19.3 billion over the time period 1982–2005. Total energy savings from the program will range between 13.8 QBtu and 25.2 QBtu.

The proposed regulations will also have a positive impact on the gross national product (GNP). The GNP is expected to rise by $0.6 billion in 1986, by $2.5 billion in 1990, by $4.6 billion in 1995, and by $5.3 billion in 2000 as a result of the program. In addition, no inflationary impacts are expected in that the GNP deflator shows either no change or negative change. The incremental change in the U.S. balance of trade will be $0.3 billion in 1986, $1.2 billion in 1990, $2.5 billion in 1995, and $1.7 billion in 2000.

The production of energy efficient products will result in increased employment in the industry. Some jobs will be created to develop, design and produce energy efficient products. Employment will also rise as increases in disposable income, resulting from fuel cost savings, are spent on other goods and services. By 1986, the proposed regulations are expected to increase employment in all industries by 30,000 jobs. The increase is expected to rise to 110,000 jobs by 1990, to 190,000 in 1995 and to 220,000 in 2000.

10.2.4 Effects of Certification and Enforcement Costs. The certification and enforcement costs for the program are expected to be a small percentage of the total cost of the product. Using the worst case scenario where the anticipated number of certification tests is maximized, the costs range from 0.02% of the value of shipments for refrigerators and refrigerator-freezers and 0.58% for central air conditioners (cooling only) for the first year. In subsequent years, the costs will decrease in that only a limited number of carry-over models will be required to be retested. The certification and enforcement costs include certification test costs, the cost to manufacturers when DOE conducts enforcement audits and administrative costs. Further discussion of the impacts of certification and enforcement can be found in section 6 of this preamble and the "Certification and Enforcement Document," TSD No. 3.

10.3 Urban and Community Impact Analysis

In accordance with Presidential Executive Order 12044, an "Urban and Community Impact Analysis" is required in order to assess the probable effects of proposed agency initiatives on central cities, suburban communities, and non-metropolitan areas. In complying with this mandate for the proposed energy efficiency standards for products, it should be noted that there is only a limited amount of data available on the geographic distribution of consumer product plant locations and the number of employees per plant. Moreover, in the absence of a survey of each manufacturer, there is no data base that could be researched to determine the composition of the work force at each plant. However, there is information available that broadly indicates the current employment picture on a national and statewide basis and the changes that have occurred during the 1970's.

The conclusions reached in the Regulatory Analysis indicate that it is apparent that employment shifts in the consumer product industry have occurred in recent years due to a variety of market factors. Accordingly, it is not believed that energy efficiency standards will have any noticeable impact on either exacerbating or mitigating this trend since many other factors are far more significant in causing plant shutdown or relocations from older manufacturing areas. However, the imposition of the standards may have a minimal secondary effect (which may not be readily identifiable) by increasing costs to financially weak firms that may then become acquisition targets with a resulting shift of facilities and employment.

The economic analysis of the impacts of the proposed standards on manufacturers indicates that employment will increase as a result of the proposed standards. Some employment increases will occur in the consumer product manufacturing industry. Additional employment increases will occur in other industries as a result of the increased disposable income available to purchasers of the regulated consumer products to spend on additional goods and services.

While these employment increases may counteract the downward employment trends in the consumer product industry, the proposed regulations are unlikely to affect shifts of plant locations away from the northeastern region of the United States.

The effect of the proposed regulation on various income groups within the population was examined in the economic analysis. No adverse impacts on low income or minority groups were identified.

The distribution of impacts of the regulation among various regions of the U.S. was also examined in the economic analysis. No one region of the nation is expected to be impacted more severely than another.

In the summary, the overall impact of the regulation on cities, suburban communities, and non-metropolitan areas is expected to be beneficial in that demand for energy will be reduced without lowering the utility provided by the covered products. In addition, this reduced demand may serve to mitigate possible future energy shortages, such as brownouts, in urban areas. Reduced demand could serve to keep energy prices lower than may have been possible without the proposed regulations.

10.4 Significant Conservation of Energy

Section 325(b) requires, among other things, that no standard can be prescribed for a product type or class if the standards do not result in significant conservation of energy. When energy conservation was analyzed, it was found that certain classes of products only had design options that would result in marginal conservation. DOE reviewed the provisions of the Act and determined for purposes of this notice that significant conservation of energy is:

• Product type—energy conservation must exceed 840 million kilowatt hours (2.867×10^{12} Btu) per year; and

• Product class—energy conservation must exceed 30 kilowatt hours (102,390 Btu/product/year/unit.

These levels are based upon applying the 20% efficiency improvement specified in Section 325(a)(1)(B) of EPCA as the minimum improvement and the criteria specified in 325(a)(2) of the Act for determining whether a standard should be set for a category 14 product. More specifically the aggregate household energy use of all products within a type or class must exceed 4.2×10^9 kilowatt hours per year and average per household kilowatt hours per year.

For further details on the specific methodology for determining significant conservation of energy the reader is referred to the "Economic Analysis Document," TSD No. 4.

10.5 Summary

The adoption and implementation of the proposed standards, supplemented by labeling and educational programs, represent a balanced mix of actions that will achieve notable energy savings. The principal advantages over other alternatives can be briefly summarized:

• The use of national and uniform performance standards will enable manufacturers to design innovative approaches that will yield increased cost benefits to consumers.

• In emphasizing life cycle costing, consumers will be able to make more rational product purchase decisions that will result in long term energy and cost savings.

• The costs to government will be minimized and the competitive nature of the consumer product marketplace will be essentially maintained in that consumers will have a range of product for selection purposes.

• The proposed approach results in greater net present value and energy savings than any other approach considered.

11. Public Comment Procedure

11.1 Participation in Rulemaking

Because of the direct impact of the standards on individual consumers, DOE wishes to achieve in the standards development process the maximum level of consumer participation possible. Following publication of the advance notice related to the forthcoming energy efficiency standards, DOE held a total of seven public meetings to acquaint the public with the issues relating to the standards and invited public participation in the rulemaking process. The Department encourages consumers and manufacturers to attend a public meeting that will be held in Washington, D.C., at the time and place indicated at the beginning of this notice, to present questions, if necessary, to clarify the information presented in this notice. The Department also encourages attendance at the public hearings to be held in Washington, D.C., and Chicago, Illinois at the times and places indicated at the beginning of this notice.

Representatives of consumer groups, manufacturers' associations, individual consumers, manufacturers and other interested parties are also urged to submit written statements regarding the standards program during the 60 day written comment period following publication of this notice.

11.2 Comments on Issues

Issues and questions relating to the development of standards are found throughout this notice. The following list of issues, while highlighting some of the major areas of interest to DOE, is not intended to be comprehensive and should not be construed as limiting the scope of comments relating to the notice.

1. DOE intends to phase in standards over a five-year period as described in this notice, with the final standards becoming effective in January 1, 1986 and with intermediate standards becoming effective in July 15, 1981. DOE is interested in comments relating to the appropriateness of this schedule.

2. DOE has indentified the product types and classes to which standards are to apply. Product classes were selected based on three criteria. First, product types were divided by the type of energy (electricity, gas, oil) the product consumed; second, groupings were established within energy types by taking into account utility and performance-related features; and third, these groupings formed the basis for product classes only when it was determined their energy efficiency was inherently different from similar groupings without the performance-related features. No separate class was established if the product grouping with the performance-related features could meet the same energy efficiency standard as the product grouping without the performance-related features. DOE would like to receive comments pertaining to the proposed classes. If additional classes are recommended, the recommendations should include the rationale for the establishment of such classes based on the three class selection criteria discussed in section 1.3.2. of this notice.

3. For purposes of this notice, DOE has defined "maximum technologically feasible energy efficiency level" in section 2 of this notice. DOE invites comments on this definition and on the efficiency levels.

4. DOE's approach to the development of an energy efficiency standard certification and enforcement program has been discussed in section 6. DOE is particularly interested in receiving comments on the following aspects of the approach:

(a) Information on the impacts of the proposed sampling plan relating to the certification and the enforcement aspects of the rule and whether the testing of four units is a sufficient sample size to reach a compliance or non-compliance determination;

(b) Information on the data reporting and recording requirements for manufacturers and private labelers. Such information should be provided in terms of estimates of the time in manhours necessary to complete each data form and the associated cost. (Whenever an element is presently being recorded by a manufacturer or private labeler as part of its own record retention or reporting procedurers, the manhour and cost estimates for recording and reporting the data requirement should reflect only the manhours and cost associated with the transcription and submittal of the data to DOE);

5. Congress identified seven factors which must be considered to the extent practicable in determining the economic justification of a standard. In section 1, DOE has listed these factors. DOE is interested in comments relating to the analysis conducted pursuant to these factors.

6. DOE has proposed energy efficiency standards for classes of refrigerators and refrigerator-freezers, freezers, clothes dryers, kitchen ranges and ovens, and water heaters that are functions of volume. The basis for the selection of these functional relationships are explained in section 4. DOE would like to receive comments on the analyses.

7. DOE is interested in receiving specific comments on the potential adverse impact of this rule on small businesses and adequacy of the small business exemption provisions provided in the rule, and (a) whether the Act's exemption for businesses with $8,000,000 in gross revenues is adequate to mitigate any adverse impact of the rule on small manufacturers, especially in view of inflation and (b) what, if any, modification of that provision would be desirable.

11.3 Comment Procedures

Interested persons are invited to participate in this proceeding by submitting, to the address indicated at the beginning of this notice, data, views or arguments with respect to the subjects set forth in this notice. It is requested that comments for each product type be addressed separately and that comments regarding the certification and enforcement provisions be addressed separate from the product specific comments.

Comments should be labeled both on the envelope and on the documents, "Energy Efficiency Standards for Consumer Products, (Docket No. CAS-RM-78-110)." Fifteen copies are requested to be submitted, but this is not a requirement for submitting comments.

Pursuant to the provisions of 10 CFR 1004.11, any person, submitting information or data which is believed to be confidential and exempt by law from public disclosure, should submit one complete copy, and fifteen copies from which the information believed to be confidential has been deleted.

Factors of interest to DOE when evaluating requests to treat as confidential information that has been submitted include: (1) a description of the item; (2) an indication as to whether and why such items of information have been treated by the submitting party as confidential, and whether and why such items are customarily treated as confidential within the industry; (3) whether the information is generally known or available from other sources; (4) whether the information has previously been made available to others without obligation concerning its confidentiality; (5) an explanation of the competitive injury to the submitting person which would result from public disclosure; and (6) an indication as to when such information might lose its confidential character due to the passage of time. In accordance with the procedures established at 10 CFR 1004.11, DOE shall make its own determination with regard to any claim that information submitted be exempt from public disclosure.

Any comments received before the close of the comment period as specified at the beginning of this notice will be considered by DOE in developing the final standards. The comment period will extend over a period of 60 days as required by applicable law and regulation.

11.4 Oral Presentation: Conduct of Meeting

The purpose of the public meeting is to provide interested persons an opportunity to become more familiar with this notice. Interested parties may present written questions regarding this rule for the purpose of clarification of issues. Written questions must be submitted to DOE by the date specified at the beginning of this notice and should be labeled both on the document and the envelope, "Energy Efficiency Standards for Consumer Products (Docket No. CAS-RM-78-110)" and should be sent to the address indicated at the beginning of this notice. Persons attending this meeting will also have an opportunity to question those persons making written or oral presentations with respect to disputed issues of material fact. Any futher procedural rules needed for the proper conduct of the meeting will be announced by the presiding officer.

A transcript of the meeting will be made, the entire record of the meeting including the transcript, and the written responses to questions, will be retained by DOE and made available for inspection at the DOE Freedom of Information Office in the Forrestal Building, 1000 Independence Avenue SW., Washington, D.C. 20585, between the hours of 8:00 a.m. and 4:30 p.m., Monday through Friday. Any person may purchase a copy of the transcript from the transcribing reporter.

11.5 Oral Presentation: Conduct of Hearings

Any person who has an interest in these proceedings, or who is a representative of a group of persons having an interest, may make a written request for an opportunity to make an oral presentation at the public hearings. Such requests should be labeled both on the document and on the envelope, "Energy Efficiency Standards for Consumer Products, (Docket No. CAS-RM-78-110)" and should be sent to the address indicated at the beginning of this notice, by the time specified.

The person making the request should briefly describe the interest concerned, and if appropriate, state why he or she is a proper representative of the group that has an interest, and give a phone number where he or she may be contacted. Each person selected to be heard will be so notified by DOE by the date specified at the beginning of this notice.

Each person selected to be heard must submit fifteen copies of his statement by the date given at the beginning of this notice. In the event any persons wishing to testify cannot meet this requirement, alternative arrangements can be made with the Office of Hearings and Dockets in advance by so indicating in the letter requesting to make an oral presentation.

DOE reserves the right to select the persons to be heard at these hearings, to schedule the respective presentations, and to establish the procedures governing the conduct of the hearings. The length of each presentation may be limited, due to the number of persons requesting to be heard. The official conducting the hearing will accept additional comments or questions from those attending, as time permits.

The hearings will not be judicial or evidentiary-type hearings, but will be conducted in accordance with section 553 of title 5, United States Code. Except during those periods when comments or questions are requested from the floor, questions will be asked only by the persons conducting the hearing. Any further procedural rules needed for the proper conduct of the hearing will be announced by the presiding officer.

A transcript of the hearings will be made, and the entire record of the hearings including the transcript, will be retained by DOE and made available for inspection at the DOE Freedom of Information Office in the Forrestal Building, 1000 Independence Avenue SW., Washington, D.C. 20585 between the hours of 8:00 a.m. and 4:30 p.m., Monday through Friday. Any person may purchase a copy of the transcript from the transcribing reporter.

In consideration of the foregoing, it is proposed to amend Part 430 of Chapter II of Title 10, Code of Federal Regulations, as set forth below.

Issued in Washington, D.C.

Dated: June 19, 1980.

John C. Sawhill,

Deputy Secretary.

1. Section 430.1 is revised to read as follows:

§ 430.1 Purpose and scope.

This part establishes the regulations for the implementation of Part B of Title III (42 U.S.C. 6291-6309) of the Energy Policy and Conservation Act (Pub. L. 94-163), as amended by Pub. L. 94-385 and Pub. L. 95-619, which establishes an energy conservation program for consumer products other than automobiles.

2. Section 430.2 is amended by deleting the present definitions of "Act," "Administrator," and "Basic Model with respect to subparagraphs (5), (6), and (14)" and inserting the following items in alphabetical order:

§ 430.2 Definitions.

* * * * *

"Act" means the Energy Policy and Conservation Act (Pub. L. 94-163), as

amended by the National Energy Conservation Policy Act (Pub. L. 95-619).

* * * * *

"Basic model"

(5) With respect to water heaters, which have the same primary energy source and which do not have any differing electrical, physical, or functional characteristics that affect energy consumption.

(6) With respect to room air conditioners, which have electrical characteristics that are essentially identical and which do not have any differing physical or functional characteristics that affect energy consumption.

* * * * *

(14) With respect to furnaces, which have the same primary energy source, which have electrical characteristics that are essentially identical, and which do not have any differing physical or functional characteristics that affect energy consumption.

* * * * *

"Batch" means a collection of production units of a basic model from which a batch sample is selected.

"Batch sample" means the collection of units of the same basic model from which test units are selected.

"Batch sample size" means the number of units in a batch sample.

"Batch size" means the number of units in a batch.

* * * * *

"Commerce" means trade, traffic, commerce, or transportation:

(a) between a place in a State and any place outside thereof, or

(b) which affects trade, traffic, commerce, or transportation described in subparagraph (a).

* * * * *

"Consumer product" means any article (other than an automobile, as defined in section 501(1) of the Motor Vehicle Information and Cost Savings Act) of a type:

(a) which in operation consumes, or is designed to consume, energy; and

(b) which, to any significant extent, is distributed in commerce for personal use or consumption by individuals; without regard to whether such article of such type is in fact distributed in commerce for personal use or consumption by an individual.

* * * * *

"Covered product" means a consumer product of a type specified in section 322 of the Act.

* * * * *

"Distribute in commerce" and "distribution in commerce" mean to sell in commerce, to import, to introduce or deliver for introduction into commerce, or to hold for sale or distribution after introduction into commerce.

"Distributor" means a person (other than a manufacturer or retailer) to whom a consumer product is delivered or sold for purposes of distribution in commerce.

* * * * *

"Energy efficiency standard" means a performance standard:

(a) which prescribes a minimum level of energy efficiency for a covered product, determined in accordance with test procedures prescribed under section 323 of the Act, and

(b) which includes any other requirements which the Secretary may prescribe under section 325(j) of the Act.

* * * * *

"Horizontal furnace" means a furnace where the blower is located beside the heat exchanger with the air entering one end, traveling horizontally through the blower and over the heat exchanger and discharging out the opposite end.

* * * * *

"Manufacture" means to manufacture, produce, assemble or import.

"Manufacturer" means any person who manufacturers a consumer product.

* * * * *

"Model" means all units within the manufacturers classification of a product line with are identical with respect to consumer-discernible characteristics, except for serial number or similar identifying marks.

* * * * *

"New covered product" means a covered product the title of which has not passed to a purchaser who buys such product for purposes other than (a) reselling such product, or (b) leasing such product for a period in excess of one year.

"Nonweatherproof furnace" means a furnace that is not able to withstand exposure to weather without damage or loss of function.

* * * * *

"Operating hours" means:

(a) Where product storage areas or facilities are concerned, all times during which personnel other than custodial personnel are at work.

(b) Where facilities or areas other than those covered by subparagraph (a) are concerned, all times during which product manufacture or assembly is in operation or all times during which product testing or maintenance, production, or compilation of records is taking place, or any other procedure or activity related to testing, product manufacture or assembly is being performed.

* * * * *

"Outdoor side louvers" means a series of slotted or slitlike openings on the sides of the outside portion of a room air conditioner. Side louvers separate the air streams to and from the condenser and reduce recirculation of cooling air.

"Person" means (a) any individual, (b) any corporation, company, association, firm, partnership, society, trust, joint venture, or joint stock company, and (c) the government and any agency of the United States or any State or political subdivision thereof.

* * * * *

"Private labeler" means an owner of a brand or trademark on the label of a consumer product which bears a private label.

"Production unit" means an individual covered product which has been produced or assembled using the manufacturer's normal production processes for units to be distributed in commerce.

* * * * *

"Reasonable assistance" means providing timely and unobstructed access to facilities, products and records as required by this regulation and opportunity for copying such records or testing such test units.

* * * * *

"Retailer" means a person to whom a consumer product is delivered or sold, if such delivery or sale is for purposes of sale or distribution in commerce to purchasers who buy such product for purposes other than resale.

"Reverse cycle room air conditioner" means a room air conditioner which utilizes an indoor conditioning coil, compressor(s), and refrigerant-to-outdoor-air heat exchanger to provide air cooling, and which also provides air heating.

* * * * *

"State" means a State, the District of Columbia, Puerto Rico, or any territory or possession of the United States.

"State regulation" means a law or regulation of a State or political subdivision thereof.

* * * * *

"Test sample" means the collection of test units of the same basic model of a covered product used to determine compliance with an applicable energy efficiency standard, pursuant to the requirements of Subpart F.

"Test sample size" means the number of units in a test sample.

"Test unit" means a unit of any covered product selected for, and is the

subject of, any testing pursuant to the requirements of Subpart F.

* * * * *

(Part B, Title III, Energy Policy and Conservation Act, Pub. L. 94-163 (42 U.S.C. 6291-6309) as amended by Pub. L. 94-385 and Pub. L. 95-619)

3. Subpart C of Part 430 is revised to read as follows:

Subpart C—Energy Efficiency Standards

Sec.
430.31 Purpose and scope.
430.32 Intermediate and final energy efficiency standards.
430.33 General provisions.

Subpart C—Energy Efficiency Standards

Authority: Sec. 325, Energy Policy and Conservation Act, Pub. L. 94-163, as amended by Pub. L. 95-619 (42 U.S.C. 6295).

§ 430.31 Purpose and scope.

This subpart contains energy efficiency standards for classes of covered products that are required to be prescribed by the Department of Energy pursuant to Section 325(a) of the Act.

§ 430.32 Intermediate and final energy efficiency standards.

The intermediate and final energy efficiency standards for the classes of covered products set forth in paragraphs (a) through (n) of this section shall become effective July 15, 1981 and January 1, 1986, respectively.

(a) *Refrigerators and refrigerator-freezers.*

Product class	July 15, 1981	January 1, 1986
1. Electric refrigerator; manual defrost.	1.20 + 0.524V	11.04 + 0.474V
2. Electric refrigerator-freezer; manual defrost freezer.	0.06 + 0.400V	6.29 + 0.432V
3. Electric refrigerator-freezer; automatic defrost with top freezer.	1.69 + 0.178V	4.91 + 0.183V
4. Electric refrigerator-freezer; automatic defrost with side freezer.	3.19 + 0.09V	5.20 + 0.082V
5. Electric refrigerator-freezer; automatic defrost with bottom freezer.	4.5	8.1
6. Electric refrigerator-freezer; automatic defrost with top freezer and through-the-door ice or liquid service.	5.4	7.4
7. Electric refrigerator-freezer; automatic defrost with side freezer and through-the-door ice or liquid service.	4.7	6.3

V = Total unadjusted volume, expressed in ft.^{3}

(b) *Freezers.*

Product class	July 15, 1981	January 1, 1986
1. Chest freezer, manual defrost.	6.18 + 0.337V	13.72 + 0.332V
2. Upright freezer, manual defrost.	3.00 + 0.393V	10.85 + 0.342V
3. Upright freezer, automatic defrost.	3.30 + 0.197V	8.07 + 0.093V

V = Total unadjusted volume, expressed in ft.^{3}

(c) *Dishwashers.*

[Reserved]

(d) *Clothes Dryers.*

Product class	July 15, 1981	January 1, 1986
1. Electric, standard size	2.95 − 0.048V	3.31 − 0.048V
2. Electric, compact size, 120 Volts.	2.63	2.85
3. Electric, compact size, 240 Volts.	2.35	2.54
4. Gas	2.71 − 0.048V	2.91 − 0.048V

V = Drum volume, expressed in ft.^{3}

(e) *Water heaters.*

Product class	July 15, 1981	January 1, 1986
1. Electric	0.860 − 0.0013V	0.966 − 0.0013V
2. Gas	0.546 − 0.0018V	0.663 − 0.000625V
3. Oil	No Standard.	No Standard.

V = Storage volume, expressed in gallons.

(f) *Room air conditioners.*

Product class	July 15, 1981	January 1, 1986
1. With outdoor side louvers; capacity of 6,000 Btu/hr or less.	6.5	8.4
2. With outdoor side louvers; capacity greater than 6,000 Btu/hr but less than 20,000 Btu/hr.	7.5	9.5
3. Without outdoor side louvers; capacity of 20,000 Btu/hr or greater.	6.7	8.4
4. With outdoor side louvers; or reverse cycle.	6.7	9.0

(g) *Home heating equipment not including furnances.*

[Reserved]

(h) *Television sets.*

[Reserved]

(i) *Kitchen ranges and ovens.*

Product class	July 15, 1981	January 1, 1986
1. Microwave oven	No standard.	No standard.
2. Electric cooking top	No standard.	No standard.
3. Electric oven	17.6 − 1.57V	20.2 − 1.57V
4. Electric oven, self-cleaning	17.6 − 1.57V	18.3 − 1.57V
5. Gas cooking top	31	45
6. Gas oven	6.4 − 0.73V	9.2 − 0.73V
7. Gas oven, self-cleaning	7.2 − 0.73V	8.6 − 0.73V

V = Total oven volume, expressed in ft.^{3}

(j) *Clothes washers.*

[Reserved]

(k) *Humidifiers.*

[Reserved]

(l) *Dehumidifiers.*

[Reserved]

(m) *Central air conditioners.*

Product class	July 15, 1981	January 1, 1986
1. Split system—cooling only	7.8	11.0
2. Single package—cooling only.	7.5	10.5
3. Air source, split system, heat pump.	Space reserved.	
4. Air source, single package, heat pump.	Space reserved.	
5. Air source, split system, heating only heat pump.	Space reserved.	

(n) *Furnaces.*

Product class	July 15, 1981	January 1, 1986
1. Electric	No standard.	No standard.
2. Gas gravity	No standard.	No standard.
3. Gas, forced air, indoor	65	81
4. Gas, forced air, outdoor, nonweatherproof horizontal.	56	74
5. Gas, forced air, outdoor, other than nonweatherproof.	68	76
6. Gas boiler, indoor	65	79
7. Gas boiler, outdoor	No standard.	No standard.
8. Oil, forced air, indoor	75	80
9. Oil, forced air, outdoor	71	78
10. Oil boiler, indoor	76	82
11. Oil boiler, outdoor	No standard.	No standard.

4. Subpart D of Part 430 is revised to read as follows:

Subpart D—Petitions To Supersede State Regulation; Petition To Exempt State Regulation From Supersession

Sec.
430.40 Scope and purpose.
430.41 Prescriptions of a rule.
430.42 General filing requirements.
430.43 Filing of petitions.
430.44 Notice of petition.
430.45 Consolidation.
430.46 Hearing.
430.47 Disposition of petitions.
430.48 Request for reconsideration.
430.49 Finality of decision.

Subpart D—Petitions To Supersede State Regulation; Petitions To Exempt State Regulation From Supersession

Authority: Sec. 327(b), Energy Policy and Conservation Act, as amended by Pub. L. 95-619 (42 U.S.C. 6297(b)).

§ 430.40 Scope and purpose.

(a) The regulations in this subpart prescribe the policy and procedures to be followed in connection with petitions for prescription of a rule to supersede in whole or part a State regulation prescribing an energy efficiency standard or other requirement respecting energy use or energy efficiency of a type (or class) of covered products.

(b) The regulations in this subpart also prescribe the policy and procedures to be followed in connection with petitions for prescription of a rule that a State regulation prescribing an energy efficiency standard or other requirement respecting energy use or energy efficiency of a type (or class) of covered products not be superseded.

§ 430.41 Prescriptions of a rule.

(a) *Criteria for supersession.* Upon petition by any person subject to a State regulation prescribing an energy efficiency standard or other requirement for a type or class of a covered product, the Secretary may prescribe a rule superseding in whole or in part such regulation if he determines that there is no significant State or local interest sufficient to justify such State regulation and such State regulation unduly burdens interstate commerce.

(1) *Requirements of petition to supersede.* A petition to supersede a State regulation shall include the information prescribed in subparagraphs (i) through (xix) below and shall be available for public review, except for confidential or proprietary information submitted in accordance with the Department of Energy's Freedom of Information Regulations set forth in 10 CFR Part 1004:

(i) The name, address and telephone number of the petitioner;

(ii) A statement of the interest of the petitioner for which a superseding rule is sought;

(iii) A copy of the State regulation to which a superseding rule is sought;

(iv) Specification of each type or class of covered product for which a superseding rule is sought;

(v) An enumeration (or estimation) of the total number of covered products sold in the State for which a rule is sought compared to the total national market;

(vi) An enumeration (or estimation) of the number of basic models of the covered product that are above and below the State standard;

(vii) A list of the basic models that will be discontinued with their estimated impact on wholesalers, retailers and consumers, i.e., loss of revenues, loss of jobs, increasing costs, etc., if the State regulation is not superseded;

(viii) An analysis of the effect of complying with State regulations re:

(A) Labor and capital costs;

(B) Material costs;

(C) Transportation costs;

(D) Distribution, inventory and other associated costs; and

(E) Retooling and other modification costs;

(ix) An analysis of the investment capital necessary to comply with the State regulation for:

(A) The largest manufacturer of the product type to which the regulation applies,

(B) An average manufacturer, and

(C) An estimate of the number of manufacturers that cannot meet the capital investment requirments;

(x) An estimate of the number of covered products which would be purchased in the State for each of the next ten years from the date of the petition;

(xi) An estimate of the total energy demand in the State compared to the total national demand for each of the next ten years from the date of the petition;

(xii) An estimate of the total energy usage in the State of the covered product for each of the next ten years from the date of the petition;

(xiii) An estimate of:

(A) The aggregate, and

(B) The peak load amount of energy saved by a covered product through implementation of the State regulation over the Federal standard for each of the next ten years from the date of the petition.

(xiv) A comparison of the net present value of the energy saved by a covered product through implementation of:

(A) the State regulation, and

(B) the Federal standard to the increase in the retail cost of such covered product;

(xv) An estimate of the number of years of operation of the covered product necessary to recoup the estimated increase in the retail cost of such covered product;

(xvi) An environmental analysis prepared in accordance with the Department of Energy's regulations set forth in 10 CFR Part 208 to the maximum extent feasible and reasonable;

(xvii) An analysis of the usage patterns and the climate areas of the covered product;

(xviii) Other information, if any, believed to be pertinent by the petitioner; and,

(xix) Such other information as the Secretary may require.

(b) *Criteria for exemption from supersession.* Upon petition by a State which has by regulation prescribed an energy efficiency standard or other requirement for a type or class of a covered product for which a Federal energy efficiency standard is applicable the Secretary may prescribe a rule that such regulation not be superseded if he determines that there is a significant State or local interest to justify such State regulation and such State regulation contains a more stringent energy efficiency standard than such Federal standard, except that he may not prescribe such a rule if he finds that such State regulation would unduly burden interstate commerce.

(1) *Requirements of petition for exemption from supersession.* A petition from a State for a rule for exemption from supersession shall include the information prescribed in paragraphs (a)(1) (i) through (vii) and (x) through (xix) of this section. A petition for a rule and correspondence relating to such petition shall be available for public review except for confidential or proprietary information submitted in accordance with the Department of Energy's Freedom of Information Regulations set forth in 10 CFR Part 1004.

(c) All analyses of the effect of a State regulation shall include discussions of the basis of the analyses.

(d) A petition for a rule shall be submitted in triplicate to: The Secretary, U.S. Department of Energy, Section 327 Petitions, Energy Efficiency Standards for Consumer Products, 1000 Independence Avenue, S.W., Washington, D.C. 20585.

§ 430.42 General filing requirements.

(a) *Service.* All documents required to be served under this subpart shall, if mailed, be served by first class mail. Service upon a person's duly authorized representative shall constitute service upon that person.

(b) *Obligation to supply information.* A person or State submitting a petition is under a continuing obligation to provide any new or newly discovered information relevant to that petition. Such information includes, but is not limited to, information regarding any other petition or request for action subsequently submitted by that person or State.

(c) *The same or related matters.* A person or State submitting a petition or other request for action shall state whether to the best knowledge of that petitioner the same or related issue, act, or transaction has been or presently is being considered or investigated by DOE; by any other Federal or State agency, department, or instrumentality; or by a Federal or State court.

(d) *Computation of time.* (1) In computing any period of time prescribed by or allowed under this subpart, the day of the action from which the designated period of time begins to run is not to be included. If the last day of the period is Saturday, or Sunday, or Federal legal holiday, the period runs until the end of the next day that is neither a Saturday, Sunday, nor Federal legal holiday.

(2) Saturdays, Sundays, and intervening Federal legal holidays shall be excluded from the computation of time when the period of time allowed or prescribed is 7 days or less.

(3) When a submission is required to be made within a prescribed time, DOE may grant an extension of time upon good cause shown.

(4) Documents received after regular business hours are deemed to have been submitted on the next regular business day. Regular business hours for the DOE's National Office, Washington, D.C., are 8:30 a.m. to 4:30 p.m.

(5) DOE reserves the right to refuse to accept, and not to consider, untimely submissions.

§ 430.43 Filing of petitions.

(a)(1) A petition for a rule to supersede a State regulation, all supporting documents, and all future submissions shall be served on each State agency, department, or instrumentality whose regulation the petitioner seeks to supersede.

(2) A petition for a rule not to supersede a State standard, all supporting documents, and all future submissions shall be served on each manufacturer of a covered product who will or may be affected by the State law or regulation the petitioner seeks to sustain.

(3) The petition shall contain a certification of this service which states the name and mailing address of the served parties, and the date of service.

(b) A petition may be submitted on behalf of more than one person. A joint petition shall indicate each person participating in the submission. A joint petition shall provide the information required by § 430.41 for each person on whose behalf the petition is submitted.

(c) All petitions shall be signed by the person(s) submitting the petition or by a duly authorized representative. If submitted by a duly authorized representative, the petition shall certify this authorization.

(d) *Acceptance for filing.* (1) Within fifteen (15) days of the receipt of a petition by the Secretary, the Secretary will either accept it for filing or reject it, and the petitioner will be so notified in writing. The Secretary will serve a copy of this notification on each other party served by the petitioner with a copy of the petition. Only such petitions which conform to the requirements of this subpart and which contain sufficient information for the purposes of a substantive decision will be accepted for filing. Petitions which do not so conform will be rejected and an explanation provided to petitioner in writing.

(2) For purposes of the Act and this subpart, a petition is deemed to be filed on the date it is accepted for filing.

(e) *Docket.* A petition accepted for filing will be assigned an appropriate docket designation. Petitioner shall use the docket designation in all subsequent submissions.

§ 430.44 Notice of petition.

(a) Promptly after receipt of a petition and its acceptance for filing, notice of such petition shall be published in the Federal Register. The notice shall set forth the availability for public review of all data and information available, and shall solicit comments, data and information with respect to the determination of the petition. Except as may otherwise be specified, the period for public comment shall be 60 days after the notice appears in the Federal Register.

(b) In addition to the material required under paragraph (a) of this section, each notice shall contain a summary of the State regulation at issue and either (1) the petitioner's reasons for a rule to supersede the State regulation, or (2) the petitioner's reasons for a rule not to supersede the State regulation.

§ 430.45 Consolidation.

DOE may consolidate any or all matters at issue in two or more proceedings docketed where there exist common parties, common questions of fact and law, and where such consolidation would expedite or simplify consideration of the issues. Consolidation shall not affect the right of any party to raise issues that could have been raised if consolidation had not occurred.

§ 430.46 Hearing.

The Secretary may hold a public hearing, and publish notice in the Federal Register of the date and location of the hearing, when he determines that such a hearing is necessary and likely to result in a timely and effective resolution of the issues.

§ 430.47 Disposition of petitions.

(a) As soon as practicable after the submission of public comments under § 430.44(a), the Secretary shall issue a final rule. When practicable, the Secretary shall make his determination within 6 months after the date the petition is filed.

(b) The final rule issued by the Secretary shall include a written statement setting forth his findings and conclusions, and the reasons and basis therefor. A copy of the Secretary's decision shall be sent to either (1) the petitioner, the affected State agency and all persons who submitted comments if the petition is for a rule to supersede a State regulation, or (2) the petitioner, all persons who would be subject to the State regulation if it is not superseded and all persons who submitted comments if the petition is for a rule not to supersede a State regulation. The Secretary shall publish in the Federal Register a notice of the final rule granting or denying the petition and the reasons and basis therefor.

(c) If the Secretary finds that he cannot issue a final rule within the 6 month period pursuant to subparagraph (a) of this section, he shall publish a notice in the Federal Register extending such period to a date certain, together with the reasons for the delay.

§ 430.48 Request for reconsideration.

(a) Any petitioner whose petition for a rule has been denied may request reconsideration within 30 days of denial. The request shall contain a statement of facts and reasons supporting reconsideration and shall be submitted in writing to the Secretary.

(b) The denial of a petition will be reconsidered only where it is alleged and demonstrated that the denial was based on error in law or fact and that evidence of the error is found in the record of the proceedings.

(c) If the Secretary fails to take action on the request for reconsideration within 30 days, the request is deemed denied, and the petitioner may seek such judicial review as may be appropriate and available.

(d) A petitioner has not exhausted his other administrative remedies until a request for reconsideration has been filed and acted upon or deemed denied.

§ 430.49 Finality of decision.

(a) A decision to prescribe a rule superseding a State standard or other requirement is final on the date the rule is issued, i.e., signed by the Secretary. A decision to deny such a petition is final on the day a denial of a request for reconsideration is issued, i.e., signed by the Secretary.

(b) A decision to prescribe a rule that a State energy efficiency standard or other requirement not be superseded is final on the date the rule is issued, i.e., signed by the Secretary. A decision to prescribe such a rule has no effect on other regulations of a covered product of any other State.

5. Part 430 is amended by adding a new Subpart E, to read as follows:

Subpart E—Small Business Exemptions

Sec.

430.50 Purpose and scope.
430.51 Applicability.
430.52 Eligibility.
430.53 Requirements for application.
430.54 Processing of applications.
430.55 Authority.
430.56 Referral to the Attorney General.
430.57 Decision and order.
430.58 Duration of temporary exemption.

Subpart E—Small Business Exemptions

Authority: Sec. 325, Energy Policy and Conservation Act, Pub. L. 94–163, as amended by Pub. L. 95–619 (42 U.S.C. 6295).

§ 430.50 Scope and purpose.

(a) This subpart establishes procedures for the submission and disposition of applications filed by manufacturers of covered consumer products with annual gross revenues that do not exceed $8 million to temporarily exempt them from all or part of the energy efficiency standards established by this part.

(b) The purpose of this subpart is to provide content and format requirements for manufacturers of covered consumer products with low annual gross revenues who desire to apply for temporary exemptions from applicable energy efficiency standards.

§ 430.51 Applicability.

This subpart applies to manufacturers of covered products. Applications filed by manufacturers under this subpart shall be submitted to the Secretary within 60 days from the date the Federal energy efficiency standards are prescribed for which an exemption is sought.

§ 430.52 Eligibility.

Any manufacturer with annual gross revenues that do not exceed $8,000,000 for the preceding 12-month period from all its operations (including the manufacture and sale of covered products) that manufacturers covered products may apply for an exemption. In determining the annual gross revenues of any manufacturer under this subpart, the annual gross revenue of any other person who controls, is controlled by, or is under common control with, such manufacturer shall be taken into account.

§ 430.53 Requirements for application.

(a) Each application filed under this subpart shall be submitted in triplicate to: The Secretary, U.S. Department of Energy, Small Business Exemptions, Energy Efficiency Standards for Consumer Products, 1000 Independence Avenue, S.W., Washington, D.C. 20585.

(b) An application need be in no particular form but it shall be in writing and shall include the following:

(1) Name of applicant (including business name, if different) and mailing address. Address of the affected facility or operation, if different, should also be included;

(2) Whether the applicant controls, is controlled by, or is under common control with another manufacturer, and if so, the nature of that control relationship;

(3) Signature of the owner, partner, or principal executive officer requesting the exemption;

(4) State the text or substance of the standard or portion thereof for which the temporary exemption is sought, and the length of time for such exemption;

(5) Annual financial statements, profit and loss statements, and balance sheets of the applicant and any person who controls, is controlled by, or is under common control with, the applicant for the three-years immediately preceding the application for exemption;

(6) Describe the covered consumer product, including the number produced by applicant, and the period of production for which the temporary exemption is sought;

(7) The toal number and dollar volume for each type and class of covered product manufactured by the applicant in the three model years immediately preceding the application for exemption;

(8) Provide evidence that applicant would be at an operational or financing disadvantage with other manufacturers with respect to the planning, design, or installation of equipment, or the obtaining of financing therefor, or likely to suffer such disadvantage, providing to the maximum extent feasible;

(i) Any written information concerning the design capabilities of the covered consumer products, which would bear on applicant's efforts to comply with the applicable standards, including an estimated schedule for the implementation of the design changes to comply with the applicable standards;

(ii) A detailed estimate of the total costs to comply with the applicable standards, listing and identifying each cost to the maximum possible extent;

(iii) A list or description of each item of equipment that would have to be obtained or modified in order to achieve compliance;

(iv) The itemized estimated cost to obtain or modify each item if compliance were to be achieved (A) as soon as possible, (B) at the end of a 1 year exemption period (if the application is for 1 year); (C) at the end of a 2 year exemption period (if the application is for 2 years);

(v) The estimated price increases per unit to comply with the Federal standard and a statement of the anticipated effect of each such price increase;

(vi) A description of applicant's efforts to comply with the standards, including (A) a discussion of alternative means of compliance considered and the reasons for rejection of each, (B) a description of the steps to be taken while the exemption is in effect, and the estimated date by which full compliance will be achieved either by design changes or termination of production of nonconforming units;

(9) A statement whether, at the end of the exemption period, the applicant will be able to comply with the standard;

(10) A discussion of any other hardships (i.e., loss of market shares) that the applicant desires the Secretary to consider;

(11) Evidence that failure to grant an exemption would likely result in a lessening of competition; and

(12) The applicant shall identify all other manufacturers of domestically marketed units of the same or similar product type, and all other persons reasonably ascertainable by the applicant as a person who may be aggrieved by the action sought.

(c) The applicant shall set forth all data, views and arguments supporting the exemption, including the information and data specified, above, and the calculations and analyses used to develop that information and data. No documents may be incorporated by reference in an application unless the documents are submitted with the application.

(d)(1) The application shall specify and segregate any part of the information and data submitted under this subpart that the applicant considers to be confidential;

(2) With respect to information and data requested to be withheld under 10 CFR 1004.11, the application shall show that disclosure of the information and data would result in significant competitive damage, specify the period during which the information and data must be withheld to avoid that damage, and show that earlier disclosure would result in that damage;

(e) The knowing and willful submission of false, fictitious or fraudulent information will subject the applicant to the civil and criminal penalties of 18 U.S.C. 1001.

§ 430.54 Processing of applications.

(a) The applicant shall serve a copy of the application, all supporting documents, and all subsequent submissions, or a copy from which confidential information has been deleted in accordance with § 430.53, to the Secretary to be made available for public review. The applicant shall notify in writing those persons listed in answer to § 430.53(b)(12) above, of the filing of an application for exemption under this subpart and shall include a statement that the recipient may submit comments regarding the application to the Secretary within 60 days of receipt in

triplicate with a copy to the applicant. The application filed with the Secretary shall include certification to the Department of Energy that the applicant has complied with the requirements of this section and shall include the names and addresses of each person to whom a copy of the application was sent and the date such copy was transmitted to each such addressee.

(b) The Secretary shall publish notice of an application for exemption and a brief description of the reasons therefor, in the Federal Register. The notice shall set forth the availability for public review of all data and information available, and shall solicit comments, data and information with respect to the determination of the application. Except as may otherwise be specified, the period for public comment shall be 60 days after the notice appears in the Federal Register.

(c) The Secretary on his own initiative may convene a hearing if, in his discretion, he considers such hearing will advance his evaluation of the application.

§ 430.55 Authority.

An exemption filed under this subpart shall be granted by the Secretary only after obtaining the written views of the Attorney General and finding that a failure to allow an exemption would likely result in a lessening of competition.

§ 430.56 Referral to the Attorney General.

Notice of the application for exemption under this subpart shall be transmitted to the Attorney General by the Secretary and shall contain (i) a statement of the facts and of the reasons for the exemption, and (ii) copies of all documents submitted.

§ 430.57 Decision and order.

(a) Upon consideration of the application and other relevant information received or obtained, the Secretary shall issue an order granting or denying the application.

(b) The order shall include a written statement setting forth the relevant facts and the legal basis of the order.

(c) The Secretary shall serve a copy of the order upon the applicant, any other person who commented on the application pursuant to § 430.54 or who participated in the proceeding and upon any other person readily identifiable by the Secretary as one who is interested in or aggrieved by such order. The Secretary also shall publish in the Federal Register a notice of the grant or denial of the order and the reason therefor.

(d) Unless a later effective date is specified in the notice of the exemption, a temporary exemption is effective upon publication of the notice in the Federal Register and exempts covered products manufactured on and after the effective date. The filing of an application for exemption shall not constitute grounds for noncompliance with any requirements of this part, until an exemption has been granted.

§ 430.58 Duration of temporary exemption.

A temporary exemption terminates according to its terms but not later than twenty-four months after prescription of the rule for which the exemption is allowed.

6. Part 430 is amended by adding a new Subpart F, to read as follows:

Subpart F—Certification and Enforcement

Sec.
430.60 Scope and purpose.
430.61 Compliance—standards.
430.62 Certification—general requirements.
430.63 Certification—statement of compliance.
430.64 Distribution in commerce.
430.65 Certification—test sample selection.
430.66 Certification—retention of test units.
430.67 Certification—test unit preparation.
430.68 Cessation of distribution of a basic model.
430.69 Manufacturer responsibility for monitoring compliance.
430.70 Reporting requirements.
430.71 Certification—maintenance of records.
430.72 Enforcement.
430.73 Remedies.
430.74 Rights of entry and inspection.
430.75 Field test exemption.
430.76 Prohibited acts.
430.77 Hearing and appeals.
430.78 Citizen suits.
430.79 Imported products.
430.80 Exported products.
430.81 Subpoena.
430.82 Confidentiality.

Subpart F—Certification and Enforcement

Authority: Secs. 326, 328, 332, and 333, Energy Policy and Conservation Act, Pub. L. 94-163, as amended by Pub. L. 95-619 (42 U.S.C. 6296, 6298, 6302, 6303).

§ 430.60 Scope and purpose.

The regulations in this subpart prescribe the procedures to be followed for certification and enforcement testing to determine whether a basic model of a covered product complies with the applicable energy efficiency standard.

§ 430.61 Compliance—standards.

(a) No basic model of a covered product shall be distributed in commerce in the United States unless it meets the applicable energy efficiency standard set forth in subpart C and the certification and enforcement provisions set forth in this subpart.

(b) *Sampling.* The determination that a manufacturer's basic model complies with the applicable energy efficiency standard shall be based on testing conducted in accordance with the statistical sampling procedures which are set forth in Appendix A of this subpart, the applicable test procedures prescribed in subpart B, and the certification and enforcement provisions set forth in this subpart.

§ 430.62 Certification—general requirements.

(a) Each manufacturer or private labeler before distributing in commerce any basic model of a covered product subject to the applicable energy efficiency standard set forth in section 430.20, shall certify by means of a statement of compliance that each basic model meets the requirements of that standard.

(b) Each basic model of a covered product distributed in commerce which is subject to energy efficiency standards prescribed in subpart C, shall meet all certification requirements described in this subpart.

(c) Any change to a basic model which affects energy consumption may constitute the addition of a new basic model and is subject to the requirements of paragraph (b) of this section. If such change does not alter compliance with the applicable energy efficiency standards for the basic model, the new model shall be considered certified.

(d) Each private labeler is required to submit a statement of compliance, but is not required to conduct sampling and testing in accordance with paragraph (b) of section 430.61. In lieu of conducting such tests he shall submit:

(1) A signed statement from the manufacturer of such covered products that the required sampling in accordance with paragraph (b) of section 430.61 has been conducted and the basic model complies with the applicable energy efficiency standard;

(2) The date of the manufacturer's submitted statement of compliance to DOE; and

(3) The location of the supporting test data.

§ 430.63 Certification—statement of compliance.

(a) *Certification of production units.* For each basic model of a covered product, a manufacturer is required to determine compliance with the applicable energy efficiency standard, based upon testing production units in accordance with section 430.62 and

Appendix A (Sampling Plan Requirement) of this subpart. The manufacturer and each private labeler of such product shall submit a statement of compliance together with a certification report for the basic model. The content and format of the statement of compliance are prescribed in Appendix B of this subpart.

(1) By submitting a statement of compliance for a basic model, a manufacturer or private labeler certifies that:

(i) the basic model complies with the applicable energy efficiency standards;

(ii) all batches (as defined in section 430.2) of the basic model, including all models and all configurations within the basic model, are represented by the test units reported in the certification report and comply with the applicable energy efficiency standards;

(iii) all testing on which the certification report is based was conducted in conformance with the applicable test requirements prescribed in subpart B and all test data is reported in accordance with this subpart;

(iv) all test data obtained for the certification report are included in such report and are true, accurate, and complete representations of such testing;

(v) all other information reported in the certification report is true, accurate, and complete; and

(vi) the manufacturer or private labeler is aware of the penalties associated with violations of the Act and the regulations thereunder and 18 U.S.C. 1001 which prohibits knowingly making false statements to the Federal Government.

(2) A manufacturer or private labeler shall not distribute any basic model of such covered product into commerce prior to submitting a statement of compliance and a certification report for the basic model, unless the manufacturer proceeds in accordance with paragraph (b) of this section.

(b) *Conditional Certification Based on Testing of Nonproduction (Prototype) Units.* For each basic model of a covered product, a manufacturer is allowed to determine initial compliance with the applicable energy efficiency standard based upon testing nonproduction (prototype) units in accordance with the applicable test procedures prescribed in subpart B, the manufacturer and each private labeler of such product shall submit a statement of compliance together with a conditional certification report for the basic model. No statement of compliance shall be submitted if the measured energy efficiency of any unit tested is less than the applicable energy efficiency standard for such basic model. The content and format of the statement of compliance to accompany the conditional certification report are prescribed in Appendix B of this subpart.

(1) By submitting a statement of compliance and conditional certification report for a basic model, a manufacturer or private labeler certifies that:

(i) production units of the basic model shall comply with the applicable energy efficiency standards;

(ii) all batches of the basic model, including all models and all configurations within the basic model, are represented by the test units reported in the conditional certification report and shall comply with applicable energy efficiency standards;

(iii) all testing on which the conditional certification report is based was conducted in conformance with the applicable test procedures prescribed in subpart B and all test data is reported in accordance with this subpart;

(iv) all test data obtained for the conditional certification report are included in such report and are true, accurate and complete representations of such testing;

(v) all other information reported in the conditional certification report is true, accurate and complete;

(vi) the units tested are representative of production units with respect to all energy performance characteristics;

(vii) distribution of the basic model shall continue only upon submittal of a certification report pursuant to the schedule set forth in section 430.64;

(viii) all certification requirements of this subpart shall be completed, and

(ix) the manufacturer or private labeler is aware of the penalties associated with violations of the act and the regulations thereunder and 18 U.S.C. which prohibits knowingly making false statements to the Federal Government.

(2) A manufacturer or private labeler who has filed a statement of compliance and a conditional certification report shall not distribute any basic model of such new covered product into commerce prior to 60 days after such filing. The manufacturer shall certify production units in accordance with Appendix A (Sampling Plan Requirements) of this subpart pursuant to the schedule set forth in section 430.64.

(c) *Recertification.* (1) Except as required by the Secretary, each basic model requires the submittal of only one statement of compliance and certification report. The Secretary may require that a manufacturer submit a new statement of compliance together with a new certification report, based upon new testing in accordance with section 430.62 and Appendix A (Sampling Plan Requirement) of this subpart at any time more than one year from the date of the most recent certification report of the subject basic model. Such request shall be made in writing.

(2) If a new statement of compliance and a new certification report are not received by DOE by the date required in a request for recertification in accordance with paragraph (c), then all units of the affected basic model manufactured after the required date for recertification shall be treated as in noncompliance with this subpart in the same manner as though initial certification of the basic model had never occurred.

§ 430.64 Distribution in commerce.

(a) A manufacturer or private labeler may distribute a basic model of a covered product in commerce as soon as such manufacturer or private labeler has certified that such basic model is in compliance with the applicable DOE energy efficiency standard by filing a statement of compliance together with a certification report for the basic model in accordance with paragraph (a) of section 430.63.

(b) A manufacturer or private labeler who has filed a statement of compliance together with a conditional certification report in accordance with paragraph (b) of section 430.63 may distribute a basic model of a covered product in commerce no sooner than 60 calendar days after such filing.

(c) A manufacturer or private labeler who has filed a statement of compliance with a conditional certification report shall file a statement of compliance with a certification report based upon testing of production units of each basic model for which the conditional certification report was filed within the applicable number of calendar days specified below from the start of production of each basic model;

(1) Furnaces and boilers: 20 days.

(2) Water heaters: 20 days.

(3) Refrigerator/refrigerator-freezers: 55 days.

(4) Kitchen ranges and ovens: 20 days.

(5) Central air conditioners: 40 days.

(6) Clothes dryers: 20 days.

(7) Room air conditioners: 20 days.

(8) Freezers: 55 days.

(d) The allotted number of days in paragraph (c) is based upon the estimated time required to sequentially test for units of each product. DOE may grant an extension of time to complete testing upon a written request from the manufacturer, if supported by evidence that additional time is necessary (e.g., evidence that the testing of more than four units is required).

(e) Failure to submit a certification report for the subject basic model in the allotted number of days prescribed in paragraph (c), or granted under paragraph (d), shall subject the manufacturer to assessment of a civil penalty for a knowing violation for each unit of the basic model distributed in commerce.

§ 430.65 Certification—test sample selection.

(a) In order to select test units for certification testing, in accordance with the statistical sampling procedures set forth in Appendix A of this subpart, the manufacturer shall select a batch of production units. Such batch shall be selected from all production units of a basic model from a manufacturer's production over a period of time no less than two days, or the total period of production for the applicable basic model, whichever is less. The batch may be selected from different production runs or from different production facilities.

(1) Each unit of a basic model in a batch shall have been produced by the manufacturer for distribution in commerce using the manufacturer's normal production process.

(2) A manufacturer shall select a batch sample of no fewer than 20 units from the batch of the basic model by means of a random process in which all units in the batch are sequentially numbered and a random numbers table is used to select the units to be included in the batch sample. The manufacturer shall keep on hand all units in the batch sample until such time as the basic model is determined to be in compliance in accordance with paragraph (a) of section 430.63.

(3) Individual test units comprising the test sample shall be randomly selected from the batch sample. The random selection shall be achieved by sequentially numbering all of the units in a batch sample and then using a table of random numbers to select the units to be tested.

(b) If a manufacturer has tested production units of a basic model to satisfy the test requirements of the Federal Trade Commission "Rule for Using Energy Costs and Consumption Information Used in Labeling and Advertising for Consumer Appliances Under the Energy Policy and Conservation Act," 16 CFR Part 305, then, all such units, in addition to any units selected under this section, shall comprise the first test sample for determining compliance under paragraph (a) of § 430.63. The manufacturer shall report the results of all such tests to DOE with the statement of compliance and certification report for such basic model.

(c) If a manufacturer elects to conduct conditional certification, such manufacturer shall test one or more nonproduction units for compliance in accordance with paragraph (b) of § 430.63 and the applicable energy efficiency standard set forth in § 430.32. A manufacturer who elects to conditionally certify shall select and test production units for determination of compliance in accordance with paragraph (a) of § 430.63.

(d) If a manufacturer has tested nonproduction units of a basic model to satisfy the test requirements of the Federal Trade Commission "Rule for Using Energy Costs and Consumption Information Used in Labeling and Advertising for Consumer Appliances Under the Energy Policy and Conservation Act," 16 CFR Part 305, and production of the basic model has not begun, then the results of all such tests of nonproduction units shall be included in meeting the requirements of paragraph (b) of § 430.63.

§ 430.66 Certification—retention of test units

(a) The production unit with the highest measured energy efficiency among all the units of the basic model that were tested to certify the manufacturer's compliance with the applicable energy efficiency standard shall be retained in retestable condition by the manufacturer for no less than two years after the basic model has ceased to be produced by the manufacturer.

(b) The manufacturer shall retain in retestable condition all the other production units of the basic model that were tested to certify the manufacturer's compliance with the applicable energy efficiency standard for 30 calendar days after the date of filing with DOE of the statement of compliance and the certification report for the basic model. DOE may notify the manufacturer during this time period to retain all the units in retestable condition for an additional 120 days for further testing. If such testing is required by DOE, the Secretary will notify the manufacturer during the 120 days by means of a test notice in accordance with § 430.72.

(c) If the manufacturer files a conditional certification report on the basis of nonproduction units, the manufacturer shall retain in retestable condition all nonproduction units of the basic model tested to certify the manufacturer's compliance with the applicable energy efficiency standard until the requirements of paragraphs (a) and (b) are met.

§ 430.67 Certification—test unit preparation.

(a) Prior to and during testing, a production test unit selected in accordance with § 430.65 shall not be prepared, modified, or adjusted in any manner unless such preparation, modification, or adjustment is allowed by the applicable DOE test procedure. One test shall be conducted for each test unit in accordance with the applicable test procedures prescribed in subpart B.

(b) No quality control, testing or assembly procedures shall be performed on a production test unit, or any parts and subassemblies thereof, that is not performed during the production and assembly of all other units included in the basic model.

§ 430.68 Cessation of distribution of a basic model.

(a) In the event that a new certification test, required pursuant to section 430.63(b), shows that a basic model is not in compliance with the applicable energy efficiency standard, the manufacturer or private labeler shall:

(1) Immediately cease distribution in commerce of the basic model on the day such noncompliance is determined;

(2) Give immediate written notification of the determination of noncompliance, if the basic model has been previously certified in compliance, to:

(i) DOE, and

(ii) All persons to whom the manufacturer has previously distributed units of the basic model manufactured after the date of the last determination of compliance;

(3) The manufacturer may modify the noncompliant basic model in such manner as to make it comply with the applicable energy efficiency standard. Such modified basic model shall then be treated as a new basic model as provided for in paragraph (b) of section 430.62; except that in addition to satisfying all requirements of this subpart, the manufacturer shall also:

(i) Report as an attachment to the certification report, all test results used in the noncompliance determination and all subsequent product modifications; and

(ii) Maintain records that demonstrate that modifications have been made to all units of the modified basic model distributed in commerce.

(b) If a basic model is found to be in noncompliance with these regulations by reason of failure to be properly certified as required by this subpart, the Secretary may seek, among other things, injuctive action as to such basic model.

(c) If the Secretary determines that a test facility used by a manufacturer for certification testing is not appropriate for conducting the tests required for certification based upon DOE inspection of the test facility and available energy efficiency test data, the Secretary will notify the manufacturer in writing of his determination and the reasons therefor. After such notification, no data derived from the subject test facility shall be acceptable for the purposes of this part and the Secretary may request the manufacturer, with respect to models certified on the basis of testing in said facility, to cease to distribute in commerce all units of such basic models.

(d) The manufacturer may request within 15 calendar days, in writing, that the Secretary reconsider his determination pursuant to paragraph (c) that a test facility is not appropriate for conducting certification tests. The manufacturer's request for reconsideration shall include evidence to support the merits of such reconsideration. Such request may include, but not be limited to, evidence that changes have been made to the test facility and such changes have resolved the reasons for disqualification.

§ 430.69 Manufacturer responsibility for monitoring compliance.

(a) A manufacturer shall continue to monitor the production of covered products after certification to assure continued compliance of each basic model with applicable energy efficiency standards and to assure that no significant differences exist in the efficiency of different batches of each basic model.

(b) If, after a basic model has been certified by a manufacturer to be in compliance with the applicable energy efficiency standard, the manufacturer discovers information that the energy efficiency level of such basic model may be less than the applicable energy efficiency standard, then the manufacturer shall:

(1) Immediately notify DOE that such information has been discovered and provide a description of the information; and

(2) Take all necessary action to determine whether the basic model is in noncompliance, the extent to which such units have been distributed, and to remedy such noncompliance.

(c) If a manufacturer determines a basic model is in noncompliance pursuant to paragraph (b) of this section, such manufacturer shall proceed with the requirements of section 430.68. Failure to comply with the requirements of paragraph (b) of this section may cause a manufacturer to be liable for a "knowing violation," as defined in the Act.

§ 430.70 Reporting requirements.

(a) For each basic model of a covered product to be distributed in commerce, a manufacturer or private labeler shall file by certified mail to: Department of Energy, Consumer Products Efficiency Branch, Certification and Enforcement, Forrestal Building, Mail Stop GH068, 1000 Independence Avenue, S.W., Washington, D.C. 20585.

(1) A pre-certification report,

(2) A certification report,

(3) A conditional certification report (when the initial certification testing is conducted on nonproduction units), and

(4) A quarterly post-certification report, in accordance with the requirements prescribed in this subsection.

(b) *Pre-certification Report.* A pre-certification report shall be filed within 60 calendar days after the date of issuance of this rule for each basic model of a covered product currently being manufactured, and shall include the information and follow the format provided in Appendix C of this subpart. A pre-certification report shall be filed at least 60 calendar days prior to any certification testing for each new basic model manufactured thereafter.

(c) *Certification Report.* A certification report shall be filed for a basic model prior to commercial distribution of that basic model and shall include the information and follow the format provided in Appendix B of this subpart, unless a conditional certification report has been filed. In such case, a certification report shall be filed pursuant to the schedule set forth in section 430.64.

(d) *Conditional Certification Report.* A conditional certification report is required to be filed 60 days prior to distribution of a basic model into commerce, if a manufacturer elects to conduct conditional certification. Such report shall include the information and follow the format provided in Appendix B of this subpart.

(e) *Quarterly Post-certification Report.* A post-certification report shall be filed quarterly for each basic model, commencing three months after the date of the initial certification report. Such post-certification report shall include the information and follow the format provided in Appendix B. Information categories for which there is no data revision shall be marked "No Change." The report shall include, but not be limited to:

(1) Revisions necessary to maintain current information contained in the certification report (e.g., additions to or deletions from the model numbers being manufactured under a given basic model).

(2) A description of any other events that might affect the energy efficiency of the basic model (e.g., modifications in production processes).

(3) The number and summary results of energy efficiency tests using the applicable test procedures prescribed in subpart B and conducted since the last post-certification report.

(4) Production and test schedules for the forthcoming six months.

(f) *Additional Information.* The manufacturer, pursuant to a request made by the Secretary, shall provide DOE within 30 days of such request, verification of, or revision of the information filed in reports required in this section, including, but not be limited to:

(1) Model numbers of models scheduled for production for the time period designated in the request;

(2) Model numbers of models produced during the time period designated in the request; and

(3) Schedules of certification testing.

(g) For a basic model determined to be in noncompliance, a manufacturer or private labeler, pursuant to a request made by the Secretary, shall provide DOE within 30 days of the request, records, reports and other documentation pertaining to the acquisition, ordering, storage, shipment, or sale of such basic model.

§ 430.71 Certification—maintenance of records.

(a) The manufacturer of any covered product subject to any of the standards or procedures prescribed in this part, or any private labeler of any covered product who elects to conduct testing in accordance with paragraph (d) of section 430.62, shall establish, maintain, and retain the following organized and indexed records:

(1) A description of energy efficiency test facilities and a record of the calibration of the instrumentation utilized to conduct the test procedures prescribed in subpart B. This record shall include, as a minimum, the information listed in and follow the format given in Appendix D of this subpart.

(2) A description of all repairs, maintenance, and other servicing performed on energy efficiency test facilities and instrumentation utilized to conduct DOE test procedures for which required information is listed in Appendix D of this subpart, giving: (i) the date and time of the maintenance or service, (ii) the reason for it, (iii) the

person authorizing it, and (iv) the names of the supervisory personnel responsible for the maintenance and service.

(3) A statement of the manufacturer's policy for maintaining calibration of the instrumentation used to conduct DOE test procedures.

(4) The supporting test data associated with tests performed on any test units to satisfy the requirements of this subpart (except tests performed by DOE directly). This record shall include the information listed in and follow the format given in Appendix D of this subpart.

(b) The manufacturer or private labeler of any covered product subject to any of the standards or procedures prescribed in this part shall retain on file a copy of each report filed to DOE pursuant to § 430.70.

(c) All records required to be maintained shall be retained by the manufacturer for a period of two years from the date that production of the applicable model has ceased. Records must be retained on standard sized paper.

§ 430.72 Enforcement.

(a) In order to enforce a manufacturer's compliance with the appliable energy efficiency standard, the Secretary shall conduct testing of covered products under this subpart by means of a test notice addressed to the manufacturer in accordance with the following requirements:

(1) The test notice will be signed by the Secretary or his designee. The test notice will be mailed or delivered by DOE to the plant manager or other responsible official, as designated by the manufacturer.

(2) The test noticed will specify the model or basic model to be selected for testing, the method of selecting the test sample, the time at which testing shall be initiated, the date by which testing is scheduled to be completed and the facility at which testing will be conducted. The test notice may also provide for situations in which the selected basic model is unavailable for testing, and may include alternative basic models.

(b) *Testing laboratory.* The Secretary may require in a test notice that the manufacturer of a covered product shall supply at his expense a reasonable number of units of a basic model specified in such test notice to any testing laboratory designated by the Secretary. The number of units of a basic model specified in a test notice shall not exceed twenty, unless units that are supplied fail to complete the test. Whenever DOE conducts enforcement testing at a designated laboratory in accordance with a test notice issued under this section, the resulting test data shall constitute official test data for that basic model. Such test data will be used by DOE to make a determination of compliance or noncompliance if sufficient number of tests have been conducted to satisfy the requirements of Appendix A of this subpart.

(c) The manufacturer shall ship, within 48 hours, the specified test units of a basic model to the testing laboratory.

(d) *Sampling.* The determination that a manufacturer's basic model complies with the applicable energy efficiency standard shall be based on the procedures set forth in paragraph (b) of section 430.61, except that if the calculations of Appendix A determines a total required sample size greater than twenty, only twenty units shall be tested and the lower confidence limit shall be calculated for the test sample size of twenty, or 90 percent of the applicable energy efficiency standard, whichever is greater.

(e) *Test unit selection.* A DOE inspector shall select a batch, a batch sample, and test units from the batch sample in accordance with the provision of section 430.65 and the conditions specified in the test notice. The batch may be subdivided by DOE utilizing specific criteria (e.g., date of manufacture, component supplier, location of manufacturing facility, or other criteria which may differentiate one unit from another within a basic model). The batch sample will then be randomly selected from one or more subdivided groups within the batch. The manufacturer shall keep on hand all units in the batch sample until such time as the basic model is determined to be in compliance or noncompliance.

(f) *Test unit preparation.* Test units shall be prepared for testing in the same manner as they are prepared for certification testing pursuant to section 430.67.

§ 430.73 Remedies.

If DOE determines that a basic model of a covered product does not comply with an applicable energy efficiency standard:

(a) DOE will notify the manufacturer, private labeler or any other person as required, of this finding and of the Secretary's intent to seek a judicial order restraining further distribution in commerce of such basic model unless the manufacturer, private labeler or any other person as required, delivers to DOE within 15 calendar days a statement, satisfactory to DOE, of the steps he will take to insure that the noncompliant model will no longer be distributed in commerce. DOE will monitor the implementation of such statement.

(b) If the manufacturer, private labeler or any other person as required, fails to stop distribution of the noncompliant model, the Secretary may seek to restrain such violation in accordance with section 334 of the Act.

(c) The Secretary shall determine whether the facts of the case warrant the assessment of civil penalties for knowing violations in accordance with section 333 of the Act.

§ 430.74 Rights of entry, and inspection.

(a) An inspection conducted pursuant to this section may be for any of the following purposes for determining:

(1) Whether energy efficiency tests for certification are being conducted pursuant to the requirements contained in this subpart:

(2) Whether covered products manufactured for distribution in commerce conform to applicable energy efficiency standards; and

(3) Whether required records are being properly maintained.

(b) A DOE inspector may enter, in any manner authorized by law, any facility or site of a manufacturer or private labeler during operating hours:

(1) Where tests, required by this regulation, are conducted or any procedures or activities connected with such tests are or were performed;

(2) Where any test unit is present; and

(3) Where records, reports, other documents or information required to be maintained or provided to the Secretary are located.

(c) Upon entry to any facility or site referred to in paragraph (b), the functions of the DOE inspector shall include, but not be limited to:

(1) Inspection of quality control plans and procedures necessary to the manufacture, assembly, and storage which relate to the testing of covered products;

(2) Inspection of testing procedures or preconditioning of test products, and the selection of test products;

(3) Inspection and making copies of any records, reports, documents, or information required to be maintained or provided to the Secretary under this Part;

(d) Any DOE inspector shall be furnished by those in charge of a facility or site being inspected with such reasonable assistance as may be requested to help them discharge any function listed in this section. A manufacturer or private labeler is required to cause those in charge of a facility or site operated for its benefit to

furnish such reasonable assistance without charge to DOE.

(e) The provisions of this section apply whether the facility or site is owned or controlled by the manufacturer or private labeler or by one who acts for the manufacturer or private labeler.

(f) Failure of the manufacturer or private labeler or their agents to comply with or cooperate with the enforcement or any provision of this section shall be grounds for a finding of product noncompliance by the Secretary.

§ 430.75 Field test exemption.

(a) Any manufacturer or private labeler may request a field test exemption from the applicable energy efficiency standards by demonstrating that a proposed field test program is for the purpose of research, investigations, studies, demonstrations, or training.

(b) Such request shall include:

(1) The number of units involved;

(2) The duration of the field test;

(3) The ownership arrangement with regard to the units involved in the test;

(4) The intended final disposition of the units.

§ 430.76 Prohibited acts.

(a) Each of the following is a prohibited act pursuant to section 332 of the Act:

(1) Failure to permit access to, or copying of records required to be supplied under the Act and this rule or fail to make reports or provide other information required to be supplied under the Act and this rule;

(2) Failure of a manufacturer to supply at his expense a reasonable number of covered products to a test laboratory designated by the Secretary;

(3) Failure of a manufacturer to permit a representative designated by the Secretary to observe any testing required by the Act and this rule and inspect the results of such testing; and

(4) Distribution in commerce by a manufacturer or private labeler of any new covered product which is not in compliance with an applicable energy efficiency standard prescribed under the Act and this rule.

(b) In accordance with section 333 of the Act, any person who knowingly violates any provision of paragraph (a) of this section may be subject to assessment of a civil penalty of $100 for each violation. Each violation of paragraph (a) shall constitute a separate violation with respect to each covered product, and each day of noncompliance shall constitute a separate violation.

§ 430.77 Hearings and appeals.

(a) Before issuing an order assessing a civil penalty against any person under this section, the Secretary shall provide to such person notice of the proposed penalty. Such notice shall inform such person of his opportunity to elect in writing within 30 days after the date of receipt of such notice to have the procedures of paragraph (c) [in lieu of those of paragraph (b)] apply with respect to such assessment.

(b)(1) Unless an election is made within 30 calendar days after receipt of notice under paragraph (a) to have paragraph (c) apply with respect to such penalty, the Secretary shall assess the penalty, by order, after a determination of violation has been made on the record after an opportunity for an agency hearing pursuant to section 554 of Title 5, United States Code, before an administrative law judge appointed under section 3105 of such Title 5. Such assessment order shall include the administrative law judge's findings and the basis for such assessment.

(2) Any person against whom a penalty is assessed under this section may, within 60 calendar days after the date of the order of the Secretary assessing such penalty, institute an action in the United States Court of Appeals for the appropriate judicial circuit for judicial review of such order in accordance with Chapter 7 of Title 5, United States Code. The court shall have jurisdiction to enter a judgment affirming, modifying, or setting aside in whole or in part, the order of the Secretary, or the court may remand the proceeding to the Secretary for such further action as the court may direct.

(c)(1) In the case of any civil penalty with respect to which the procedures of this section have been elected, the Secretary shall promptly assess such penalty, by order, after the date of the receipt of the notice under paragraph (a) of the proposed penalty.

(2) If the civil penalty has not been paid within 60 calendar days after the assessment has been made under paragraph (c)(1), the Secretary shall institute an action in the appropriate District Court of the United States for an order affirming the assessment of the civil penalty. The court shall have authority to review de novo the law and the facts involved, and shall have jurisdiction to enter a judgment enforcing, modifying, and enforcing as so modified, or setting aside in whole or in part, such assessment.

(3) Any election to have this paragraph apply may not be revoked except with the consent of the Secretary.

(d) If any person fails to pay an assessment of a civil penalty after it has become a final and unappealable order under paragraph (b), or after the appropriate District Court has entered final judgment in favor of the Secretary under paragraph (c), the Secretary shall institute an action to recover the amount of such penalty in any appropriate District Court of the United States. In such action, the validity and appropriateness of such final assessment order or judgment shall not be subject to review.

(e)(1) In accordance with the provisions of section 333(d)(5)(A) of the Act and notwithstanding the provisions of Title 28, United States Code, or section 502(c) of the Department of Energy Organization Act, the Secretary shall be represented by the general counsel of the Department of Energy (or any attorney or attorneys within DOE designated by the Secretary) who shall supervise, conduct, and argue any civil litigation to which paragraph (c) of this section applies including any related collection action under paragraph (d) in a court of the United States or in any other court, except the Supreme Court of the United States. However, the Secretary or the general counsel shall consult with the Attorney General concerning such litigation, and the Attorney General shall provide, on request, such assistance in the conduct of such litigation as may be appropriate.

(2) In accordance with the provisions of section 333(d)(5)(B) of the Act, and subject to the provisions of section 502(c) of the Department of Energy Organization Act, the Secretary shall be represented by the Attorney General, or the Solicitor General, as appropriate, in actions under this section, except to the extent provided in paragraph (e)(1).

(3) In accordance with the provisions of section 333(d)(5)(c) of the Act, section 402(d) of the Department of Energy Organization Act shall not apply with respect to the function of the Secretary under this section.

§ 430.78 Citizen suits.

(a) In accordance with the provisions of section 335 of the Act, citizen suits may be maintained as hereinafter set forth.

(b) Except as otherwise provided in paragraph (c), any person may commence a civil action against:

(1) Any manufacturer or private labeler who is alleged to be in violation of any provision of this Part; or

(2) The Department of Energy, where there is an alleged failure of DOE to perform any act or duty under this Part which is not discretionary.

(c) The United States District Courts shall have jurisdiction, without regard to the amount in controversy or the citizenship of the parties, to enforce such provision or rule, or order DOE to perform such act or duty, as the case may be.

(d) No action may be commenced:

(1) Under paragraph (b) (1) prior to 60 days after the date on which the plaintiff has given notice of the violation (i) to the Secretary, and (ii) to any alleged violator of such provision or rule. Upon receipt of the complaint, DOE shall determine whether enforcement testing should be undertaken.

(2) Under paragraph (b) (2) prior to 60 days after the date on which the plaintiff has given notice of such action to the Secretary.

(3) Notice required by this section shall be in writing specifying the alleged violation. Notice shall be given to the Secretary and to any alleged violator.

(e) In such action under this section, the Secretary, if not a party, may intervene as a matter of right.

(f) The court, in issuing any final order in any action brought pursuant to paragraph (b) of this section, may award costs of litigation (including reasonable attorney and expert witness fees) to any party, whenever the court determines such award is appropriate.

(g) Nothing in this section shall restrict any right which any person (or class of persons) may have under any statute or common law to seek enforcement of this regulation or to seek any other relief (including relief against the Secretary).

§ 430.79 Imported products.

Pursuant to the provisions of section 331 of the Act:

(a) Any person importing any covered product into the United States shall comply with the provisions of the Act and of this Part; and

(b) Any covered product offered for importation in violation of the act and of this Part shall be refused admission into the customs territory of the United States under rules issued by the Secretary of the Treasury, except that the Secretary of the Treasury may, by such rules, authorize the importation of such covered product upon such terms and conditions (including the furnishing of a bond) as may appear to him appropriate to ensure that such covered product will not violate the act and this Part, or will be exported or abandoned to the United States.

§ 430.80 Exported products.

(a) A covered product, intended solely for export, shall be labeled or marked "Intended For Export" in an easily visible location on the outside of the container and on the product itself, and shall be exempt from the prohibitions and requirements of the Act and this Part.

(b) Any manufacturer or person subject to the provisions of the Act and this Part with respect to any covered product originally intended for export but distributed in commerce for use in the United States may be excluded from the application of the Act and this Part with respect to such product based on a showing that such manufacturer:

(1) Had no knowledge of such product being distributed in commerce for use in the United States; and

(2) Made reasonable efforts to ensure that such product would not be distributed in commerce for use in the United States. Such reasonable efforts would include proper labeling, investigations, prior dealings, and contract provisions.

§ 430.81 Subpoena.

In accordance with the provisions of section 329(a) of the Act, for purposes of carrying out this Part, the Secretary may sign and issue subpoenas for the attendance and testimony of witnesses and the production of relevant books, records, papers, and other documents, and may administer oaths. Witnesses summoned under the provisions of this section shall be paid the same fees and mileage as are paid to witnesses in the courts of the United States. In case of contumacy by, or refusal to obey a subpoena served, upon any persons subject to this Part, the Secretary may seek an order from the District Court of the United States for any District in which such person is found or resides or transacts business requiring such person to appear and give testimony, or to appear and produce documents. Failure to obey such order is punishable by such court as a contempt thereof.

§ 430.82 Confidentiality.

Pursuant to the provisions of 10 CFR 1004.11, any person submitting information or data which he believes to be confidential and exempt by law from public disclosure should submit one complete copy, and fifteen copies from which the information believed to be confidential has been deleted. In accordance with the procedures established at 10 CFR 1004.11 DOE shall make its own determination with regard to any claim that information submitted be exempt from public disclosure.

[FR Doc. 80-19330 Filed 6-27-80; 8:45 am]
BILLING CODE 6450-01-M

APPENDIX A

SAMPLING PLAN REQUIREMENTS FOR CERTIFICATION AND ENFORCEMENT TESTING

PRIMARY PROCEDURE

Step 1 The first sample size (n_1) must be four or more units

Step 2 Compute the mean ($\bar{x}_1$) of the measured energy efficiencies of the n_1 units in the first sample as follows:

$$\bar{x}_1 = \frac{1}{n_1}\left(\sum_{i=1}^{n_1} EE_i\right) \qquad (1)$$

where $\bar{x}_1$ is the sample mean,

n_1 is the number of units in the first sample, and

EE_i is the measured energy efficiency of unit i

Step 3 Compute the standard deviation (s_1) of the measured energy efficiencies of the n_1 units in the first sample as follows:

$$s_1 = \sqrt{\frac{\sum_{i=1}^{n_1} (EE_i - \bar{x}_1)^2}{n_1 - 1}} \qquad (2)$$

Step 4 Compute the standard error ($s_{\bar{x}_1}$) of the measured energy efficiencies of the n_1 units in the first sample as follows:

$$s_{\bar{x}_1} = \frac{s_1}{\sqrt{n_1}} \qquad (3)$$

Step 5 Compute the upper confidence limit (UCL) and lower confidence limit (LCL) for mean of the first sample using the DOE energy efficiency standard as the true mean and a confidence level of 95 percent (two-tailed test) The upper and lower confidence limits (LCL and UCL) are computed as follows:

$$LCL = EEL - t\, s_{\bar{x}_1} \qquad (4)$$

$$UCL = EEL + t\, s_{\bar{x}_1} \qquad (5)$$

where EEL is the applicable energy efficiency standard, and

t is a statistic based on the confidence level (95%) and sample size. (t-statistic values are given in Table A-5).

Step 6. Compare the mean of the first sample ($\bar{x}_1$) to the upper and lower confidence limits to determine one of the following:

a. If the mean of the first sample is below the lower confidence limit, then the basic model is in noncompliance and testing is at an end.

b. If the mean of the first sample is equal to or greater than the upper confidence limit, then the basic model is in compliance and testing is at an end.

c. If the sample mean is equal to or greater than the lower confidence limit but less than the upper confidence limit, then no determination of compliance or noncompliance can be made and a second sample size is determined.

Step 7. Determine the second sample size (n_2) using the standard deviation (s_1) of the first sample and a tolerance limit equal to plus or minus 5 percent of the energy efficiency level prescribed in the DOE energy efficiency standard applicable to the basic model being sampled. The second sample size must be large enough that the combined first and second samples are of sufficient size to generate a theoretical distribution of sample means whose lower confidence limit (97.5% confidence level) has an expected value not more than 5 percent below the standard.

$$n_2 \geq \left(\frac{t\ s_1}{0.05\ \bar{x}_1}\right)^2 - n_1 \qquad (6)$$

where 0.05 is the DOE-specified tolerance limit stated as a percent of the EEL.

In the inequality (6), the solution values of t and n_2 depend on each other. The procedure followed for finding the minimum value of n_2 that satisfies the inequality is iterative, as follows:

(a) Assume an initial value of n_2.

(b) Using a standard table of t-statistics find the value of t for the combined sample size of n_1 plus the assumed initial value of n_2 and a confidence level of 97.5 percent (one-tailed).

(c) Using the t-value so determined and the known values of $\bar{x}_1$ and s_1 calculate the right side of the inequality.

(d) If the inequality is not satisfied, assume a new initial value of n_2 and repeat the process.

(e) Continue this iterative process until the minimum value of n_2 which satisfies the inequality is determined.

(f) Given the value of n_2, determine one of the following:

1 If the value of n_2 is less than or equal to zero and the mean energy efficiency level of the first sample is equal to or greater than the lower confidence limit or 90 percent of the applicable energy efficiency level, whichever is greater, the basic model is in compliance and testing is at an end

2 If the value of n_2 is less than or equal to zero and the mean energy efficiency level of the first sample is less than the lower confidence limit or 90 percent of the applicable energy efficiency level, whichever is greater, the basic model is in noncompliance and testing is at an end

3 If the value of n_2 is greater than zero, then the value of the second sample size is determined to be the integer closest to and equal to or greater than the solution value of n_2 for inequality (6)

Step 8 Compute the mean of the measured energy efficiencies of the n_1 and n_2 units of the combined first and second samples ($\bar{x}_2$) as follows:

$$\bar{x}_2 = \frac{1}{n_1 + n_2} \left(\sum_{i=1}^{n_1 + n_2} EE_i \right) \qquad (7)$$

Step 9 Compute the standard deviation (s_2) of the measured energy efficiencies of the n_1 and n_2 units in the combined first and second samples as follows:

$$s_2 = \sqrt{\frac{\sum_{i=1}^{n_1 + n_2} (EE_i - \bar{x}_2)^2}{n_1 + n_2 - 1}} \qquad (8)$$

Step 10 Compute the standard error ($s_{\bar{x}_2}$) of the measured energy efficiencies of the n_1 and n_2 units in the combined first and second samples as follows:

$$s_{\bar{x}_2} = \frac{s_2}{\sqrt{n_1 + n_2}} \qquad (9)$$

Step 11 Compute the lower confidence limit for the mean of the combined first and second samples using the DOE energy efficiency standard as the true mean and a confidence level of 97 5 percent (one-tailed test)

The lower confidence limit is computed as follows:

$$LCL = EEL - t\, s_{\bar{x}_2} \qquad (10)$$

where the t-statistic is selected for the total number of units in the sample and 97 5 percent (one-tailed) confidence level

Step 12. Compare the combined sample mean to the lower confidence limit to find one of the following:

a. If the mean of the combined sample is less than the lower confidence limit or 90 percent of the applicable energy efficiency level, whichever is greater, the basic model is in noncompliance and testing is at an end.

b. If the mean of the combined sample is equal to or greater than the lower confidence limit or 90 percent of the applicable energy efficiency level, whichever is greater, the basic model is in compliance and testing is at an end.

ALTERNATE PROCEDURE FOR DETERMINATION OF UCL, LCL, AND n_2, IN LIEU OF EQUATIONS (4), (5), (6) and (10).

The alternate procedure gives the values of the upper and lower confidence limits for numbers of units tested and the minimum size of the second sample, in lieu of computing the values with equations (4), (5), (6) and (10) of the primary procedure. The values that are obtained by utilizing the alternate procedure and Tables A-1 through A-4 are substituted for the appropriate equations in the primary method. The appropriate steps of the primary procedure are then continued.

The derivations of the tables used in this "Alternate Procedure" are given in Appendix G of TSD #3, Certification and Enforcement Analysis.

Table A-1 may be used to determine an acceptable value for the UCL in lieu of equation (4) as follows:

(a) Calculate the coefficient of variation of the measured efficiencies for the sample by dividing the standard deviation by the sample mean.

(b) Find the appropriate range of values for the calculated coefficient of variation in Table A-1.

(c) Select the appropriate value on Table A-1 corresponding to the range of coefficients of variation and the first sample size. This value is expressed as the ratio of the UCL to the applicable energy efficiency standard level.

(d) Determine the approximate UCL by multiplying the applicable energy efficiency standard level by the value obtained in (c) above.

If the sample mean is less than the UCL calculated in (d) above, but greater than the UCL calculated by using the table value corresponding to its immediate left, the manufacturer shall use Step 5 of the primary procedure to obtain the UCL.

The LCL may be determined in the same manner using Tables A-2 and A-3. For sample sizes or values of coefficients of variation greater than the values in Tables A-1, A-2 and A-3, the primary procedure shall be used to obtain the UCL and LCL.

Table A-4 may be used to obtain the minimum second sample size as follows:

(a) Calculate the coefficient of variation of the measured efficiencies for the first sample by dividing the standard deviation of the first sample by the first sample mean.

(b) Find the appropriate range of the coefficient of variation in the Table.

(c) Determine the minimum total sample size corresponding to that range of the coefficient of variation.

(d) Subtract the first sample size from the minimum total sample size to determine the minimum second sample size.

TABLE A-1

UPPER CONFIDENCE LIMIT (AS A RATIO OF THE MEAN STANDARD) AFTER TESTING FIRST SAMPLE

Number of Units	Coefficient of Variation									
	0.000-0.019	0.020-0.029	0.030-0.039	0.040-0.049	0.050-0.059	0.060-0.069	0.070-0.079	0.080-0.089	0.090-0.099	0.100-0.149
4	1.016	1.032	1.048	1.064	1.080	1.095	1.111	1.127	1.143	1.159
5	1.012	1.025	1.037	1.050	1.062	1.074	1.087	1.099	1.112	1.124
6	1.010	1.021	1.031	1.042	1.052	1.063	1.073	1.084	1.094	1.105
7	1.009	1.018	1.028	1.037	1.046	1.055	1.065	1.074	1.083	1.092
8	1.008	1.017	1.025	1.033	1.042	1.050	1.059	1.067	1.075	1.084
9	1.008	1.015	1.023	1.031	1.038	1.046	1.054	1.061	1.069	1.077
10	1.007	1.014	1.021	1.029	1.036	1.043	1.050	1.057	1.064	1.072
11	1.007	1.013	1.020	1.027	1.034	1.040	1.047	1.054	1.060	1.067
12	1.006	1.013	1.019	1.025	1.032	1.038	1.044	1.051	1.057	1.064
13	1.006	1.012	1.018	1.024	1.030	1.036	1.042	1.048	1.054	1.060
14	1.006	1.012	1.017	1.023	1.029	1.035	1.040	1.046	1.052	1.058
15	1.006	1.011	1.017	1.022	1.028	1.033	1.039	1.044	1.050	1.055
16	1.005	1.011	1.016	1.021	1.027	1.032	1.037	1.043	1.048	1.053
17	1.005	1.010	1.015	1.021	1.026	1.031	1.036	1.041	1.046	1.051
18	1.005	1.010	1.015	1.020	1.025	1.030	1.035	1.040	1.045	1.050
19	1.005	1.010	1.014	1.019	1.024	1.029	1.034	1.039	1.043	1.048
20	1.005	1.009	1.104	1.019	1.023	1.028	1.033	1.037	1.042	1.047

NOTE: The range of values of coefficient of variation should be read as follows: "greater than" the first value, and "no greater than" the second value.

This table was prepared with a one-tailed confidence level of 97.5 percent, two-tailed confidence level of 95.0 percent, and a tolerance limit of 5.0 percent.

TABLE A-2

LOWER CONFIDENCE LIMIT (AS A RATIO OF THE MEAN STANDARD) AFTER TESTING FIRST SAMPLE BUT BEFORE REQUIRED MINIMUM NUMBER OF UNITS HAVE BEEN SAMPLED

Number of Units	Coefficient of Variation*									
	.001 - .019	0.020 - 0.029	0.030 - 0.039	0.040 - 0.049	0.050 - 0.059	0.060 - 0.069	0.070 - 0.079	0.080 - 0.089	0.090 - 0.099	0.100 - 0.150
4	0.984	0.968	0.952	0.936	0.920	0.905	0.889	0.873	0.857	0.841
5	0.988	0.975	0.963	0.950	0.938	0.926	0.913	0.901	0.888	0.876
6	0.990	0.979	0.969	0.958	0.948	0.937	0.927	0.916	0.906	0.895
7	0.991	0.982	0.972	0.963	0.954	0.945	0.935	0.926	0.917	0.908
8	0.992	0.983	0.975	0.967	0.958	0.950	0.941	0.933	0.925	0.916
9	0.992	0.985	0.977	0.969	0.962	0.954	0.946	0.939	0.931	0.923
10	0.993	0.986	0.979	0.971	0.964	0.957	0.950	0.943	0.936	0.928
11	0.993	0.987	0.980	0.973	0.966	0.960	0.953	0.946	0.940	0.933
12	0.994	0.987	0.981	0.975	0.968	0.962	0.956	0.949	0.943	0.936
13	0.994	0.988	0.982	0.976	0.970	0.964	0.958	0.952	0.946	0.940
14	0.994	0.988	0.983	0.977	0.971	0.965	0.960	0.954	0.948	0.942
15	0.994	0.989	0.983	0.978	0.972	0.967	0.961	0.956	0.950	0.945
16	0.995	0.989	0.984	0.979	0.973	0.968	0.963	0.957	0.952	0.947
17	0.995	0.990	0.985	0.979	0.974	0.969	0.964	0.959	0.954	0.949
18	0.995	0.990	0.985	0.980	0.975	0.970	0.965	0.960	0.955	0.950
19	0.995	0.990	0.986	0.981	0.976	0.971	0.966	0.961	0.957	0.952
20	0.995	0.991	0.986	0.981	0.977	0.972	0.967	0.963	0.958	0.953

*The range of values of coefficient of variation should be read as follows: "no less than" the first value and "less than" the second value.
This table was prepared with a one-tailed confidence level of 97.5 percent, two-tailed confidence level of 95.0 percent and a tolerance limit of 5.0 percent.

TABLE A-3

LOWER CONFIDENCE LIMIT (AS A RATIO OF THE MEAN STANDARD) OR MINIMUM SAMPLE MEAN REQUIRED FOR COMPLIANCE AFTER TESTING THE REQUIRED MINIMUM NUMBER OF UNITS

Number of Test Units ($n_1 + n_2$)	Coefficient of Variation*									
	.001 - .019	0.020 - 0.029	0.030 - 0.039	0.040 - 0.049	0.050 - 0.059	0.060 - 0.069	0.070 - 0.079	0.080 - 0.089	0.090 - 0.099	0.100 - 0.150
4	0.984	0.968	0.952	0.936	0.920	0.905	0.900	0.900	0.900	0.900
5	0.988	0.975	0.963	0.950	0.938	0.926	0.913	0.901	0.900	0.900
6	0.990	0.979	0.969	0.958	0.948	0.937	0.927	0.916	0.906	0.900
7	0.991	0.982	0.972	0.963	0.954	0.945	0.935	0.926	0.917	0.908
8	0.992	0.983	0.975	0.967	0.958	0.950	0.941	0.933	0.025	0.916
9	0.992	0.985	0.977	0.969	0.962	0.954	0.946	0.939	0.931	0.923
10	0.993	0.986	0.979	0.971	0.964	0.957	0.950	0.943	0.936	0.928
11	0.993	0.987	0.980	0.973	0.966	0.960	0.053	0.046	0.940	0.933
12	0.994	0.987	0.981	0.975	0.968	0.962	0.956	0.949	0.943	0.936
13	0.994	0.988	0.982	0.976	0.970	0.964	0.958	0.952	0.946	0.940
14	0.994	0.988	0.983	0.977	0.971	0.965	0.960	0.954	0.948	0.942
15	0.994	0.989	0.983	0.978	0.972	0.967	0.961	0.956	0.950	0.945
16	0.995	0.989	0.984	0.979	0.973	0.968	0.963	0.957	0.952	0.947
17	0.995	0.990	0.985	0.979	0.974	0.969	0.964	0.959	0.954	0.949
18	0.995	0.990	0.985	0.980	0.975	0.970	0.965	0.960	0.955	0.950
19	0.995	0.990	0.986	0.981	0.976	0.971	0.966	0.961	0.957	0.952
20	0.995	0.991	0.986	0.981	0.977	0.972	0.967	0.963	0.958	0.953

* The range of values of coefficient of variation should be read as follows: "no less than" the first value and "less than" the second value.
This table was prepared with a one-tailed confidence level of 97.5 percent, two-tailed confidence level of 95.0 percent and a tolerance limit of 5.0 percent.

TABLE A-4

TOTAL SAMPLE SIZES (N_1+N_2) REQUIRED FOR COMPLIANCE TESTING

COEFFICIENT OF VARIATION GREATER THAN	but NO GREATER THAN	MINIMUM SAMPLE SIZE REQUIRED FOR CERTIFICATION WITH TABLE E-3 VALUES
0 00	0 02	4
0 02	0 03	4
0 03	0.04	5
0 04	0 05	7
0 05	0 06	8
0 06	0 07	10
0 07	0 08	13
0 08	0 09	15
0 09	0 10	18
0 10	0 12*	20

* FOR VALUES GREATER THAN 0 12, USE THE METHOD GIVEN IN THE PRIMARY APPROACH

TABLE A-5

VALUES OF t-STATISTIC FOR ONE-SIDED 97 5% CONFIDENCE LEVELS AND TWO-SIDED 95% CONFIDENCE LEVELS

Total Number of Units (n_1+n_2)	t-value
2	12 706
3	4 303
4	3 182
5	2 776
6	2 571
7	2 447
8	2 365
9	2 306
10	2 262
11	2 228
12	2 201
13	2 179
14	2 160
15	2 145
16	2 131
17	2 120
18	2 110
19	2 101
20	2 093
22	2 080
24	2 069
26	2 060
28	2 052
30	2 045
36	2 030
41	2 021
46	2 014
51	2,008
56	2 004
61	2 000
71	1 994
81	1 989
91	1 986
101	1 982
∞	1 9600

Source: Paul G. Hoel, Elementary Statistics, John Wiley & Sons, Inc , New York, 1960, Table IV , p 243

APPENDIX B: REQUIRED INFORMATION AND FORMAT FOR THE CERTIFICATION REPORT, CONDITIONAL CERTIFICATION REPORT AND POST-CERTIFICATION REPORT

The required information and formats for the certification report, conditional certification report, and post-certification report--including the cover sheet, compliance statement (for certification and conditional certification reports) and body of the reports--are given in this appendix. The body of the reports is different for each product. There are no product-to-product differences in the forms of the other parts of the reports. The products covered in this appendix include:

(1) Furnaces and Boilers.

(2) Water Heaters.

(3) Refrigerators and Refrigerator-freezers.

(4) Kitchen Ranges and Ovens.

(5) Central Air Conditioners.

(6) Clothes Dryers.

(7) Room Air conditioners.

(8) Freezers.

COVER SHEET

(for Manufacturers)

_____
Model No. of Model Tested

PRODUCT: _____

Submit by Certified Mail to:
Department of Energy
Consumer Products Efficiency Branch
Forrestal Building
Mail Stop GN095
1000 Independence Avenue, S.W.
Washington, D.C. 20585
Attention: James Smith

TYPE OF SUBMITTAL (check one)

____ Conditional Certification Report

____ Certification Report

____ Post-Certification Report

NAME and ADDRESS of MANUFACTURER

_____

_____

_____

BASIC MODEL COVERED IN THIS SUBMITTAL

1. _____

Manufactured, Private Labeled or both (Specify and name private labeler, if applicable, providing address below)

1. _____

NAME and ADDRESS of PRIVATE LABELER, (if applicable)

_____

_____

_____

NAMES, ADDRESSES and PHONE NUMBERS OF INDIVIDUAL(S) responsible for:

	a. DOE LIAISON	b. EFFICIENCY TESTING	c. NON-TEST INFORMATION
Name:			
address:			
phone no:			

Signed _____ Date _____

COVER SHEET

(for Private Labelers)

_____
Model No of Model Tested

PRODUCT: _____

Submit by Certified Mail to:
Department of Energy
Consumer Products Efficiency Branch
Forrestal Building
Mail Stop GN095
1000 Independence Avenue, S W
Washington, D C 20585
Attention: James Smith

TYPE OF SUBMITTAL (check one)

_____ Conditional Certification Report

_____ Certification Report

_____ Post-Certification Report

NAME and ADDRESS of PRIVATE LABELER

_____

_____

_____

BASIC MODEL COVERED IN THIS SUBMITTAL

1 _____

MANUFACTURER (Specify and provide address below)

1 _____

NAME and ADDRESS of MANUFACTURER

_____

_____

_____

NAMES, ADDRESSES and PHONE NUMBERS OF INDIVIDUAL(S) responsible for:

	a DOE LIAISON	b EFFICIENCY TESTING	c NON-TEST INFORMATION
Name:			
address:			
phone no:			

Signed _____ Date _____

Compliance Statement to be included in a Certification Report:

_____
Model No of Model Tested

This report is submitted pursuant to Part 430 (Energy Conservation Program for Consumer Products) of the Energy Policy and Conservation Act (Public Law 94-163), and amendments thereto The basic model included in this report complies with the applicable energy efficiency standards; and all batches of the basic model, including all models and all configurations within the basic model are represented by the units reported in this certification report and comply with the applicable energy efficiency standards All testing for which data are reported in this certification report was conducted in conformance with the applicable test requirements prescribed in Subparts B and F of 10 CFR 430 All test data reported in this report is true, accurate and complete The units tested are representative of production units with respect to all energy performance characteristics All certification requirements of Subpart F of 10 CFR 430 shall be completed, including the submittal of a certification report, pursuant to the schedule set forth in Section 430 64 of 10 CFR 430 I am aware of the penalties contained in Section 333 of the Act and 10 CFR § 430 76 pertaining to violation of Section 332 of the Act (Prohibited Acts) and am also aware of the provisions contained in 18 USC § 1001 with regard to criminal sanctions involving false statements

_____ Date _____ Individual Responsible for Energy Efficiency Testing

_____ Date _____ Individual Responsible for Non-Test Information

Compliance Statement to be included in a Conditional Certification Report:

_____
Model No. of Model Tested

This report is submitted pursuant to Part 430 (Energy Conservation Program for Consumer Products) of the Energy Policy and Conservation Act (Public Law 94-163), and amendments thereto. The basic model included in this report complies with the applicable energy efficiency standards; and all batches of the basic model, including all models and all configurations within the basic model, are represented by the units reported in this conditional certification report and comply with the applicable energy efficiency standards. All testing for which data are reported in this conditional certification report was conducted in conformance with the applicable test requirements prescribed in Subparts B and F of 10 CFR 430. All test data reported in this conditional report is true, accurate, and complete. The units tested are representative of production units with respect to all energy performance characteristics. All certification requirements of Subpart F of 10 CFR 430 shall be completed, including the submittal of a certification report, pursuant to the schedule set forth in Section 430.64 of 10 CFR 430. I am aware of the penalties contained in Section 333 of the Act and 10 CFR § 430.76 pertaining to violation of Section 332 of the Act (Prohibited Acts) and am also aware of the provisions contained in 18 USC § 1001 with regard to criminal sanctions involving false statements.

_____ _____
Date Individual Responsible for Energy Efficiency Testing

_____ _____
Date Individual Responsible for Non-Test Information

(1) Furnaces
REQUIRED CERTIFICATION REPORT FORM (Sheet 1 of)
(To be used for all Certification, Conditional Certification and Post Certification Reports)

_____
Model No. of Model Tested

_____
Manufacturer

_____
Date of Submittal

NOTE: File one set of forms for each basic model to which a sampling plan applies.

I. MODEL SPECIFIC INFORMATION

A. Basic Model Description

1. Product: Furnaces

2. Product Class (Check One)

____a. Gas, gravity
____b. Gas, forced air, indoor
____c. Gas, forced air, outdoor, non-weatherproof horizontal
____d. Gas, forced air, outdoor, other than non-weatherproof horizontal
____e. Gas, boiler, indoor
____f. Gas, boiler, outdoor
____g. Oil, forced air, indoor
____h. Oil, forced air, outdoor, non-weatherproof horizontal
____i. Oil, forced air, outdoor, other than non-weatherproof horizontal
____j. Oil, boiler, indoor
____k. Oil, boiler, outdoor

3. Basic Model information

a. Basic Model "Descriptor" (Model Number of Model Tested)* _____

b. Rated Annual Fuel Utilization Efficiency (AFUE)
1) As determined Using DOE Test Procedures _____
2) As determined for FTC Labeling Program _____

c. Nameplate Input and Rated Capacity
1) Nameplate Input _____
2) Rated Capacity (Q_{out}) _____

d. Heat Exchanger Configuration _____

e. Heat Exchanger Material _____

f. Source of Combustion Air _____

g. Energy - Related Options or other features which affect the measure of efficiency _____
_____
_____

h. Estimated Annual Energy Consumption (as determined for the DOE Test Procedure)
1) Average Annual Fuel Energy Consumption _____
2) Average Annual Auxiliary Electrical Energy Consumption _____

i. Estimated Annual Energy Cost (as determined for the FTC Labeling Program) _____

*Use this designator as cross-reference to all following pages of submittal.

(1) Furnaces
REQUIRED CERTIFICATION REPORT FORM (Sheet 2 of)

Model No of Model Tested

I MODEL SPECIFIC INFORMATION (Con t)
A Basic Model Description (Con't)

4 Model Numbers/Serial Numbers Grouped with this Basic Model

Model Numbers	Starting /Serial Nos	Brand Name	Carry-over or Replacement**	Replaced Model No **
1	/	1	1	1
2	/	2	2	2
3	/	3	3	3
4	/	4	4	4
5	/	5	5	5
6	/	6	6	6

4a Codes for Serial Numbers to allow determination of Date of Manufacture

_____
_____
_____
_____

**If this is a carry-over or replacement model so indicate, otherwise leave blank

(1) Furnaces
REQUIRED CERTIFICATION REPORT FORM (Sheet 3 of)

Model No of Model Tested

I MODEL SPECIFIC INFORMATION (Con t)
B Production Information

1 Location of all manufacturing facilities producing this basic model
a _____ b _____

2 Production Schedule, by facility

		Facility a	Facility b
a Number of production runs planned for the next 12 months			
b Beginning and end dates for each production run	Run 1	to	to
	Run 2	to	to
	Run 3	to	to
	Run 4	to	to

c Estimated total annual production for current year
1) less than 200 units _____
2) 200 to 1000 _____
3) more than 1000 _____

3 Critical Component Suppliers (With component type or description)

Item	Supplier(s)	Type or Description
a Heat Exchanger		
b Burners		
c Electronic ignition device		
d Stack damper		
e Fan/Motor		
f Other distinct energy-related components		

C Test Program Information

1 Location of Test facilities
a Owned by Company
b Independent Test Laboratory (if used)

2 Percent of Production units to be tested for energy efficiency
a Using DOE test procedures _____
b Using other test procedures (specify procedures) _____

D Other Information (use separate sheet)

(1) Furnaces
REQUIRED CERTIFICATION REPORT FORM (Sheet 4 of)

_____
Model No. of Model Tested

II. SUMMARY OF CERTIFICATION TEST DATA

A. Energy efficiency rating for the Model
1. Model Number of Model Tested _____
2. Rated Annual Fuel Utilization Efficiency (AFUE) _____
3. If this is a replacement model, give model number and rated AFUE of the prior model _____
Model Number/AFUE

B. Description of sample used to obtain ratings
1. Batch Size
2. Type of Units Tested (Check One)
____a. Production Units
____b. Other (Describe _____)

C. Location where test units were manufactured _____ Location where test units were tested _____

D. Location of underlying test data _____

E. Summary Test Statistics
1 First Sample
____a. Sample Size
____b. Mean Efficiency
____c Standard Deviation
____d. Upper Confidence Limit
____e. Lower Confidence Limit
2. Total Sample (If second sample required)
____a. Sample Size
____b. Mean Efficiency
____c. Standard Deviation
____d. Lower Confidence Limit

F. Test Results (for each unit tested)

Test Unit	Test Date(s)	Serial No	Steady State Efficiency	AFUE
1.				
2.				
3.				
4.				
5.				
6.				

(2) Water Heaters
REQUIRED CERTIFICATION REPORT FORM (Sheet 1 of)
(To be used for all Certification, Conditional Certification and Post Certification Reports)

_____
Model No. of Model Tested
_____
Manufacturer
_____
Date of Submittal

NOTE: File one set of forms for each basic model to which a sampling plan applies.

I. MODEL SPECIFIC INFORMATION

A. Basic Model Description

1. Product: Water Heaters

2. Product Class (Check One)
____a. Electric
____b. Gas
____c. Oil

3. Basic Model information
a. Basic Model "Descriptor" (Model Number of Model Tested)* _____
b. Rated Energy Factor (EF)
1) As determined Using DOE Test Procedures _____
2) As determined for FTC Labeling Program _____
c. Rated recovery efficiency _____
d. Rated standby loss _____
e. Rated first hour rating _____
f. Rated Storage Capacity _____
g Rated power input _____
h Energy Related Options or other features which affect the measure of efficiency _____
i Estimated Annual Energy Consumption (as determined for the FTC Labeling Program) _____
j Estimated Annual Energy Cost (as determined for the FTC Labeling Program) _____

*Use this designator as cross-reference to all following pages of submittal.

(2) Water Heaters
REQUIRED CERTIFICATION REPORT FORM (Sheet 2 of)

Model No of Model Tested

I MODEL SPECIFIC INFORMATION (Con t)
A Basic Model Description (Con't)

4 Model Numbers/Serial Numbers Grouped with this Basic Model

Model Numbers	Starting /Serial Nos	Brand Name	Carry-over or Replacement**	Replaced Model No **
1	/	1	1	1
2	/	2	2	2
3	/	3	3	3
4	/	4	4	4
5	/	5	5	5
6	/	6	6	6
7	/	7	7	7
8	/	8	8	8
9	/	9	9	9
10	/	10	10	10
11	/	11	11	11
12	/	12	12	12

4d Codes for Serial Numbers to allow determination of Date of Manufacture

_____

_____

_____

_____

**If this is a carry-over or replacement model so indicate otherwise leave blank

(2) Water Heaters
REQUIRED CERTIFICATION REPORT FORM (Sheet 3 of)

Model No of Model Tested

I MODEL SPECIFIC INFORMATION (Con't)
B Production Information

1 Location of all manufacturing facilities producing this basic model
a _____ b _____

2 Production Schedule, by facility

		Facility a	Facility b
a Number of production runs planned for the next 12 months		_____	_____
b Beginning and end dates for each production run	Run 1	to	to
	Run 2	to	to
	Run 3	to	to
	Run 4	to	to

c Estimated total annual production for current year
1) less than 200 units _____
2) 200 to 1000 _____
3) more than 1000 _____

3 Critical Component Suppliers (With component type or description)

Item	Supplier(s)	Type or Description
a Water tank		
b Heating elements		
c Main burner		
d Pilot burner		
e Thermostatic valve		
f Flue baffle		
g Insulating materials		
h Dip tube/diffuser		
i Gas pressure regulators		
j Other distinct energy-related components		

C Test Program Information

1 Location of Test facilities
a Owned by Company _____ b Independent Test Laboratory (if used) _____

2 Percent of Production units to be tested for energy efficiency
a Using DOE test procedures _____
b Using other test procedures (specify procedures) _____

D Other Information (use separate sheet)

(2) Water Heaters
REQUIRED CERTIFICATION REPORT FORM (Sheet 4 of)

_____
Model No. of Model Tested

II. SUMMARY OF CERTIFICATION TEST DATA

A. Energy efficiency rating for the Model
1. Model Number of Model Tested _____
2. Rated Energy Factor (EF) _____
3. If this is a replacement model, give model number and rated EF of the prior model _____
Model Number/EF

B. Description of sample used to obtain ratings
1. Batch Size
2. Type of Units Tested (Check One)
____a. Production Units
____b. Other (Describe _____)

C. Location where test units were manufactured _____ Location where test units were tested _____

D. Location of underlying test data _____

E. Summary Test Statistics
1. First Sample
____a. Sample Size
____b. Mean Efficiency
____c. Standard Deviation
____d. Upper Confidence Limit
____e. Lower Confidence Limit
2 Total Sample (If second sample required).
____a. Sample Size
____b. Mean Efficiency
____c. Standard Deviation
____d. Lower Confidence Limit

F. Test Results (for each unit tested)

Test Unit	Test Date(s)	Serial No.*	EF
1.			
2.			
3.			
4.			
5.			
6.			
7.			
8.			
9.			

(3) Refrigerators and Refrigerator-Freezers
REQUIRED CERTIFICATION REPORT FORM (Sheet 1 of).
(To be used for all Certification, Conditional Certification, and Post Certification Reports)

_____
Model No. of Model Tested
_____
Manufacturer
_____
Date of Submittal

NOTE: File one set of forms for each basic model to which a sampling plan applies.

I. MODEL SPECIFIC INFORMATION

A. Basic Model Description

1. Product: Refrigerators and refrigerator - freezers

2. Product Class (Check One)
____a. Electric refrigerator, manual defrost
____b. Electric refrigerator-freezer, manual defrost freezer
____c. Electric refrigerator-freezer, automatic defrost with top freezer
____d. Electric refrigerator-freezer, automatic defrost with side freezer
____e. Electric refrigerator-freezer, automatic defrost with bottom freezer
____f. Electric refrigerator-freezer, automatic defrost with top freezer and through-the-door ice or liquid service
____g. Electric refrigerator-freezer, automatic defrost with side freezer and through-the-door ice or liquid service

3. Basic Model information
a. Basic Model "Descriptor" (Model Number of Model Tested)* _____
b. Rated Energy Factor (EF)
1) As determined Using DOE Test Procedures _____
2) As determined for FTC Labeling Program _____
c. Rated Capacity (cu. ft.)
1) Net refrigerated volume _____
2) Adjusted Total volume _____
d. Electrical Rating - voltage _____
e. Energy - Related Options or other features which affect the measure of efficiency _____
f. Estimated Annual Energy Consumption (as determined for the FTC Labeling Program) _____
g. Estimated Annual Energy Cost (as determined for the FTC Labeling Program) _____

*Use this designator as cross-reference to all following pages of submittal.

(3) Refrigerators and Refrigerator-Freezers
REQUIRED CERTIFICATION REPORT FORM (Sheet 2 of)

Model No of Model Tested

I MODEL SPECIFIC INFORMATION (Con't)
A Basic Model Description (Con't)

4 Model Numbers/Serial Numbers Grouped with this Basic Model

Model Numbers	Starting /Serial Nos	Brand Name	Carry-over or Replacement**	Replaced Model No **
1	/	1,	1	1
2	/	2,	2	2
3	/	3,	3	3
4	/	4,	4	4
5	/	5,	5	5
6	/	6	6	6
7	/	7	7	7
8	/	8	8	8
9	/	9	9,	9
10	/	10	10	10
11	/	11,	11	11
12	/	12	12	12

4d Codes for Serial Numbers to allow determination of Date of Manufacture

_____

_____

_____

_____

**If this is a carry-over or replacement model so indicate, otherwise leave blank

(3) Refrigerators and Refrigerator-Freezers
REQUIRED CERTIFICATION REPORT FORM (Sheet 3 of)

Model No of Model Tested

I MODEL SPECIFIC INFORMATION (Con't)
B Production Information

1 Location of all manufacturing facilities producing this basic model
a _____ b _____

2 Production Schedule, by facility

		Facility a	Facility b
a Number of production runs planned for the next 12 months		_____	_____
b Beginning and end dates for each production run	Run 1	to	to
	Run 2	to	to
	Run 3	to	to
	Run 4	to	to

c Estimated total annual production for current year
1) less than 200 units _____
2) 200 to 1000 _____
3) more than 1000 _____

3 Critical Component Suppliers (With component type or description)

Item	Supplier(s)	Type or Description
a Compressor/Motor		
b Condenser/Coil		
c Condenser fan motor		
d Evaporator		
e Heat exchanger (Interchanger)		
f Door seals		
g Insulating materials		
h Defrost control		
i Refrigerant		
j Anti-sweat heater		
k Other distinct energy-related components		

C Test Program Information
1 Location of Test facilities
a Owned by Company b, Independent Test Laboratory (if used)

_____ _____

_____ _____

_____ _____

2 Percent of Production units to be tested for energy efficiency
a Using DOE test procedures _____
b Using other test procedures (specify procedures) _____

D Other Information (use separate sheet)

(3) Refrigerators and Refrigerator-Freezers
REQUIRED CERTIFICATION REPORT FORM (Sheet 4 of)

_____
Model No. of Model Tested

II. SUMMARY OF CERTIFICATION TEST DATA

A. Energy efficiency rating for the Model
1. Model Number of Model Tested _____
2. Rated Energy Factor (EF) _____
3. If this is a replacement model, give model number and rated EF of the prior model _____
Model Number/EF

B. Description of sample used to obtain ratings
1. Batch Size
2. Type of Units Tested (Check One)
____a. Production Units
____b. Other (Describe _____)

C. Location where test units were manufactured _____ Location where test units were tested _____

D. Location of underlying test data _____

E. Summary Test Statistics
1. First Sample
____a. Sample Size
____b. Mean Efficiency
____c. Standard Deviation
____d. Upper Confidence Limit
____e. Lower Confidence Limit
2. Total Sample (If second sample required).
____a. Sample Size
____b. Mean Efficiency
____c. Standard Deviation
____d. Lower Confidence Limit

F. Test Results (for each unit tested)

Test Unit	Test Date(s)	Serial No.	EF
1.			
2.			
3.			
4.			
5.			
6.			
7.			
8.			
9.			

(4) Kitchen Ranges and Ovens
REQUIRED CERTIFICATION REPORT FORM (Sheet 1 of)
(To be used for all Certification, Conditional Certification and Post Certification Reports)

_____
Model No. of Model Tested
_____
Manufacturer
_____
Date of Submittal

NOTE: File one set of forms for each basic model to which a sampling plan applies.

I. MODEL SPECIFIC INFORMATION

A. Basic Model Description

1. Product: Kitchen ranges and ovens

2. Product Class (Check One)
____a. Microwave oven
____b. Electric cooking top
____c. Electric oven
____d. Electric oven, self cleaning
____e. Gas cooking top
____f. Gas oven
____g. Gas oven, self cleaning

3. Basic Model information
a. Basic Model "Descriptor" (Model Number of Model Tested)* _____
b. Rated Energy Factor (EF)
1) As determined Using DOE Test Procedures _____
c. Capacity (total width, in inches) _____
d. Electric Ratings
1)Amperage ____ 2)Voltage ____ 3)Wattage _____
e. Energy type of each component
f. Design features of oven (conventional or microwave)
1) Volume of cooking cavity _____
2) Ignition type (gas only) _____
3) Forced convection (gas) _____
4) Clock _____
g. Design features of cooking tops
1) Number of cooking surfaces _____
2) Exposed heating elements or burners
3) Smooth _____
4) Electric ignition (gas only) _____
h. Design features of ranges
1) Number of ovens _____
2) For oven portion, fill in f, above
3) For top portion, fill in g, above

*Use this designator as cross-reference to all following pages of submittal.

(4) Kitchen Ranges and Ovens
REQUIRED CERTIFICATION REPORT FORM (Sheet 2 of)

Model No of Model Tested

I MODEL SPECIFIC INFORMATION (Con't)
A Basic Model Description (Con't)

4 Model Numbers/Serial Numbers Grouped with this Basic Model

Model Numbers	Starting /Serial Nos	Brand Name	Carry-over or Replacement**	Replaced Model No **
1	/	1	1	1
2	/	2	2	2
3	/	3	3	3
4	/	4	4	4
5	/	5	5	5
6	/	6	6	6
7	/	7	7	7
8	/	8	8	8
9	/	9	9	9
10	/	10	10	10
11	/	11	11	11
12	/	12	12	12

4d. Codes for Serial Numbers to allow determination of Date of Manufacture

_____

_____

_____

_____

**If this is a carry-over or replacement model so indicate, otherwise leave blank

(4) Kitchen Ranges and Ovens
REQUIRED CERTIFICATION REPORT FORM (Sheet 3 of)

Model No of Model Tested

I MODEL SPECIFIC INFORMATION (Con't)
B Production Information

1 Location of all manufacturing facilities producing this basic model
a _____ b _____

2 Production Schedule, by facility

		Facility a	Facility b
a Number of production runs planned for the next 12 months		____	____
b Beginning and end dates for each production run	Run 1	to	to
	Run 2	to	to
	Run 3	to	to
	Run 4	to	to

c Estimated total annual production for current year
1) less than 200 units ____
2) 200 to 1000 ____
3) more than 1000 ____

3 Critical Component Suppliers (With component type or description)

Item	Supplier(s)	Type or Description
a Heating Elements		
b Control Systems		
c Microwave Generator		
d Automatic Ignition		
e Timers		
f Thermostats		
g Insulation		
h Other distinct energy-related components		

C Test Program Information

1 Location of Test facilities
a Owned by Company
b Independent Test Laboratory (if used)

2 Percent of Production units to be tested for energy efficiency
a Using DOE test procedures ____
b Using other test procedures (specify procedures) ____

D Other Information (use separate sheet)

(4) Kitchen Ranges and Ovens
REQUIRED CERTIFICATION REPORT FORM (Sheet 4 of)

_____
Model No. of Model Tested

II. *SUMMARY OF CERTIFICATION TEST DATA*

A. Energy efficiency rating for the Model
1. Model Number of Model Tested _____
2. Rated Energy Factor (EF) _____
3. If this is a replacement model, give model number and rated EF of the prior model _____
Model Number/EF

B. Description of sample used to obtain ratings
1. Batch Size
2. Type of Units Tested (Check One)
____a. Production Units
____b. Other (Describe _____)

C. Location where test units were manufactured _____ Location where test units were tested _____

D. Location of underlying test data _____

E. Summary Test Statistics
1. First Sample
____a. Sample Size
____b. Mean Efficiency
____c. Standard Deviation
____d. Upper Confidence Limit
____e. Lower Confidence Limit
2. Total Sample (If second sample required).
____a. Sample Size
____b. Mean Efficiency
____c. Standard Deviation
____d. Lower Confidence Limit

F. Test Results (for each unit tested)

Test Unit	Test Date(s)	Serial No.	EF
1.			
2.			
3.			
4.			
5.			
6.			
7.			
8.			
9.			

(5) Central Air Conditioners
REQUIRED CERTIFICATION REPORT FORM (Sheet 1 of)
(To be used for all Certification, Conditional Certification and Post Certification Reports)

_____
Model No. of Model Tested
_____
Manufacturer
_____
Date of Submittal

NOTE: File one set of forms for each basic model to which a sampling plan applies.

I. MODEL SPECIFIC INFORMATION

A. Basic Model Description

1. Product: Central Air Conditioners

2. Product Class (Check One)
____a. Split system-cooling only
____b. Single package-cooling only
____c. Air source, Split system, heat pump
____d. Air source, Single package, heat pump
____e. Air source, Split system, heating only heat pump

3. Basic Model information
a. Basic Model "Descriptor" (Model Number of Model Tested)* _____
b. Rated Seasonal Energy Efficiency Ratio (SEER)
1) As determined Using DOE Test Procedures _____
2) As determined for FTC Labeling Program _____
c. Cooling Capacity (BTU/hr) _____
d. Electrical Ratings
1) Amperage____ 2) Voltage ____ 3) Wattage _____
e. Condenser Fan Speed(s) _____
f. Inside Air Moving Fan Speed(s) _____
g. Type of Unit (per DOE Test Procedure) _____
h. Energy Related Options or other features which affect the measure of efficiency _____
i. Estimated Annual Operating Cost _____

*Use this designator as cross-reference to all following pages of submittal.

(5) Central Air Conditioners
REQUIRED CERTIFICATION REPORT FORM (Sheet 2 of)

Model No of Model Tested

I MODEL SPECIFIC INFORMATION (Con t)
A Basic Model Description (Con't)

4 Model Numbers/Serial Numbers Grouped with this Basic Model

Model Numbers	Starting /Serial Nos	Brand Name	Carry-over or Replacement**	Replaced Model No.**
1	/	1	1	1
2	/	2	2	2
3	/	3	3	3
4	/	4	4	4
5	/	5	5	5
6	/	6	6	6
7	/	7	7	7
8	/	8	8	8
9	/	9	9	9
10	/	10	10	10
11	/	11	11	11
12	/	12	12	12

4d Codes for Serial Numbers to allow determination of Date of Manufacture

_____

_____

_____

_____

**If this is a carry-over or replacement model so indicate, otherwise leave blank

(5) Central Air Conditioners
REQUIRED CERTIFICATION REPORT FORM (Sheet 3 of)

Model No of Model Tested

I MODEL SPECIFIC INFORMATION (Con't)
B Production Information

1 Location of all manufacturing facilities producing this basic model
a _____ b _____

2 Production Schedule, by facility

		Facility a	Facility b
a Number of production runs planned for the next 12 months		_____	_____
b Beginning and end dates for each production run	Run 1	to	to
	Run 2	to	to
	Run 3	to	to
	Run 4	to	to

c Estimated total annual production for current year
1) less than 200 units _____
2) 200 to 1000 _____
3) more than 1000 _____

3 Critical Component Suppliers (With component type or description)

Item	Supplier(s)	Type or Description
a Compressor(s)	_____	_____
b Compressor motor	_____	_____
c Condenser Coil	_____	_____
d Condenser fan/motor unit	_____	_____
e Evaporator Coil	_____	_____
f Evaporator fan/motor unit	_____	_____
g Refrigerant	_____	_____
h Other distinct energy-related components	_____	_____

C Test Program Information

1 Location of Test facilities
a Owned by Company _____
b Independent Test Laboratory (if used) _____

2 Percent of Production units to be tested for energy efficiency
a Using DOE test procedures _____
b Using other test procedures (specify procedures) _____

D Other Information (use separate sheet)

(5) Central Air Conditioners
REQUIRED CERTIFICATION REPORT FORM (Sheet 4 of)

_____
Model No. of Model Tested

II. SUMMARY OF CERTIFICATION TEST DATA

A. Energy efficiency rating for the Model
1. Model Number of Model Tested _____
2. Rated Seasonal Energy Efficiency Ratio (SEER) _____
3. If this is a replacement model, give model number and rated SEER of the prior model _____
Model Number/SEER

B. Description of sample used to obtain ratings
1. Batch Size
2. Type of Units Tested (Check One)
____a. Production Units
____b. Other (Describe _____)

C. Location where test units were manufactured _____ Location where test units were tested _____

D. Location of underlying test data _____

E. Summary Test Statistics
1. First Sample
____a. Sample Size
____b. Mean Efficiency
____c. Standard Deviation
____d. Upper Confidence Limit
____e. Lower Confidence Limit
2. Total Sample (If second sample required).
____a. Sample Size
____b. Mean Efficiency
____c. Standard Deviation
____d. Lower Confidence Limit

F. Test Results (for each unit tested)

Test Unit	Test Date(s)	Serial No.	SEER
1.			
2.			
3.			
4.			
5.			
6.			
7.			
8.			
9.			

(6) Clothes Dryers
REQUIRED CERTIFICATION REPORT FORM (Sheet 1 of)
(To be used for all Certification, Conditional Certification and Post Certification Reports)

_____
Model No. of Model Tested

_____
Manufacturer

_____
Date of Submittal

NOTE: File one set of forms for each basic model to which a sampling plan applies.

I. MODEL SPECIFIC INFORMATION

A. Basic Model Description

1. Product: Clothes Dryers

2. Product Class (Check One)
____a. Electric, Standard Size
____b. Electric, Compact
____c. Gas

3. Basic Model information
a. Basic Model "Descriptor" (Model Number of Model Tested)* _____
b. Rated Energy Factor (EF) _____
1) As determined Using DOE Test Procedures _____
c. Rated Drum Capacity (cu. ft.) _____
d. Power Rating of heater (electric only) _____
e. Control System _____
1) Time-Controlled, Manual _____
2) Temperature-Controlled, Automatic Termination _____
3) Moisture Sensor Controlled _____
4) Other _____
f. Pilot Light (yes/no) _____

g. Energy Related Options or other features which affect the measure of efficiency _____

*Use this designator as cross-reference to all following pages of submittal.

(6) Clothes Dryers
REQUIRED CERTIFICATION REPORT FORM (Sheet 2 of)

Model No of Model Tested

I MODEL SPECIFIC INFORMATION (Con t)
A Basic Model Description (Con't)

4 Model Numbers/Serial Numbers Grouped with this Basic Model

Model Numbers	Starting /Serial Nos	Brand Name	Carry-over or Replacement**	Replaced Model No **
1	/	1	1	1
2	/	2	2	2
3	/	3	3	3
4	/	4	4	4
5	/	5	5	5
6	/	6	6	6
7	/	7	7	7
8	/	8	8	8
9	/	9	9	9
10	/	10	10	10
11	/	11	11	11
12	/	12	12	12

4d Codes for Serial Numbers to allow determination of Date of Manufacture

_____

_____

_____

_____

**If this is a carry-over or replacement model so indicate, otherwise leave blank

(6) Clothes Dryers
REQUIRED CERTIFICATION REPORT FORM (Sheet 3 of)

Model No of Model Tested

I MODEL SPECIFIC INFORMATION (Con t)
B Production Information

1 Location of all manufacturing facilities producing this basic model
a _____ b _____

2 Production Schedule, by facility

		Facility a	Facility b
a Number of production runs planned for the next 12 months		_____	_____
b. Beginning and end dates for each production run	Run 1	to	to
	Run 2	to	to
	Run 3	to	to
	Run 4	to	to

c Estimated total annual production for current year
1) less than 200 units _____
2) 200 to 1000 _____
3) more than 1000 _____

3 Critical Component Suppliers (With component type or description)

Item	Supplier(s)	Type or Description
a Heating Element		
b Motor		
c Control System		
d Automatic Termination and Overdry Controls		
e Printed Circuit Boards		
f Other distinct energy-related components		

C Test Program Information
1 Location of Test facilities
a Owned by Company b Independent Test Laboratory (if used)

_____ _____

2 Percent of Production units to be tested for energy efficiency
a Using DOE test procedures _____
b Using other test procedures (specify procedures) _____

D Other Information (use separate sheet)

(6) Clothes Dryers
REQUIRED CERTIFICATION REPORT FORM (Sheet 4 of)

_____
Model No. of Model Tested

II. SUMMARY OF CERTIFICATION TEST DATA

A. Energy efficiency rating for the Model
1. Model Number of Model Tested _____
2. Rated Energy Factor (EF) _____
3. If this is a replacement model, give model number and rated EF of the prior model _____
Model Number/EF

B. Description of sample used to obtain ratings
1. Batch Size
2. Type of Units Tested (Check One)
____a. Production Units
____b. Other (Describe _____)

C. Location where test units were manufactured _____ Location where test units were tested _____

D. Location of underlying test data _____

E. Summary Test Statistics
1. First Sample
____a. Sample Size
____b. Mean Efficiency
____c. Standard Deviation
____d. Upper Confidence Limit
____e. Lower Confidence Limit
2. Total Sample (If second sample required).
____a. Sample Size
____b. Mean Efficiency
____c. Standard Deviation
____d. Lower Confidence Limit

F. Test Results (for each unit tested)

Test Unit	Test Date(s)	Serial No.	EF
1.			
2.			
3.			
4.			
5.			
6.			
7.			
8.			
9.			

(7) Room Air Conditioners
REQUIRED CERTIFICATION REPORT FORM (Sheet 1 of)
(To be used for all Certification, Conditional Certification and Post Certification Reports)

_____
Model No. of Model Tested

_____
Manufacturer

_____
Date of Submittal

NOTE: File one set of forms for each basic model to which a sampling plan applies.

I. MODEL SPECIFIC INFORMATION

A. Basic Model Description

1. Product: Room Air Conditioners

2. Product Class (Check One)
____a. With outdoor side louvers, 6000 BTU/hr and under
____b. With outdoor side louvers, over 6000 BTU/hr and under 20,000 BTU/hr
____c. With outdoor side louvers, over 20,000 BTU/hr
____d. Without outdoor side louvers, and Reverse cycle

3. Basic Model information
a. Basic Model "Descriptor" (Model Number of Model Tested)* _____
b. Rated Energy Efficiency Ratio (EER)
1) As determined Using DOE Test Procedures _____
2) As determined for FTC Labeling Program _____
c. Cooling Capacity (BTU/h) _____
d. Electrical Ratings
1) Amperage____ 2) Voltage ____ 3) Wattage _____
e. Compressor Capacity _____
f. Fan Speed(s) _____
g. Air Flow at max. fan speed
1) Dry Coil _____ 2) Wet Coil _____
h. Energy Related Options or other features which affect the measure of efficiency _____
i. Estimated Annual Energy Consumption (as determined for the FTC Labeling Program) _____
j. Estimated Annual Energy Cost (as determined for the FTC Labeling Program) _____

*Use this designator as cross-reference to all following pages of submittal.

(7) Room Air Conditioners
REQUIRED CERTIFICATION REPORT FORM (Sheet 2 of)

Model No. of Model Tested

I. MODEL SPECIFIC INFORMATION (Con't)
A. Basic Model Description (Con't)

4. Model Numbers/Serial Numbers Grouped with this Basic Model

Model Numbers	Starting /Serial Nos.	Brand Name	Carry-over or Replacement**	Replaced Model No.**
1.	/	1.	1.	1
2.	/	2.	2.	2
3.	/	3.	3.	3
4.	/	4.	4.	4.
5.	/	5.	5.	5.
6.	/	6.	6.	6.
7.	/	7.	7.	7.
8.	/	8.	8.	8.
9.	/	9.	9.	9.
10.	/	10.	10.	10.
11.	/	11.	11.	11.
12.	/	12.	12.	12.

4d. Codes for Serial Numbers to allow determination of Date of Manufacture

_____

_____

_____

_____

**If this is a carry-over or replacement model so indicate, otherwise leave blank.

(7) Room Air Conditioners
REQUIRED CERTIFICATION REPORT FORM (Sheet 3 of)

Model No. of Model Tested

I. MODEL SPECIFIC INFORMATION (Con't)
B. Production Information

1. Location of all manufacturing facilities producing this basic model
a. _____ b. _____

2. Production Schedule, by facility

		Facility a.	Facility b.
a. Number of production runs planned for the next 12 months			
b. Beginning and end dates for each production run	Run 1	to	to
	Run 2	to	to
	Run 3	to	to
	Run 4	to	to

c. Estimated total annual production for current year
1) less than 200 units
2) 200 to 1000
3) more than 1000

3. Critical Component Suppliers (With component type or description)

Item	Supplier(s)	Type or Description
a. Compressor/motor		
b. Condenser coil		
c. Evaporator coil		
d. Fan		
e. Fan motor		
f. Refrigerant		
g. Other distinct energy-related components		

C. Test Program Information

1. Location of Test facilities
a. Owned by Company b. Independent Test Laboratory (if used)

2. Percent of Production units to be tested for energy efficiency
a. Using DOE test procedures _____
b. Using other test procedures (specify procedures) _____

D. Other Information (use separate sheet)

(7) Room Air Conditioners
REQUIRED CERTIFICATION REPORT FORM (Sheet 4 of)

_____
Model No. of Model Tested

II. SUMMARY OF CERTIFICATION TEST DATA

A. Energy efficiency rating for the Model
1. Model Number of Model Tested _____
2. Rated Energy Efficiency Ratio (EER) _____
3. If this is a replacement model, give model number and rated EER of the prior model _____
Model Number/EER

B. Description of sample used to obtain ratings
1. Batch Size
2. Type of Units Tested (Check One)
____a. Production Units
____b. Other (Describe _____)

C. Location where test units were manufactured _____ Location where test units were tested _____

D. Location of underlying test data _____

E. Summary Test Statistics
1. First Sample
____a. Sample Size
____b. Mean Efficiency
____c. Standard Deviation
____d. Upper Confidence Limit
____e. Lower Confidence Limit
2. Total Sample (If second sample required)
____a. Sample Size
____b. Mean Efficiency
____c. Standard Deviation
____d. Lower Confidence Limit

F. Test Results (for each unit tested)

Test Unit	Test Date(s)	Serial No	EER
1.			
2.			
3.			
4.			
5.			
6.			
7.			
8.			
9			

(8) Freezers
REQUIRED CERTIFICATION REPORT FORM (Sheet 1 of)
(To be used for all Certification, Conditional Certification and Post Certification Reports)

_____
Model No. of Model Tested

_____
Manufacturer

_____
Date of Submittal

NOTE: File one set of forms for each basic model to which a sampling plan applies.

I. MODEL SPECIFIC INFORMATION

A. Basic Model Description

1. Product: Freezers

2. Product Class (Check One)
____a. Manual defrost - chest cabinet
____b. Manual defrost - upright cabinet
____c. Automatic defrost - upright cabinet

3. Basic Model information
a. Basic Model "Descriptor" (Model Number of Model Tested)* _____
b. Rated Energy Factor (EF)
1) As determined Using DOE Test Procedures _____
2) As determined for FTC Labeling Program _____
c. Rated Capacity (cu. ft.)
1) Net refrigerated volume _____
d. Electrical Rating-Voltage _____
e. Energy Related Options or other features which affect the measure of efficiency _____
f. Estimated Annual Energy Consumption (as determined for the FTC Labeling Program) _____
g. Estimated Annual Energy Cost (as determined for the FTC Labeling Program) _____

*Use this designator as cross-reference to all following pages of submittal.

(8) Freezers
REQUIRED CERTIFICATION REPORT FORM (Sheet 2 of)

Model No of Model Tested

I MODEL SPECIFIC INFORMATION (Con t)
A Basic Model Description (Con't)

4 Model Numbers/Serial Numbers Grouped with this Basic Model

Model Numbers	Starting /Serial Nos	Brand Name	Carry-over or Replacement**	Replaced Model No **
1	/	1	1	1
2	/	2	2	2
3	/	3	3	3
4	/	4	4	4
5	/	5	5	5
6	/	6	6	6
7	/	7	7	7
8	/	8	8	8
9	/	9	9	9
10	/	10	10	10
11	/	11	11	11
12	/	12	12	12

4d Codes for Serial Numbers to allow determination of Date of Manufacture

_____

_____

_____

_____

**If this is a carry-over or replacement model so indicate, otherwise leave blank

(8) Freezers
REQUIRED CERTIFICATION REPORT FORM (Sheet 3 of)

Model No of Model Tested

I MODEL SPECIFIC INFORMATION (Con t)
B Production Information

1 Location of all manufacturing facilities producing this basic model
a _____ b _____

2 Production Schedule, by facility

		Facility a	Facility b
a Number of production runs planned for the next 12 months		_____	_____
b Beginning and end dates for each production run	Run 1	to	to
	Run 2	to	to
	Run 3	to	to
	Run 4	to	to

c Estimated total annual production for current year
1) less than 200 units _____
2) 200 to 1000 _____
3) more than 1000 _____

3 Critical Component Suppliers (With component type or description)

Item	Supplier(s)	Type or Description
a Compressor/Motor		
b Condenser/Coil		
c Condenser fan motor		
d Evaporator		
e Heat exchanger (Interchanger)		
f Door seals		
g Insulating materials		
h Defrost control		
i Refrigerant		
j Anti-sweat heater		
k Other distinct energy-related components		

C Test Program Information

1 Location of Test facilities
a Owned by Company
b Independent Test Laboratory (if used)

2 Percent of Production units to be tested for energy efficiency
a Using DOE test procedures _____
b Using other test procedures (specify procedures) _____

D Other Information (use separate sheet)

(8) Freezers
REQUIRED CERTIFICATION REPORT FORM (Sheet 4 of)

_____
Model No. of Model Tested

II. SUMMARY OF CERTIFICATION TEST DATA

A. Energy efficiency rating for the Model
1. Model Number of Model Tested _____
2. Rated Energy Factor (EF) _____
3. If this is a replacement model, give model number and rated EF of the prior model _____
Model Number/EF

B. Description of sample used to obtain ratings
1. Batch Size
2. Type of Units Tested (Check One)
____a. Production Units
____b. Other (Describe _____)

C. Location where test units were manufactured _____ Location where test units were tested _____

D Location of underlying test data _____

E Summary Test Statistics
1. First Sample
____a Sample Size
____b. Mean Efficiency
____c. Standard Deviation
____d. Upper Confidence Limit
____e. Lower Confidence Limit
2. Total Sample (If second sample required).
____a Sample Size
____b Mean Efficiency
____c. Standard Deviation
____d Lower Confidence Limit

F Test Results (for each unit tested)

Test Unit	Test Date(s)	Serial No.	EF
1.			
2			
3			
4			
5			
6			
7			
8.			
9.			

APPENDIX C: REQUIRED INFORMATION AND FORMAT FOR THE PRE-CERTIFICATION REPORT

The required information and format for the pre-certification report--including the cover sheet and body of the report--are provided here-in.

PRE-CERTIFICATION COVER SHEET

(for Manufacturers)

PRODUCT: _____

Submit by Certified Mail to:
Department of Energy
Consumer Products Efficiency Branch
Forrestal Building
Mail Stop GN095
1000 Independence Avenue, S W
Washington, D C 20585
Attention: James Smith

NAME and ADDRESS of MANUFACTURER

_____
_____
_____

BASIC MODEL(S) COVERED IN THIS SUBMITTAL	Manufactured, Private Labeled or both (Specify and name private labeler, if applicable, providing address below)
1 _____	1 _____
2 _____	2 _____
3 _____	3 _____
4 _____	4 _____
5 _____	5 _____
6 _____	6 _____
7 _____	7 _____

(for additional models use another page)

NAME and ADDRESS of PRIVATE LABELER(S), (if applicable)

_____
_____
_____

NAMES, ADDRESSES and PHONE NUMBERS OF INDIVIDUAL(S) responsible for:

	a DOE LIAISON	b EFFICIENCY TESTING	c NON-TEST INFORMATION
Name:	_____	_____	_____
address:	_____	_____	_____
	_____	_____	_____
phone no:	_____	_____	_____

Signed _____ Date _____

PRE-CERTIFICATION COVER SHEET

(for Private Labelers)

PRODUCT: _____

Submit by Certified Mail to:
Department of Energy
Consumer Products Efficiency Branch
Forrestal Building
Mail Stop GN095
1000 Independence Avenue, S W
Washington, D C 20585
Attention: James Smith

NAME and ADDRESS of PRIVATE LABELER

_____
_____
_____

BASIC MODEL(S) COVERED IN THIS SUBMITTAL	MANUFACTURER (Specify and provide address below)
1 _____	1 _____
2 _____	2 _____
3 _____	3 _____
4 _____	4 _____
5 _____	5 _____
6 _____	6 _____
7 _____	7 _____

(for additional models use another page)

NAME and ADDRESS of MANUFACTURER(S)

_____
_____
_____

NAMES ADDRESSES and PHONE NUMBERS OF INDIVIDUAL(S) responsible for:

	a DOE LIAISON	b EFFICIENCY TESTING	c NON-TEST INFORMATION
Name:	_____	_____	_____
address:	_____	_____	_____
	_____	_____	_____
phone no:	_____	_____	_____

Signed _____ Date _____

PRE-CERTIFICATION REPORT

The following information should be completed for each model included in this submittal.

A. Basic Model (Name)	B. Model Numbers/Starting Serial Numbers	
1. _____ ( )	1.	/
	2.	/
	3.	/
	o	
	o	
2. _____ ( )	1.	/
	2.	/
	o	
	o	

C. Scheduled Date for Start of Certification Testing

Basic Model #1 _____

Basic Model #2 _____

APPENDIX D: MINIMUM INFORMATION TO BE RETAINED BY THE MANUFACTURER ON ENERGY EFFICIENCY TEST FACILITIES AND INSTRUMENTATION.

The required information and format is listed below, for each of the following products:

(1) Furnaces and Boilers.

(2) Water Heaters.

(3) Refrigerators and Refrigerator-freezers.

(4) Kitchen Ranges and Ovens

(5) Central Air Conditioners

(6) Clothes Dryers

(7) Room Air Conditioners

(8) Freezers

(1) Furnaces

Model No of Model Tested

A Test Conditions
1 Do room test conditions meet all requirements of DOE Test Procedure _____ Yes or No
If not, list differences _____

B Instruments*

1 Temperature Measurement Instruments
a Description and Model No _____
b Accuracy _____
c Date Last Calibrated _____

2 Pressure Measurement Instruments
a Description and Model No _____
b Accuracy _____
c Date Last Calibrated _____

3 Electrical Measurement Instruments
a Description and Model No _____
b Accuracy _____
c Date Last Calibrated _____

4 Gas or Oil Flow Measurement Instruments
a Description and Model No _____
b Accuracy _____
c Date Last Calibrated _____

5 Time Measurement Instruments
a Description and Model No _____
b Accuracy _____
c Date Last Calibrated _____

6 CO_2 Concentration Measurement Instruments
a Description and Model No _____
b Accuracy _____
c Date Last Calibrated _____

7 Heating Value Measurement Instruments (if measured)
a Description and Model No _____
b Accuracy _____
c Date Last Calibrated _____

8 Tracer Gas Measurement Instruments (if optional tracer gas method used)
a Description and Model No _____
b Accuracy _____
c Date Last Calibrated _____

*If Instrument Conditions change, note changes and list which test units were tested under each set of conditions

(2) Water Heaters

Model No of Model Tested

A Test Conditions
1 Test Room Size _____
2 Exhaust System Set-up _____
3 Source of Gas Supply
a Utility Company Supply Line _____
b Bottled Gas _____

B Instruments*

1 Temperature Measurement Instruments
a Description and Model No _____
b Accuracy _____
c Date Last Calibrated _____

2 Electrical Measurement Instruments
a Description and Model No _____
b Accuracy _____
c Date Last Calibrated _____

3 Gas Flow Measurement Instruments
a Description and Model No _____
b Accuracy _____
c Date Last Calibrated _____

4 Gas Heating Value Measurement Instruments
a Description and Model No _____
b Accuracy _____
c Date Last Calibrated _____

5 Pressure Measurement Instruments
a Description and Model No _____
b Accuracy _____
c Date Last Calibrated _____

6 Time Measurement Instruments
a Description and Model No _____
b Accuracy _____
c Date Last Calibrated _____

7 Weighing Scales
a Description and Model No _____
b Accuracy _____
c Date Last Calibrated _____

*If Instrument Conditions change, note changes and list which test units were tested under each set of conditions

(3) Refrigerators and Refrigerator-Freezers _____
Model No. of Model Tested

A. Test Conditions
1. Do room test conditions meet requirements of ANS B38(ASHRAE 13) _____
Yes or No

If not, list differences _____
2. Do conditions of test unit meet requirements of AHAM Standard HRF-2-ECFT _____
Yes or No

If not, list differences _____

B. Instruments*

1. Temperature Measurement Instruments (Thermometer or Thermocouple)
a. Description and Model No. _____
b. Accuracy _____
c. Date Last Calibrated _____

2. Ambient Temperature Measurement Instruments (Thermometer)
a. Description and Model No. _____
b. Accuracy _____
c. Date Last Calibrated _____

3. Electrical Measurement Instruments (Watthour meter or other)
a. Description and Model No. _____
b. Accuracy _____
c. Date Last Calibrated _____

4. Humidity Measurement (Psychrometric) Instruments
a. Description and Model No. _____
b. Accuracy _____
c. Date Last Calibrated _____

5. Time Measurement Instruments
a. Description and Model No. _____
b. Accuracy _____
c. Date Last Calibrated _____

*If Instrument Conditions change, note changes and list which test units were tested under each set of conditions.

(4) Kitchen Ranges and Ovens _____
Model No. of Model Tested

A. Test Conditions
1. Installation
a. Does unit and thermocouple installation meet requirements of DOE Test Procedures for Conventional Ranges, Cooking, Tops and Ovens, Microwave Ovens and Microwave/Conventional Ranges - _____
Yes or No

If not, list differences _____

B. Instruments*

1. Temperature Measurement Instruments (for ovens, surface and test blocks)
a. Description and Model No. _____
b. Accuracy _____
c. Date Last Calibrated _____

2. Ambient Temperature Measurement Instruments (for room)
a. Description and Model No. _____
b. Accuracy _____
c. Date Last Calibrated _____

3. Electrical Measurement Instruments (Watthour meter or other)
a. Description and Model No. _____
b. Accuracy _____
c. Date Last Calibrated _____

4. Gas Measurement Instruments (Positive Displacement and Flow meters)
a. Description and Model No. _____
b. Accuracy _____
c. Date Last Calibrated _____

5. Heat Measurement Instruments (Calorimeter)
a. Description and Model No. _____
b. Accuracy _____
c. Date Last Calibrated _____

6. Weight Measurement Instruments
a. Description and Model No. _____
b. Accuracy _____
c. Date Last Calibrated _____

7. Humidity Measurement (Psychrometric) Instruments
a. Description and Model No. _____
b. Accuracy _____
c. Date Last Calibrated _____

*If Instrument Conditions change, note changes and list which test units were tested under each set of conditions.

(5) Central Air Conditioners

Model No of Model Tested

A Test Conditions
1 Room Requirements
a Type
b Dimensions of each room
c Description of Reconditioning Equipment
2 Do conditions of room and test unit meet requirements of DOE Test Procedure _____ Yes or No
If not, list differences _____

B Instruments*

1 Temperature Measurement Instruments
a Description and Model No _____
b Accuracy _____
c Date Last Calibrated _____

2 Pressure Measurement Instruments
a Description and Model No _____
b Accuracy _____
c Date Last Calibrated _____

3 Electrical Measurement Instruments
a Description and Model No _____
b Accuracy _____
c Date Last Calibrated _____

4 Air Flow and Static Pressure Measurement Instruments
a Description and Model No _____
b Accuracy _____
c Date Last Calibrated _____

5 Liquid Flow Measurement Instruments
a Description and Model No _____
b Accuracy _____
c Date Last Calibrated _____

6 Speed Measurement Instruments
a Description and Model No _____
b Accuracy _____
c Date Last Calibrated _____

7 Time Measurement Instruments
a Description and Model No _____
b. Accuracy _____
c Date Last Calibrated _____

8 Weight Measurement Instruments
a Description and Model No _____
b Accuracy _____
c Date Last Calibrated _____

*If Instrument Conditions change, note chnages and list which test units were tested under each set of conditions

(6) Clothes Dryers

Model No of Model Tested

A Test Conditions
1 Do room and unit test conditions meet requirements of DOE Test Procedures _____ Yes or No
If not, list differences _____
2 Describe Exhaust System Setup _____
3 Describe Load Arrangement Composition _____
a Energy Test Cloth _____
b Energy Stuffer Cloth _____
4 Certification
a of Gas Heating Value _____
b. of Test Cloth _____
5 Describe Water Hardness Test _____

B Instruments*

1 Temperature Measurement Instruments (Air & Water)
a Description and Model No _____
b Accuracy _____
c Date Last Calibrated _____

2 Gas Measurement Instruments
a Description and Model No _____
b Accuracy _____
c Date Last Calibrated _____

3 Electrical Measurement Instruments (Watthour meter or other)
a Description and Model No _____
b Accuracy _____
c Date Last Calibrated _____

4 Heat Measurement Instruments
a Description and Model No _____
b Accuracy _____
c Date Last Calibrated _____

5 Pressure Measurement Instruments
a Description and Model No _____
b Accuracy _____
c Date Last Calibrated _____

6 Moisture Measurement Instruments
a Description and Model No _____
b Accuracy _____
c Date Last Calibrated _____

7 Weight Measurement Instruments
a Description and Model No _____
b Accuracy _____
c Date Last Calibrated _____

*If Instrument Conditions change, note changes and list which test units were tested under each set of conditions

(7) Room Air Conditioners

_____
Model No. of Model Tested

A. Test Conditions
1. Room Requirements
a. Type
b. Dimensions of each room
c. Description of Reconditioning Equipment
2. Do conditions of room and test unit meet requirements of DOE Test Procedure _____
Yes or No
If not, list differences _____

B. Instruments*
1. Temperature Measurement Instruments (Thermometer or Thermocouple)
a. Description and Model No. _____
b. Accuracy _____
c. Date Last Calibrated _____
2. Pressure Measurement Instruments
a. Description and Model No. _____
b. Accuracy _____
c. Date Last Calibrated _____
3. Electrical Measurement Instruments (Watthour meter or other)
a Description and Model No. _____
b. Accuracy _____
c. Date Last Calibrated _____
4. Water Flow Measurement Instruments
a Description and Model No. _____
b. Accuracy _____
c. Date Last Calibrated _____
5 Time Measurement Instruments
a Description and Model No _____
b Accuracy _____
c Date Last Calibrated _____
6 Weight Measurement Instruments
a Description and Model No. _____
b Accuracy _____
c Date Last Calibrated _____

*If Instrument Conditions change, note changes and list which test units were tested under each set of conditions.

(8) Freezers

_____
Model No. of Model Tested

A. Test Conditions
1. Do room test conditions meet requirements of ANS B38(ASHRAE 13) _____
Yes or No
If not, list differences _____
2. Do conditions of test unit meet requirements of AHAM Standard HRF-2-ECFT _____
Yes or No
If not, list differences _____

B. Instruments*
1. Temperature Measurement Instruments (Thermometer or Thermocouple)
a. Description and Model No. _____
b. Accuracy _____
c. Date Last Calibrated _____
2. Ambient Temperature Measurement Instruments (Thermometer)
a. Description and Model No. _____
b. Accuracy _____
c. Date Last Calibrated _____
3. Electrical Measurement Instruments (Watthour meter or other)
a. Description and Model No. _____
b. Accuracy _____
c. Date Last Calibrated _____
4. Humidity Measurement (Psychrometric) Instruments
a Description and Model No. _____
b. Accuracy _____
c. Date Last Calibrated _____
5 Time Measurement Instruments
a. Description and Model No. _____
b. Accuracy _____
c. Date Last Calibrated _____

*If Instrument Conditions change, note changes and list which test units were tested under each set of conditions

APPENDIX E: LIST OF MINIMUM SUPPORTING CERTIFICATION TEST DATA TO BE RETAINED BY THE MANUFACTURER

The required information and format is listed below, for each of the following products:

(1) Furnaces and Boilers

(2) Water Heaters

(3) Refrigerators and Refrigerator-freezers

(4) Kitchen Ranges and Ovens

(5) Central Air Conditioners

(6) Clothes Dryers

(7) Room Air conditioners

(8) Freezers

(1) Furnaces

Model No of Model Tested

A ENERGY CONSUMPTION MEASURES

1 Annual Fuel Utilization Efficiency (AFUE)

$$AFUE = \frac{\text{Heat Output Obtained from the Fossil Fuel Input}}{\text{Energy Content of the Fossil Fuel Input}}$$

B DATA TO BE RECORDED

1 General

Date of Test _____

Manufacturer _____

Test Unit Model No /Serial No _____

Test Number _____

2 Test Specific Data

It is recommended that the work sheet (Figure 10 in the FR Test Procedures for Furnaces) be retained for every test run The work sheet should contain the following data:

SYS# - System number from table 4 of the FR test procedure _____

T_{Fuel} - Type of fuel (oil = 1, gas = 2) _____

HHV - measured higher heating value of test gas, in Btu/lb _____

Q_{IN} - fuel energy input rate at steady-state operation (including any pilot light input), in Btu/hr _____

Q_P - fuel energy input rate to pilot light, in Btu/hr _____

PE - electrical power to power burner, in kW _____

BE - electrical power to circulating air blower or water pump, in kW _____

$X_{CO_2,F}$ - concentration by volume of CO_2 present in dry flue gas, in % _____

$X_{CO_2,S}$ - concentration by volume of CO_2 present in dry stack gas, in % _____

$T_{S,SS,X}$ - measured steady-state stack gas temperature, in °F _____

$T_{F,SS}$ - flue gas temperature at steady-state, in °F _____

$T_{F,ON}$ - on-cycle flue gas temperature while the system is in cyclic operation, in °F _____

$T_{F,OFF}$ - off-period flue gas temperature while the system is in cyclic operation, in °F _____

t_1, t_2, t_3, t_4 - different times at which flue and/or stack gas temperature are measured, in min _____

T_{RA} - Laboratory room temperature, in °F _____

L_J - jacket loss, in % _____

(1) Furnaces (Continued)

Model No. of Model Tested

S/F - ratio of stack gas mass flow rate to flue gas mass flow rate at steady-state operation and an average outdoor temperature equal to 42°F (5.6°C) _____

D_F - off-cycle draft factor for flue gas flow _____

D_S - off-cycle draft factor for stack gas flow _____

y - ratio of blower on time to burner on time _____

PF - ratio of Q_P to Q_N _____

HHV_A - average higher heating value of typical fuel, in Btu/lb _____

A/F - mass ratio of stoichiometric air to fuel _____

$L_{L,A}$ - average latent heat loss of the test fuel _____

C_j - jacket loss factor _____

$R_{T,F}$ - ratio of combustion air to stoichiometric air _____

$R_{T,S}$ - ratio of combustion air and draft relief air to stoichiometric air _____

$L_{S,SS,A}$ - sensible heat loss at steady-state operation, in % _____

η_{SS} - steady-state efficiency _____

$T_{S,SS}$ - calculated stack gas temperature at steady-state, under typical field condition, in °F _____

τ_{ON} - heat-up time constant defined in section 4.2.8, in min _____

τ_{OFF} - cool-down time constant defined in section 4.2.10, in min _____

$\theta_{F,O,X}$ - temperature difference defined in section 4.2.9 _____

$\Psi_{F,O,X}$ - Temperature difference defined in section 4.2.11 _____

$\Psi_{F,\infty,X}$ - temperature difference defined by $(T_{F,OFF}(\infty) - T_{RA})$ _____

$\Psi_{S,\infty,X}$ - temperature difference defined in section 4.2.12 _____

$\Psi_{S,O,X}$ - temperature difference defined in section 4.2.13 _____

C_S, C_S' - on-period and off-period correction factors for outdoor units, units intended for installation in unheated spaces or units equipped with direct vent systems _____

$K_{I,OFF}$ - multiplication factor for infiltration loss during off-period _____

(1) Furnaces (Continued)

Model No. of Model Tested

$K_{I,ON}$ - multiplication factor for infiltration loss during on-period _____

$K_{S,OFF}$ - multiplication factor for sensible heat loss during off-period _____

$K_{S,ON}$ - multiplication factor for sensible heat loss during on-period _____

T_{OA} - outdoor temperature °F _____

t_{on} - burner on time, min. _____

t_{off} - burner off time, min. _____

t_{on}/τ_{on} - Ratio of the average burner on-time per cycle to the on-cycle time constant. As defined in 4.2.20 _____

t_{off}/τ_{off} - Ratio of the average burner off-time per cycle to the off-cycle time-constant as defined in 4.2.21 _____

$\theta_{F,O}$ - temperature difference defined in section 4.2.22 _____

$\Psi_{F,O}$ - temperature difference defined in section 4.2.23 _____

$\Psi_{F,\infty}$ - temperature difference defined in section 4.2.24 _____

$\Psi_{S,O}$ - temperature difference defined in section 4.2.25 _____

F3, F4, F5, F6, F7, F8 } integration factors as defined in section 4.2.26, 4.2.27 _____

$L_{S,OFF}$ - off-cycle sensible heat loss, in % _____

$L_{S,ON}$ - on-cycle sensible heat loss, in % _____

$L_{I,OFF}$ - off-cycle infiltration loss, in % _____

$L_{I,ON}$ - on-cycle infiltration loss, in % _____

η_{PL} - part-load fuel utilization efficiency _____

$EFFY_A$ - Annual Fuel Utilization Efficiency (AFUE) _____

3. Additional data

If the optional tracer gas technique is used, record:

$T_{F,OFF}^{*}$ - Flue gas temperature during the off period _____

V_t - Flow rate of tracer gas through the furnace _____

C_t - Concentration by volume of tracer gas _____

T_t - temperature of tracer gas _____

P_B - Barometric pressure _____

D_P - the ratio of on and off flue gas mass flow rate _____

If the furnace employs the condensing mode, record:

$T_{F,ON}$ - Calculated average flue temperature during the on period _____

C_L - Latent heat loss coefficient _____

L_c - Condensate heat loss _____

(2) Water Heaters

Model No of Model Tested

A ENERGY CONSUMPTION MEASURES

1 Energy Factor (EF) = $\frac{\text{Daily Water Heating Energy Consumption}}{\text{Average Daily Energy Consumption x3,412}}$

2 Estimating Annual Operating Cost

B DATA TO BE RECORDED

1 General
Date of Test
Manufacturer
Test Unit Model No /Serial No
Test Number
Type of Unit (Gas, Oil, or Electric)
Tank Storage Capacity
Voltage, Electrical Supply
Ambient Temperature: max_____ min_____ ave
Water Supply Temperature
Water Supply Pressure
Gas Supply Pressure[1]
Gas Regulator Outlet Pressure
Test Gas Higher Heating Value
Power Input to Main Burner[2]
Power Input to any auxiliary electrical system during main burner operation[2]
Power Input to any auxiliary electrical system when the main burner is not in operation[2]
Outlet Water Connection Heat Trap Credit Claimed?
Inlet Water Connection Heat Trap Credit Claimed?

2 Recovery Efficiency Test
Initial Mean Tank Temperature
Maximum Mean Tank Temperature after Cutout
Total Fuel Flow[2]
Total Electrical Energy Consumption

3 Standby Loss Test
Initial Mean Tank Temperature
Total Fuel Flow[1]
Total Electrical Energy Consumption
Final Mean Tank Temperature
Time Duration of Test
Average Mean Tank Temperature
Average Ambient Air Temperature

(2) Water Heaters (Continued)

Model No of Model Tested

4 First Hour Rating Test[3]
Initial Mean Tank Temperature
Initial Outlet Water Temperature
Elapsed Time of Test prior to a thermostat acting to operate a heating element or the main burner
Weight of Water Withdrawn
Volume of Water Withdrawn
Mean of the Outlet Water Temperature Readings Recorded

[1]gas water heaters only
[2]gas and oil water heaters only
[3]Not applicable if first hour rating was determined by calculation

(3) Refrigerator and Refrigerator-Freezers _____
Model No. of Model Tested

A. ENERGY FACTOR (EF) FORMULA

$$EF = \frac{\text{Adjusted Total Volume } (ft^3)}{\text{Average per cycle energy consumption (kw.hr./cycle)}}$$

Where energy consumption is calculated for a standard cycle. If the unit has an anti-sweat switch which is not set at the highest energy consuming position at the factory then the denominator becomes:

½(Average per cycle energy consumption with switch at highest energy consuming position + Average per cycle energy consumption with switch in position set at factory)

B. DATA TO BE RECORDED

Date of test _____
Manufacturer _____
Test Unit Model No./Serial No. _____
Test Number _____
Test Run _____
Type of Unit _____
Type of Defrost System _____
Total Refrigerated Volume _____
Net Fresh Food (General) Refrigerated Volume (cu.ft.)[4] _____
Net Freezer Refrigerated Volume (cu.ft.)[4] _____
Adjusted Total Refrigerated Volume _____
Number of Temperature Controls _____
Anti-Sweat Heater Switch Setting _____
Power Input (kwh/cycle) _____
Voltage Applied to Unit _____
Frequency _____
Run-in Period (hours) _____
Relative Humidity _____
Ambient Temperature: Max._____, min._____, avg. _____
Average Fresh Food Compartment Temperature (total test)[1] _____
Average Freezer Compartment Temperature (total test)[1] _____
Temp. Control(s) at warmest position _____
Temp. Control(s) at coldest position _____
Temp. Control at mid position[2] _____
Primary Control Warmest, Secondary Coldest[3] _____
Primary Control Coldest, Secondary Warmest[3] _____
Time of Test Period (total test) _____
Time of Testing at each Temp. Control Position _____
Number of cycles of compressor during total test period _____
Number of cycles of compressor at each Temp Control position _____

(3) Refrigerator and Refrigerator-Freezers _____
Model No. of Model Tested

Energy Consumption (total test) _____
Temp. Control(s) at Warmest Position _____
Temp. Control(s) at Coldest Position _____
Temp. Control at Mid Position _____
Primary Control Warmest, Secondary Coldest[3] _____
Primary Control Coldest, Secondary Warmest[3] _____

1-For all average compartment temperatures keep information on all thermocouple locations and readings
2-Single Control Only
3-Multiple Control Only
4-Keep information on all sectional areas and volumes included in measurement

(4) Kitchen Ranges and Ovens

Model No of Model Tested

A ENERGY CONSUMPTION MEASURES

1 Energy Factor (EF) = $\frac{\text{Annual Useful Cooking Energy Output}}{\text{Total Annual Energy Input}}$

2 Estimated Annual Operating Cost

3 Cooking Efficiency

B DATA TO BE RECORDED

1 General

Date of Test _____

Manufacturer _____

Test Unit Model No/Serial No _____

Test Number _____

Energy Supply, (electric, gas, or propane) _____

Ambient Room Air Temperature _____

Test Room Temperature at Start of Test _____

Test Room Temperature at End of Test _____

Test Beaker Water Load Temperature, if required _____

Test Block Weight (for each block) _____

Initial Temperature of the Test Block under test _____

Voltage Input _____

Frequency _____

Current _____

Power Input _____

Heating Value for Natural Gas Supply (describe how value determined)[1] _____

Heating Value for Propane Gas Supply (describe how value determined)[1] _____

Gas Pressure at Inlet[1] _____

Regulator Outlet Pressure[1] _____

2 Conventional Ovens Test Energy Consumption

Energy Consumed during the time it took the temperature of the test block to rise 234°F.[2] _____

Block Temperature at the end of last 'ON period before block reaches T_o. _____

Energy Consumed at the end of last 'ON' period before block reaches T_o[2] _____

Block Temperature at the beginning of the next 'ON' period _____

Energy Consumed at the beginning of the next 'ON' period[2] _____

Block Temperature at the end of the next 'ON period _____

Energy Consumed at the end of the next 'ON' period[2] _____

Block Temperature at the beginning of the next 'ON' period _____

(4) Kitchen Ranges and Ovens (Continued)

Model No of Model Tested

Energy Consumed at the beginning of the next 'ON period[2] _____

Energy Consumed by an ignition device or other electrical components required for operation of the oven[1] _____

Energy Consumed during self cleaning test, if required[2] _____

Energy Consumed by an ignition device or other electrical components required for operation of the oven during self cleaning test, if required[1] _____

Gas consumption, or gas flow rate, of all continuously burning pilot lights during test [1] _____

Elapsed time that pilot lights are under test[1] _____

Clock Power requirements, if any _____

3 Conventional Surface Unit Test Energy Consumption

Energy Consumed during test[2] _____

Final Test Block Temperature _____

Total Test Time _____

Electrical Energy Consumed by an ignition device for gas burners, if required[1] _____

Gas consumption, or gas flow rate, of all cooking top continuously burning pilot lights during test[1] _____

Elapsed Time that pilot lights are under test[1] _____

4 Microwave Oven Test Energy Consumption

Initial Temperature of the water test load for each test _____

Final temperature of the water test load for each test _____

Elapsed Time until temperature rise of water load is 45±9°F _____

Electrical Input Energy consumed during elapsed time _____

NOTES

[1]Measurement for Gas Units only

[2]Energy Consumed is measured in Watt hours for electic ovens, and cubic feet of gas for gas ovens

(5) Central Air Conditioners

Model No. of Model Tested

A. SEASONAL ENERGY EFFICIENCY RATIO (SEER)

1. For units with two speed compressors or two compressors, or cylinder unloading:

$$SEER = \frac{\sum_{j=1}^{s} \frac{Q(Tj)}{N}}{\sum_{j=1}^{s} \frac{E(Tj)}{N}}$$

Where Q(Tj) = Total Cooling Capacity at Temperature j
E(Tj) = Total Energy Usage (electrical power input) at Temperature j
N = Total Number of hours at all test temperatures

2. For units with single speed compressors this reduces to:

$$SEER = \frac{Qss(82F)}{Ess(82F)} \times PLF = EER_B \times PLF$$

where EER_B = Energy Efficiency Ratio of Test B
PLF = Part-Load Performance Factor

B. Summary of Unit Configurations and Tests Run

1. Type of unit configuration

_____a. Single Speed Compressor/Single Speed Condenser Fan
_____b. Single Speed Compressor/Multiple Speed Condenser Fan
_____c. Two Speed Compressor/Two Compressors/or Cylinder Unloading
_____d. Two Speed Compressor/Two Compressors/or Cylinder unloading Capable of varying the Sensible to Total (S/T) Capacity Ratio.

2. Test Methods Used

a. For Single Speed Compressors, attach one set of data from Test A, Test B, Test C, and Test D. For Two Speed Compressors/Two Compressors attach one set of data from Test A, Test B, Test C, and Test D for each Compressor Capacity or Speed.

b. Place an "X" under the appropriate Test to indicate the Method Chosen to create the cooling capacity data.

(5) Central Air Conditioners (Continued)

Model No. of Model Tested

Method	TEST A	TEST B	TEST C	TEST D
1) Indoor Side (Check one)				
a. Air Enthalpy	____	____	____	____
b. Compressor Calibration	____	____	____	____
2) Outdoor Side (Check one)				
a. Air Enthalpy	____	____	____	____
b. Compressor Calibration	____	____	____	____
c. Volatile Refrigerant Flow	____	____	____	____

C. DATA TO BE RECORDED

1. General
Date of Test _____
Manufacturer _____
Test Unit Model No/Serial No. _____
Test Number _____
Test Run (Test A,B,C, or D) _____
Rated Compressor Cooling Capacity _____
Compressor Speed _____
Equipment Operating Time Before Testing Starts _____
Equipment Operating Time at Steady State _____
Data Measurement Recording Times _____
Cycling Times (where applicable) _____
Barometric Pressure _____
Electrical Input to Unit _____
Test Voltage, volts _____
Line Voltage Frequency, hz _____
Total Line Current, amps _____
Total Power Input, watts _____

2) Air Enthalpy Test
Apparatus Arrangement (Tunnel, Loop, Calorimeter, Room, Other) _____
Dry Bulb Temperature of Air Entering Equipment _____
Wet Bulb Temperature of Air Entering Equipment _____
Dry Bulb Temperature of Air Leaving Equipment _____
Wet Bulb Temperature of Air Leaving Equipment _____
Throat Diameter of Nozzle(s) _____
Temperature at Nozzle Throat _____
Pressure at Nozzle Throat _____
Velocity Pressure at Nozzle Throat or Static Pressure Difference Across Nozzles _____
External Resistance to Air Flow _____
Fan Speed(s), if adjustable _____
Refrigerant Liquid Temperature, Indoor Side _____
Refrigerant Liquid Temperature, Outdoor Side _____
Refrigerant Vapor Temperature, Indoor Side _____
Refrigerant Vapor Temperature, Outdoor Side _____
Diameter of Refrigerant Tube _____
Length of Refrigerant Line _____
Insulation Thickness on Interconnecting Tubing _____

(5) Central Air Conditioners (Continued)

Model No of Model Tested

3) Compressor Calibration Test

Condensing Pressure or Temperature	
Evaporator Pressure or Temperature	
Temperature of Refrigerant Vapor Entering Compressor	
Temperature of Refrigerant Vapor Leaving Compressor	
Temperature of Low Side Refrigerant Vapor Entering Switchover Valve	
Temperature of High Side Refrigerant Vapor Leaving Switchover Valve	
Refrigerant or Surface Temperature Used to Determine Leakage Coefficient	
Refrigerant Liquid Temperature, Indoor Side	
Refrigerant Vapor Temperature, Indoor Side	
Refrigerant Vapor Pressure, Indoor Side	
Refrigerant Vapor Temperature, Outdoor Side	
Refrigerant Liquid Temperature, Outdoor Side	
Refrigerant Temperature Entering Condenser	
Refrigerant Temperature Leaving Condenser	
Refrigerant Pressure Entering Condenser	
Refrigerant Pressure Leaving Condenser	
Water Temperatures Entering Condenser	
Water Temperatures Leaving Condenser	
Ambient Temperatures Surrounding Condenser	
Average Temperatures of Condenser Jacket Surface	
Quantity of Condenser Cooling Water	

4 Volatile Refrigerant Flow Test

Condensing Pressure or Temperature	
Evaporator Pressure or Temperature	
Refrigerant-oil Flow Rate	
Volume of Refrigerant in Refrigerant Oil Mixture	
Refrigerant Liquid Temperature, Indoor Side	
Refrigerant Vapor Temperature, Indoor Side	
Refrigerant Vapor Pressure	
Refrigerant Liquid Temperature, Outdoor Side	
Refrigerant Vapor Temperature, Outdoor Side	

(6) Clothes Dryers

Model No of Model Tested

A ENERGY FACTOR (EF) FORMULA

$$EF = \frac{\text{Bone Dry Test Load Weight (lb)}}{\text{Total Energy Consumption/Cycle (kwh)}}$$

B DATA TO BE RECORDED

Date of Test	
Manufacturer	
Test Unit Model No /Serial No	
Test Number	
Test Run	
Type of Unit	
Drum Capacity	
Power Input to Unit (kw)	
Line Current	
Voltage Applied to Unit	
Frequency	
Relative Humidity of Test Room	
Ambient Temperature of Test Room	
Gas Temperature	
Dryer Temperature Setting	
Dryer Timer Setting	
Bone Dry Test Load Weight	
Weight of Wet Test Load Before Test	
Moisture Content of Wet Test Load Before Test (%)	
Weight of Dry Test Load After Test	
Moisture Content of Dry Test Load after Test (%)	
Drying Time	
Total Electrical Energy Consumed During Test (kwh)	
Gas Consumed per Test Cycle (cu.ft)[1]	
Gas Consumed by Pilot Light/hr (cu ft)[1]	
Gas Pressure at Inlet[1]	
Corrected Gas Heating Value[1]	
Total Energy Consumption per Cycle (kwh)	

1-For Gas Dryers Only

(7) Room Air Conditioners

_____
Model No. of model tested

A. ENERGY EFFICIENCY RATIO (EER) FORMULA

$$\text{EER (BTU/watt/hr)} = \frac{\text{Cooling Capacity (BTU/hr)}}{\text{Electric Power Input (watts)}}$$

Where cooling capacity is calculated as the net total room cooling effect on the room side of the calorimeter and is simultaneously calculated as the net total room cooling effect on the outdoor side.

B. DATA TO BE RECORDED

Date of Test		_____
Manufacturer		_____
Test Unit Model No/Serial No.		_____
Test Number		_____
Test Run	_____	_____
EER	_____	_____
Cooling Capacity, Btu/hr	_____	_____
Line Current, Amps	_____	_____
Power Input, Watts	_____	_____
Barometric Pressure, in Hg.	_____	_____
Fan Speed (if variable), rpm	_____	_____
Electrical Input to Sample		
Test Voltage, volts	_____	_____
Line Voltage Frequency, hz	_____	_____
Total Line Current, amps	_____	_____
Total Power Input, watts	_____	_____
Air Temperature, °F		
"Indoor" Room, DB	_____	_____
WB	_____	_____
"Outdoor" Room, DB	_____	_____
WB	_____	_____
Refrigerant Circuit Temp, °F		
Cooling Water Entering	_____	_____
Cooling Water Leaving	_____	_____
Condensed Water Leaving	_____	_____
Humidifier Water Entering	_____	_____
Other (Specify)	_____	_____
Weight or Water Condensed by Sample, lb/hr	_____	_____
Cooling Water Flow Rate, lb/hr	_____	_____
Chassis Leakage Air Flow, cfm	_____	_____
Static Air Pressure Difference, inches H_2O	_____	_____
Cooling-Capacity		
"Indoor" Side Rating, Btu/hr	_____	_____
"Outdoor" Side Rating, Btu/hr	_____	_____
"Heat Balance", per cent	_____	_____

No Comments_____ See Attached Sheet_____ Refer also to Test No._____

Administrator: _____ Reviewed By: _____

BILLING CODE 6450-01-C

(8) Freezers

_____
Model No. of Model Tested

A. ENERGY FACTOR (EF) FORMULA

$$\text{EF} = \frac{\text{Adjusted Total Volume (ft}^3\text{)}}{\text{Average per cycle energy consumption (kw.hr./cycle)}}$$

Where energy consumption is calculated for a standard cycle. If the unit has an anti-sweat switch which is not set at the highest energy consuming position at the factory then the denominator becomes:

½(Average per cycle energy consumption with switch at highest energy consuming position + Average per cycle energy consumption with switch in position set at factory)

B. DATA TO BE RECORDED

Date of Test	_____
Manufacturer	_____
Test Unit Model No./Serial No.	_____
Test Number	_____
Test Run	_____
Type of Unit	_____
Type of Defrost System	_____
Total Refrigerated Volume	_____
Net Freezer Refrigerated Volume (cu.ft.)[2]	_____
Adjusted Total Refrigerated Volume	_____
Anti-Sweat Heater Switch Setting	_____
Power Input (kwh/cycle)	_____
Voltage applied to Unit	_____
Frequency	_____
Run-in Period (hours)	_____
Relative Humidity	_____
Ambient Temperature: Max. _____, min. _____ Avg.	_____
Average Freezer Compartment Temperature (total test)[1]	
Temp. Control at Warmest Position	_____
Temp. Control at Coldest Position	_____
Temp. Control at Mid Position	_____
Time of test Period (total test)	_____
Time of Testing at each Temp. Control Position	_____
Number of Cycles of Compressor During Total Test Period	_____
Number of Cycles of Compressor at each Temp. Control Position	_____
Energy Consumption (total test)	
Temp. Control at Warmest Position	_____
Temp. Control at Coldest Position	_____
Temp. Control at Mid Position	_____

1-For all average compartment temperatures keep information on all thermocouple locations and readings

2-Keep information on all sectional areas and volumes included in measurement

10 CFR Part 430

Energy Conservation Program for Consumer Products

AGENCY: Department of Energy.

ACTION: Notice of availability of environmental assessment and finding of no significant impact.

SUMMARY: The Department of Energy (DOE) announces the availability of its environmental assessment (EA) of its Energy Conservation Program for Consumer Products (DOE/EA-0113). DOE has determined, based on the EA, that this Program does not constitute a major Federal action significantly affecting the quality of the human environment, within the meaning of section 102(2)(C) of the National Environmental Policy Act of 1969 (NEPA), 42 U.S.C. 4321 *et seq.* Therefore, a finding of no significant impact, pursuant to 40 CFR 1501.4(e), is hereby issued to notify the public that an environmental impact statement is not required for this action.

ADDRESSES: For copies of the EA:

Department of Energy, Office of Hearings and Dockets, Forrestal Building, Room 1F-085, Mail Station 6B-025, 1000 Independence Avenue, S.W., Washington, D.C. 20585, Phone: 202-252-9319.

Department of Energy, Freedom of Information Reading Room, Forrestal Building, Room 5B-180, 1000 Independence Avenue, S.W., Washington, D.C. 20585, Phone: 202-252-6020.

Mr. James A. Smith, Department of Energy, Office of Conservation and Solar Energy, Forrestal Building, Room GH-065, Mail Station GH-068, 1000 Independence Avenue, S.W., Washington, D.C. 20585, Phone: 202-252-9127.

SUPPLEMENTARY INFORMATION:

I. Background

The Energy Policy and Conservation Act (EPCA) (Pub. L. 94-163), as amended by the National Energy Conservation Policy Act (NECPA) (Pub. L. 95-619), requires that the Department of Energy (DOE) prescribe energy efficiency standards for thirteen types of consumer products. These consumer products are sometimes referred to as "covered products." Standards for nine of these product types are required to be published in the Federal Register no later than December 24, 1980. The nine product types given priority by EPCA as amended, by NEPCA, and for which a rule is thereby proposed today, are refrigerators and refrigerator-freezers, freezers, clothes dryers, water heaters, room air conditioners, home heating equipment, not including furnaces, kitchen ranges and ovens, central air conditioners (cooling only), and furnaces. Standards for dishwashers, television sets, clothes washers, and humidifiers and dehumidifiers are required to be published in the Federal Register no later than November 9, 1981. Standards for central air conditioners (heat pumps) are required to be published in the Federal Register no later than January 23, 1982.

DOE'S first in prescribing energy efficiency standards for the thirteen product types was to publish three advance notices of proposed rulemaking in the Federal Register. The first, covering nine product types, was published on January 2, 1979 (44 FR 49). The second, covering dishwashers, television sets, clothes washers, and humidifiers and dehumidifiers, was published on December 13, 1979 (44 FR 72276). The third, covering heat pumps, was published on January 23, 1980 (45 FR 5602).

The notice of proposed rulemaking for energy efficiency standards for nine types of consumer products presents a discussion of DOE's basis for the proposed standards and the process for implementing the regulation. Ensuing sections deal with the legislative background, the standards implementation process, the phase-in period for standards, a discussion of the comments received as a result of the advance notice, a discussion of the product types and classes to which the proposed standards will apply, the certification and enforcement procedures proposed, a summary of the basis for arriving at maximum technologically feasible efficiency levels for each class of product, a summary of the basis for arriving at the minimum energy efficiency standards (intermediate and final) for each class of product, a discussion of state pre-emption petitions, small business exemptions, and a request for comments on various standards-related issues. In support of this proposed rule, the Department had developed six Technical Support Documents. These documents provide detailed information on important aspects of the proposed rule.

In accordance with its obligations under the National Environmental Policy Act (NEPA) (42 U.S.C. 4321, *et seq.*) and the Council of Environmental Quality regulations implementing the procedural provisions of NEPA (40 CFR 1500-1508), DOE stated in the advance notice of January 2, 1979 that it would prepare an Environmental Assessment on the impact of setting energy efficiency standards for the nine types of consumer products covered by the notice. Subsequent to publication of this advance notice, advance notices were published indicating that DOE is considering energy efficiency standards for dishwashers, television sets, clothes washers, humidifiers and dehumidifiers, and heat pumps. In order to produce a full environmental review of generically similar actions, thereby averting program segmentation, the Environmental Assessment being made available at this time addresses the potential environmental impacts of all thirteen types of consumer products.

The analyses in the Environmental Assessment indicated that air pollution and commitments of land and energy resources decreased as a result of decresing future energy demand. Indoor air quality was found to be at worst unaffected by implementation of standards and at best somewhat improved; the exact effect could not be measured because the design options that will be selected by manufacturers for improving the efficiency of gas-burning appliances could not be ascertained. The program was found to have no significant effect on water quality, noise levels or solid waste levels.

A maximum ("worst case") increase of about 4 percent (29 million pounds) in the production/consumption of chlorofluorocarbons in the United States is projected to occur by the year 1990 as a result of implementing the proposed standards, when compared to 1977 consumption levels. This increase is not considered to be significant for the following reasons:

- The "worst case" projection uses 1977 chlorofluorocarbon consumption in the appliances covered by the proposed standards as a baseline reference and assumes that, absent the proposed standards, there would not be any increase in the use of chlorofluorocarbons in those appliances. However, given the present trends in improving the energy efficiency of a number of these products, some increase in chlorofluorocarbon usage is likely to occur even without implementation of the proposed standards.
- The 4 percent projected increase in United States consumption represents only about 1 percent of world consumption of chlorofluorocarbons.
- The projected increase is small when compared to the approximately 470 million pound decrease in chlorofluorocarbon consumption that has occurred in the United States since 1973 with the phasing out (and, beginning in 1978, the total ban) of the use of chlorofluorocarbons in aerosol sprays. As a result of this decrease, total United States consumption of chlorofluorocarbons has dropped by over

150 million pounds per year since the peak year of 1973.

- The Environmental Protection Agency is currently developing strategies for the control of the release of chlorofluorocarbons into the atmosphere, and has been informed of the projected increase inconsumption due to the implementation of this proposed program. The Agency has informally stated that they believe that this potential increase can be mitigated through implementation of one or more of the control strategies presently under development. These strategies are discussed in the program environmental assessment.

Projected increases in the use of copper, steel, iron, aluminum, plastic and fiberglass were not considered to be significant, when compared to total U.S. production. In addition, it was found that money saved from lower operating costs would be likely to be spend on goods and services in the general economy and might therefore stimulate additional pollution which would not have occurred without the program. This amount was estimated to be minimal and to have no significant impact on future environmental quality.

The Environmental Assessment also summarized the socioeconomic impacts of the program in a number of areas. Change in the life cycle costs for consumers; The differential impact of the program on various income groups; Change in the profitability of manufacturers of consumer products; The value of the program to the Nation as a whole and to various regions of the country; Effects of the program on the health and safety of workers in the consumer product manufacturing industry; and Secondary effects of the program on the national economy, including effects on employment, inflation, gross national product, and balance of trade.

Alternatives to the energy efficiency standards as proposed were assessed from the perspective of environmental impact. None of the alternatives analyzed was found to vary significantly from the program with respect to its impact on the environment.

Based on the results of the Environmental Assessment, DOE has determined that the Energy Conservation Program for Consumer Products does not represent a major Federal action significantly affecting the quality of the human environment within the meaning of Section 120(2)(C) of NEPA.

II. Public Access to Information

Single copies of the EA may be obtained from the Office of Hearings and Dockets at the address listed above. Copies of the EA are also available for public review in the DOE Freedom of Information Reading Room at the address listed above, between the hours of 8 a.m., and 4 p.m., Monday through Friday, except Federal holidays.

Interested parties should be aware that a public meeting will be held on the Notice of Proposed Rulemaking on July 9, 1980 and that public hearings are scheduled to be held in Washington, D.C. over the period July 21–August 1, 1980 and in Chicago, Illinois over the period August 4–8, 1980. Mr. James A. Smith, whose address is listed above, can provide any additional information desired.

Issued in Washington, D.C. June 15, 1980.

Ruth C. Clusen,

Assistant Secretary for Environment.

[FR Doc. 80-19191 Filed 6-24-80; 8:45 am]

BILLING CODE 6450-01-M

federal register

Monday
June 30, 1980

Part III

OFFICE OF THE FEDERAL REGISTER

APPROVED INCORPORATIONS BY REFERENCE IN TITLES 28-41

Title 28
Chapter I—Department of Justice

Title 29
Chapter IV—Office of Labor Management Standards Enforcement, Department of Labor
Chapter V—Wage and Hour Division, Department of Labor
Chapter XVII—Occupational Safety and Health Administration, Department of Labor

Title 30
Chapter I—Mine Safety and Health Administration, Department of Labor
Chapter VII—Office of Surface Mining, Department of Labor

Title 33
Chapter I—United States Coast Guard, Department of Transportation

Title 34
Chapter I—Office for Civil Rights, Department of Education

Title 38
Chapter I—Veterans Administration

Title 39
Chapter I—United States Postal Service

Title 40
Chapter I—Environmental Protection Agency

Title 41
Chapter 50—Department of Labor
Chapter 101—General Services Administration

OFFICE OF THE FEDERAL REGISTER

1 CFR Part 51

Approval of Incorporations by Reference

AGENCY: Office of the Federal Register.

ACTION: Approval of incorporations by reference.

SUMMARY: The Director of the Federal Register has received requests from several agencies to approve materials incorporated by reference into Titles 28 through 41 of the *Code of Federal Regulations* (CFR). This document contains a table of items that have been approved by the Director.

EFFECTIVE DATE: The Director approves the following incorporations by reference for one year effective July 1, 1980, unless otherwise noted.

FOR FURTHER INFORMATION CONTACT: Rose Anne Lawson at (202) 523–4534.

SUPPLEMENTARY INFORMATION:

Authority. Each agency that wishes material incorporated by reference in the CFR to remain effective must annually submit to the Director a list of that material and the date of its last revision (1 CFR 51.13).

The materials included on the table below are incorporated by reference in the CFR under 5 U.S.C. 552(a) and 1 CFR Part 51. These procedures provide that material approved for incorporation by reference by the Director of the Federal Register has the same legal status as if it were published in full in the Federal Register.

Availability. Before an agency may incorporate by reference any material into the *Code of Federal Regulations,* it must make the material reasonably available to the class of persons affected by it. Agencies have indicated where you can obtain each item included in the table.

The materials approved for incorporation by reference are available for inspection and copying at the Office of the Federal Register, 1100 L St., N.W., Washington, D.C., (202) 523–5240.

Amendments. If the agency wishes to include any amendment to material already approved, the agency shall publish notice of the amendment in the Federal Register, and make the amendment available as indicated on the table or as modified in the notice of amendment. Amendments are not properly incorporated until notice is given in the Federal Register, the amendments are filed at the Office of the Federal Register and available to the public.

Problems. If you have any problems getting the material, notify the agency. If you find the material is not available, notify the Director of the Federal Register (NARS), Washington, D.C. 20408 or call (202) 523–4534.

Ernest J. Galdi,

Acting Director of the Federal Register.

28 CFR Part 45—*Department of Justice*

Producer/publisher and date of edition	Name of material	Address or address code	28 CFR, Part—
American National Standards Institute: ANSI A117.1-1961 (R 1971).	Specifications for making buildings and facilities accessible to, and useable by, the physically handicapped.	1430 Broadway, New York, N.Y. 10018.	45.522

29 CFR Chapter IV.—*Office of Labor—Management Standards Enforcement, Department of Labor*

Producer/publisher and date of edition	Name of material	Address or address code	
1. U.S. Department of Labor, Labor-Management Services Administration (LMSA).	Labor Organization Information Report (Form LM-1).	(1)	402.2
2. U.S. Department of Labor, Labor-Management Services Administration (LMSA).	Report of Current Status, Labor Organization Information Supplement (Form LM-1A).	(1)	402.4
3. U.S. Department of Labor, Labor-Management Services Administration (LMSA).	Labor Organization Annual Reports (Form LM-2 and LM-3).	(1)	403.3, 403.4
4. U.S. Department of Labor, Labor-Management Services Administration (LMSA).	Labor Organization Officer and Employee Report (Form LM-30).	(1)	404.3
5. U.S. Department of Labor, Labor-Management Services Administration (LMSA).	Employer Report (Form LM-10)	(1)	405.3
6. U.S. Department of Labor, Labor-Management Services Administration (LMSA).	Agreement and Activities Report (Form LM-20).	(1)	406.2
7. U.S. Department of Labor, Labor-Management Services Administration (LMSA).	Receipt and Disbursements Report (Form LM-21).	(1)	406.3
8. U.S. Department of Labor, Labor-Management Services Administration (LMSA).	Trusteeship Report (Form LM-15)	(1)	408.3

29 CFR Chapter IV.—*Office of Labor—Management Standards Enforcement, Department of Labor*—Continued

Producer/publisher and date of edition	Name of material	Address or address code	
9. U.S. Department of Labor, Labor-Management Services Administration (LMSA).	Schedule on Selection of Delegates and Officers (Form LM-15A).	(¹)	408.4
10. U.S. Department of Labor, Labor-Management Services Administration (LMSA).	Terminal Trusteeship Report (Form LM-16)	(¹)	408.5
11. U.S. Department of Labor, Labor-Management Services Administration (LMSA).	Surety Company Annual Report (Form LMSA-1).	(¹)	409.2

The Office of Labor-Management Standards Enforcement, LMSA, Room N-5603, U.S. Department of Labor, Frances Perkins Building, 200 Constitution Avenue NW., Washington, D.C. 20216

29 CFR Part 526.—*Wage and Hour Division, Department of Labor*

Producer/publisher and date of edition	Name of material	Address or address code	29 CFR, Part—
1. U.S. Department of Agriculture, Agricultural Marketing Service (for the Bureau of Agricultural Economics of the U.S. Department of Agriculture).	Tobacco in the United States—U.S. Department of Agriculture—Agricultural Marketing Service, Miscellaneous Publication No. 867—See page 2.	U.S. Government Printing Office (GPO) Bookstores, located throughout the United States.	526.10

29 CFR Part 570.—*Wage and Hour Division, Department of Labor*

Producer/Publisher and date of edition	Name of Material	Address or address code	29 CFR, Part—
Institute of Makers of Explosives, June 5, 1964.	The American Table of Distances	420 Lexington Ave., New York, N.Y. 10017	570.51
National Education Association, 1964 Rev. ed.	Standards for School Buses	1201 16th St. NW., Washington, D.C. 20036.	570.52
U.S. Department of Commerce, National Bureau of Standards, Handbook 69, 1959.	Maximum Permissible Body Burdens and Maximum Permissible Concentrations of Radionuclides in Air and in Water for Occupational Exposure.	U.S. Department of Commerce, National Bureau of Standards, Gaithersburg, MD. 20234.	570.57
National 4-H Council	Petroleum Power Program: Specified units from four training manuals on operation and use of tractors.	National 4-H Council, 7100 Connecticut Ave., Washington, D.C. 20015.	570.72 570.72
Michigan State University (for the Office of Education), Rural Manpower Center, Special Paper No. 8, April 1969.	Vocational Agriculture Training Programs: Safe Tractor Operation, Safe Farm Machinery Operation.	Michigan State University, Department of Secondary Education, East Lansing, Mich.	570.72 570.72 570.72
The Interstate Printers and Publishers, 1965.	Agricultural Engineering	Danville, Ill	570.71

29 CFR Chapter XVII.—*Occupational Safety and Health Administration*

[Copies of the documents listed in this table are available through the Technical Data Center, Department of Labor, Washington, D.C., and through regional offices of the Occupational Safety and Health Administration. For a complete listing of these addresses, see the end of the table.]

Producer/publisher; standard No.; date of edition; name of material	29 CFR, Part—
GENERAL INDUSTRY	
General Services Administration GG-B-00675: Air Compressed for Breathing Purposes, or Interim Federal Specs. April 1965.	1910.134
American Conference of Industrial Hygienist Manual "Industrial Ventilation" (1970)	1910.27
American Society of Agriculture Engineers Emblem for Identifying Slow Moving Vehicles ASAE S276.2 (1968).	1910.145
Agriculture Ammonia Institute (AAI) joint Agriculture Ammonia Institute-Rubber Manufacturers Association Specifications for Anhydrous Ammonia Hose. No Date Available.	1919.111
AMERICAN NATIONAL STANDARDS INSTITUTE (ANSI)	
ANSI A10.2—1944 Safety Code For Building Construction	1910.144
ANSI A10.3 (1970) Safety Requirements for Explosive-Actuated Fastening Tools	1910.243
ANSI A11.1 (1965, R1970) Practice for Industrial Lighting	1910.219; 178, 261, 265
ANSI A11.1 (1965) Practice for Industrial Lighting	1910.262; 265
ANSI A12.1 (1967) Safety Requirements for Floor and Wall Openings, Railings, and Toe Boards	1910.66; 68, 261, 264
ANSI A13.1 (1956) Scheme for the Identification of Piping Systems	1910.252; 261, 262; 264
ANSI A14.1 (1968) Safety Code for Portable Wood Ladders. Supplemented by ANSI A14.1a—1977	1910.261
ANSI A14.2 (1956) Safety Code for Portable Metal Ladders. Supplemented By ANSI A14.2a—1977	1910.261
ANSI A14.3 (1958) Safety Code for Fixed Ladders	1910.68; .179; .261
ANSI A17.1 (1965) Safety Code for Elevators, DumbWaiters and Moving Walks. Including Supplements: A17.1a (1967), A17.1a (1968) A17.1c (1969), A17.1d (1970).	1910.261
ANSI A17.2 (1960) Practice for the Inspection of Elevators Including Supplements: A17.2a (1965), A17.2b (1967).	1910.261
ANSI H3.1 (1970) Seamless Copper Water Tube Specifications	1910.110
ANSI A90.1 (1969) Safety Standard for Manlifts	1910.68
ANSI A92.2 (1969) Standard for Vehicle Mounted Elevating and Rotating work Platforms	1910.67, 268

29 CFR Chapter XVII.—*Occupational Safety and Health Administration—Continued*

Producer/publisher; standard No.; date of edition; name of material	29 CFR, Part—
ANSI A120.1 (1970) Safety Code for Powered Platforms for Exterior Building Maintenance	1910.66
ANSI B7.1 (1970) Safety Code for the Use, Care and Protection of Abrasive Wheels	1910.94; 215; 218; 221; 246
ANSI B11.1 (1971) Safety Code for Power Presses	1910.221
ANSI B15.1 (1953, R1958) Safety Code for Mechanical Power Transmission Apparatus	1910.68; 221; 261
ANSI B19.1 (1938) Safety Code for Compressed Air Machinery and Equipment	1910.170; 246
ANSI B20.1 (1957) Safety Code for Conveyors, Cableways, and Related Equipment	1910.218; 261; 265; 266
ANSI B24.1 (1971) Safety Code for Forging and Hot Metal Stamping	1910.221
ANSI B28.1 (1967) Safety Specifications for Mills and Calendars in the Rubber and Plastics industries.	1910.221
ANSI B30.1 (1943) Safety Code for Jacks	1910.246
ANSI B30.2 (1943, R1952) Safety Code for Crane, Derricks, and Hoists	1910.261
ANSI B30.2 (1943, R1968) Safety Code for Cranes, Derricks, and Hoists	1910.261
ANSI B30.2.0 (1967) Safety Code for Overhead and Gentry Cranes	1910.179; 261; 266
ANSI B30.5 (1968) Safety Code for Crawler, Locomotive, and Truck Cranes	1910.180; 261; 266
ANSI B30.6 (1969) Safety Code for Derricks	1910.181; 268
ANSI B31.1 (1955) Code for Pressure Piping	1910.261
ANSI B31.1.0 (1967) and Addenda B31.1.0a (1963) Code for Pressure Piping	1910.106; 218; 261
ANSI B31.2 (1968) Fuel Gas Piping	1910.103; 104; 106; 252; 261
ANSI B31.3 (1966) Petroleum Refinery Piping	1910.103; 106
ANSI B31.5 (1966) Addenda B31.1a (1969) Refrigeration Piping	1910.103
ANSI B56.1 (1969) Safety Standard for Powered Industrial Trucks	1910.178; 261
ANSI B57.1 (1965) Compressed Gas Cylinder Valve Outlet and Inlet Connections	1910.252
ANSI B71.1 (1968) Safety Specifications for Power Lawn Mowers	1910.243; 246
ANSI C1 (1971) National Electrical Code	1910.66; 68; 94; 178; 308; 309
ANSI C33.2 (1956) Safety Standard for Transformer-Type Arc Welding Machines	1910.252
ANSI D8.1 (1967) Practices for Railroad Highway Grade Crossing Protection	1910.265
ANSI H38.7 (1969) Specifications for Aluminum Alloy Seamless Pipe and Seamless Extruded Tube	1910.110
ANSI J6.1 (1950, R1962) Standard Specifications for Rubber Insulating Line Hose	1910.137
ANSI J6.2 (1950, R1962) Standard Specifications for Rubber Insulating Hood	1910.137
ANSI J6.4 (1970) Standard Specifications for Rubber Insulating Blankets	1910.137
ANSI J6.4 (1971) Standard Specifications for Rubber Insulating Blankets	1910.268
ANSI J6.5 (1962) Standard Specifications for Rubber Insulating Sleeves	1910.137
ANSI J6.6 (1967) Standard Specifications for Rubber Insulating Gloves	1910.137
ANSI J6.6 (1971) Standard Specifications for Rubber Insulating Gloves	1910.268
ANSI J6.7 (1935, R1962) Standard Specifications for Rubber Matting for Use Around Electric Apparatus.	1910.137
ANSI K13.1 (1967) Identification of Gas Mask Canisters	1910.261
ANSI K61.1 (1960) Safety Requirements for the Storage and Handling of Anhydrous Ammonia	1910.111
ANSI K61.1 (1966) Safety Requirements for the Storage and Handling of Anhydrous Ammonia	1910.111
ANSI L1.1 (1956) Textiles Safety Code	1910.274
ANSI O1.1 (1954, R1961) Safety Code for Woodworking Machinery	1910.221; 246; 261
ANSI O2.1 (1969) Safety Requirements for Sawmills	1910.274
ANSI O3.1 (1971) Pulpwood Logging	1910.274
ANSI P1.1 (1969) Safety Standard for Pulp, Paper, and Paperboard Mills	1910.274
ANSI Z4.1 (1968) Requirements for Sanitation in Places of Employment	1910.261; 264
ANSI Z4.2 (1942) Standard Specifications for Drinking Fountains	1910.142
ANSI Z8.1 (1961) Safety Code for Laundry Machinery and Operations	1910.274
ANSI Z9.1 (1951) Safety Code for Ventilation and Operation of Open Surface Tanks	1910.94; 261
ANSI Z9.2 (1960) Fundamentals Governing the Design and Operation of Local Exhaust Systems	1910.94; 261; 264
ANSI Z9.2 (1971) Fundamentals Governing the Design and Operation of Local Exhaust Systems	1910.1001
ANSI Z9.4 (1968) Ventilation and Safe Practices of Abrasives Blasting Operations	1910.246
ANSI Z12.12 (1968) Standard for the Prevention of Sulfur Fires and Explosions	1910.261; 265
ANSI Z12.20 (1962, R1969) Code for the Prevention of Dust Explosions in Woodworking and Wood Flour Manufacturing Plants.	1910.265
ANSI Z21.30 (1964) Requirements for Gas Appliances and Gas Piping Installations	1910.264; 265
ANSI Z24.22 (1957) Method of Measurement of Real-Ear Attenuation of Ear Protectors at Threshold.	1910.261
ANSI Z33.1 (1961) Installation of Blower and Exhaust Systems for Dust, Stock, and Vapor Removal or Conveying.	1910.261; 265
ANSI Z33.1 (1966) Installation of Blower and Exhaust Systems for Dust, Stock, and Vapor Removal or Conveying.	1910.94
ANSI Z35.1 (1968) Specifications for Accident Prevention Signs	1910.261
ANSI Z41.1 (1967) Men's Safety Toe Footwear	1910.94; 136; 261; 266
ANSI Z48.1 (1954) Method for Marking Portable Compressed Gas Containers To Identify the Material Contained.	1910.103; 110; 252
ANSI Z48.1 (1954, R1970) Method for Marking Portable Compressed Gas Containers To Identify the Material Contained.	1910.111; 134
ANSI Z49.1 (1957) Safety in Welding and Cutting	1910.252; 253
ANSI Z50.1 Safety Code for Bakery Equipment	1910.274
ANSI Z53.1 (1967) Safety Color Code for Marking Physical Hazards and the Identification of Certain Equipment.	1910.97; 145; 154
ANSI Z54.1 (1963) Safety Standard for Non-Medical X-Ray and Sealed Gamma Ray Sources	1910.252
ANSI Z87.1 (1968) Practice for Occupational and Educational Eye and Face Protection. Latest Version—Current.	1910.133; 252; 261
ANSI Z88.2 (1969) Practices for Respiratory Protection	1910.94; 134; 261; 266; 1001
ANSI Z89.1 (1969) Safety Requirements for Industrial Head Protection	1910.135; 261; 266
ANSI Z89.2 (1971) Safety Requirements for Industrial Protective Helmets for Electrical Workers, Class B.	1910.268

AMERICAN PETROLEUM INSTITUTE (API)

API 12A (Sep 1951) Specification for Oil Storage Tanks With Riveted Shells, 7th Edition	1910.106
API 650 (1966) Welded Steel Tanks for Oil Storage, 3rd Edition. (NOTE.—This publication is given tentative approval for the period July 1, 1980, to August 1, 1980 pending completion of review under 1 CFR 51.13.).	1910.106
API 12B (May 1958) Specification for Bolted Production Tanks, 11th Edition, With Supplement 1, March 1962.	1910.106
API 12D (August 1957) Specification for Large Welded Production Tanks, 7th Edition	1910.106
API 12F (March 1961) Specification for Small Welded Production Tanks 5th Edition	1910.106

29 CFR Chapter XVII.—*Occupational Safety and Health Administration—Continued*

Producer/publisher; standard No; date of edition; name of material	29 CFR, Part—
API Standard 620, Fourth Edition (1970) Including Appendix R. Recommended Rules for Design and Construction of Large Welded Low Pressure Storage Tanks.	1910 103; 106; 111
API 1104 (1968) Standard for Welding Pipelines and Related Facilities. (NOTE.—This publication is given tentative approval for the period July 1, 1980, to August 1, 1980 pending completion of review under 1 CFR 51.13.).	1910.252
API 2201 (1963) Welding or Hot Tapping on Equipment Containing Flammables	1910.252
API 2000 (1968) Venting Atmospheric and Low Pressure Storage Tanks	1910 106
AMERICAN SOCIETY OF MECHANICAL ENGINEERS (ASME)	
ASME Boiler and Pressure Vessel Code, 1949 Edition, Section VIII, Paragraph U-68 and U-69	1910 168
ASME Boiler and Pressure Vessel Code, Section VIII, 1949, 1950, 1952, 1956, 1959, and 1962 Editions. (NOTE.—This publication is given tentative approval for the period July 1, 1980, to August 1, 1980 pending completion of review under 1 CFR 51.13.).	1910 110, 168
ASME Code for Pressure Vessels, 1968 Edition	1910 106 217
ASME Boiler and Pressure Vessel Code, Section VIII, 1968. (NOTE.—This publication is given tentative approval for the period July 1, 1980, to August 1, 1980 pending completion of review under 1 CFR 51.13.).	1910 103, 104, 106; 111, 169
ASME Boiler and Pressure Vessel Code, Section VIII, Paragraph UG-84, 1968	1910 104
ASME Boiler and Pressure Vessel Code, Section VIII, Unfired Pressure Vessels, Including Addenda (1969).	1910.261, 262; 263
Code for Unfired Pressure Vessels for Petroleum Liquids and Gases of the API and the ASME, 1951 Edition.	1910.110; 168
AMERICAN SOCIETY FOR TESTING AND MATERIALS (ASTM)	
ASTM A47-68 Standard Specifications for Malleable Iron Castings	1910 111
ASTM A53-69 Standard Specification for Welded and Seamless Steel Pipe	1910 110; 111
ASTM A126-66 Standard Specification for Gray Iron Casting for Valves, Flanges and Pipe Fitting	1910.111
ASTM A391-65 (ANSI G61.1—1968)	1910 184
ASTM A395-68 Standard Specification for Ductile Iron for Pressure Containing Castings for Use at Elevated Temperatures.	1910.111
ASTM B88-66A Standard Specification for Seamless Copper Water Tube	1910.252
ASTM B88 (1969) Standard Specification for Seamless Copper Water Tube	1910 110
ASTM B117-64 Salt Spray (Fog) Test	1910.266
ASTM B210-68 Standard Specification for Aluminum-Alloy Drawn Seamless Tubes	1910 110
ASTM Procedures D1692-68, Standard Method of Test for Flammability of Plastic Sheeting and Cellular Plastics.	1910.103
ASTM D86-62 Standard Method of Test for Distillation of Petroleum Products (NOTE.—This publication is given tentative approval for the period July 1, 1980 to August 1, 1980 pending completion of review under 1 CFR 51.13.).	1910.106
ASTM D56-70 Standard Method of Test for Flash Point by Tag Closed Tester	1910.106
ASTM D93-71 Standard Method of Test for Flash Point by Pensky Martens	1910 106
ASTM D5-65 Test for Penetration by Bituminous Materials	1910 106
ASTM D88-56 Standard Method of Test for Saybolt Viscosity	1910 106
ASTM D2161-66 Conversion Tables For SUS	1910 106
ASTM D445-65 Standard Method of Test for Viscosity of Transparent and Opaque Liquids	1910 106
American Welding Society (AWS)	
AWS A3.0 (1969) Terms and Definitions	1910.251
AWS B3.0-41 Standard Qualification Procedure	1910 67
AWS A6.1 (1966) Recommended Safe Practices for Gas Shielded Arc Welding	1910.252
AWS D2.0-69 Specifications for Welding Highways and Railway Bridges	1910.67
AWS D8.4-61 Recommended Practices for Automotive Welding Design	1910.67
AWS D10.0-1966 Code for Welding in Building Construction	1910.27
AWS D10.9-69 Standard Qualification of Welding Procedures and Welders for Piping and Tubing	1910 67
Compressed Gas Association (CGA)	
CGA C-6 (1968) Standards for Visual Inspection of Compressed Gas Cylinders	1910 101, 157, 170
CGA C-8 (1962) Standard for Requalification of ICC-3HT Cylinders	1910 101; 168
CGA G-1 (1966) Acetylene	1910 102
CGA G-1.3 (1959) Acetylene Transmission for Chemical Synthesis	1910 102
CGA G-1.4 (1966) Standard for Acetylene Cylinder Charging Plants	1910.102
CGA G-7.1 (1966) Commodity Specification	1910.134
CGA G-8.1 (1964) Standard for the Installation of Nitrous Oxide Systems at Consumer Sites	1910 105
CGA P-1 (1965) Safe Handling of Compressed Gases	1910 101
CGA S-1.1 (1963) and 1965 Addenda. Safety Release Device Standards—Cylinders for Compressed Gases.	1910 103, 167; 170
CGA S-1.2 (1963). Safety Release Device Standards, Cargo and Portable Tanks for Compressed Gases.	1910 101; 103, 167, 168, 170
CGA S-1.3 (1959) Safety Release Device Standards—Compressed Gas Storage Containers	1910 103; 104; 111
CGA and RMA (Rubber Manufacturer's Association) Specification for Rubber Welding Hose (1958)	1910.252
CGA 1957 Standard Hose Connection Standard	1910.252
CGA 1958 Regulator Connection Standard	1910.252
CGA Specifications, Properties, and Recommendations for Packaging, Transportation, Storage and Use of Ammonium Nitrate.	1910.109
CRANE MANUFACTURER'S ASSOCIATION OF AMERICA, INC. (CMAA)	
CMAA Specification #61, Specifications for Electric Overhead Traveling Cranes	1910.179
INSTITUTE OF MAKERS OF EXPLOSIVES (IME)	
IME Pamphlet #17, 1960, Safety in the Handling and Use of Explosives	1910.261

29 CFR Chapter XVII.—*Occupational Safety and Health Administration—Continued*

Producer/publisher; standard No.; date of edition; name of material	29 CFR, Part—
NATIONAL ELECTRICAL MANUFACTURER'S ASSOCIATION (NEMA)	
NEMA EW-1 (1962) Requirements for Electric Arc Welding Apparatus	1910.252
NATIONAL FIRE PROTECTION ASSOCIATION (NFPA)	
NFPA 10—1970 Standard for the Installation of Portable Fire Extinguishers	1910.108; 109
NFPA 10A (1970) Maintenance and Use of Portable Fire Extinguishers	1910.157
NFPA 11—1970 Standard for Foam Extinguishing Systems	1910.108
NFPA 12—1968 Standard on Carbon Dioxide Extinguishing Systems (ANSI A54.1—1968)	1910.108; 161
NFPA 13—1969 Standard for the Installation of Sprinkler Systems	1910.107; 109; 159
NFPA 14—1970 Standard for the Installation of Stand Pipe and Hose Systems	1910.109; 158
NFPA 15—1969 Standard for Water Spray Fixed Systems for Fire Protection	1910.108
NFPA 17—1969 Standard for Dry Chemical Extinguishing Systems	1910.108; 160
NFPA 22 (1970) Standard for Water Tanks for Private Fire Protection	1910.158
NFPA 30 (1969) Flammable and Combustible Liquids Code	1910.178
NFPA 32—1970 Standard for Dry Cleaning Plants	1910.106
NFPA 33—1969 Standard for Spray Finishing Using Flammable and Combustible Material	1910.94
NFPA 34—1966 Standard for Dip Tanks Containing Flammable or Combustible Liquids	1910.94
NFPA 35—1970 Standard for the Manufacture of Organic Coatings	1910.106
NFPA 336—1967 Standard for Solvent Extraction Plants	1910.106
NFPA 37—1970 Standard for the Installation and Use of Stationery Combustion Engines and Gas Turbines.	1910.106; 110
NFPA 51—1969 Standard for the Installation and Operation of Oxygen Fuel Gas Systems for Welding and Cutting.	1910.253
NFPA 51B—1962 Standard for Fire Protection in Use of Cutting and Welding Processes	1910.252; 253
NFPA 54—1969 Standard for the Installation of Gas Appliances and Gas Piping	1910.100; 110
NFPA 54A-69 Standard for the Installation of Gas Piping and Gas Equipment on Industrial Premises and Certain Other Premises.	1910.110
NFPA 58—1969 Standard for the Storage and Handling of Liquefied Petroleum Gases. (ANSI Z106.1—1970).	1910.168; 178
NFPA 59—1968 Standard for the Storage and Handling of Liquefied Petroleum Gases at Utility Gas Plants.	1910.110
NFPA 62—1967 Standard for the Prevention of Dust Explosions in the Production, Packaging, and Handling of Pulverized Sugar and Cocoa.	1910.263
NFPA 68—1954 Guide for Explosion Venting	1910.94
NFPA 70—1971 National Electrical Code	1910.66; 68; 94; 103; 178
NFPA 72A (1967) Standard for the Installation, Maintenance and Use of Local Protective Signaling Systems for Watchmen, Fire Alarms, and Supervisory Service.	1910.163
NFPA 78 (1968) Lightning Protection Code	1910.109
NFPA 80—1968 Standard for Fire Doors and Windows	1910.106
NFPA 80—1970 Standard for Fire Doors and Windows	1910.252
NFPA 86A—1969 Standard for Oven and Furnaces Design, Location and Equipment	1910.107; 108
NFPA 91—1961 Standard for the Installation of Blower and Exhaust Systems for Dust, Stock, and Vapor Removal or Conveying (ANSI Z33.1—1961).	1910.107
NFPA 96—1970 Standard for the Installation of Equipment for the Removal of Smoke and Grease Laden Vapors from Commercial Cooking Equipment.	1910.110
NFPA 101—1970 Code for Life Safety From Fire in Buildings and Structures	1910.261
NFPA 194 (1968) Standard for Screw Threads and Gaskets for Fire Hose Couplings	1910.158
NFPA 198 (1969) Care of Fire Hose	1910.158
NFPA 203M (1970) Manual on Roof Coverings	1910.109
NFPA 251—1969 Standard Methods of Fire Tests of Building Construction and Materials	1910.106
NFPA 302—1968 Fire Protection Standard for Motor—Craft (Pleasure and Commercial)	1910.265
NFPA 385—1966 Recommended Regulatory Standard for Tank Vehicles for Flammable and Combustible Liquids.	1910.106
NFPA 496—1967 Standard for Purged Enclosures for Electrical Equipment in Hazardous Locations	1910.103
NFPA 505—1969 Standard for Type Designations, Areas of Use, Maintenance, and Operation of Powered Industrial Trucks.	1910.110; 189
NFPA 566—1965 Standard for the Installation of Bulk Oxygen Systems at Consumer Sites	1910.252
NFPA 656—1959 Code for the Prevention of Dust Ignition in Spice Grinding Plants	1910.263
NATIONAL FOOD PLANT INSTITUTE	
Definition and Test Procedures for Ammonium Nitrate Fertilizer (Nov. 1964)	1910.109
NATIONAL INSTITUTES OF OCCUPATIONAL SAFETY AND HEALTH (NIOSH)	
NIOSH (1978) Registry of Toxic Effects of Chemical Substances	1910.20
SOCIETY OF AUTOMOTIVE ENGINEERS (SAE)	
SAE 765 (1961) SAE Recommended Practice: Crane Landing Stability Test Code	1910.180
THE FERTILIZER INSTITUTE	
Standard M-1 (1953, 1955, 1957, 1960, 1961, 1963, 1965, 1966, 1967, 1968), Superseded by ANSI K61.1—1972.	1910.111
UNDERWRITERS LABORATORIES (UL)	
UL Subject 142 (1968) Standard for Steel Above Ground-Tanks for Flammable and Combustible Liquids.	1910.106
UL Subject 58 (Dec. 1961) Standard for Steel Underground Tanks for Flammable and Combustible Liquids, 5th Edition.	1910.106
UL Subject 80 (Sep. 1963) Standard for Steel Inside Tanks for Oil-Burner Fuel	1910.106

29 CFR Chapter XVII.—*Occupational Safety and Health Administration—Continued*

Producer/publisher; standard No.; date of edition; name of material	29 CFR, Part—
U.S. DEPARTMENT OF COMMERCE	
U.S. Department of Commerce Commercial Standard CS 202-56 (1961) "Industrial Lifts and Hinged Loading Ramps".	1910.30
U.S. PUBLIC HEALTH SERVICE	
U.S. Pharmacopoeia	1910.134
U.S. Public Health Service Publication No. 934 (1962) Food Service Sanitation Ordinance and Code, Part V of the Food Service Sanitation Manual.	1910.142
AMERICAN CONFERENCE OF GOVERNMENTAL INDUSTRIAL HYGIENISTS (ACGIH)	
ACGIH Threshold Limit Values (1974)	1915.11, 21, 1916.21; 1917.11
AMERICAN NATIONAL STANDARDS INSTITUTE (ANSI)	
ANSI A14.1—1959 Safety Code for Portable Wood Ladders	1915.42; 1916.42; 1917.42
ANSI A14.2—1956 Safety Code for Portable Metal Ladders	1915.42, 1916.42, 1917.42
ANSI B7.1—1964 Safety Code for the Use, Care and Protection of Abrasive Wheels	1915.74, 1916.74
ANSI Z2.1—1959 Safety Code for Head, Eye, and Respiratory Protection	1915.81, 83; 1916.81, 83; 1917.81, 83
ANSI Z89.1—1969 Safety Requirements for Industrial Head Protection	1916.105
ANSI Z87.1—1968 Practice for Occupational and Educational Eye and Face Protection	1916.101
AMERICAN SOCIETY OF MECHANICAL ENGINEERS (ASME)	
ASME Boiler and Pressure Vessel Code, Section XIII, Rules for Construction of Unfired Pressure Vessels, 1963.	1915.101; 1916.101
AMERICAN NATIONAL STANDARDS INSTITUTE (ANSI)	
ANSI A10.3—1970 Safety Requirements for Explosive-Actuated Fastening Tools	1926.302
ANSI A10.4—1953 Safety Requirements for Workmen's Hoists	1926.552
ANSI A10.5—1959 Safety Requirements for Material Hoists	1926.552
ANSI A10.9—1970 Safety Requirements for Concrete Construction and Masonry Work	1926.700
ANSI A11.1—1965 (R2970) Practices for Industrial Lighting (IES RP7-1965)	1926.56
ANSI A14.1—1958 Safety Code for Portable Wood Ladders	1926.450; 451
ANSI A14.2—1956 Safety Code for Portable Wood Ladders	1926.450; 451
ANSI A14.3—1956 Safety Code for Fixed Ladders	1926.450
ANSI A17.1—1965 Safety Code for Elevators, Dumbwaiters and Moving Walks	1926.552
ANSI A17.1a—1967 Supplement to A17.1—1965	1926.552
ANSI A17.1b—1968 Supplement to A17.1—1965 and A17.1a—1967	1926.552
ANSI A17.1c—1969 Supplement to A17.1—1965, A171.a—1967, and A17.1b—1968	1926.552
ANSI A17.1d—1970 Supplement to A17.1—1965, A17.1a—1967, and A17.1b—1968 and A17.1c—1959.	1926.552
ANSI A17.2—1960 Practice for the Inspection of Elevators (Inspector's Manual)	1926.552
ANSI A17.2a—1965 Addenda to A17.2—1960	1926.552
ANSI A17.2b—1967 Supplement to A17.2—1960	1926.552
ANSI A92.2—1959 Vehicle Mounted Elevating and Rotating Work Platforms	1926.451, 556
ANSI A120.1—1970 Safety Code for Power-Operated Platforms Used for Exterior Building Maintenance.	1926.451
ANSI B7.1—1970 Safety Code for the Use, Care and Protection of Abrasive Wheels	1926.303
ANSI B15.1—1953 Safety Code for Mechanical Power-Transmission Apparatus	1926.300; 550
ANSI B20.1—1957 Safety Code for Conveyors, Cableways and Related Equipment	1926.555
ANSI B30.2.0—1967 Safety Code for Overhead and Gantry Cranes (Partial Revision of B30.2—1943)	1926.550
ANSI B30.5—1968 Safety Code for Crawler, Locomotive and Truck Cranes (Partial Revision of B30.2—1943).	1926.550
ANSI B30.6—1969 Safety Code for Derricks (Partial Revision of B30.2—1943)	1926.550
ANSI B56.1—1969 Safety Standards for Powered Industrial Trucks (ISO R1074)	1926.602
ANSI D6.1—1971 Manual on Uniform Traffic Control Devices for Streets and Highways	1926.200; 201; 202
ANSI J6.6—1971 Rubber Insulating Gloves	1926.95
ANSI J6.7—1935 Rubber Matting for Use Around Electrical Apparatus	1926.951
ANSI J6.4—1971 Rubber Insulating Blankets	1926.951
ANSI J6.2—1950 (R1971) Rubber Insulating Hoods	1926.951
ANSI J6.1—1950 (R1971) Rubber Insulating Line Hose	1926.951
ANSI J6.5—1971 Rubber Insulating Sleeves	1926.951
ANSI 01.1—1961 Safety Code for Woodworking Machinery	1926.304
ANSI Z35.1—1968 Specifications for Accident Prevention Signs	1926.200
ANSI Z35.2—1968 Specifications for Accident Prevention Tags	1926.200
ANSI Z49.1—1967 Safety in Welding and Cutting	1926.350
ANSI Z87.1—1968 Practice for Occupational and Educational Eye and Face Protection (Partial Revision of Z2.1—1959).	1926.102
ANSI Z89.1—1969 Safety Requirements for Industrial Head Protection	1926.100
ANSI Z89.2—1971 Safety Requirements for Industrial Protective Helmets for Electrical Workers, Class B.	1926.100; 951
AMERICAN SOCIETY OF AGRICULTURAL ENGINEERS (ASAE)	
ASAE R313 Soil Cone Penetrometer, 1971	1926.1002

29 CFR Chapter XVII.—*Occupational Safety and Health Administration—Continued*

Producer/publisher; standard No.; date of edition; name of material	29 CFR, Part—
AMERICAN SOCIETY OF MECHANICAL ENGINEERS (ASME)	
Power Boilers (Section I), 1968	1926.603
Pressure Vessels (Section VIII), 1968	1926.603
AMERICAN SOCIETY FOR TESTING AND MATERIALS (ASTM)	
ASTM A370-68 Standard Methods and Definitions for Mechanical Testing of Steel Products	1926.1001
ASTM B117-64 (50 Hour Test)	1926.959
ASTM D56-69 Standard Method of Test for Flash Point by the Tag Closed Tester	1926.155
ASTM D93-69 Standard Method of Test for Flash Point by the Pensky-Martens Closed Tester	1926.155
ASTM D323-58 (R-68) Standard Method of Test for Vapor Pressure of Petroleum Products (Reid Method).	1926.155
AMERICAN WELDING SOCIETY (AWS)	
AWS B3.0-41. Standard Qualification Procedure	1926.556
AWS D2.0-69. Specifications for Welding Highway and Railway Bridges	1926.556
AWS D8.4-61 Recommended Practice for Automotive Welding Design	1926.556
AWS D10.9-69. Standard Qualification for Welding Procedures and Welders for Piping and Tubing	1926.556
INSTITUTE OF MAKERS OF EXPLOSIVES (IME)	
IME Publication No. 2, June 5, 1964, American Table of Distances for Storage of Explosives	1926.914
IME Publication No. 20, March 1968, Radio Frequency Energy—A Potential Hazard in the Use of Electric Blasting Caps.	1926.900
NATIONAL FIRE PROTECTION ASSOCIATION (NFPA)	
NFPA 10A-1970 Recommended Good Practice for the Maintenance and Use of Portable Fire Extinguishers.	1926.150
NFPA 13-1969 Standards for the Installation of Sprinkler Systems	1926.152
NFPA 30-1969 Flammable and Combustible Liquid Code, Chapters III and IV	1926.152
NFPA 70-1971 National Electrical Code (ANSI C1-1971)	1926.151; 351; 400; 401; 404; 803
NFPA 80-1970 Standards for Fire Doors and Windows	1926.152
NFPA 251-1969 Standard Methods of Fire Tests of Building Construction and Materials	1926.151; 155
NFPA 385-1966 Recommended Regulatory Standards for Tank Vehicles and Flammable and Combustible Liquids.	1926.152
POWER CRANE AND SHOVEL ASSOCIATION (PCSA)	
PCSA Standard No. 1-1968 Mobile Crane and Excavator Standards	1926.602
PCSA Standard No. 2-1968 Mobile Hydraulic Crane Standards	1926.550; 602
PCSA Standard No. 3-1968 Mobile Hydraulic Excavator Standards	1926.602
SOCIETY OF AUTOMOTIVE ENGINEERS (SAE)	
SAE Handbook-1971	1926.1001; 1002
SAE Handbook-1970, pages 1088-1103 (Nomenclature and Description)	1926.602
SAE J166-1971 Minimum Performance Criteria for Brake Systems for Off-Highway Trucks and Wagons.	1926.602
SAE J167-1971 Protective Frame Wire Overhead Protection—Test Procedures and Performance Requirements.	1926.1003
SAE J168 (July 1970) Protective Enclosures—Test Procedures and Performance Requirements	1926.1002
SAE J236-1971 Minimum Performance Criteria for Brake Systems for Rubber-Tire Self-Propelled Graders.	1926.602
SAE J237—1971 Minimum Performance Criteria for Brake Systems for Off-Highway Rubber-Tired Front End Loaders and Dozers.	1926.602
SAE J319b—1971 Minimum Performance Criteria for Brake Systems for Off-Highway Rubber-Tired Self-Propelled Scrapers.	1926.602
SAE J320a—1971 Minimum Performance Criteria for Roll-Over Protective Structures for Rubber-Tired Self-Propelled Scrapers.	1926.1001
SAE J321a—1970 Fenders for Pneumatic-Tired Earthmoving Haulage Equipment	1926.602
SAE J333a—1970 Operation Protection in Wheel-Type Agricultural and Industry Tractors	1926.602; 1002
SAE J334a—1970 Protective Frame Procedures and Performance Requirements	1926.1002
SAE J386—1969 Seat Belt for Construction Equipment	1926.602
SAE J394—1971 Minimum Performance Criteria for Roll-Over Protective Structure for Rubber-Tired Front End Loaders and Rubber-Tired Dozers.	1926.1001
SAE J395—1971 Minimum Performance Criteria for Roll-Over Protective Structure Crawler Tractors and Crawler-Type Loaders.	1926.1001
SAE J396—1971 Minimum Performance Criteria for Roll-Over Protective Structure for Motor Graders.	1926.1001
SAE J397—1969 Critical Zone-Characteristics and Dimensions for Operators of Construction and Industrial Machinery.	1926.1001
SAE J743a—1964 Tractor Mounted Side Boom	1926.550
SAE J959—1966 Lifting Crane Wire-Rope Strength Factors	1926.550
U.S. AND STATE STANDARDS	
Bureau of Reclamation (Dept. of Interior) Safety and Health Regulations for Construction (September 1971).	1926.1000
General Services Administration QQ-P-416 Federal Specification Plating Cadmium (Electrodeposited).	1926.104
National Bureau of Standards (Dept. of Commerce) PS 1-66 American Plywood Association (1959); PS 20-79 American Softwood Lumber Association, 1970.	1926.451
U.S. Army Corps of Engineers EM-385-1-1 (March 1967) General Safety Requirements	1926.100
California. State of California Construction Safety Orders, Department of Industrial Relations: Division 5, Labor Code, Section 6312.	1926.1000

29 CFR Chapter XVII.—*Occupational Safety and Health Administration—Continued*

Producer/publisher, standard No., date of edition, name of material	29 CFR, Part—
AMERICAN SOCIETY OF AGRICULTURAL ENGINEERS (ASAE)	
ASAE R313.1, 1971 Soil Cone Penetrometer	1928.92, 93
SOCIETY OF AUTOMOTIVE ENGINEERS (SAE)	
SAE J4C, 1955 Motor Vehicle Seat Belt Assembly	1928.51
SAE J674, 1963 Safety Glazing Materials	1928.53

ADDRESSES

Technical Data Center: Frances Perkins Department of Labor Building, Room N2439, 200 Constitution Avenue NW., Washington, D.C. 20210.

Boston Regional Office—Region I: Donald MacKenzie, Regional Administrator, U.S. Department of Labor—OSHA, 16-18 North Street, 1 Dock Square Building, 4th Floor, Boston, Massachusetts 02109.

New York Regional Office—Region II: Nicholas DiArchangel, Acting Regional Administrator, U.S. Department of Labor—OSHA, 1515 Broadway (1 Astor Plaza), Room 3445, New York, New York 10036.

Philadelphia Regional Office—Region III: David H. Rhone, Regional Administrator, U.S. Department of Labor—OSHA, Gateway Building, Suite 2100, 3535 Market Street, Philadelphia, Pennsylvania 19104.

Atlanta Regional Office—Region IV: Robert A. Wendell, Regional Administrator, U.S. Department of Labor—OSHA, 1375 Peachtree Street, NE., Suite 587, Atlanta, Georgia 30309.

Chicago Regional Office—Region V: Ronald McCann, Acting Regional Administrator, U.S. Department of Labor—OSHA, 32nd Floor, Room 3263, 230 South Dearborn Street, Chicago, Illinois 60604.

Dallas Regional Office—VI: Gilbert J. Saulter, Regional Administrator, U.S. Department of Labor—OSHA, 555 Griffin Square Bldg., Room 602, Dallas, Texas 75202.

Kansas City Regional Office—Region VII: Vernon A. Strahm, Regional Administrator, U.S. Department of Labor—OSHA, 911 Walnut Street, Room 3000, Kansas City, Missouri 64106.

Denver Regional Office—Region VIII: Curtis Foster, Regional Administrator, U.S. Department of Labor—OSHA, Federal Building, Room 1554, 1961 Stout Street, Denver, Colorado 80294.

San Francisco Regional Office—Region IX: Gabriel Gillotti, Regional Administrator, U.S. Department of Labor—OSHA, 11349 Federal Building, 450 Golden Gate Avenue, P.O. Box 36017, San Francisco, California 94102.

Seattle Regional Office—Region X: James W. Lake, Regional Administrator, U.S. Department of Labor—OSHA, Federal Office Bldg., Room 6003, Seattle, Washington 98174.

30 CFR Chapter I.—*Mine Safety and Health Administration, Department of Labor*

Producer/publisher and date of edition	Name of material	Address or address code	30 CFR
American Conference of Government Industrial Hygienists:			
1973 edition, pp. 1-54	TLV's Threshold Limit Values for Chemical Substances in Workroom Air.	(1)	55.5-1, 56.5-1; 57.5-1
1972	Threshold Limit Values of Airborn Contaminants.	(1 b c d)	71.200(a), 75.301-2
American National Standards Institute:			
ANSI B57.1—1965	Compressed Gas Cylinder Valve Outlet and Inlet Connections.	(1)	11.80
ANSI F432—1977 [1]	Specifications for Roof Bolting Materials in Coal Mines.	(1)	75.200-7
ANSI K13.1—1973	Identification of Air Purifying Respirator Canisters and Cartridges.	(1 d)	11.93
ANSI M11.1—1960 [1]	Specifications for Use of Wire Rope for Lines.	(1 b)	77.1402-1; 77.1903
ANSI N13.8—1973	Radiation Protection in Uranium Mines	(1 d)	57.5-37, 57.5-40; 57.5-47
ANSI S1.4—1971	General Purpose Sound Level Meters	(1 c d)	55.5-50, 56.5-50; 57.5-50, 70.500(a); 70.505
ANSI Z88.2—1969	Practices for Respiratory Protection	(1 d)	11.2-1, 11.4; 55.5-5; 56.5-5, 57.5-5
American Society of Mechanical Engineers—Boiler and Pressure Vessel Code:			
1971 edition	Boiler and Pressure Vessel Code	(1 b)	77.411
1971 edition, Section VIII	Unfired Pressure Vessels	(1 b)	75.1700
1977 edition	Standards for the Construction, Installation, and Maintenance of Boilers and Pressure Vessels and for Keeping Records of Inspections and Repairs.	(1 b)	55.13-1, 55.13-30; 56.13-1, 56.13-30; 57.13-1, 57.13-30
1977 edition, Sections I-VII	Standards for the Installation, Operation and Maintenance of Fired Pressure Vessels (Boilers) Safety Devices.	(1 b)	55.13-33, 56.13-30; 57.13-30
American Society for Testing and Materials:			
Part 28-1968 [1]	Rubber Protected Equipment	(1 b)	75.705-8; 77.704-8
E-84; E-162—1968	Flame Spread Index	(1 b)	75.302-3
American Welding Society: AWS D1.1-1973.	Structural Welding Code	(1 b)	77.403, 77.403a
Bureau of Mines:			
Instruction Guides No. 2—1972.	MSAW-65 Self-Rescuer	(1)	57.18-28(b)
Instruction Guide No. 3—1972	Permissible Drager 810 Respirator for Self-Rescue.	(1)	57.18-28(b)
Instruction Guide No. 19—1972.	Mine Emergency Training	(1)	57.18-28(a)

30 CFR Chapter I.—*Mine Safety and Health Administration, Department of Labor*—Continued

Producer/publisher and date of edition	Name of material	Address or address code	30 CFR
California, State of			
California Administrative Code:			
Title 8, Article 7, Sec. 5243 (Register 69, No. 10-3-8-69).	Tractor Yarding	(c h)	55.9-88; 56.9-88; 57.9-88
Title 8, Article 10, Secs. 1591(i) and 1596 (Register 70, No. 40-10-3-70).	Haulage and Earth Moving General Industry Safety Orders.	(c h)	55.9-88; 56.9-88; 57.9-88
Title 8, Article 25, Secs. 3650-3655 (Register 72, No. 6-2-5-72).	Industrial Trucks, Tractors, Haulage Vehicles, and Earth Moving Equipment and Logging and Sawmill Safety Orders.	(c h)	55.9-88; 56.9-88; 57.9-88
General Safety Orders:			
Article 25, Section 3655 (Register 72, No. 6, Feb. 8, 1972).	Overhead Guards for High-Lift Rider Trucks	(a h)	77.403
Division 5 Labor Code, Sec. 6312 1974.	Construction Safety Order 1591l, 1596	(a h)	77.403a
	Logging and Sawmill Safety Order 5243	(a h)	77.403a
Federal Specification Standard: GGG-M-125d—1965.	Federal Specification, Mask, Air line, and Respirator, Air Filtering, Industrial.	(c i)	11.76, 11.99, 11 116, 11.179
Institute of Electrical and Electronics Engineers, Inc.: IEEE Standard No. 32—1972.	Requirements, Terminology, and Test Procedure for Neutral Grounding Devices.	(a b n)	75.1719-2; 77.801-1; 77.901-1
Military Specification: MIL-F-15160D.	Fuses; Instrument, Power, and Telephone	(l k)	28.31
Military Standards:			
MIL-STD-105D	Sampling Procedures and Tables for Inspection by Attributes.	(l k)	11.41; 11.43; 29.41
MIL-STD-248		(a h)	77.403; 77.403a
MIL-STD-414	Sampling Procedures and Tables for Inspection by Variables for Percent Defective.	(l k)	11.41; 11.43; and 29.41
Mine Safety and Health Administration: MSHA Information Report No. 1121-1980	Standard Calibration and Maintenance Procedures for Wet test Meters and Coal Mine Respirable Dust Samples.	(a h)	70.204(a)
National Board Inspection Code:			
1979 edition	Standards for the Inspection of Compressed-Air Receivers and Other Unfired Pressure Vessels and Standards for the Retention of Records of Inspections.	(c f)	55.13-15; 56.13-15; 57.13-15
1979 edition, Secs. I-V and Appendix A-F	Standards for the Design, Installation, Operation of Fired Pressure Vessels Safety Devices.	(c f)	55.13-30; 56.13-30; 57.13-30
1977 edition	Standards for the Retention of Records of of Inspections and Repairs.	(c f)	55.13-30; 56.13-30; 57.13-30
National Building Code: 1967 edition.	Construction Requirements for Bathing, Toilet, and Change Room Facilities.	(a b n)	71.402 (b); 75.1712-3
National Electrical Code (NFPA): 1968 edition.	National Electrical Code	(a b c n)	55.12-45; 55.12-48; 56.12-45; 56.12-48; 57.12-45; 57.12-48; 75.513; 75.518-1, 77.301; 77.503-1; 77.506-1; 77.516; 77.901
National Electrical Safety Code:			
Part 2—1061 and Supp, 2—1968.	Safety Rules for the Installation and Maintenance of Electric Supply and Communication Lines.	(c d)	55.12-47; 56.12-47; 57.12-47
1971 edition	High Voltage Powerlines; Minimum Vertical Clearance.	(a b)	77.807-1
National Fire Protection Association:			
NFPA 11A—1970 [1]	High Expansion Foam Systems	(a b)	75.1107-16
NFPA 13—1968-1969 [1]	Installation of Sprinkler Systems	(a b)	75.1101-7
NFPA 13A—1971	Care and Maintenance of Sprinkler Systems	(a b)	75 1107-16
NFPA 15—1969 [1]	Water Spray Fixed Systems for Fire Protection.	(a b)	75 1107-16
NFPA 17—1969 [1]	Dry Chemical Extinguishing Systems	(a b)	75 1107-16
NFPA 22—1971	Water Tanks for Private Fire Protection	(a b)	75 1107-3; 75 1107-13
NFPA 30—1969	Storage of Flammable Liquids	(l)	57 4-4, 77 1103(a)
NFPA 72A—1967 [1]	Local Protective Signaling Systems	(a b)	75 1103-2; 75 1107-4, 75 1107-16
NFPA 198—1969 [1]	Care of Fire Hose	(a b)	75 1107-16

30 CFR Chapter I.—*Mine Safety and Health Administration, Department of Labor*—Continued

Producer/publisher and date of edition	Name of material	Address or address code	30 CFR
NFPA 252—1972	Standard Method of Fire Tests of Door Assemblies.	(1)	57.2
NFPA 395—1972	Storage of Quantities of Flammable Liquid	(1)	77.1103
National Plumbing Code. ANSI-ASA 40.8—1955.	Plumbing and surface requirements for bathing, toilet, and change room facilities and plumbing requirements for drinking water	(1)	71.402(b), 71.602(a), 75.1712-3
Society of Automotive Engineers:			
SAE J40—1955 edition; 1965 rev.	Motor Vehicle Seat Belt Assemblies	(1)	55.9-88, 56.9-88, 57.9-88
SAE J140a—1970 edition; 1973 rev.	Seat Belt Hardware Test Procedures	(1)	55.9-88, 56.9-88, 57.9-88
SAE J141—1968 edition; 1970 rev.	Seat Belt Hardware Performance Requirements.	(1)	55.9-88, 56.9-88, 57.9-88
SAE J167—1974 edition	Protective Frame With Overhead Protection—Test Procedures and Performance Requirements.	(1)	77.403, 77.403a
SAE J320a—1967 edition; 1969 revision; 1970 editorial change.	Roll-over Protective Structures for Rubber-Tired Self-Propelled Scrapers.	(1)	55.9-88, 56.9-88, 57.9-88, 77.403, 77.403a
SAE J320b—1967 edition; 1972 revision; 1972 editorial change.	Roll-Over Protective Structures for Prime Movers.	(1)	55.9-88, 56.9-88, 57.9-88
SAE J333a—1968 edition; 1970 rev.	Operator Protection for Wheel Type Agricultural and Industrial Tractors.	(1)	55.9-88, 56.9-88, 57.9-88
SAE J334a—1968 edition; 1970 rev.	Protective Frame Procedure and Performance Requirements.	(1)	55.9-88, 56.9-88, 57.9-88
SAE J386—1968 edition	Seat Belts for Construction Equipment	(1)	55.9-88, 56.9-88, 57.9-88
SAE J394—1969 edition; 1970 editorial change.	Roll-Over Protective Structure for Rubber-Tired Front-End Loaders and Rubber-Tired Dozers.	(1)	55.9-88, 56.9-88, 57.9-88, 77.403, 77.403a
SAE J394a—1969 edition; 1972 revision; 1972 editorial change.	Roll-Over Protective Structures for Wheeled Front-End Loaders and Wheeled Dozers.	(1)	55.9-88, 56.9-88, 57.9-88, 77.403, 77.403a
SAE J395—1969 edition; 1970 editorial change.	Roll-Over Protective Structures for Crawler Tractors and Crawler-Type Loaders.	(1)	55.9-88, 56.9-88, 57.9-88, 77.403, 77.403a
SAE J395a—1969 edition; 1972 revision; 1972 editorial change.	Roll-Over Protective Structures for Track-Type Tractors and Track-Type Front-End Loaders.	(1)	55.9-88, 56.9-88, 57.9-88, 77.403, 77.403a
SAE J396—1969 edition; 1970 editorial change.	Roll-Over Protective Structure for Motor Graders.	(1)	55.9-88, 56.9-88, 57.9-88, 77.403, 77.403a
SAE J396a—1969 edition; 1972 revision; 1972 editorial change.	Roll-Over Protective Structures for Motor Graders.	(1)	55.9-88, 56.9-88, 57.9-88, 77.403, 77.403a
SAE J397—1969 edition	Critical Zone-Characteristics and Dimensions for Operators of Construction and Industrial Machinery.	(1)	55.9-88, 56.9-88, 57.9-88, 77.403, 77.403a
SAE J397a—1969 edition; 1972 revision; 1973 editorial change.	Deflection Limiting Volume for Laboratory Evaluation of Roll-Over Protective Structures (ROPS) and Falling Object Protective Structures (FOPS) of Construction and Industrial Vehicles.	(1)	55.9-88, 56.9-88, 57.9-88, 77.403, 77.403a
SAE J429d—1967 edition	Mechanical and Quality Requirements for Externally Threaded Fasteners.	(1)	77.403, 77.403a
SAE J429e—1969 edition	Mechanical and Quality Requirements for Externally Threaded Fasteners.	(1)	77.403, 77.403a
SAE J429f—1971 edition	Mechanical and Quality Requirements for Externally Threaded Fasteners.	(1)	77.403, 77.403a
SAE J429g—1977 edition	Mechanical and Quality Requirements for Externally Threaded Fasteners.	(1)	77.403, 77.403a
SAE J995—1967 edition	Mechanical and Quality Requirements for Steel Nuts.	(1)	77.403, 77.403a
SAE J995a—1969 edition	Mechanical and Quality Requirements for Steel Nuts.	(1)	77.403, 77.403a
SAE J995b—1971 edition	Mechanical and Quality Requirements for Steel Nuts.	(1)	77.403, 77.403a
SAE J1040—1974 edition	Performance Criteria for Roll-Over (ROPS) for Earth Moving, Construction, Logging, and Industrial Vehicles.	(1)	55.9-88, 56.9-88, 57.9-88
Underwriters Laboratories, Inc.: UL-198.	UL Standard for Alternating Current Fuses	(1)	28.40
U.S. Corps of Engineers: EM-385-1-1—1967 edition.	Safety—General Safety Requirements	(1)	55.9-88, 56.9-88, 57.9-88, 77.403, 77.403a
U.S. Bureau of Reclamation: Standard, Section 9, Part 11 1971 edition.	Machinery and Mechanized Equipment, Safety and Health Regulations for Construction.	(1)	55.9-88, 56.9-88, 57.9-88

[1] This publication is given tentative approval for the period July 1, 1980, to August 1, 1980, pending completion of review under 1 CFR 51.13.

ADDRESS CODES

a. Mine Safety and Health Administration, 4015 Wilson Boulevard, Arlington, VA 22203.
b. Coal Mine Health and Safety District and Subdistrict Offices:
1. J. B. Shutack, District Manager, District 1, Penn Place, 20 North Pennsylvania Ave., Wilkes-Barre, PA 18701.
2. D. W. Huntley, District Manager, District 2, 4800 Forbes Ave., Pittsburgh, PA 15213.
3. J. D. Bree, Subdistrict Mgr., 4099 William Penn Hgwy., Monroeville, PA 15146.
4. W. R. Devett, Subdistrict Mgr., Sunray & Goucher, Johnstown, PA 15905.
5. R. Keaton, District Manager, District 3, 5012 Mountaineer Mall, Morgantown, WV 26505.
6. J. M. Krese, District Manager, District 4, P.O. Box 112, Mount Hope, WV 25880.
7. J. Rutherford, Subdistrict Mgr., P.O. Box 112, Mount Hope, WV 25880.
8. C. T. Spangler, Subdistrict Mgr., 110 Gott Rd., Princeton, WV 24740.
9. Fred Casteel, Subdistrict Mgr., P.O. Box 8 (475 N. Main St.—Freight), Madison, WV 25130.
10. R. G. Ross, District Manager, District 5, P.O. Box 560, Norton, VA 24273.
11. Bill W. Clemons, Subdistrict Mgr., P.O. Box 560 (546 Alexandria Ave.—Freight), Norton, VA 24273.
12. J. McManus, Subdistrict Mgr., Drawer AA, 2722 S. Front St., Richlands, VA 24641.
13 L. D. Phillips, District Manager, District 6, 218 High St., Pikeville, KY 41501.
14. J. Spicer, District Manager, District 7, Box 572, Barbourville, KY 40906.
15. T. R. Mark, Subdistrict Mgr., 616 Manchester St., Barbourville, KY 40906.
16. J. Weekly, Subdistrict Mgr., 228 W. Valley Ave., Homewood, AL 35209.
17. M. S. Childers, District Manager, District 8, P.O. Box 478, Vincennes, IN 47591.
18. C. Adams, Subdistrict Mgr., P.O. Box 370 (905 West Washington St.—Freight), Benton, IL 62812.
19. G. Svilar, Subdistrict Mgr., R.D. #6, Rt. 40 East, St. Clairsville, OH 43950.
20. J. W. Barton, District Manager, District 9, P.O. Box 25367, Denver, CO 80225.
21. William Bazo, Subdistrict Mgr., P.O. Box 25367, Denver, CO 80225.
22. J. Lamar Bishop, Subdistrict Mgr., 575 E. 1st South, Drawer J, Price, UT 84501.
23. W. M. Craft, District Manager, District 10, P.O. Box 473, Madisonville, KY 42431.
24. Donald Gabriella, Subdistrict Manager, 509 S. 3rd St., McAlester, OK 74501.
c. Metal and Nonmetal District and Subdistrict Offices:
1. Northeastern District Office, 4800 Forbes Avenue, Pittsburgh, PA 15213.
2. Southeastern District Office, 228 West Valley Avenue, Room 102, Birmingham, Alabama 35209.
3. Northcentral District Office, 228 Federal Building, Duluth, Minnesota 55802.
4. Southcentral District Office, 1100 Commerce Street, Room 4050, Dallas, Texas 75242.
5. Rocky Mountain District Office, Box 25367, Denver, Colorado 80225.
6. Western District Office, 620 Central Avenue, Bldg. 7, Alameda, California 94501.
7. Pittsburgh Subdistrict Office, 4800 Forbes Avenue, Pittsburgh, PA 15213.
8. Albany Subdistrict Office, P.O. Box 1894, U.S. Post Office and Courthouse, Albany, NY 12201.
9. Birmingham Subdistrict Office, 228 West Valley Avenue, Room L02, Birmingham, Alabama 35209.
10. Knoxville Subdistrict Office, 301 West Cumberland Avenue, Room 223, Knoxville, Tennessee 37902.
11. Duluth Subdistrict Office, 228 Federal Building, Duluth, Minnesota 55802.
12. Vincennes Subdistrict Office, 501 Busseron Street, Vincennes, Indiana 47591.
13. Dallas Subdistrict Office, 1100 Commerce Street, Room 4050, Dallas, Texas 75242.
14. Rolla Subdistrict Office, 900 Pine Street, Rolla, Missouri 65401.
15. Denver Subdistrict Office, Box 25367, Denver, Colorado 80225.
16. Salt Lake City Subdistrict Office, 2900 Main Street, Salt Lake City, Utah 84115.
17. Phoenix Subdistrict Office, Suite 900 South Tower, American Towers, 2721 N. Central Street, Phoenix, Arizona 85004.
18. Bellevue Subdistrict Office, 117 107th Avenue, N.E., Room 100, Bellevue, Washington 98004.
d. The American National Standards Institute, Inc., 1430 Broadway, New York, N.Y. 10018.
e. American Society of Mechanical Engineers, 345 East 47th Street, New York, N.Y. 10017.
f. National Board of Boiler and Pressure Vessel Inspectors, 1055 Crupper Avenue. Columbus, Ohio 43229.
g. Society of Automotive Engineers Inc., 400 Commonwealth Drive, Warrendale, Pennsylvania 15096.
h. State of California Office of Procurement, Documents Section, P.O. Box 20191, Sacramento, California 95820.
i. U.S. Government Printing Office, Washington, D.C. 20402.
j. Bureau of Reclamation, Division of safety Engineering and Research Center, Denver, Colorado 80225.
k. MSHA's Approval and Certification Center, Box 201B, Industrial Park Road, Triadelphia, W. Va. 26059.
l. Underwriters Laboratories, Inc., 161 Sixth Avenue, New York, N.Y. 10013.
m. The National Fire Protection Association, 60 Batterymarch St., Boston, Mass. 02110.
n. National Institute for Occupational Safety and Health, 5600 Fishers Lane, Rockville, Maryland 20852.
o. American Conference of Governmentl Industrial Hygienists, P.O. Box 1937, Cincinnati, OH 45201.

30 CFR Chapter VII.—*Office of Surface Mining, Department of the Interior*

American National Standards Institute, 1430 Broadway, New York, NY 10018.	
ANSI S1.4-1971—Specification for Sound Level Meters—1971	816.65; 817.65
American Society for Testing and Materials, 1916 Race Street, Philadelphia, Pa. 19103.	
D 388-77 Standard Specification for Classification of Coals by Rank—1977	700.5
American Society of Civil Engineers, 345 East 47th Street, New York, NY 10017.	
The Journal of the Irrigation and Drainage Division, American Society of Civil Engineers, "Crop Salt Tolerance—Current Assessment" by Maas and Hoffman—1977.	785.19
American Society of State and Transportation Officials, 4444 North Capitol Street, N.W., Suite 225, Washington, D.C. 20001.	
AASHTO T-99, Standard Specification for Transportation Materials and Methods of Sampling and Testing, Part II 1978	816.85; 817.85
Pennsylvania, State of. Materials available at each OSM Regional Office, District Office, and Field Office, and at:	
Office of Surface Mining, Central Office, U.S. Department of the Interior, South Interior Building, Washington, D.C. 20240.	
Pennsylvania statutes and regulations regarding performance standards for Anthracite coal mines—provisions in effect on August 3, 1977. These provisions are.	820.11

Pennsylvania Code—Title 25, Chapters 75, 77, 91, 92, 93, 94, 95, 97, 99, 100, 101, 102, 105, 121, 123, 124, 125, 127, 129, 131, 133, 135, 137, 139, 141, 143, 209, 210, 211, 241, 243 and 401.

(1) The Pennsylvania Anthracite Strip Mining and Conservation Act, June 27, 1947, P.L. 1095, as amended through August 3, 1977, 52 P.S. Section 681.1 *et seq.* (Purdons 1966, 1978 Supp.).

(2) The Pennsylvania Coal Refuse Disposal Control Act, September 24, 1968, P.L. 1040, No. 318, as amended through August 3, 1977, 52 P.S. Section 30.51 *et seq.* (Purdons 1966, 1978 Supp.).

(3) The Pennsylvania Surface Mining Conservation and Reclamation Act, May 31, 1945, P.L. 1198, as amended through August 3, 1977, 52 P.S. 1396.1 *et seq.* (Purdons 1966, 1978 Supp.).

(4) The Pennsylvania Anthracite Coal Mine Act of 1965, P.L. No 346, as amended through August 3, 1977, 52 P.S. Section 70.101 *et seq.* (Purdons 1966, 1978 Supp.).

(5) The Pennsylvania Clean Streams Law, as amended through August 3, 1977, 35 P.S. Section 691.1 *et seq.* (Purdons 1977).

(6) The Pennsylvania Gas Operations, Well-Drilling, Petroleum and Coal Mining Act, P.L. 756, Nov. 30, 1965, as amended through August 3, 1977, 52 P.S. Section 2101 *et seq.* (Purdons 1966, 1978 Supp.).

(7) Provisions regulating the discharge of coal, culm or refuse into streams under P.L. 640, June 27, 1913, as amended through August 3, 1977, 52 P.S. Section 631 *et seq.* (Purdons 1966, 1978 Supp.).

30 CFR Chapter VII.—*Office of Surface Mining, Department of the Interior—Continued*

(8) Regulation of coal stripping under P.L. 133, June 18, 1941, as amended through August 3, 1978, 52 P.S. Section 1471 *et seq.* (Purdons 1966, 1978 Supp.).
(9) Regulation of subsidence under P.L. 1196, May 22, 1921, as amended through August 3, 1977, 52 P.S. Section 661 *et seq.* (Purdons 1966, 1978 Supp.).
(10) Regulation of subsidence under P.L. 1538, Sept. 20, 1961, as amended through August 3, 1977, 52 P.S. Section *et seq.* (Purdons 1966, 1978 Supp.).
(11) The establishment of mine safety zones under P.L. 1994, Dec. 22, 1959, as amended through August 3, 1977, 52 P.S. Section 3101 *et seq.* (Purdons 1966, 1978 Supp.).
(12) Pennsylvania Air Pollution Control Act of January 8, 1960, P.L. as amended through August 3, 1977, 35 P.S. Section 4001 *et seq. 1(Purdons 1977) and,*.
(13) Pennsylvania Solid Waste Management Act, July 31, 1968, P.L. 788, as amended through August 3, 1977, 35 P.S. Section 691.1 *et seq.* (Purdons 1977).

U.S. Department of Agriculture, Soil Conservation Service, Superintendent of Documents, Government Printing Office, Washington, D.C. 20402.

Agricultural Handbook No. 18, "Soil Survey Manual"—1951	785.17
Agricultural Handbook No. 436, "Soil Taxonomy"—1975	785.17

U.S. Department of Agriculture, Soil Conservation Service, Mr. William Johnson, Deputy Administrator—Technical Services, Soil Conservation Service, U.S. Department of Agriculture, Washington, D.C. 20013.

Soil Conservation Service Practice Standard 378, "Ponds"—1977-1978	816.49
Technical Release No. 60, "Earth Dams and Reservoirs"—1976	816.49

33 CFR Chapter I.—*United States Coast Guard*

[All the materials listed on this table are also on file at: Coast Guard Headquarters, Room 4407, Trans Point Building, 2100 Second Street S.W., Washington, D.C 20593]

	33 CFR
Air Moving and Conditioning Association (AMCA), 30 West University Drive, Arlington Heights, IL 60004.	
210-74 Laboratory Methods of Testing Fans for Ratings, 1974	183.610
American Bureau of Shipping, 65 Broadway, New York, NY 10006.	
Rules for Building and Classing Single Point Moorings, 1975	150.405; 149.208
American National Standards Institute (ANSI), 1430 Broadway, New York, NY 10018.	
A12.1 Safety Requirements for Floor and Wall Openings, Railings and Toeboards, 1973	149.441
B16.5 Steel Pipe Flanges and Flange Fittings, 1977	154.500; 155.350; Part 155, Appendix A
B16.24 Brass or Bronze Pipe Flanges, 1971	154.500
B16.31 Nonferrous Pipe Flanges, 1971	154.500; 155.350
B31.3 Chemical Plant and Petroleum Refinery Piping, 1976 (with 1978 addenda B31.3a)	154.510
B31.4 Liquid Petroleum Transportation Piping Systems, 1974 (with 1979 addenda B31.4a)	149.205
Z41.1 Requirements for Men's Safety-toe Footwear, 1972 (Contained in 1976 edition)	150.509
Z87.1 Practice for Occupational and Educational Eye and Face Protection, 1979	149.517*; 150.509
* Replaces Z2.1, Fireman's Helmets.	
Z89.1 Safety Requirements for Industrial Head Protection, 1969	150.509
American Society for Testing and Materials (ASTM), 1916 Race Street, Philadelphia, PA 19103.	
E-11-70 Wire Cloth Sieves for Testing Purposes, 1977	159.125
D-471 Rubber Property—Effect of Liquids, 1979	183.114; 183.516; 183.607; 183.620
D-1621 Compressive Properties of Rigid Cellular Plastics, 1973	183.516
D-1622 Apparent Density of Rigid Cellular Plastics, 1963 (Reapproved, 1975)	183.516
D-2842 Water Absorption of Rigid Cellular Plastics, 1969 (Reapproved, 1975)	183.114
Illumination Engineering Society, 345 East 47th Street, New York, NY 10017.	
Lighting Handbook, 5th Edition, 1972, p. 3-36	149.703
Inter-governmental Maritime Consultative Organization, IMCO Sales, New York Nautical Instrument and Service Corp., 140 West Broadway, New York, NY 10013.	
Resolution A.378(x) as amended by Assembly Resolution A.428(xi) of November 15, 1979. (This section replaces IMCO Assembly Resolution A.284(viii) of November 20, 1973.).	150.305
International Chamber of Shipping, 30-32 St. Mary's Axe, London UK ED3A8ET.	
Clean Seas Guide for Oil Tankers, 1973	157.23
International Commission on Illumination (CIE).	
Standard Observer Diagram, 1931 (1964 Suppl.) (Above material reproduced in Lighting Handbook, 5th edition, 1972, on pp. 5-3 and 5-5, available from Illumination Engineering Society, 345 East 47th St., New York, NY 10017.).	149.727
National Fire Protection Association (NFPA), 470 Atlantic Ave., Boston, MA 02210.	
11A High Expansion Foam Systems, 1976	149.481
12 Carbon Dioxide Extinguishing Systems, 1977	149.481
12A Halogenated Fire Extinguishing Agent Systems—Halon 1301, 1977	149.481
13 Installation of Sprinkler Systems, 1978	149.481
70 National Electrical Code, 1979	183.435
72A Installation, Maintenance, and Use of Local Protective Signaling Systems, 1975	149.541
407 Fueling at Rooftop Heliports, 1975 Chapter 6	149.213
Naval Publications Forms Center, Customer Service—Code 1052, 5801 Tabor Avenue, Philadelphia, PA 19120.	
MILSPEC ZZ-H-451 Woven Hose, Rubber or Cambric-lined, with Couplings, 1978	149.469
MILSPEC MIL-C-25050, Color, Aeronautical Lights & Lighting Equipment, 1968 (with 1971 amendment).	67.30-5(a)
MILSPEC P-21929B Plastic Material, Cellular Polyurethane, Foam-in-Place, Rigid, 1970	183.505
Radio Technical Commission for Marine Services (RTCM), P.O. Box 19087, Washington, DC 20036.	
Paper 12-78/DO-100 Minimum Performance Standards (MPS), Loran C Receiving Equipment, 1977	164.41
Society of Automotive Engineers, Inc. (SAE), 400 Commonwealth Drive, Warrendale, PA 15096.	
J30 Fuel and Oil Hoses, 1977	183.505
J378 Marine Engine Wiring, 1978	183.430
J557 High Tension Ignition Cable, 1968	183.440
J1127 Battery Cable, 1975	183.430
J1128 Low Tension Primary Cable, 1975	183.430
Underwriters Laboratories (UL), 333 Pfingsten Road, Northbrook, IL 60062.	
19 Woven Jacketed, Rubber-lined Firehose, 1978 (with September, 1979 version.)	149.469
83 Standard for Thermoplastic Insulated Wires, 1979	183.435
1128 Marine Blowers, 1977	183.610
Underwriter's Laboratory, Inc., Class I, Group D, hazardous locations (Portable Lights)	149.539
United States Coast Guard, 2100 Second St., SW, Washington, DC 20593.	
Guidelines for Preparation of a Deepwater Ports Operations Manual, 1975	150.105

Continuing Incorporations by Reference, 33 CFR Part 183

Institute of Electrical and Electronic Engineers, Inc. (IEEE), 345 East 47th Street, New York, NY 10017.
45-1971* Cable Construction, 1970 ..... 183.435
*Note: Will be replaced by 45-1977 when necessary rulemaking complete.
Underwriters' Laboratories, Inc. (UL), 207 East Ohio Street, Chicago, IL 60611.
1114* Standard for Marine Use, Flexible Fuel Line Hose, 1976 ..... 183.505
*Note: Will be replaced by 1979 version when necessary rulemaking complete.

34 CFR Part 104.—*Office for Civil Rights, Department of Education*

American National Standards Institute, Inc., 1430 Broadway, New York, New York 10018.
ANSI A117.1—1961 ..... 34 CFR 104.23(c)
American National Standard Specifications for Making Buildings and Facilities Accessible to, and Usable by, the Physically Handicapped.

38 CFR Part 36.—*Veterans Administration*

HUD Minimum Property Standards 4900.1 ..... 38 CFR 36.4360a(b)

This material is available for public inspection at Veterans Administration field installations; at Information Center Room 1202, Department of Housing and Urban Development, 451 Seventh Street, S.W., Washington, D.C. 20410; and at HUD Regional, Area, and Insuring Offices.

39 CFR Chapter 1.—*United States Postal Service*

Domestic Mail Manual ..... 39 CFR 111.1
International Mail, Postal Service Publication 42 ..... 39 CFR 10.1
Postal Contracting Manual, Postal Service Publication 41 ..... 39 CFR 601.100

The source of these materials is the Postal Service, Washington, D.C. 20260.
For information on where the material is available see —
39 CFR 10.2 Availability of Postal Service Publication 42, International Mail.
39 CFR 111.2 Availability of the Domestic Mail Manual.
39 CFR 601.104 Availability of Postal Contracting Manual.

40 CFR Part 52.—*Environmental Protection Agency*

Environmental Protection Agency, Office of Air Quality Planning and Standards Research, Triangle Park, N.C. 27711.
OAQPS Guideline Series, "Guideline on Air Quality Modeling" (OAQPS 1.2-080), 1978 ..... 52.21(m)
Address code: a
Original State Implementation Plans and Amendments for the fifty States and the Territories of Guam, Puerto Rico, Virgin Island, and American Samoa. 52.02(d)
Address code: a, b, f

NOTE.—The Director of the Federal Register approved the State Implementation Plans for incorporation by reference on May 18, 1972. This initial approval has been extended until September 1, 1980, pending completion of review under 1 CFR 51.13.

40 CFR Part 53-80.—*Environmental Protection Agency*

Environmental Protection Agency, Office of Air Quality Planning and Standards Research, Triangle Park, N.C. 27711.
EPA Approved State Plans or Letters of Negative Declaration submitted to meet the requirements for Designated Facilities and Pollutants, 1980. 62.02(d)
Address code: a

40 CFR Parts 100-399.—*Environmental Protection Agency*

Academic Press, Inc., New York, New York.
Microbial Control of Insects and Mites, 1971 ..... 180.1011(a)(4)
Address code: e.
American Society for Testing and Materials, 1916 Race Street, Philadelphia, PA 19103.
ASTM D-2459, Gamma Spectrometry in Water, 1975 ..... 141.25(a)(6)
ASTM D-2907, Micro-quantities of Uranium in Water by Fluorometry, 1975 ..... 141.25(a)(7)
Department of Commerce, National Bureau of Standards, Washington, D.C. 20234.
Handbook 69, Permissible Body Burdens and Maximum Permissible Concentrations of Radionuclides in Air and in Water for Occupational Exposure, 1963. 141.16(b)
Address code: g.
Department of Energy, Environmental Measurements Laboratory, 376 Hudson Street, New York, New York 10014.
HASL Procedures Manual HASL-300, 1978 ..... 141.25(b)(2)
Address code: g.
Environmental Protection Agency, Monitoring and Support Laboratory, 25 West St. Clair, Cincinnati, Ohio 45268.
Interim Radiochemical Methodology for Drinking Water, Environmental Monitoring and Support Laboratory, EPA-600/4-75-008. 141.25(a)
Methods for Chlorinated Phenoxy Acid Herbicides in Industrial Effluents, MDQARL, 1973 ..... 141.24(f)
Methods for Organochlorine Pesticides in Industrial Effluents, MDQARL, 1973 ..... 141.24(e)
Williams and Wilkinson, Baltimore, Maryland.
Bergey's Manual of Determinative Bacteriology, 8th edition ..... 180.1011(a)(1)
Address code: e.

40 CFR Parts 400–424.—*Environmental Protection Agency*

American Society for Testing and Materials, 1916 Race Street, Philadelphia, PA 19103.
D2036–72, Standard Methods of Test for Cyanides ..... 402 11(b)
In Water, Method B. 1972 Annual Book of ASTM Standards, p. 553. ..... 415 91(c)
Address code: d.
Environmental Protection Agency.
Color, as measured by the modified tristimulus method, Development Document for Effluent Limitations. Guidelines and New Source Performance Standards for the Textile Mills. Point Source Category. Appendix A, June, 1974. EPA–440/1–74–022–a. 410 11(d)
Address code: c, d.
Purdue University.
Color, as measured by the modified tristimulus method. Proceedings of the 26th Industrial Waste Conference. This publication is no longer available. The same information is contained in the Development Document for Effluent Limitations Guidelines, cited elsewhere in this table.. 410 11(d)

40 CFR Parts 425–end.—*Environmental Protection Agency*

American Society for Testing and Materials, 1916 Race Street, Philadelphia, PA 19103.
D–93–77. Standard Test Methods for Flash Point by Pensky-Martens Closed Tester ..... 761 10(a)(3)(ii)(B)(5); 761 41(b)(8)(iii)
D–129–64. Standard Test Method for Sulfur in Petroleum Products (General Bomb Method) ..... 761 10(a)(3)(ii)(B)(5)
D–482–74. Standard Test Method for Ash from Petroleum Products ..... 761 10(a)(3)(ii)(B)(5)
D–524–76. Standard Test Method for Ramsbottom Carbon Residue of Petroleum Products ..... 761.10(a)(3)(ii)(B)(5)
D–808–63. Standard Test Method for Chlorine in New and Used Petroleum Products (Bomb Method). 761 10(a)(3)(ii)(B)(5)
D–923–75. Standard Test Methods of Sampling Electrical Insulating Liquids ..... 761.10(g)(1)(ii); 761 10(g)(2)(ii)
D–1266–70. Standard Test Method for Sulphur in Petroleum Products (Lamp Method) ..... 761 10(a)(3)(ii)(B)(5)
D–1796–68. Standard Test Method for Water and Sediment in Crude Oils and Fuel Oils by Centrifuge. 761.10(a)(3)(ii)(B)(5)
D–2158–65. Standard Test Method for Residues in Liquefied Petroleum (LP) Gases ..... 761.10(a)(3)(ii)(B)(5)
D–2709–68. Standard Test Method for Water and Sediment in Distillate Fuels by Centrifuge ..... 761.10(a)(3)(ii)(B)(5)
D–2784–70. Standard Test Method for Sulfur in Liquefied Petroleum Gases (Oxy-Hydrogen Burner or Lamp). 761 10(a)(3)(ii)(B)(5)
D–3178–73. Standard Test Methods for Carbon and Hydrogen in the Analysis Sample of Coal and Coke. 761.10(a)(3)(ii)(B)(5)
D–3278–73. Standard Test Methods for Flash Point of Liquids by Setaflash Closed Tester ..... 761 41(b)(8)(iii)
E–258–67. Standard Test Method for Total Nitrogen Inorganic Materials by Modified KJELDAHL Method. 761 10(a)(3)(ii)(B)(5)
Department of Energy, Environmental Measurements Laboratory, 376 Hudson Street, New York, NY 10014.
HASL Procedures Manual, HASL–300. 1973, page EU–03 ..... 440 82(g)
Address code: d, h, i.
National Council for Air and Stream Improvements, Inc., 260 Madison Avenue, New York, NY 10016.
Technical Bulletin 253, December, 1971 ..... 450.11(b)

ADDRESS CODES FOR 40 CFR

a. EPA Regional Offices: (as appropriate).
E.P.A. Region I, John F. Kennedy Federal Building, Boston, Massachusetts 02203.
E.P.A. Region II, 26 Federal Plaza, New York, New York 10007.
E.P.A. Region III, Curtis Building, 6th and Walnut Streets, Philadelphia, Pennsylvania 19106.
E.P.A. Region IV, 345 Courtland Street, NW, Atlanta, Georgia 30308.
E.P.A. Region V, 230 S. Dearborn Street, Chicago, Illinois 60604.
E.P.A. Region VI, First International Building, 1201 Elm Street, Dallas, Texas 75270.
E.P.A. Region VII, 324 E. 11th Street, Kansas City, Missouri 64106.
E.P.A. Region VIII, 1860 Lincoln Street, Denver, Colorado 80203.
E.P.A. Region IX, 215 Fremont Street, San Francisco, California 94105.
E.P.A. Region X, 1200 6th Avenue, Seattle, Washington, 98101.
b. Environmental Protection Agency Library, 401 M Street, S.W., Washington, D.C. 20460.
c. EPA Regional Libraries: (as appropriate).
Use the addresses for the Regional Offices, but send to the attention of the Library
d. Director, Office of Quality Review (WH552), Environmental Protection Agency, 401 M Street, S.W., Washington, D.C. 20460
e. Document Control Officer, Room E–447, Office of Pesticides and Toxic Substances, Environmental Protection Agency, 401 M Street, S.W., Washington, D.C. 20460
f. Environmental Protection Agency, 411 Chapel Hill Street, Durham, North Carolina 27701
g. Office of Drinking Water, Criteria and Standards Division, Environmental Protection Agency, 401 M Street, S.W., Washington, D.C. 20460
h. Health and Safety Research Division, Oak Ridge National Laboratory, Oak Ridge, TN 37830
i. National Technical Information Service, 5285 Port Royal Road, Springfield, VA 22151

41 CFR Part 60–741.—*Office of Federal Contract Compliance Programs, Department of Labor*

American Medical Association, 535 North Dearborn Street, Chicago, Ill. 60610.
Guides to the Evaluation of Permanent Impairment, 1971 ..... 41 CFR 60–741.7(d)

41 CFR Part 50–204.—Department of Labor

American Conference of Governmental Industrial Hygienists, A.C.G.I.H., P.O. Box 1937, Cincinnati, Ohio 45201
Threshold Limit Values of Airborne Contaminants for 1968 ..... 41 CFR 50–204.50(a)(1)
Address code: a.
Compressed Gas Association, Inc., New York, New York.
Pamphlet C–6–1968, Standards for Visual Inspection of Compressed Gas Cylinders ..... 41 CFR 50–204 65
Address code: a.
Pamphlet C–8–1962, Standard for Requalification of ICC–3HT Cylinders .....
Address code: a.
Pamphlet G–1–1966, Acetylene ..... 41 CFR 50–204 66(a)
Address code: a.
Pamphlet G–1.3–1959, Acetylene Transmission for Chemical Synthesis ..... 41 CFR 50–204.66(b)
Address code: a.
Pamphlet G–1.4–1966, Standard for Acetylene Cylinder Charging Plants ..... 41 CFR 50–204 66(c)
Address code: a.

41 CFR Part 50-204.—Department of Labor—Continued

Pamphlet G-4-1962, Oxygen	41 CFR 50-204.67
Address code: a.	
Compressed Gas Association, Inc., New York, New York.	
Pamphlet G-5.1-1961, Standard for Gaseous Hydrogen Systems at Consumer Sites	41 CFR 50-204.68
Address code: a.	
Pamphlet G-5.2-1966, Standard for Liquefied Hydrogen Systems at Consumer Sites	
Address code: a.	
Pamphlet G-8.1-1964, Standard for the Installation of Nitrous Oxide Systems at Consumer Sites	41 CFR 50-204.69
Address code: a.	
Pamphlet P-1-1965, Safe Handling of Compressed Gases	41 CFR 50-204.70
Address code: a.	
Pamphlet S-1.1-1963 and 1965, Addenda, Safety Release Device Standards—Cylinders for Compressed Gases.	41 CFR 50-204.71
Address code: a.	
Pamphlet S-1.2-1963, Safety Release Device Standards—Cargo and Portable Tanks for Compressed Gases.	
Address code: a.	
American Welding Society, Inc., 2501 N.W. 7th Street, Miami, Florida 33125.	
Pamphlet A-6.0-1965, Safe Practices for Welding and Cutting Containers That Have Held Combustibles.	41 CFR 50-204.72
Address code: a.	
National Committee on Uniform Traffic Laws and Ordinances, 1776 Massachusetts Ave., N.W., Washington, D.C. 20036.	
Chapters 10, 11, 12 and 14 of the Uniform Vehicle Code—1962 edition	41 CFR 50-204.75
Address code: a.	
U.S. Department of Agriculture, Agricultural Research Service (ARS) Science and Education Administration, National Agricultural Library, Photo Duplication Division, Beltsville, MD. 20705, Telephone (301) 344-3755.	
U.S. Department of Agriculture Respiratory Devices for Protection Against Certain Pesticides, ARS-33-76-2.	41 CFR 50-204.2(a)(4)
Address code: a.	

a. The National and Regional Offices of the Occupational Safety and Health Administration (OSHA) of the U.S. Department of Labor.

Boston Regional Office—Region I: Donald MacKenzie, Regional Administator, U.S. Department of Labor—OSHA, 16-18 North Street, 1 Dock Square Building, 4th Floor, Boston, Massachusetts 02109.

New York Regional Office—Region II: Nicholas DiArchangel, Acting Regional Administrator, U.S. Department of Labor—OSHA, 1515 Broadway (1 Astor Plaza)—Room 3445, New York, New York 10036.

Philadelphia Regional Office—Region III: David H. Rhone, Regional Administrator, U.S. Department of Labor—OSHA, Gateway Building—Suite 2100, 3535 Market Street, Philadelphia, Pennsylvania 19104.

Atlanta Regional Office—Region IV: Robert A. Wendell, Regional Administrator, U.S. Department of Labor—OSHA, 1375 Peachtree Street, N.E.—Suite 587, Atlanta, Georgia 30309.

Chicago Regional Office—Region V: Ronald McCann, Acting Regional Administrator, U.S. Department of Labor—OSHA, 32nd Floor—Room 3263, 230 South Dearborn Street, Chicago, Illinois 60604.

Dallas Regional Office—Region VI: Gilbert J. Saulter, Regional Administrator, U.S. Department of Labor—OSHA, 555 Griffin Square Bldg.—Room 602, Dallas, Texas 75202.

Kansas City Regional Office—Region VII: Vernon A. Strahm, Regional Administrator, U.S. Department of Labor—OSHA, 911 Walnut Street—Room 3000, Kansas City, Missouri 64106.

Denver Regional Office—Region VIII: Curtis Foster, Regional Administrator, U.S. Department of Labor—OSHA, Federal Building—Room 1554, 1961 Stout Street, Denver, Colorado 80294.

San Francisco Regional Office—Region IX: Gabriel Gillotti, Regional Administrator, U.S. Department of Labor—OSHA, 11349 Federal Building, 450 Golden Gate Avenue—P.O. Box 36017, San Francisco, California 94102.

Seattle Regional Office—Region X: James W. Lake, Regional Administrator, U.S. Department of Labor—OSHA, Federal Office Bldg., Room 6003, Seattle, Washington 98174.

41 CFR Part 101-7.—General Services Administration

Federal Travel Regulations, FPMR 101-7, May 1973	41 CFR 101-7.003(a)
GSA Bulletin FPMR A-40, April 30, 1973 (This bulletin is used to distribute to heads of agencies the information in and the changes to the Federal Travel Regulations).	
FPMR Temporary Regulation A-11, May 19, 1975 (This bulletin supplements GSA Bulletin FPMR A-40).	
Supplement 4, April 29, 1977.	
Supplement 5, March 8, 1978.	
Supplement 8, June 27, 1979.	
Supplement 9, April 21, 1980.	
Commuted Rate Schedule for Transportation of Household Goods, GSA Bulletin FPMR A-2, January 29, 1965.	41 CFR 101-7.003(b)
Supplement 1, May 4, 1965.	
Supplement 41, May 23, 1973.	
Supplement 85, October 25, 1979.	
Supplement 86, January 23, 1980.	
Supplement 87, January 31, 1980.	
Supplement 88, March 19, 1980.	

The source of these materials is the General Services Administration, Washington, D.C. 20405. For information on where the material is available see 41 CFR Subpart 105-60.3, Availability of Opinions, Orders, Policies, Interpretations, Manuals, and Instructions.

[FR Doc. 80-19378 Filed 6-27-80; 8:45 am]

BILLING CODE 1505-01-M

Monday
June 30, 1980

Part IV

Environmental Protection Agency

Improving Government Regulations; Agenda of Regulations

ENVIRONMENTAL PROTECTION AGENCY

40 CFR Ch. I

[FRL No. 1527-2]

Improving Government Regulations; Agenda of Regulations

AGENCY: Environmental Protection Agency.

ACTION: Agenda of regulations.

SUMMARY: The Agency periodically publishes an Agenda of Regulations that summarizes significant regulations under development. The purpose is to keep interested parties informed of the progress of these regulations. The Agenda includes new regulations, existing regulations that the Agency is reviewing or revising, and also certain non-regulatory actions which the Agency believes are important enough to be listed. Two appendices include (1) the expanded descriptions of selected major regulations which appeared in the Regulatory Council's *Calendar of Federal Regulations* and (2) the results of EPA's screening of existing regulations for possible review or revision.

FOR FURTHER INFORMATION CONTACT. For information on a regulation in the Agenda, please contact the person listed next to the regulation.

We have tried to change this Agenda in response to comments on our previous Agenda. If you have further suggestions for improving this publication, or need general information about the Agenda, please call or write to David Sahr, Regulation Management Staff, Environmental Protection Agency, PM-223, Washington, D.C. 20460 (202) 287-0776.

If you want to be on the mailing list for the Agenda of Regulations, please call or write to Penelope Parker, Regulation Management Staff, Enviornmental Protection Agnecy, PM-223, Washington, D.C. 20460, (202) 287-0783.

SUPPLEMENTARY INFORMATION:

Background

On March 23, 1978, President Carter signed Executive Order 12044, *Improving Government Regulations,* which establishes certain procedures that executive agencies must follow in developing their regulations. One of these procedures is publishing an agenda of the significant regulations that the agency has under development. EPA published its most recent Agenda of Regulations on March 14, 1980, 45 FR 16832. EPA will publish its next Agenda in December 1980, and thereafter on a semi-annual basis.

Regulations Covered in the Agenda

We have attempted to inlcude all significant regulations which the Agency is currently developing. Regulations enter this development process when the Assistant Administrator for a program office, for instance, our Office of Air, Noise and Radiation, sends a Start Action Notice (SAN) to senior management. This notice informs the rest of the Agency that the program office is starting work on a new regulation. If the new regulation is classified significant, it will appear in the Agenda.

The Agenda inlcudes all regulations which are scheduled for publication as a proposal or final rule within the coming year. Where possible, it also includes regulations with scheduled actions that are more than a year away. In addition, it includes actions which are *not* regulations, but which nontheless represent major policy decisions, such as policy statements or Agency guidelines.

Regulations that appeared in our last Agenda but that are no longer under consideration (usually because they have been published as final regulations) appear in a separate section at the end of the Agenda. They will be deleted from future Agendas.

A total of 207 regulation entries appear in this Agenda. An additional ten entries appear in the section of regulations to be deleted from the Agenda. Approximately 40% of the entries in this Agenda are for changes to existing regulations rather than for completely new regulations.

Agency Classification of Regulations

EPA's system for classifying regulations is described in detail in *Improving Environmental Regulations; Final Report Implementing Executive Order 12044, 44 FR 30988 (May 29, 1979). The Agency assumes that all regulations are significant, unless they are:*

(1) Administrative or procedureal in nature;

(2) Minor amendements to existing regulations;

(3) Regulatory actions resulting from highly specific Congressional mandates that leave EPA no discretion to evaluate alternatives (e.g., deadline changes);

(4) EPA actions or regulations developed by State and local governments (such as State Implementation Plans); or

(5) Pesticide tolerances and regulations to exempt pesticides from the provisions of the Federal Insecticide, Fungicide, and Rodenticide Act (FIFRA).

The Agency further divides significant regulations into routine and major regulations. Major regulations are those that are likely to have substantial impact in any of several areas, including health, ecology, the economy, particular communities or regions, and the activities of other Federal and State agencies. Major regulations receive extra attention from the Agency's senior management. Of the regulations in this Agenda, 50 are major and 144 are routine. Some significant regulations (three in all) have been designated unclassified. We will change them to major or routine when they have advanced further in the regulation development process.

Important policy statements and other non-regulatory actions which appear in the Agenda are not classified as either major or routine. Instead, they are classified according to the type of action involved. The three classifications for these kinds of actions are: (1) Policy Statements, (2) Guidance and (3) Listings. Included in these three categories are the following actions:

- Listing of Coke Oven Emissions as a Hazardous Air Pollutant under Section 112 of the Clean Air Act
- Policy and Procedures for Regulating Airborne Carcinogens
- State Enforcement of Pesticide Violations—Policy Statement
- Guidance for Occupational Radiation Exposure
- Transuranic Elements Guidance
- Environmental Criteria for Disposal of Radioactive Wastes
- Protective Action Guidance for Accidental Airborne Releases of Radioactivity
- Radiofrequency Radiation Guidance
- Quality Criteria for Water
- Policy on Public Participation

Explanation of Information in the Regulatory Agenda

There are four columns of information for each entry in the Agenda.

The *first* column contains the title, the Start Action Notice (SAN) number, and the docket number of the regulation. The Agency assigns the SAN number to a new significant regulation when the program office begins work on it. The SAN number prevents confusion if the title of a regulation changes, or if there are other similarly-titled regulations. For those regulations which have them, the docket number is useful in getting access to files on the regulation that are open to the public. If a bullet "•" precedes the title of the regulation, additional information on that regulation appears in Appendix I, which consists of the descriptions of selected

major regulations prepared for the *Calendar of Federal Regulations* published by the Regulatory Council in the Federal Register.

The *second* column contains most of the descriptive information on the regulation. It includes entries under the following categories:

Description: This entry describes the problem addressed by the regulation and explains the need for the regulation.

CFR Changes: This entry identifies the part or subpart where the final regulation will appear, in volume 40 of the Code of Federal Regulations (CFR). In some cases, it also specifies how the regulation will change an already existing subpart (revising the subpart, adding to it, or deleting from it.)

Statutory Authority: This entry lists the sections of the statutes that authorize the regulation. It also lists the sections from the United States Code where the statutes are codified. (See the section below entitled "Summary of Contents" for abbreviations of the titles of the statutes.)

Classification: This entry identifies significant regulations as "major" or "routine". Non-regulatory actions are classified as policy statements, guidance, or listings. (For explanation of these terms see the section above on "Agency Classification of Regulations."

Analysis: EPA prepares a standard economic analysis for *all* significant regulations. This entry indicates whether the Agency plans to perform any additional special analyses, *i.e.* a Regulatory analysis, an Urban and Community Impact Analysis (UCIA), or an Environmental Impact Statement (EIS). We have dropped this category for those regulations for which we will not prepare any of the three special analyses.

The *third* column lists the person at EPA to contact for additional information on the regulation.

The *fourth* column lists documents published in the Federal Register in connection with the regulation, and provides the timetable for future actions. Published documents include: (i) The Advance Notice of Proposed Rulemaking, which describes the purpose of the proposed action and the issues and alternatives which the Agency will consider; (ii) The Notice of Proposed Rulemaking, which is the regulation which the Agency proposes to publish; and (iii) The Final Rule. In many cases, the timetable for future actions is only tentative.

The Agenda uses the following abbreviations:

Advance Notice of Proposed Rulemaking.....ANPRM
Notice of Proposed Rulemaking.....NPRM
Notice of Reproposal.....RPRM
Interim Final Rule.....IFR
Final Rule.....FR

Organization of the Agenda

The Agenda lists regulations by the titles we give to our major pollution control program areas, e.g., air, water quality, solid wastes. Within each program area the regulations are ordered numerically by section number of the authorizing legislation. For example, all air regulations under Section 109 of the Clean Air Act will appear before those under Section 111. The program areas and their authorizing legislative acts appear in the "Summary of Contents" below.

Summary of Contents

Program area	Legislation
Air	The Clean Air Act (CAA).
	The Energy Policy and Conservation Act (EPCA).
Drinking water	The Safe Drinking Water Act (SDWA).
Noise	The Noise Control Act (NCA).
Pesticides	The Federal Insecticide, Fungicide, and Rodenticide Act (FIFRA).
	The Food, Drug and Cosmetics Act (FDCA).
Radiation	The Atomic Energy Act (AEA).
	The Uranium Mill Tailings Radiation Control Act (UMTRCA).
Solid Waste	The Resource Conservation and Recovery Act (RCRA).
Toxic substances.	The Toxic Substances Control Act (TSCA).
Water	The Clean Water Act (CWA).
	The Marine Protection, Research, and Sanctuaries Act (MPRSA)
General	The National Historic Preservation Act and Executive Order 12114.

Regulations Deleted From the Previous Agenda

After listing all significant regulations currently under consideration, the Agenda lists all the regulations that appeared in the last Agenda but that are now no longer under consideration. These regulations will not appear in our next Agenda.

The information given on these regulations is less detailed than for those still under consideration. Generally, it includes the date and Federal Register citation, if any, of the last action on the regulation, and explains why the Agency is deleting the regulation from the Agenda. The explanation is usally that the regulation has been completed.

Reviews of Existing Regulations

The Agency reviews many of its regulations under statutory or judicial mandate. A large proportion of the regulation entries in this Agenda are actions to satisfy these requirements. In addition, EPA is conducting a comprehensive review of existing regulations not subject to statutory or judicial mandate, as required under Executive Order 12044. These reviews comprise the Agency's Regulation Screening Project.

This Agenda includes significant regulations which EPA has begun to revise as a result of the Screening Project. Future Agendas will include other regulations which the Agency decides to revise as a result of its Screening Project. EPA's normal requirements under Executive Order 12044 will apply to these regulations.

Appendix II consists of a list of regulations we have screened, as well as the recommendations which resulted from the screening.

Henry E. Beal,

Director, Standards and Regulations Division.

BILLING CODE 6560-01-M

SIGNIFICANT EPA REGULATIONS UNDER CONSIDERATION

Title	Summary	Contact	Timetable
	AIR		
The goal of the Clean Air Act is to protect the public health and welfare from the harmful effects of air pollution. To achieve the goal, EPA develops national ambient air quality standards and the States adopt State Implementation Plans (SIP) to meet these standards. States are also required, pursuant to EPA regulations, to develop plans to prevent significant deterioration of air quality in areas where the ambient standards have been attained and to enhance visibility. EPA also develops New Source Performance Standards (NSPS) under CAA 111 and National Emission Standards for Hazardous Air Pollutants (NESHAPS) under CAA 112 to control emissions from stationary sources of air pollution.			
We have already or are now developing the items below under the authority of Sections 108 and 109 of the Clean Air Act (CAA), which directs the Administrator to establish National Ambient Air Quality Standards (NAAQS). To write a NAAQS for a pollutant, we first prepare a criteria document, which contains the latest scientific knowledge on the kind and extent of public health and welfare problems caused by the pollutants in the air. If we revise the criteria document, we may find it necessary to change the NAAQS. A National Primary Ambient Air Quality Standard defines the maximum amount of an air pollutant which in the judgment of the Administrator provides an adequate margin of safety to protect the public health. A National Secondary Ambient Air Quality Standard defines levels of air quality which the Administrator judges necessary to protect the public welfare from any known or anticipated adverse effects of a pollutant.			
• *Review of NAAQS for Carbon Monoxide* (SAN No. 1001)	A. Description: This rule reviews the health basis for control of this pollutant. This task involves preparation of an updated criteria document and an analysis of whether or not EPA should revise the standard. B. Classification: Major. C. Statutory Authority: CAA 108; 42 USC 7408. D. CFR Change: Revision to 40 CFR 50. E. Analysis: EIS, UCIA, REG. ANALYSIS.	Joe Padgett EPA (MD-12) Research Triangle Park, NC 27711 FTS: 8-629-5204 Comm: 919-541-5204	NPRM: Summer 1980 FR: Fall 1980
• *Review of NAAQS for Nitrogen Dioxide* (SAN No. 1004)	A. Description: The NAAQS for nitrogen dioxide is undergoing review. Under the CAA amendments, the decision of whether or not to revise the standard must address both the short-term and long-term effects of nitrogen dioxide and other nitrogen species in the air, particularly nitrates and nitric acid aerosol. B. Classification: Major. C. Statutory Authority: CAA 108; 42 USC 7408. D. CFR Change; 40 CFR 50. E. Analysis: EIS, UCIA, REG. ANALYSIS.	Joe Padgett EPA (MD-12) Research Triangle Park, NC 27711 FTS: 8-629-5204 Comm: 919-541-5204	NPRM: Spring 1980 FR: Fall 1981
Incorporation of Lead into Part 58 Air Monitoring Regulations (SAN No. 1500 Docket No. OAQPS 77-1)	A. Description: This rule will set forth monitoring regulations reflecting the lead national ambient air quality standard. B. Classification: Routine. C. Statutory Authority: CAA 108, 110; 42 USC 7408, 7410. D. CFR Changes: Revision to 40 CFR 58. E. Analysis: EIS.	Bob Neligan EPA (MD-14) Research Triangle Park, NC 27711 FTS: 8-629-5447 Comm: 919-541-5447	NPRM: 7/80 FR: 3/81
• *Review of NAAQS for Sulfur Dioxide* (SAN No. 1002)	A. Description: A review of the health basis for control of this pollutant will require preparation of an updated criteria document and an analysis of whether or not EPA should revise the standard. B. Classification: Major. C. Statutory Authority: CAA 109; 42 USC 7409. D. CFR Change: Revision to 40 CFR 50. E. Analysis: EIS, UCIA, REG. ANALYSIS.	Joe Padgett EPA (MD-12) Research Triangle Park, NC 27711 FTS: 8-629-5204 Comm: 919-541-5204	NPRM: Fall 1980 FR: Spring 1981
• *Review of NAAQS for Particulate Matter* (SAN No. 1003)	A. Description: A review of the health basis for control of this pollutant will require preparation of an updated criteria document and an analysis of whether or not EPA should revise the standard. B. Classification: Major. C. Statutory Authority: CAA 108; 42 USC 7409 D. CFR Change: Revision to 40 CFR 50. E. Analysis: EIS, UCIA, REG. ANALYSIS.	Joe Padgett EPA (MD-12) Research Triangle Park, NC 27711 FTS: 8-629-5204 Comm: 919-541-5204	NPRM: Fall 1980 FR: Spring 1981

SIGNIFICANT EPA REGULATIONS UNDER CONSIDERATION—Continued

Title	Summary	Contact	Timetable
	AIR—Continued		
Restructure CFR Parts 51, 52 (SAN No. 1503)	A. Description: This rule will update and make consistent Part 51 and restructure Part 52 on State Implementation Plans. No substantive changes will result. This change will streamline the rules and improve the language and organization. B. Classification: Routine. C. Statutory Authority: CAA 110; 42 USC 7410. D. CFR Change: Revision to 40 CFR 51, 52.	Richard Rhoads EPA (MD-12) Research Triangle Park, NC 27711 FTS: 8-629-5251 Comm 919-541-5251	NPRM: 11/80 FR: 7/81
Continuous Monitoring (SAN No. 1613)	A. Description: This regulation revises performance specifications for continuous monitors applied to air pollution sources, including monitors for opacity, sulfur dioxide, nitrogen oxide, carbon monoxide and ozone. B. Classification: Routine. C. Statutory Authority: CAA 110(a); 42 USC 7410(a). D. CFR Change: Revision to 40 CFR 60	Roger Sagehara EPA (MD-13) Research Triangle Park, NC 27711 FTS: 8-629-2237 Comm 919-541-2237	NPRM: 44FR58602 (10/10/79) FR: 7/80
Minimum Requirements for Stationary Air Operating Permits (SAN No. 1520)	A. Description: This rule will specify minimum requirements for State operating permit programs. B. Classification: Routine. C. Statutory Authority: CAA 110(a)(2)(D); 42 USC 7410 (a)(2)(D). D. CFR Change: 40 CFR 51.	Robert L. King EPA (EN-341) Washington, DC 20460 FTS: 8-755-2582 Comm: 202-755-2582	NPRM: 4/81 FR: 1/82
EPA is developing performance standards to control emissions from the following industries under Section 111(b) of the CAA. This section requires that the Administrator develop and periodically update New Source Performance Standards (NSPS) for stationary sources which significantly contribute to air pollution. The NSPS are based on the best systems demonstrated to reduce emissions continually, taking into account costs and energy requirements. The standards will apply to both new sources and existing sources which are modified after approval of the regulation.			
NSPS: Glass Manufacturing (SAN No. 1007, Docket No. OAQPS 79-2)	A. Description: This regulation addresses the problem of particulate emissions from new glass manufacturing furnaces. The Governor of New Jersey requested that EPA develop national standards. B. Classification: Routine. C. Statutory Authority: CAA 111; 42 USC 7411 D. CFR Change: 40 CFR 60. E. Analysis: EIS.	Don Goodwin EPA (MD-13) Research Triangle Park, NC 27711 FTS: 8-629-5271 Comm: 919-541-5271	NPRM: 44FR34840 (6/15/79) FR: 7/80
NSPS: Internal Combustion Engines (SAN No. 1008, Docket No. OAQPS 79-5)	A. Description: These regulations will require the application of best demonstrated technology to control nitrogen oxide emissions from stationary internal combustion engines. B. Classification: Routine. C. Statutory Authority: CAA 111, 42 USC 7411. D. CFR Change: 40 CFR 60. E. Analysis: EIS.	Don Goodwin EPA (MD-13) Research Triangle Park, NC 27711 FTS: 8-629-5271 Comm: 919-541-5271	NPRM: 44FR43173 (7/23/79) FR: 9/80
NSPS: Non-Metallic Mineral Operations (SAN No. 1009)	A. Description: This regulation will control particulate emissions from quarrying operations and related facilities. B. Classification: Routine. C. Statutory Authority: CAA 111, 42 USC 7411. D. CFR Change: 40 CFR 60. E. Analysis: EIS.	Don Goodwin EPA (MD-13) Research Triangle Park, NC 27711 FTS 8-629-5271 Comm: 919-541-5271	NPRM: 6/80 FR: 4/81
NSPS: Organic Solvent Cleaners (SAN No. 1010, Docket No. OAQPS 78-12)	A. Description: This rule will control evaporative emissions from metal cleaning and degreasing operations. It will also require States to act under section 111(d) to control some specific solvent emissions from existing sources. B. Classification: Routine. C. Statutory Authority: CAA 111, 42 USC 7411 D. CFR Change: 40 CFR 60. E. Analysis: EIS.	Don Goodwin EPA (MD-13) Research Triangle Park, NC 27711 FTS 8-629-5271 Comm 919-541-5271	NPRM: 6/80 FR: 1/81

SIGNIFICANT EPA REGULATIONS UNDER CONSIDERATION—Continued

Title	Summary	Contact	Timetable
	AIR—Continued		
NSPS: Industrial Surface Coating: Automobile Assembly Plants (SAN No. 1111)	A. Description: This regulation will control volatile organic compound emissions from coating operations in the auto and light-truck industries. B. Classification: Routine. C. Statutory Authority: CAA 111; 42 USC 7411. D. CFR Change: 40 CFR 60. E. Analysis: EIS.	Don Goodwin EPA (MD-13) Research Triangle Park, NC 27711 FTS: 8-629-5271 Comm: 919-541-5271	NPRM: 44FR57792 (10/5/79) FR: 9/80
NSPS: Synthetic Organic Chemical Manufacturing—Fugitive Emissions (SAN No. 1112)	A. Description: This rule will control fugitive emissions from the manufacture of organic chemicals. There will be other synthetic organic chemical manufacturing standards. The first process standard is scheduled for proposal in January '81. B. Classification: Routine. C. Statutory Authority: CAA 111; 42 USC 7411. D. CFR Change: 40 CFR 60. E. Analysis: EIS.	Don Goodwin EPA (MD-13) Research Triangle Park, NC 27711 FTS: 8-629-5271 Comm: 919-541-5271	NPRM: 9/80 FR: 7/81
NSPS: Industrial Surface Coating: Cans (SAN No. 1113)	A. Description: This regulation will establish emission standards for volatile organic emissions from can-coating operations. B. Classification: Routine. C. Statutory Authority: CAA 111; 42 USC 7411. D. CFR Change: 40 CFR 60. E. Analysis: EIS.	Don Goodwin EPA (MD-13) Research Triangle Park, NC 27711 FTS: 8-629-5271 Comm: 919-541-5271	NPRM: 9/80 FR: 7/81
NSPS: Industrial Surface Coating: Pressure Sensitive Tapes and Labels (SAN No. 1114, Docket No. A-79-38)	A. Description: This regulation will establish emission standards for volatile organic emissions from pressure-sensitive tapes and labels coating operations. B. Classification: Routine. C. Statutory Authority: CAA 111; 42 USC 7411. D. CFR Change: 40 CFR 60. E. Analysis: EIS.	Don Goodwin EPA (MD-13) Research Triangle Park, NC 27711 FTS: 8-629-5271 Comm: 919-541-5271	NPRM: 6/80 FR: 5/81
NSPS: Industrial Surface Coating. Metal Furniture (SAN No. 1115)	A. Description: This regulation will establish emission standards for volatile organic emissions from metal furniture operations. B. Classification: Routine. C. Statutory Authority: CAA 111; 42 USC 7411. D. CFR Change: 40 CFR 60. E. Analysis: EIS.	Don Goodwin EPA (MD-13) Research Triangle Park, NC 27711 FTS: 8-629-5271 Comm: 919-541-5271	NPRM: 6/80 FR: 4/81
NSPS: Industrial Suface Coating: Metal Coils (SAN No. 1598)	A. Description: This rule will control emissions of volatile organic compounds from metal coil industrial surface coating operations. B. Classification: Routine. C. Statutory Authority: CAA 111; 42 USC 7411. D. CFR Change: 40 CFR 60. E. Analysis: EIS.	Don Goodwin EPA (MD-13) Research Triangle Park, NC 27711 FTS: 8-629-5271 Comm: 919-541-5271	NPRM: 9/80 FR: 7/81
NSPS: Industrial Surface Coating: Large Appliances (SAN No. 1599)	A. Description: This regulation will control volatile organic compounds emissions from industrial surface coating operations for large appliances. B. Classification: Routine. C. Statutory Authority: CAA 111; 42 USC 7411. D. CFR Change: 40 CFR 60. E. Analysis: EIS.	Don Goodwin EPA (MD-13) Research Triangle Park, NC 27711 FTS: 8-629-5271 Comm: 919-541-5271	NPRM: 9/80 FR: 7/81
NSPS: Lead-Acid Battery Manufacture (SAN No. 1116, Docket No. OAQPS 79-1)	A. Description: This regulation will establish standards for lead emissions from lead-acid battery manufacturing facilities. B. Classification: Routine. C. Statutory Authority: CAA 111; 42 USC 7411. D. CFR Change: 40 CFR 60. E. Analysis: EIS.	Don Goodwin EPA (MD-13) Research Triangle Park, NC 27711 FTS: 8-629-5271 Comm: 919-541-5271	NPRM: 45FR2790 (1/14/80) FR: 11/80

SIGNIFICANT EPA REGULATIONS UNDER CONSIDERATION—Continued

Title	Summary	Contact	Timetable
	AIR—Continued		
NSPS: Phosphate Rock Operations (SAN No. 1118, Docket No. OAQPS 79-6)	A. Description: This regulation will control the emission of particulate matter from phosphate rock processes. B. Classification: Routine. C. Statutory Authority: CAA 111; 42 USC 7411 D. CFR Change: 40 CFR 60. E. Analysis: EIS.	Don Goodwin EPA (MD-13) Research Triangle Park, NC 27711 FTS 8-629-5271 Comm 919-541-5271	NPRM: 44FR62914 (11/1/79) FR: 10/80
NSPS: Percloroethylene Dry Cleaning (SAN No. 1119, Docket No. A-79-30)	A. Description: This regulation will control hydrocarbon emissions from dry cleaning establishments. B. Classification: Routine. C. Statutory Authority: CAA 111, 42 USC 7411. D. CFR Change: 40 CFR 60. E. Analysis: EIS.	Don Goodwin EPA (MD-13) Research Triangle Park, NC 27711 FTS 8-629-5271 Comm 919-541-5271	NPRM: 6/80 FR: 4/81
NSPS: Publication Rotogravure Printing (SAN No. 1120)	A. Description: This regulation will control emissions of volatile organic compounds from large-scale rotogravure printing operations. B. Classification: Routine. C. Statutory Authority: CAA 111; 42 USC 7411. D. CFR Change: 40 CFR 60. E. Analysis: EIS.	Don Goodwin EPA (MD-13) Research Triangle Park, NC 27711 FTS 8-629-5271 Comm 919-541-5271	NPRM: 7/80 FR: 5/81
• *NSPS: Industrial Boilers* (SAN No. 1586)	A. Description: This regulation will establish standards of performance for industrial boilers. EPA will base the emission standards upon the best system—given costs—of continuous emission reduction. B. Classification: Major. C. Statutory Authority: CAA 111; 42 USC 7411. D. CFR Change: 40 CFR 60. E. Analysis: EIS, REG. ANALYSIS.	Don Goodwin EPA (MD-13) Research Triangle Park, NC 27711 FTS 8-629-5271 Comm 919-541-5271	NPRM: 3/81 FR: 3/82
NSPS: Ammonium Sulfate Production (San No. 1587, Docket No. A-79-31)	A. Description: This rule will control particulate emissions from the production of ammonium sulfate. B. Classification: Routine. C. Statutory Authority: CAA 111; 42 USC 7411. D. CFR Change: 40 CFR 60. E. Analysis: EIS.	Don Goodwin EPA (MD-13) Research Triangle Park, NC 27711 FTS 8-629-5271 Comm 919-541-5271	NPRM: 45FR7758 (2/4/80) FR: 11/80
NSPS: Ammonium Nitrate Fertilizer Production (SAN No. 1588)	A. Description: This rule will control particulate emissions from production of ammonium nitrate fertilizer. B. Classification. Routine. C. Statutory Authority: CAA 111; 42 USC 7411 D. CFR Change: 40 CFR 60. E. Analysis: EIS.	Don Goodwin EPA (MD-13) Research Triangle Park, NC 27711 FTS 8-629-5271 Comm 919-541-5271	NPRM: 4/81 FR: 3/82
NSPS: Bulk Gasoline Terminals (SAN No. 1589, Docket No. OAQPS 78-2)	A. Description: This rule will control volatile organic compound emissions from gasoline distribution operations. B. Classification: Routine. C. Statutory Authority. CAA 111; 42 USC 7411 D. CFR Change: 40 CFR 60. E. Analysis: EIS.	Don Goodwin EPA (MD-13) Research Triangle Park, NC 27711 FTS 8-629-5271 Comm 919-541-5271	NPRM: 10/80 FR: 9/81
NSPS: Sodium Carbonate Manufacture (SAN No. 1590)	A. Description: This regulation will control particulate emissions from production of sodium carbonate. B. Classification: Routine. C. Statutory Authority: CAA 111, 42 USC 7411. D. CFR Change: 40 CFR 60. E. Analysis: EIS.	Don Goodwin EPA (MD-13) Research Triangle Park, NC 27711 FTS 8-629-5271 Comm. 919-541-5271	NPRM: 8/80 FR: 4/81

SIGNIFICANT EPA REGULATIONS UNDER CONSIDERATION—Continued

Title	Summary	Contact	Timetable
	AIR—Continued		
NSPS: Asphalt Roofing Manufacture (SAN No. 1591, Docket No. A-79-39)	A. Description: This rule will control particulate emissions from the manufacture of asphalt roofing. B. Classification: Routine. C. Statutory Authority: CAA 111; 42 USC 7411. D. CFR Change: 40 CFR 60. E. Analysis: EIS.	Don Goodwin EPA (MD-13) Research Triangle Park, NC 27711 FTS: 8-629-5271 Comm: 919-541-5271	NPRM: 6/80 FR: 5/81
NSPS: Urea Production (SAN No. 1592)	A. Description: This rule will control particulate emissions from the production of urea. B. Classification: Routine. C. Statutory Authority: CAA 111; 42 USC 7411 D. CFR Change: 40 CFR 60. E. Analysis: EIS.	Don Goodwin EPA (MD-13) Research Triangle Park, NC 27711 FTS: 8-629-5271 Comm: 919-541-5271	NPRM: 4/81 FR: 3/82
NSPS: Non-Fossil Fuel Fired Boilers (SAN No. 1614, Docket No. A-79-22)	A. Description: This standard will control particulate emissions from combustion of wood, municipal solid waste, refuse derived fuels and bagasse. This standard will also control particulate emissions of the above when combined with fossil fuels. B. Classification: Routine. C. Statutory Authority: CAA 111; 42 USC 7411. D. CFR Changes: 40 CFR 60.	Don R. Goodwin EPA (MD-13) Research Triangle Park, NC 27711 FTS: 8-629-5271 Comm: 919-541-5271	NPRM 1/81 FR: 11/81
NSPS: Rubber Products Industry – Tire Manufacturing (SAN No. 1615, Docket No. A-80-9)	A. Description: This standard will control VOC (volatile organic compound) emissions from solvent application during undertread/sidewall cementing, tread end cementing, bead cementing and green tire coating in rubber tire manufacturing plants. B. Classification: Routine. C. Statutory Authority: CAA 111; 42 USC 7411. D. CFR Changes: 40 CFR 60.	Don R. Goodwin EPA (MD-13) Research Triangle Park, NC 27711 FTS: 8-629-5271 Comm: 919-541-5271	NPRM: 7/81 FR: 6/82
NSPS: Beverage Can Surface Coating Industry (SAN No. 1616, Docket No. A-80-4)	A. Description: These standards will limit VOC (volatile organic compounds) emission from new, modified, and reconstructed two and three piece beverage can and beverage can end surface coating facilities. The standards will cover base coat, varnish, inside coat, and end-seal operations. B. Classification: Routine. C. Statutory Authority: CAA 111; 42 USC 7411. D. CFR Changes: 40 CFR 60.	Don R. Goodwin EPA (MD-13) Research Triangle Park, NC 27711 FTS: 8-629-5271 Comm: 919-541-5271	NPRM: 9/80 FR: 7.81
NSPS: Electric Arc Furnaces in Ferrous Foundries (SAN No. 1617, Docket No. A-80-3)	A. Description: This standard will control particulate emissions from electric arc furnaces in ferrous foundries during the melting phase of the furnace operation. B. Classification: Routine. C. Statutory Authority: CAA 111; 42 USC 7411. D. CFR Change: 40 CFR 60.	Don R. Goodwin EPA (MD-13) Research Triangle Park, NC 27711 FTS: 8-629-5271 Comm: 919-541-5271	NPRM: 9/80 FR: 7/81

EPA is developing emission standards for hazardous air pollutants under section 112 of the CAA. This section requires that the Administrator develop National Emission Standards for Hazardous Air Pollutants (NESHAPS) for emissions that cause or contribute to air pollution which results in an increase in mortality or in serious or incapacitating illness. The standards will apply to both new sources and existing sources.

The 1977 amendments extended the definition of air pollution to include radioactive substances. The Agency has listed radionuclides as a hazardous air pollutant and is developing regulations for radionuclides under section 112.

NESHAPS: Benzene Fugitive Emissions (SAN No. 1126, Docket No. A-79-27)	A. Description: This regulation would limit benzene emissions from fugitive emission sources in benzene service in petroleum refining and organic chemical manufacturing industries. The standards would allow no detectable emissions due to leaks from safety release valves and product accumulator vessels, would require a regular detection and repair program, and certain equipment for pipeline valves, pumps, compressors, sampling connections and open-ended valves. Former title was Petroleum Refinery/Chemical Plant. B. Classification: Major. C. Statutory Authority: CAA 112; 42 USC 7412. D. CFR Changes: 40 CFR 61. E. Analysis: EIS.	Don R. Goodwin EPA (MD-13) Research Triangle Park, NC 27711 FTS: 8-629-5271 Comm: 919-541-5271	NPRM: 9/80 FR: 7/81

SIGNIFICANT EPA REGULATIONS UNDER CONSIDERATION—Continued

Title	Summary	Contact	Timetable
	AIR—Continued		
NESHAPS: Maleic Anhydride Manufacture (SAN No. 1127)	A. Description: This regulation will control the emission of benzene from process vents in the manufacture of maleic anhydride. B. Classification: Major. C. Statutory Authority: CAA 112, 42 USC 7412. D. CFR Change: 40 CFR 61. E. Analysis: EIS.	Don Goodwin EPA (MD-13) Research Triangle Park, NC 27711 FTS. 8-629-5271 Comm. 919-541-5271	NPRM: 45FR26660 (4/18/80) FR: 2/81
NESHAPS: Ethylbenzene/Styrene Manufacture (SAN No. 1128 & 1129, Docket No. A-79-49)	A. Description: This regulation will control the emission of benzene from process vents in the manufacture of ethylbenzene and styrene. B. Classification: Major. C. Statutory Authority CAA 112; 42 USC 7412 D. CFR Change: 40 CFR 61. E. Analysis: EIS.	Don Goodwin EPA (MD-13) Research Triangle Park, NC 27711 FTS: 8-629-5271 Comm 919-541-5271	NPRM: 8/80 FR: 6/81
NESHAPS: Benzene Storage (SAN No. 1593)	A. Description: This regulation will control benzene emissions resulting from the storage of pure benzene. B. Classification Routine. C. Statutory Authority: CAA 112, 42 USC 7412 D. CFR Change: 40 CFR 61. E. Analysis: EIS.	Don Goodwin EPA (MD-13) Research Triangle Park, NC 27711 FTS. 8-629-5271 Comm. 919-541-5271	NPRM. 9/80 FR: 8/81
NESHAPS: Listing of Coke Oven Emissions as Hazardous Air Pollutant (SAN No. 1594)	A. Description: A health risk assessment of coke oven emissions is being conducted. If it is determined that these emissions are hazardous then they will be listed under section 112 as hazardous air pollutants and emission standards will be proposed. B. Classification: Listing. C. Statutory Authority: CAA 112, 42 USC 7412 D. CFR Change: 40 CFR 61.	Joe Padgett EPA (MD-12) Research Triangle Park, NC 27711 FTS. 8-629-5204 Comm 919-541-5204	Listing: 9/80
NESHAPS: Airborne Radionuclides (SAN No. 1595, Docket No. A-79-11)	A. Description: This regulation will be the first of a series of regulations which place limits on the release of airborne radionuclides from those sources which pose a significant health risk to the general public. B. Classification: Major. C. Statutory Authority: CAA 112; 42 USC 7412. D. CFR Change: Addition to 40 CFR 61	William Mills EPA (ANR-460) Washington, DC 20460 FTS 8-557-0704 Comm 703-557-0704	NPRM. 12/81 FR: 9/82
• *Policy and Procedures for Airborne Carcinogens* (SAN No. 1596)	A. Description: This regulation will establish the procedures to be used in identifying, assessing, and regulating substances in the air which increase the risk of cancer to the general population B. Classification: Policy Statement. C. Statutory Authority: CAA 112, 42 USC 7412 D. CFR Change: 40 CFR 61.	Joe Padgett EPA (MD-12) Research Triangle Park, NC 27711 FRS 8-629-5204 Comm 9/9-541-5204	ANPRM. 44FR58662 (10/10/79) NPRM: 44FR61620 (10/26/79) Final 12/80
Generic Standards for Control of Airborne Carcinogens (Volatile Organic Compounds) (SAN No. 1618, Docket No. A-79-13)	A. Description: These generic standards would be proposed with the listing of a volatile organic chemical carcinogen as a hazardous air pollutant. B. Classification: Unclassified. C. Statutory Authority: CAA 112 D. CFR Changes. 40 CFR 61	Don Goodwin EPA (MD-13) Research Triangle Park, NC 27711 FTS 8-629-5271 Comm 919-541-5271	ANPRM. 44FR58662 (10/10/79)
Primary Nonferrous Smelter Orders (SAN No. 1301, Docket No. DSSE-78-1)	A. Description. This regulation governs the issuance of nonferrous smelter orders It allows smelters to defer their compliance with the applicable sulfur dioxide emission limitations under State Implementation Plans The regulation allows this deferral as long as certain financial conditions exist and certain interim requirements are met. B. Classification: Routine C. Statutory Authority CAA 119, 42 USC 7419 D. CFR Change 40 CFR 57	David Rochlin EPA (EN-341) Washington, DC 20460 FTS 8-755-2542 Comm 202-755-2542	NPRM: 44FR6284 (1/31/79) FR 6/80

SIGNIFICANT EPA REGULATIONS UNDER CONSIDERATION—Continued

Title	Summary	Contact	Timetable
	AIR—Continued		
Noncompliance Penalties (SAN No. 1302, Docket No. EN-79-1)	A. Description: The purpose of the noncompliance penalty is to recover, in an administrative penalty assessment, the economic value that a delay in compliance may have to the owner of a noncomplying source. The penalty should encourage source owners to come into compliance more quickly by removing these benefits of delay. Increased rates of compliance should lead to an improvement in air quality. B. Classification: Routine. C. Statutory Authority: CAA 120; 42 USC 7420. D. CFR Change: 40 CFR 66, 67. E. Analysis: REG. ANALYSIS.	Robert Homiak EPA (EN-341) Washington, DC 20460 FTS: 8-755-2580 Comm: 202-755-2580	NPRM: 44FR17309 (3/21/79) RPRM: 44FR34524 (6/15/79). FR: 6/80
Stack Height Regulations (SAN No. 1303, Docket No. A-79-01)	A. Description: The Clean Air Act requires that the Agency determine stack heights which will be acceptable for credit of pollution dispension under State Implementation Plans. The Agency will make this determination by limiting stack height on the basis of good engineering practices (GEP). B. Classification: Major. C. Statutory Authority: CAA 123; 42 USC 7423. D. CFR Change: Revision to 40 CFR 51. E. Analysis: EIS, REG. ANALYSIS.	Richard Rhoads EPA (MD-12) Research Triangle Park, NC 27711 FTS: 8-629-5251 Comm: 919-541-5251	NPRM: 44FR 2608 (1/12/79) FR: 8/80
• *Prevention of Significant Deterioration: Set II Pollutants* (SAN No. 1306)	A. Description: These regulations will provide guidelines for States to develop plans which limit emissions of carbon monoxide, nitrogen oxides, and lead in areas designated attainment for ozone, lead and nitrogen dioxide. B. Classification: Major. C. Statutory Authority: CAA 165, 166; 42 USC 7475, 7476. D. CFR Change: 40 CFR 51. E. Analysis: REG. ANALYSIS.	Richard Rhoads EPA (MD-12) Research Triangle Park, NC 27711 FTS: 8-629-5251 Comm: 919-541-5251	ANPRM: 45FR30088 (5/7/80) NPRM: 8/81 FR: 4/82
• *Visibility Protection Requirements* (SAN No. 1307, Docket No. A-79-40)	A. Description: EPA is preparing a report for Congress and guidelines which will require that State Implementation Plans address visibility problems. B. Classification: Major. C. Statutory Authority: CAA 165, 169(a); 42 USC 7475, 7479(a). D. CFR Change: 40 CFR 51. E. Analysis: EIS, REG. ANALYSIS.	Richard Rhoads EPA (MD-12) Research Triangle Park, NC 27711 FTS: 8-629-5251 Comm: 919-541-5251	NPRM: 5/80 FR: 11/80
Emissions Banking (SAN No. 1605)	A. Description: The banking and trading regulation will lay out the legal foundation for systems of emission reduction credits that states can develop to use market incentives to more efficiently accommodate growth and achieve existing air standards. The regulation will specify conditions state rules and programs must meet to be consistent with the CAA. B. Classification: Major. C. Statutory Authority: CAA 173; 42 USC 7503. D. CFR Change: EPA will later assign a CFR part to this regulation.	John Hoffmann EPA (PM-221) Washington, DC 20460 FTS: 8-755-0933 Comm: 202-755-0933	NPRM: 9/80 FR: 1/81
• *Conformity of Federal Actions to State Implementation Plans*	A. Description: These regulations will ensure the conformity of all relevant federal actions in areas subject to the provisions of a state implementation plan (SIP) approved, conditionally approved or promulgated by EPA. Two types of regulations are being considered: (1) requiring other federal departments to establish a process for determining the conformity of their actions with SIPs; and (2) requiring state and local review of the conformity findings of federal departments. B. Classification: Routine C. Statutory authority: CAA 176(c); 42 USC 7506(c) D. CFR Changes: 40 CFR 51, 52, 59	Cary B. Hinton EPA (ANR-445) Washington, DC 20460 FTS: 8-755-0570 Comm: 202-755-0570	ANPRM 45FR21590 (4/1/80) NPRM 11/80 FR: 6/81

SIGNIFICANT EPA REGULATIONS UNDER CONSIDERATION—Continued

Title	Summary	Contact	Timetable
	AIR—Continued		
The purpose of Title II of the Clean Air Act is to control emissions from moving sources of air pollution Mobile sources (cars, trucks, motorcycles and buses) are major sources of carbon monoxide, hydrocarbons, nitrogen oxides and particulate matter Title II also authorizes EPA to regulate fuels and fuel additives.			
Requirements to Build Demonstration Cars Meeting 0 4 gram/mile NOx Standard (SAN No. 1308, Docket No. OMSAPC78-2)	A. Description: All manufacturers with at least a 0 5% share of the U S passenger car market will have to build research vehicles which emit not more than 0 4 grams of nitrogen dioxide per mile EPA published this regulation in interim final form for the 1979 model year and will publish it in final form for the 1980 model year B. Classification Routine C Statutory Authority CAA 202, 42 USC 7521 D CFR Change 40 CFR 85	Robert Wagner EPA Ann Arbor, MI 48105 FTS 8-374-8279 Comm 313-668-4279	NPRM 44FR7780 (2/7/79) FR. 6/80
• *Heavy-Duty Diesel Particulate Regulations* (SAN No. 1310, OMSAPC 78-3)	A. Description: Although these standards are required by the Clean Air Act for 1981 models, development of a new heavy-duty test-procedure to be used as the basis for a standard delayed progress. Promulgation of the transient heavy-duty test procedure allows work to procede on the standard. The Agency intends to have a standard for the 1985 model year B Classification Major C Statutory Authority CAA 202, 42 USC 7521 D CFR Change 40 CFR 86 E Analysis: EIS, REG. ANALYSIS	Merrill Korth EPA Ann Arbor, MI 48105 FTS 8-374-8200 Comm 313-668-4200	NPRM 6/80 FR 4/81
Heavy-Duty Evaporative Emission (SAN No 1312, Docket No. OMSAPC 79-1)	A Description: The Clean Air Act requires that EPA promulgate a test procedure to require measurement of evaporative emissions from vehicles EPA is also developing standards for heavy-duty gasoline vehicles which will regulate fuel evaporation emissions beginning in model year 1983 B Classification: Routine C Statutory Authority CAA 202(a), 42 USC 7521(a). D CFR Change: 40 CFR 86 E Analysis. EIS, REG ANALYSIS	Tim Mott EPA Ann Arbor, MI 48105 FTS 8-374-8208 Comm 313-668-4208	NPRM 45FR28922 (4/30/80) FR 12 80
• *Emission Regulations for 1983 and Later Model Year Light-Duty Trucks* (SAN No 1313, Docket No. OMSAPC 79-2)	A Description: The Clean Air Act requires standards for 6000-8500 pound trucks that will cause a 90% reduction in hydrocarbons and carbon monoxide emissions from baseline by 1983 and a 75% reduction of nitrogen dioxide emissions from baseline by 1985 model year The same standards will be applied to trucks under 6000 pounds GVWR. B Classification Major C Statutory Authority CAA 202(a), 42 USC 7521(a). D. CFR Change 40 CFR 86 E. Analysis. EIS, REG ANALYSIS	Richard Munt EPA Ann Arbor, MI 48105 FTS 8-378-8378 Comm 313-668-4378	NPRM 44FR40784 (7/12 79) FR 6 80
• *Emission Regulations for 1985 and Later Model Year Light Duty Trucks and Heavy Duty Engines* (SAN No. 1315, Docket No. OMSPAC 78-4)	A. Description The Clean Air Act requires EPA to establish emission standards for heavy-duty vehicles (over 6000 pounds GVWR) A 75% reduction for nitrogen dioxide beginning with model year 1985 is scheduled EPA has developed a new test procedure for measuring exhaust emissions which will be used to measure baseline emissions B Classification Major C Statutory Authority CAA 202(a)(3), 42 USC 7521(a)(3) D CFR Change 40 CFR 86 E Analysis: EIS, REG ANALYSIS	Chet France EPA Ann Arbor, MI 48105 FTS 8-374-8338 Comm 313-668-4338	NPRM 10/80 FR 4 81

SIGNIFICANT EPA REGULATIONS UNDER CONSIDERATION—Continued

Title	Summary	Contact	Timetable
	AIR—Continued		
Interim High Altitude Requirements (SAN No. 1316, Docket No. A-79-14)	A. Description: The regulations set requirements for cars to meet high altitude standards for 1981-83 models. B. Classification: Routine. C. Statutory Authority: CAA 202(a),(f); 42 USC 7521(a),(f). D. CFR Change: 40 CFR 86. E. Analysis: EIS.	Richard Wilcox EPA Ann Arbor, MI 48105 FTS: 8-374-8390 Comm: 313-668-4390	ANPRM: 44FR27700 (5/11/79) NPRM: 45FR5988 (1/24/80) FR: 9/80
Importation of Motor Vehicles and Motor Vehicle Engines (SAN No. 1317, Docket No. EN-79-9)	A. Description: These revised regulations allow only certified vehicles and engines to be imported, except that an individual may import an uncertified version for one time only. The purpose is to improve the effectiveness and administration of EPA's present regulation. The proposal will be published in the *Federal Register* after Customs and Treasury complete reviewing it. B. Classification: Routine. C. Statutory Authority: CAA 203; 42 USC 7522. D. CFR Change: 40 CFR 85	Gerald C. Kraus EPA (EN-340) Washington, DC 20460 FTS: 8-472-9413 Comm: 202-472-9413	NPRM: Summer 1980
Amendments to Entry and Access Provisions of EPA Regulations Controlling Air Pollution From Mobile Sources (SAN No. 1521, Docket No. EN-79-15)	A. Description: The regulation implements the Supreme Court's decision in *Marshall v Barlows, Inc.* by amending the "Entry and Access" provisions of mobile source program regulations to make them consistent with the Court's ruling. B. Classification: Routine. C. Statutory Authority: CAA 203, 206, 208, 301, 42 USC 7522, 7525, 7542, 7601. D. CFR Change: Revision to 40 CFR 80, 85, 86.	Stephen J. Turchen EPA (EN-340) Washington, DC 20460 FTS: 8-472-9417 Comm: 202-472-9417	NPRM: 7/80 FR: 10/80
Tampering Enforcement Regulations (SAN No. 1601, Docket No. EN-80-3)	A. Description: These regulations will clarify EPA's enforcement policy against tampering with the emission control systems of motor vehicles. B. Classification: Routine. C. Statutory Authority: CAA 203(a)(3), 301, 42 USC 7522 (a9(3), 7601. D. CFR Change: 40 CFR 85	Barbara C. Gilibert EPA (EN-340) Washington, DC 20460 FTS: 8-472-9350 Comm: 202-472-9350	ANPRM: 6/80 NPRM: 3/81 FR: 9/81
Vehicle Maintenance and Use Regulations (SAN No. 1517, Docket No. EN-79-11)	A. Description: These regulations will insure that manufacturers require only appropriate maintenance of emission-related components and that owners are fully informed of their maintenance burden and resulting liabilities. B. Classification: Routine. C. Statutory Authority: CAA 203(a)(4), 204, 205, 206, 207(a)(3), 301(a)(1); 42 USC 7522(a)(4) 7523, 7524, 7525, 7541(a)(3), 7601(a)(1). D. CFR Change: 40 CFR 85 Subpart V	Richard Friedman EPA (EN-340) Washington, DC 20460 FTS: 8-472-9350 Comm: 202-472-9350	ANPRM: 8/80 NPRM: 4/81 FR: 12/81
Regulations Defining Certificate of Conformity (SAN No. 1318)	A. Description: The regulations identify certain components and specifications required for motor vehicle certification, including the parameters of allowable deviation of parts and the specification for the certification tests. B. Classification: Routine. C. Statutory Authority: CAA 206(a); 42 USC 7525(a). D. CFR Change: 40 CFR 86.	Mark Siegler EPA (EN-340) Washington, DC 20460 FTS: 8-472-9417 Comm: 202-472-9417	NPRM: 39FR44246 (12/23/74) FR: 7/80
Selective Enforcement Auditing of Motorcycles (SAN No. 1319)	A. Description: This regulation would help to ensure that motorcycles to be distributed into commerce are in compliance with applicable emissions standards. It has not yet been determined if this regulation will proceed beyond the ANPRM stage. B. Classification: Unclassified. C. Statutory Authority: CAA 206(a), 208, 301, 42 USC 7525(a), 7542, 7601. D. CFR Change: 40 CFR 86.	Stephen Turchen EPA (EN-340) Washington, DC 20460 FTS: 8-472-9417 Comm: 202-472-9417	ANPRM 43FR1108 (1/6/78)

SIGNIFICANT EPA REGULATIONS UNDER CONSIDERATION—Continued

Title	Summary	Contact	Timetable
	AIR—Continued		
1984 High Altitude Standards (SAN No. 1322, Docket No. EN-79-7)	A. Description: These regulations require all vehicles to meet standards at all altitudes beginning with 1984 models. B. Classification: Routine C. Statutory Authority. CAA 206(f); 42 USC 7525(f) D. CFR Change: 40 CFR 86 E. Analysis: EIS, REG. ANALYSIS.	Richard Wilcox EPA Ann Arbor, MI 48105 FTS 8-374-8390 Comm 313-668-4390	NPRM 5/81 FR 11/81
Nonconformance Penalties for Heavy-Duty Engines (SAN No. 1571)	A. Description: By 1984, manufacturers of heavy-duty engines will have to meet hydrocarbon and carbon monoxide emission standards Under this regulation, manufacturers that fail to comply with the standards but do not exceed a designated maximum pollutant level would be allowed to sell their engines. However, they would be forced to pay a nonconformance penalty (NCP) based on the marginal cost of compliance The NCP would prevent any non-complying manufacturers from achieving a competitive advantage over manufacturers who do comply B. Classification: Routine C. Statutory Authority: CAA 206(g), 301 (a), 42 USC 7525(g), 7601(a) D. CFR Change 40 CFR 86	Timothy Fields EPA (EN-340) Washington, DC 20460 FTS 8-472-9417 Comm 202-472-9417	Notice 44FR9469 (2/13/79) Notice 45FR4143 (1/21/80) NPRM 10/80 FR 5/81
Emissions Design and Defect Warranty (SAN No. 1324, Docket No. MSED-78-1)	A. Description: This regulation will insure that owners are able to take advantage of the 207(a) warranty and that dealers and manufacturers understand their liability. It will also establish uniform procedures for administering the warranty and require owners to be informed of its coverage B Classification: Routine. C. Statutory Authority CAA 207(a)(1), 301(a)(1) 203(a)(4) ; 42 USC 7541(a)(1), 7601(a)(1), 7522(a) D. CFR Change: 40 CFR 85	Rick Friedman EPA (EN-340) Washington, DC 20460 FTS 8-472-9350 Comm 202-472-9350	ANPRM 41FR50566 (11/16/76) NPRM 6/80 FR 11/81
Aftermarket Parts Certification (SAN No. 1325, Docket No. EN-79-8)	A. Description: This regulation establishes a procedure that allows autoparts manufacturers voluntarily to certify that use of their parts will not increase vehicle emissions or void the owner's emission warranty. B. Classification: Routine C. Statutory Authority: CAA 207(a)(2), 301, 42 USC 7541(a)(2), 7601. D. CFR Change: 40 CFR 85	David Feldman EPA (EN-340) Washington, DC 20460 FTS 8-472-9350 Comm 202-472-9350	ANPRM 39FR40192 (11/14/74) NPRM 44FR46686 (8/8/79) FR 8/80
Allowable Maintenance for Light Duty Vehicles (SAN No. 1597)	A. Description. The Clean Air Act requires that automobile manufacturers furnish to the purchaser written instructions for proper use and maintenance of new motor vehicles and engines This regulation will determine the content of those instructions on the basis of maintenance which is likely to be performed and which is necessary The Agency has temporarily postponed the schedule for completion of this regulation. B. Classification. Routine. C Statutory Authority: CAA 207(c)(3), 42 USC 7541(c)(3) D. CFR Change. 40 CFR 86	Merill Korth EPA Ann Arbor, MI 48105 FTS 8-374-8299 Comm 313-668-4208	
Fuels and Fuel Additives (SAN No 1328)	A. Description These protocols will help determine effects of fuel and fuel additives on public health and emission control devices B. Classification: Major. C. Statutory Authority CAA 211, 42 USC 7545 D. CFR Change 40 CFR 79 6	Richard A Rykowski Matt Bills EPA Ann Arbor, MI 48105 FTS 8-374-8339 Comm 313-668-4339	NPRM 7/81 FR 7/82

SIGNIFICANT EPA REGULATIONS UNDER CONSIDERATION—Continued

Title	Summary	Contact	Timetable
	AIR—Continued		
High Altitude Performance Adjustments (SAN No. 1329)	A. Description: This regulation sets procedures for approval of manufacturers' adjustments to light duty cars and trucks built for high altitude operation. B. Classification: Routine. C. Statutory Authority: CAA 215; 42 USC 7549 D. CFR Change: 40 CFR 86.	Thomas Ball EPA Ann Arbor, MI 48105 FTS: 8-374-8280 Comm: 313-668-4280	NPRM: 45FR6012 (1/24/80) FR: 9/80
Turbine Aircraft Gaseous Emissions Retrofit and Modification of 1973 Standards (SAN No. 1330, Docket No. OMSAPC 78-1)	A. Description: This regulation proposes revisions in emission standards for commercial aircraft to reduce hydrocarbons, carbon monoxide and nitrogen oxide. B. Classification: Routine. C. Statutory Authority: CAA 231; 42 USC 7571 D. CFR Change: 40 CFR 87. E. Analysis: EIS.	Richard Wilcox EPA Ann Arbor, MI 48105 FTS: 8-374-8390 Comm: 313-668-4390	NPRM: 43FR12615 (3/24/78) FR: 6/80
Regional Consistency (SAN No. 1331, Docket No. OAQPS 79-11)	A. Description: The Clean Air Act requires that EPA provide for consistent implementation by Regional Offices. B. Classification: Routine. C. Statutory Authority: CAA 301; 42 USC 7601. D. CFR Change: 40 CFR 56. E. Analysis: EIS.	Darryl Tyler EPA (MD-13) Research Triangle Park, NC 27711 FTS: 8-629-5425 Comm: 919-541-5425	NPRM: 44FR13043 (3/9/79) FR: 7/80
Fuel Economy Data — 1981 Model Year (SAN No. 1629)	A. Description: This action will revise Part 600 to incorporate several provisions intended to ensure the representativeness of data used to calculate fuel economy values. These revisions will 1) decrease the maximum allowable test vehicle system mileage accumulation, 2) redefine transmission class to differentiate between front-and rear-wheel drive, 3) require additional test data when base level fuel economy would otherwise be from a zero sales vehicle configuration, and 4) allow for more accurate and thorough reflection of the fuel economy effect of running changes. B. Classification: Routine. C. Statutory Authority: EPCA 1901 D. CFR Change: Revision to 40 CFR 600	Phillip Leung EPA Ann Arbor, MI 48105 FTS: 8-374-8248 Comm: 313-668-4248	NPRM: 7/80 FR: 11/80

DRINKING WATER

The Safe Drinking Water Act of 1974 requires EPA to establish primary and secondary drinking water regulations to assure safe drinking water supplies for the public. Primary regulations are aimed at protecting public health. They establish maximum allowable containment levels in drinking water and provide for water treatment technologies and general criteria for water supply system operation. Secondary regulations are designed to protect public welfare and deal with taste, odor, and appearance of drinking water. The act also provides for developing regulations to protect underground sources of drinking water (aquifiers) from contamination. The chief source of such contamination is the injection into the ground of various waste products as a means of disposing of them.

• *Control of Organic Chemicals in Drinking Water by Granular Activated Carbon Systems* (SAN No. 1201)	A. Description: The regulation will require use of granular activated carbon (GAC) or equivalent technology in those public water systems subject to contamination by synthetic organic chemicals. B. Classification: Major. C. Statutory Authority: SDWA 1412; 42 USC 300g-1. D. CFR Change: 40 CFR 141. E. Analysis: REG. ANALYSIS.	Joe Cotruvo EPA (WH-550) Washington, DC 20460 FTS: 8-472-5016 Comm: 202-472-5016	ANPRM: 41FR28991 (7/14/76) NPRM: 43FR5756 (2/9/78) RPRM: 12/80

SIGNIFICANT EPA REGULATIONS UNDER CONSIDERATION—Continued

Title	Summary	Contact	Timetable
	DRINKING WATER—Continued		
Technical Amendments to the National Primary Drinking Water Regulations (SAN No. 1202, Docket No. FRL 1230-3)	A. Description: These amendments adjust the previously published National Interim-Primary Drinking Water regulations. They will provide additional flexibility for community water systems to comply with the microbiological Maximum Contaminant Level (MCL) and will also provide non-community systems with modified requirements for microbiological MCL, turbidity monitoring, and nitrate MCL. There will also be modifications to public notification procedures and new requirements for community water systems to monitor and report sodium levels. B. Classification: Routine. C. Statutory Authority: SDWA 1412; 33 USC 300g-1. D. CFR Change: Revisions to 40 CFR 141	Joe Cotruvo EPA (WH-550) Washington, DC 20460 FTS. 8-472-5016 Comm: 202-472-5016	NPRM: 44FR42246 (7/19/79) FR: 6/80
Maximum Contaminant Levels for Certain Organic - Chemicals Found in Ground Water (SAN No. 1567)	A. Description: The regulation will establish the Maximum Contaminant Level (MCL) for certain organic chemicals that are most commonly found in drinking water drawn from groundwater sources and that may have adverse effects on human health. The Safe Drinking Water Act requires the Agency to establish these contaminant levels. B. Classification: Major. C. Statutory Authority: SWDA 1412, 42 USC 300g-1. D. CFR Change: Additions to 40 CFR 141	Joe Cotruvo EPA (WH-550) Washington, DC 20460 FTS 8-472-5016 Comm: 202-472-5016	ANPRM: 41FR28991 (7/14/76) NAS Recommendations: 42FR35764(7/11/77) NPRM: 9/80
Underground Injection Control Program Regulations (SAN No. 1205)	A. Description: These regulations are intended to protect underground drinking water supplies from contamination caused by improper underground injection of fluids. States can apply for primary enforcemment authority if they meet the minimum criteria specified in the regulations. The regulations may require a permit program to ensure that there is a case-by-case determination. B. Classification: Major C. Statutory Authority: SWDA 1421(a), 42 USC 300(h)(a) D. CFR Change: 40 CFR 146 E. Analysis: EIS, REG ANALYSIS.	Tom Belk EPA (WH-550) Washington, DC 20460 FTS. 8-426-3934 Comm. 202-426-3934	NPRM. 44FR23738 (4/20/79) FR. 6/80
Technical Amendments to the Implementation Regulations for the Interim Primary Drinking Water Regulations (SAN No. 1549)	A. Description: These regulations define the implementation and enforcement requirements for the National Interim Primary Drinking Water Regulations. These requirements will apply to States which choose to operate the Public Water System Supervision Program. EPA amended the Primary Drinking Water Regulations in 1979 and will issue additional amendments in June 1980. This set of amendments will update the Implementation Regulations to correspond with the changes in Primary Drinking Water Regulations and will make minor changes to clarify and simplify the language. B. Classification: Routine C. Statutory Authority: SDWA 1413-1416, 1445, 1450; 42 USC 300g-2, g-3, g-4, g-5, 300j-4, j-9 D. CFR Change: 40 CFR 142.	James F. Manwaring EPA (WH-550) Washington, DC 20460 FTS 8-472-4152 Comm. 202-472-4152	NPRM: 39FR33228 (8/7/75) FR. 40FR2916 (1/20/76) IFR 43FR5372 (2/8/78) FR. 6/80

SIGNIFICANT EPA REGULATIONS UNDER CONSIDERATION—Continued

Title	Summary	Contact	Timetable
	NOISE		
The Noise Control Act of 1972, as amended by the Quiet Communities Act of 1978, authorizes EPA to promulgate regulations to protect the public health and welfare from noise pollution. Sections 5 and 6 of the Act require that the Agency identify major sources of noise pollution and promulgate noise emission standards for newly manufactured products listed as major sources of noise that are distributed in commerce. Under section 8, EPA is authorized to require labeling of consumer products as to their noise-related characteristics. The Agency has established general labeling requirements and will expand the number of products covered under this program. Section 17 of the Act provides for limiting noise from railroad engines, cars and facilities. These regulations are enforced by the Federal Railroad Administration of the Department of Transportation			
Noise Emission Standards for Buses (SAN No. 1170, Docket No. ONAC 77-6)	A. Description: This regulation sets noise emission standards for new interstate, city, and school buses. B. Classification: Routine. C. Statutory Authority: NCA 5, 6; 42 USC 4904, 4905 D. CFR Change: Additions to 40 CFR 205 E Analysis: EIS	Kenneth Feith EPA (ANR 490) Washington, DC 20460 FTS: 8-557-2710 Comm: 703-557-2710	NPRM: 42FR45775 (9/12/77) FR: 6/80
Noise Emission Standards for Wheel & Crawler Tractors (SAN No. 1172, ONAC 77-2)	A. Description: This regulation sets noise emission standards for new wheel and crawler tractors manufactured primarily for construction applications. B. Classification: Major C Statutory Authority: NCA 5, 6; 42 USC 4904, 4905 D. CFR Change: Addition to 40 CFR 204 E. Analysis: EIS.	Henry Thomas EPA (ANR-490) Washington, DC 20460 FTS: 8-557-7743 Comm: 702-557-7743	NPRM. 42FR35803 (7/11/77) FR: 12/82
Noise Emission Standards for Motorcycles (SAN No. 1173, Docket No. ONAC 77-10)	A. Description: This regulation sets noise emission standards for new motorcycles and new motorcycle replacement exhaust systems distributed in commerce. B. Classification: Major C. Statutory Authority: NCA 5, 6; 42 USC 4904, 4905. D. CFR Change: Additions to 40 CFR 205 E. Analysis: EIS, REG. ANALYSIS	Henry Thomas EPA (ANR-490) Washington, DC 20460 FTS 8-557-7743 Comm 703-557-7743	NPRM: 43FR10822 (3/15/78) FR: 7/80
Noise Labeling Program (SAN No. 1606)	A Description: The ANPRM will inform industry and the public of EPA's intent to regulate noise labeling of products of certain industries. The Agency initiated this program in 1979 with the General Provisions and Hearing Protector regulations. The ANPRM will be followed by proposals for specific industries. B Classification: Unclassified. C Statutory Authority: NCA 8; 42 USC 4907 D CFR Change: 40 CFR 211	Fred Mintz EPA (ANR-490) Washington, D.C 20460 FTS. 8-557-2710 Comm: 703-557-2710	ANPRM 9/80
Importation of Noise Emitting Products (SAN No 1178)	A. Description: This regulation is being written in conjunction with the U.S. Customs Service to control, under NCA section 9, the importation of products regulated under NCA sections 6, 8 B Classification: Routine. C Statutory Authority: NCA 9; 42 USC 4908 D CFR Change: 40 CFR 208	Timothy Dwyer EPA (EN-387) Washington, DC 20460 FTS 8-557-7470 Comm 703-557-7470	NPRM 7/81 FR 2/82
Administrative Hearing Procedures (SAN No. 1176)	A. Description: EPA is writing this regulation to lay the groundwork for procedures for hearings to issue remedial orders under NCA section 11(d). These are adjudicatory hearings under the Administrative Procedures Act (5 USC 554). B. Classification: Routine C Statutory Authority: NCA 11, 42 USC 4910 D CFR Change: 40 CFR 210	Timothy Dwyer EPA (EN-387) Washington, DC 20460 FTS 8-557-7406 Comm 703-557-7406	IFR: 43FR34132 (8/3/78) FR: 10/80

SIGNIFICANT EPA REGULATIONS UNDER CONSIDERATION—Continued

Title	Summary	Contact	Timetable
	NOISE—Continued		
Low Noise Emission Products (SAN No. 1177, Docket No. ONAC 77-7)	A. Description: If a product has a low noise emission level, it may be entitled to special consideration in Federal purchasing. This regulation establishes guidelines for determining these low levels. B. Classification: Routine. C. Statutory Authority: NCA 15; 42 USC 4914. D. CFR Change: Additions to 40 CFR 203, 204, 205. E. Analysis: EIS.	Henry Thomas EPA (ANR 490) Washington, DC FTS: 8-557-7743 Comm: 703-557-7743	NPRM: 42FR27441 (5/27/77) FR: 8/80
Noise Emission Standards for Transportation Equipment: Interstate Rail Carriers – Property Line Noise Standards. (SAN No. 1179A, Docket No. ONAC 80-1)	A. Description: This regulation establishes noise emission standards (limits) on the overall noise generated from railroad facilities (including operations and equipment noise). The D.C. Circuit has set January 1981 as the deadline for promulgation of the final rule. See *Association of American Railroads v. Costle*, C.A. No. 76-1353. B. Classification: Routine. C. Statutory Authority: NCA 17; 42 USC 4916. D. CFR Change: 40 CFR 201. E. Analysis: EIS.	Robert Rose EPA (ANR 490) Washington, DC 20460 FTS: 8-557-7666 Comm: 703-557-7666	NPRM: 44FR22960 (4/17/79) NPRM: 44FR25268 (4/30/79) FR: 1/81
Railroad Noise Emission Standards: Special Local Determinations (SAN No. 1180, Docket No. ONAC 76-11)	A. Description: This regulation establishes procedures and criteria for State and local governments to apply for exceptions from federal rules. The Agency expects that it will only make exceptions on those rare occasions when special circumstances make the federal rules inapplicable. B. Classification: Routine. C. Statutory Authority: NCA 17(c)2; 42 USC 4916(c)(2). D. CFR Change: 40 CFR 201.	Robert C. Rose EPA (ANR 490) Washington, DC 20460 FTS: 8-557-7666 Comm: 703-557-7666	NPRM: 41FR52317 (11/29/76) RPRM: 1982
	PESTICIDES		
The Federal Insecticide, Fungicide, and Rodenticide Act (FIFRA) requires that EPA, with the cooperation of the States for certain activities, regulate the use of pesticide products in the United States. Under Section 3 of the Act all manufacturers of pesticides must register their products with EPA. The Agency is presently working on regulations (SAN Nos. 1141-1148, 1619-1623) that specify the test data standards and the reporting and labeling requirements for registration applications. EPA is also simplifying procedures for registration and reregistration of pesticide products. (SAN No. 1524)			
• *Pesticide Registration Guidelines: Introduction* (SAN No. 1141)	A. Description: This action states the general purpose of the guidelines and specifies the degree of flexibility in their requirements and in the use of interim data. It also defines terms used throughout the guidelines, and sets out requirements for keeping data and test samples at laboratories. B. Classification: Routine. C. Statutory Authority: FIFRA 3; 7 USC 136a. D. CFR Change: 40 CFR 163 Subpart A.	Bill Preston EPA (TS-769) FTS 8-557-1405 Comm: 703-557-1405	NPRM: 43FR29696 (7/10/78) FR: 11/80
• *Pesticide Registration Guidelines: Applicability of Data Requirements* (SAN No. 1619)	A. Description: This specialized regulation will instruct registration applicants as to data requirements for new products. It will consist of listings of the different requirements for different end uses. B. Classification: Routine. C. Statutory Authority: FIFRA 3; 7 USC 136a. D. CFR Change: 40 CFR 163 Subpart B.	Bill Preston EPA (TS-769) Washington, D.C. 20460 FTS: 8-557-1405 Comm: 703-557-1405	IFR: 11/80
• *Chemistry Requirements: Product Chemistry* (SAN No. 1143)	A. Description: This regulation covers requirements for data on formation, identification, and quantification of the ingredients and impurities in pesticide products, and on chemical and physical characteristics of the products and their components. The Agency will propose the section on microbial bioassay in July. B. Classification: Routine. C. Statutory Authority: FIFRA 3; 7 USC 136a. D. CFR Change: 40 CFR 163 Subpart D.	Bill Preston EPA (TS-769) Washington, DC 20460 FTS: 8-557-1405 Comm: 703-557-1405	FR: 7/80 NPRM: 7/80

SIGNIFICANT EPA REGULATIONS UNDER CONSIDERATION—Continued

Title	Summary	Contact	Timetable
	PESTICIDES—Continued		
• *Hazard Evaluation: Wildlife and Aquatic Organisms* (SAN No. 1144)	A. Description: This action covers data requirements for studies of pesticide effects on birds, wild animals, fish, and other aquatic animals. B. Classification: Routine. C. Statutory Authority: FIFRA 3; 7 USC 136a. D. CFR Change: 40 CFR 163 Subpart E.	Bill Preston EPA (TS-769) Washington, DC 20460 FTS: 8-557-1405 Comm: 703-557-1405	NPRM: 43FR29696 (7/10/78) FR: 6/80
• *Hazard Evaluation: Humans and Domestic Animals* (SAN No. 1145)	A. Description: This description specifies data requirements for studies of pesticide effects in laboratory animals for assessment of potential hazards to humans and domestic animals. B. Classification: Major. C. Statutory Authority: FIFRA 3; 7 USC 136a. D. CFR Change: 40 CFR 163, Subpart F.	Bill Preston EPA (TS-769) Washington, DC 20460 FTS: 8-557-1405 Comm: 703-557-1405	NPRM: 43FR37336 (8/22/78) FR: 9/80
• *Product Performance* (SAN No. 1146)	A. Description: This action specifies the data that registrants must submit to demonstrate that pesticide products will control pests as specified in label claims. B. Classification: Routine. C. Statutory Authority: FIFRA 3; 7 USC 136(a) D. CFR Change: 40 CFR 163 Subpart G.	Bill Preston EPA (TS-769) Washington, DC 20460 FTS: 8-557-1405 Comm: 703-557-1405	NPRM: 8/80 FR: 5/81
• *Label Development and Improvement* (SAN No. 1147)	A. Description: This action describes all essential parts of a pesticide product label, including how labeling must comply with the requirements of FIFRA and how claims, precautions and directions must correspond to evidence developed in tests performed by or for the registration applicant. B. Classification: Routine. C. Statutory Authority: FIFRA 3; 7 USC 136a. D. CFR Change: 40 CFR 163 Subpart H.	Bill Preston EPA (TS-769) Washington, DC 20460 FTS: 8-557-1405 Comm: 703-557-1405	NPRM: 8/80 FR: 5/81
• *Experimental Use Permits* (SAN No. 1142)	A. Description: This action specifies that data and labeling must be submitted in support of an application for an experimental use permit. It also defines procedures which must be followed to obtain a permit. B. Classification: Routine. C. Statutory Authority: FIFRA 3; 7 USC 136a. D. CFR Change: 40 CFR 163 Subpart I.	Bill Preston EPA (TS-769) Washington, DC 20460 FTS: 8-557-1405 Comm: 703-557-1405	NPRM: 6/80 FR: 2/81
• *Hazard Evaluation: Non-Target Plants and Micro-Organisms* (SAN No. 1148)	A. Description: This action prescribes data required to evaluate adverse effects on nontarget areas; it also provides guidance to submit data on spray draft and phytotoxicity. B. Classification: Routine. C. Statutory Authority: FIFRA 3; 7 USC 136a. D. CFR Change: 40 CFR 163 Subpart J.	Bill Preston EPA (TS-769) Washington, DC 20460 FTS: 8-557-1405 Comm: 703-557-1405	NPRM: 6/80 FR: 3/81
• *Exposure Data Requirements* (SAN No. 1620)	A. Description: This action provides guidance on means to calculate the length of time required before persons can safely re-enter a pesticide-treated area, and the data requirements needed for the calculation. B. Classification: Routine C. Statutory Authority: FIFRA 3; 7 USC 136a. D. CFR Change: 40 CFR 163 Subpart K.	Bill Preston EPA (TS-769) Washington, D.C. 20460 FTS: 8-557-1405 Comm: 703-557-1405	NPRM: 7/80 FR: 5/81
• *Hazard Evaluation: Nontarget Insets*, (SAN No. 1621)	A. Description: This regulation specifies the data requirements for tests designed to reveal any potential adverse effects to bees and other nontarget insects B. Classifion: Routine. C. Statutory Authority: FIFRA 3; 7 USC 136a. D. CFR Change: 40 CFR 163 Subpart L.	Bill Preston EPA (TS-769) Washington, D.C. 20460 FTS: 8-557-1405 Comm: 703-557-1405	NPRM: 7/80 FR: 5/81

SIGNIFICANT EPA REGULATIONS UNDER CONSIDERATION—Continued

Title	Summary	Contact	Timetable
	PESTICIDES—Continued		
• *Data Requirements for Biorational Pesticides* (SAN No. 1622).	A. Description: This action prescribes data requirements for studies conducted with pest control organisms such as bacteria, fungi, and viruses, to determine possible adverse effects to humans and other nontarget organisms in the environment; studies with chemicals derived from organisms, such as sex attractants and insect growth regulators, are also covered by data requirements in this subpart. B. Classification: Routine C. Statutory Authority: FIFRA 3, 7 USC 136a D. CFR Change: 40 CFR 163 Subpart M	Bill Preston EPA (TS -769) Washington, D C 20769 FTS 8-557-1405 Comm. 703-557-1405	NPRM: 10/80 FR: 8/81
• *Chemistry Requirements: Environmental Fate.* (SAN No. 1623).	A. Description: This regulation specifies the data required to demonstrate fate of pesticides in the environment, such as through degradation, metabolism, mobility, dissipation, accumulation, and similar routes. (This action was proposed as part of Subpart D). B. Classification: Routine C. Statutory Authority: FIFRA 3; 7 USC 136a. D. CFR Change: 40 CFR 163 Subpart N.	Bill Preston EPA (TS-769) Washington, D C 20460 FTS 8-557-1405 Comm 703-557-1405	NPRM: 43FR29696 (7/10/78) FR: 8/80
Modification of Regulations for Pesticides Registration, Classification, and Incorporation of Generic Standards (SAN No 1524)	A. Description: These regulations will revise procedures and requirements for the registration of pesticides. This proposal would revise the regulations covering the registration of new pesticide chemicals and products, the registration and reregistration of old pesticide chemicals and products, and the classification and rebuttable presumption against registration (RPAR) processes. B. Classification: Major. C. Statutory Authority: FIFRA 3(c)(2)(C), 7 USC 136d. D. CFR Change: 40 CFR 162 Subpart A.	Henry Jacoby EPA (TS-767) Washington, DC 20460 FTS 8-755-2562 Comm 202-755-2562	ANPRM 44FR76311 (12/26/79) NPRM 10/80 FR: 9/81
Other Regulatory Restrictions (SAN No. 1558)	A. Description: Restricting use of pesticides to certified users does not always suffice to protect the environment from unreasonable adverse effects The Agency is writing this regulation in order to develop additional, environmentally adequate kinds of restrictions on pesticides classified for restricted use. B. Classification: Major. C. Statutory Authority: FIFRA 3(d)(1)(C)(ii), 7 USC 136d. D. CFR Change Revision to 40 CFR 162 11 (C)(5). E. Analysis: EIS	John Street EPA (TS-767) Washington, DC 20460 FTS 8-426-2510 Comm 202-426-2510	ANPRM 6/80 FR: 4/81
State Registration to Meet Special Local Needs (SAN No. 1153)	A. Description: This regulation defines the scope of state jurisdiction to register pesticides for uses that Federal registrations do not cover. B. Classification: Routine. C. Statutory Authority: FIFRA 24(c); 7 USC 136v D. CFR Change: 40 CFR 162.	Phil Gray EPA (TS-770-M) Washington, DC 20460 FTS 8-472-9400 Comm 202-472-9400	NPRM 44FR46414 (8/7/79) FR: 9/80
Proposed Reform of Pesticide RPAR Procedures and Hearing Regulations (SAN No. 1609, Docket No. OPP-60004)	A. Description: These regulations have two major purposes. The first is to describe clearly and explicitly the procedures EPA follows in practice in reviewing pesticides under the Rebuttable Presumption Against Registration (RPAR) program The second is to restructure the formal hearing process through which pesticides use registration must be cancelled. B. Classification: Routine. C. Statutory Authority: FIFRA 25, 7 USC 136w D. CFR Change: 40 CFR 162 & 164	Ed Gray EPA (A-132) Washington, D C 20460 FTS 8-755-0638 Comm 202-755-0638	NPRM. 6/80

SIGNIFICANT EPA REGULATIONS UNDER CONSIDERATION—Continued

Title	Summary	Contact	Timetable
	PESTICIDES—Continued		
Closed System Packaging (SAN No. 1523)	A. Description: The objective of this rule is to reduce the hazards associated with the transfer, mixing, and loading of pesticides. These hazards have resulted in adverse effects on pesticide mixers and loaders of certain classes of pesticides. B. Classification: Routine. C. Statutory Authority: FIFRA 25(c)(3); 7 USC 136e. D. CFR Change: Addition to 40 CFR 162.	William Jacobs EPA (TS-767) Washington, DC 20460 FTS: 8-755-4851 Comm: 202-755-4851	ANPRM: 44FR54508 (9/20/79) NPRM: Late Summer 1980 FR: Early 1981
State Enforcement of Pesticide Violations (SAN No. 1563)	A. Description: This policy statement will give the Agency interpretation of Sections 26 and 27 of FIFRA, which provide for State enforcement of pesticide use violations. Under Section 27(b) the Agency is writing a related specialized regulation to establish procedural rules for rescinding State enforcement primary if the Administrator determines that a State is not carrying out its enforcement responsibility. B. Classification: Policy Statement C. Statutory Authority: FIFRA 26,27; 7 USC 136W-1,W-2 D. CFR Change: 40 CFR 173	Steve Leifer EPA (EN-342) Washington, DC 20460 FTS: 8-755-0970 Comm: 202-755-0970	NPRM: 8/80 FR: 12/80
Tolerance Revocation Program (SAN No. 1560)	A. Description: This regulation prescribes methods for revoking tolerance petitions when a pesticide registration is canceled. B. Classification: Routine. C. Statutory Authority: FDCA 408, 409; 21 USC 678, 679. D. CFR Change: Deletions from 40 CFR 180.147 (DDT), 180.135 (dieldrin), 180.37 (aldrin), 180.140(BHC)	Jesse Mayes EPA (TS-767) Washington, DC 20460 FTS: 8-755-9315 Comm: 202-755-9315	NPRM: 9/80 FR: 11/80

RADIATION

Reorganization Plan No. 3 of 1970 transferred to EPA the authorities of the Federal Radiation Council. This included authority to develop guidance for other federal agencies to follow in limiting radiation exposures. This guidance is issued by the President. Additionally, EPA was given authority, under the Atomic Energy Act, to establish generally applicable environmental standards to protect public health from exposure to radiation. The NRC, the Department of Energy, and other federal agencies are responsible for implementing and enforcing these standards.

EPA is also developing regulations for clean up and disposal of uranium mill tailing piles under the Uranium Mill Tailings Radiation Control Act of 1978.

Guidance for Occupational Radiation Exposure (SAN No. 1161, Docket No. A-79-46)	A. Description: This guidance updates existing (1960) radiation occupational exposure limits for workers at Federal facilities and those facilities inspected by Federal agencies. B. Classification: Guidance. C. Statutory Authority: AEA 274(h); 42 USC 2021(h), Reorganization Plan No. 3 of 1970. D. CFR Change: This action will not be codified in CFR.	Luis Garcia EPA (ANR 460) Washington, DC 20460 FTS: 8-557-8224 Comm: 703-557-8224	ANPRM: 44FR53785 (9/17/79) NPRM: 9/80 FR: 7/81
Transuranic Elements (SAN No. 1162)	A. Description: This guidance to Federal agencies establishes dose rate limits for people exposed to transuranic elements in the general environment. The guidance considers both human inhalation and human ingestion of transuranium elements, and establishes a maximum dose rate to lungs and bones for members of the general population. The recommendations also provide for a dose rate limit to lungs and bones for the most exposed segment of the population. This dose rate limit can be associated with an estimated maximum risk of one additional death per million persons continuously exposed at this rate per year. EPA has approved this guidance and has sent it to the President for signature. B. Classification: Guidance. C. Statutory Authority: AEA 274(h); 42 USC 2021(h); Reorganization Plan No. 3 of 1970. D. CFR Change: This action will not be codified in CFR.	Gordon Burley EPA (ANR 460) Washington, DC 20460 FTS: 8-557-8610 Comm: 703-557-8610	NPRM: 42FR60956 (11/3/77) FR: Pending

SIGNIFICANT EPA REGULATIONS UNDER CONSIDERATION—Continued

Title	Summary	Contact	Timetable
	RADIATION—Continued		
• *Environmental Radiation Protection Standards for Management and Disposal of Radioactive Waste* (SAN No. 1163)	A. Description: This regulation will set standards to govern the licensing, design, and operation of permanent, high-level radioactive waste storage facilities. The enforcement of these standards will be the responsibility of the Nuclear Regulatory Commission, which may choose to issue additional regulations. B. Classification: Major. C. Statutory Authority: AEA 274(h); 42 USC 2021(h); Reorganization Plan #3 of 1970. D. CFR Change: 40 CFR 191. E. Analysis: EIS, REG. ANALYSIS.	Dan Egan EPA (ANR 459) Washington, DC 20460 FTS: 8-557-8610 Comm: 703-557-8610	NPRM: 6/80 FR: 6/81
Environmental Criteria for Radioactive Wastes (SAN No. 1164)	A. Description: The criteria are general guidance to Federal agencies on definitions of radioactive wastes and factors they should consider in evaluating disposal modes and sites. B. Classification: Guidance. C. Statutory Authority: AEA 274(h); 42 USC 2021 (h); Reorganization Plan No. 3 of 1970. D. CFR Change: This action will not be codified in CFR.	Robertson Augustine EPA (ANR 458) Washington, DC 20460 FTS: 8-557-8950 Comm: 703-557-8950	NPRM: 43FR53262 (11/15/78) FR: 8/80
Protective Action Guidance for Accidental Airborne Releases of Radioactivity (SAN No. 1514, Docket No. A-79-11)	A. Description: This guidance will provide emergency action levels to be used in cases of accidental release of airborne radionuclides. It will minimize the risk to the health and safety of the general public following potential radioactivity releases from accidents at nuclear power plants, from accidents during the transport of radioactive materials, and from other events that may cause airborne releases of radioactive material. B. Classification: Guidance. C. Statutory Authority: AEA 274; 42 USC 2021; Reorganization Plan No. 3 of 1970. D. CFR Change: This action will not be codified in CFR. E. Analysis: EIS.	Allen Richardson EPA (ANR 460) Washington, DC 20460 FTS: 8-557-8927 Comm: 703-557-8927	Indefinitely Postponed
Radiofrequency Radiation Guidance (SAN No. 1525)	A. Description: This guidance will serve to limit exposure to radiofrequency monitoring radiation which poses a potential health risk. B. Classification: Guidance. C. Statutory Authority: AEA 274(h); 42 USC 2021(h); Reorganization Plan No. 3 of 1970. D. CFR Change: This action will not be codified in CFR. E. Analysis: EIS.	David Janes EPA (ANR 461) Washington, DC 20460 FTS. 8-427-7604 Comm. 301-427-7604	NPRM: 2/81
• *Remedial Action Standards for Inactive Uranium Processing Sites* (SAN No. 1166, Docket No. A-79-25)	A. Description: This regulation defines standards for the clean-up and disposal of uranium mill tailings from inactive sites. Based on the EPA standards, the Department of Energy will take remedial action. In order to expedite clean up, the Agency is separating the timetables for the clean up and disposal sections of the regulation. The schedule for the disposal section is proposal in June 1980 and promulgation in December 1980. B. Classification: Major. C. Statutory Authority: UMTRCA 206, AEA 275; 42 USC 2022. D. CFR Change: 40 CFR 192. E. Analysis: EIS.	Stan Lichtman EPA (ANR 458) Washington, DC 20460 FTS: 8-557-8927 Comm: 703-557-8927	IFR: 45FR27366 (4/22/80) NPRM: 45FR27370 (4/22/80) NPRM: 6/80 FR: 10/80 FR: 12/80

SIGNIFICANT EPA REGULATIONS UNDER CONSIDERATION—Continued

Title	Summary	Contact	Timetable
	RADIATION—Continued		
Environmental Standards for Uranium Mill Tailings (Active Sites) (SAN No. 1166A)	A. Description: The administrator is required to issue generally applicable standards for protecting the public health and safety, and the environment, from certain radiological and nonradiological hazards of uranium. These are the hazards associated with processing, keeping, transfering, and disposing of uranium byproduct material at sites which either (a) process the uranium ore primarily for its source material content or (b) dispose of the uranium byproduct material. B. Classification: Routine. C. Statutory Authority: UMTRCA 206 AEA 275(b); 42 USC 2022(b). D. CFR Change: 40 CFR 192.	Stan Lichtman EPA (ANR 458) Washington, DC 20460 FTS: 8-557-8927 Comm: 7-3-557-8927	NPRM: 3/81 FR: 10/81
	SOLID WASTE		
The primary goals of the Resource Conservation and Recovery Act are 1) to improve the management of solid wastes in order to protect human health and the environment and 2) to conserve valuable material and energy resources. More specifically, the Act calls for State programs authorized by EPA to regulate hazardous waste management from generation through disposal, and for the States to regulate the disposal on land of all other solid wastes in accordance with minimum Federal criteria. The Act also establishes resource recovery and conservation as the preferred approach to solid waste management. The Act requires EPA to establish regulations and guidelines to achieve these objectives and to provide for financial and technical assistance to State and local governments, research and special studies, and public participation and education.			
• *Hazardous Waste Criteria—Identification and Listing* (SAN No. 1191, Docket No. 3001)	A. Description: This regulation defines wastes for control under the nationwide hazardous waste management program. It defines criteria for identifying characteristics of hazardous wastes, based on ignitability, corrosivity, reactivity, and extract procedure toxicity. It also defines criteria for listing hazardous wastes. Phase IB will define additional hazardous wastes; phase II will cover parts of the regulation requiring additional work to resolve issues, address public comments, and complete the administrative record. B. Classification: Major. C. Statutory Authority: RCRA 3001; 42 USC 6921 D. CFR Change: 40 CFR 261. E. Analysis: EIS, REG. ANALYSIS.	Alan Corson EPA (WH-565) Washington, DC 20460 FTS: 8-755-9187 Comm: 202-755-9187	ANPRM: 42FR22332 (5/2/77) NPRM: 43FR58946 (12/18/78) FR(PhaseIA): 45FR33084(5/19/80) FR(PhaseIB): 6/80 FR(PhaseII): 11/80
• *Standards for Owners and Operators of Hazardous Waste Treatment, Storage, and Disposal Facilities* (SAN No. 1194, Docket No. 3004)	A. Description: This regulation requires facilities that manage hazardous waste to meet certain standards for operating practices, location, and design. These standards have been set to protect the quality of air, surface-water, and groundwater. B. Classification: Major. C. Statutory Authority: RCRA 3004; 42 USC 6924 D. CFR Change: 40 CFR 264, 265, 266. E. Analysis: EIS, REG. ANALYSIS.	John Lehman EPA (WH-565) Washington, DC 20460 FTS: 8-755-9185 Comm: 202-755-9185	ANPRM: 42FR22332 (5/2/77) NPRM: 43FR58946 (12/18/78) FR(Phase I): 45FR33154(5/19/80) FR(Phase II): 11/80
Guidelines for Federal Procurement Practices (SAN No. 1200, Docket No. 6002(e)	A. Description: These guidelines are to help Federal agencies ensure procured products contain as much recycled material as possible. Section 6002(e) of RCRA directs EPA to prepare these guidelines to help maximize the energy and materials that the Federal Government recovers from solid waste. These guidelines will cover regulations for three different recycled materials—fly ash in cement and concrete, composed sewage sludge, and recycled paper products. B. Classification: Routine. C. Statutory Authority: RCRA 6002(e); 42 USC 6962 (e) D. CFR Change: 40 CFR 249.	John Heffelfinger EPA (WH-565) Washington, DC 20460 FTS: 8-755-9206 Comm: 202-755-9206	NPRM (Fly Ash): July 80 NPRM (Sewage): Late 80 NPRM (Paper): Early 81

SIGNIFICANT EPA REGULATIONS UNDER CONSIDERATION—Continued

Title	Summary	Contact	Timetable
	TOXIC SUBSTANCES		
EPA is writing regulations under four sections of the Toxic Substances Control Act (TSCA): under Section 4, standards for the development of test data and rules that require the testing of specific chemical substances and mixtures; under Section 5, premanufacture notification rules and premanufacture testing guidance; a series of specific control actions under Section 6, including chemical hazard labeling warnings; and under Section 8, reporting and recordkeeping requirements.			
Health Test Standards for Chemical Substances and Mixtures (SAN No. 1130)	A. Description: This regulation establishes general provisions and requirements for testing. It covers the scope, purpose, authority, and applicability of testing requirements. It offers appropriate definitions, and it deals with confidentiality, public access to information, compliance and revision, and modification of test standards. B. Classification: Major. C. Statutory Authority: TSCA 4, 15 USC 2603. D. CFR Change: 40 CFR 770.	Sarah Robinson EPA (TS-792) Washington, DC 20460 FTS. 8-755-4894 Comm. 202-755-4894	NPRM: 44FR27334 (5/9/79) FR: 11/80
• *Test Rules for Chemical Substances and Mixtures — Chloromethane and Chlorinated Benzenes* (SAN No 1131)	A. Description: This regulation will require specific chemical substances and mixtures (both individually and by chemical category), to be tested for specified health and environmental effects B. Classification: Major. C. Statutory Authority TSCA 4, 15 USC 2603 D. CFR Change: 40 CFR 771. E. Analysis: Reg. Analysis	Sarah Robinson EPA (TS-792) Washington, DC 20460 FTS 8-755-4894 Comm 202-755-4894	NPRM: 6/80
Standards for Development of Chronic Health Effects Data (SAN No 1132)	A. Description: This regulation sets standards for (1) testing for oncogenic and non-oncogenic chronic effects and (2) good laboratory practices (GLP) for health effects testing. The chemical specific test rules will refer to these standards. B Classification Major C. Statutory Authority TSCA 4, 15 USC 2603 D. CFR Change: 40 CFR 772	Sarah Robinson EPA (TS-792) Washington, DC 20460 FTS 8-755-4894 Comm 202-755-4894	NPRM: 44FR27334 (5/9/79) FR. 11/80
Standards For Development of Test Data (SAN No 1461)	A. Description: This regulation sets standards for tests to determine health effects The effects covered include acute and sub-chronic toxicity, mutagenicity, teratogenicity, and reproduction effects. The chemical specific test rules will refer to these standards. B. Classification Routine C. Statutory Authority TSCA 4, 15 USC 2603 D CFR Change: 40 CFR 772	Sarah Robinson EPA (TS-792) Washington, DC 20460 FTS 8-755-4894 Comm 202-755-4894	NPRM. 44FR44054 (7/26/79) FR: 11/80
Standards for Development of Test Data (SAN No 1462)	A Description. This regulation will set standards for tests to determine physical and chemical properties, environmental fate, and ecological effects. The chemical specific test rules will refer to these standards. B. Classification Routine C. Statutory Authority TSCA 4; 15 USC 2603. D. CFR Change: 40 CFR 772.	Sarah Robinson EPA (TS-792) Washington, DC FTS. 8-755-4894 Comm. 202-755-4894	NPRM: 6/80
• *Premanufacture Notification Requirements and Review Procedures* (SAN No. 1134)	A. Description: This regulation establishes procedures for chemical manufacturers to submit notices to EPA prior to manufacturing new chemical substances for commercial purposes The regulation also includes notice forms which stipulate the data that manufacturers must submit and the format for their submissions. B. Classification: Major. C. Statutory Authority: TSCA 5; 15 USC 2604 D. CFR Change: 40 CFR 720. E. Analysis: Reg. Analysis	Warren Muir EPA (TS-792) Washington, DC 20460 FTS 8-755-4894 Comm. 202-755-4894	NPRM: 44FR2242 (1/10/79) Interim policy: 44FR28564(5/15/79) RPRM: 44FR59764 (10/16/79) FR: Fall 1980

SIGNIFICANT EPA REGULATIONS UNDER CONSIDERATION—Continued

Title	Summary	Contact	Timetable
	TOXIC SUBSTANCES—Continued		
Asbestos-Containing Material in Schools (SAN No. 1519)	A. Description: An initial rule, probably interim final under the procedures in TSCA 6(d), will require schools to inspect and identify friable asbestos-containing materials. Subsequent regulations would require that removal measures be taken to protect school children and school employees from all unreasonable risks of exposure to asbestos. B. Classification: Major. C. Statutory Authority: TSCA 6; 15 USC 2605. D. CFR Change: 40 CFR 765	Larry Longanecker EPA (TS-794) Washington, DC 20460 FTS: 8-755-6660 Comm: 202-755-6660	ANPRM: 44FR54676 (9/20/79) IFR(Inspection) 6/80 NPRM(Removal): 11/80 FR(Removal): 5/81
Asbestos-Containing Materials in Commercial Buildings and Commercial Vessels (SAN No. 1550)	A. Description: This regulation will reduce/eliminate unreasonable risks of exposure to asbestos in commercial vessels and commercial buildings. A risk assessment study is due for completion in September 1980. B. Classification: Major. C. Statutory Authority: TSCA 6; 15 USC 2605 D. CFR Change: EPA will later assign a CFR Part Number to this regulation. E. Analysis: Reg. Analysis	Larry Longanecker EPA (TS-794) Washington, DC 20460 FTS 8-755-6660 Comm: 202-755-6660	ANPRM: 4/81 NPRM: 8/82
• *Rules Restricting the Commercial and Industrial Use of Asbestos Fibers* (SAN No. 1627)	A. Description: The Agency is investigating regulation of the commercial and industrial use of asbestos. Among the options under consideration are: (1) prohibiting the non-essential uses of asbestor; (2) establishing quotas for the use of asbestos; and (3) requiring the labeling of asbestos and asbestos-containing products. B. Classification: Major C. Statutory Authority: TSCA6; 15 USC 2605 D. CFR Change: 40 CFR 763 E. Analysis: Reg. Analysis	Richard Guimond EPA (TS-794) Washington, D.C. 20460 FTS: 8-755-8023 Comm: 202-755-8023	ANPRM: 44FR60056 (10/17/79) NPRM: 12/80
• *Chemical Hazard Warning Labels* (SAN No. 1530)	A. Description: Two concurrent rules, separately addressing acute and cancer hazards, would require chemical manufacturers to affix warning labels to containers they distribute in commerce. The warning labels would inform industrial users of hazardous chemical substances and mixtures about health and safety hazards. The primary purpose is to assure that workers know: (1) the recognized hazards, (2) the measures that should be taken to avoid or control exposure, and (3) the steps to be taken if exposure occurs. B. Classification: Major. C. Statutory Authority: TSCA 6(a)(3); 15 USC 2605(a)(3). D. CFR Change: 40 CFR 765. E. Analysis: REG. ANALYSIS.	Irwin L. Auerbach EPA (TS-794) Washington, DC 20460 FTS: 8-755-8963 Comm: 202-755-8963	NPRM: 7/80 FR: 7/81
Follow-up of New Chemical Substances (SAN No. 1531)	A. Description: This rule will establish procedures and data reporting requirements to be used in issuing significant new use rules and follow-up reporting rules related to new chemical substances. B. Classification: Major. C. Statutory Authority: TSCA 8, 5(a)(2); 15 USC 2607, 2604(a)(2). D. CFR Change: EPA will later assign a CFR Part Number to this regulation.	Warren Muir EPA (TS-794) Washington, DC 20460 FTS: 8-755-4894 Comm: 202-755-4894	ANPRM: 6/80 NPRM: 12/80 FR: Summer 1981

SIGNIFICANT EPA REGULATIONS UNDER CONSIDERATION—Continued

Title	Summary	Contact	Timetable
	TOXIC SUBSTANCES—Continued		
Preliminary Assessment Information (SAN No. 1137, Docket No. OTS-082004)	A. Description: This rule is the first in a series of reporting regulations designed to obtain information for pre-regulatory assessment on toxic substances. The rule would apply to manufacturers of 2300 chemicals, requiring them to fill out a short form on general production, use and exposure for the chemicals. Additional chemicals will be subject to this rule in later amendments. More detailed information will be the subject of separate section 8(a) rules. B. Classification: Routine C. Statutory Authority: TSCA 8(a), 15 USC 2607(a) D. CFR Change: 40 CFR 712.	Jeanette Wiltse EPA (TS-793) Washington, DC 20460 FTS 8-426-2632 Comm 202-426-2632	ANPRM: 44FR37517 (6/27/79) NPRM: 45FR13646 (2/29/80) FR: 11/80
General Assessment Information-Reporting 8 (a) - (SAN No. 1551)	A. Description: This rule will require chemical manufacturers and processors to supply information on their products—including exposures, by-products, and toxicity. EPA and other agencies will use the information to identify chemicals for possible regulation. B. Classification: Routine C. Statutory Authority: TSCA 8(a), 15 USC 2607(a) D. CFR Change: 40 CFR 712	Jeanette Wiltse EPA (TS-793) Washington, DC 20460 FTS 8-426-2632 Comm 202-426-2632	ANPRM: 6/80 NPRM: 7/81 FR: 12/81
Detailed Assessment Information Reporting 8(a) (SAN No. 1553)	A. Description: This is the third in a series of reporting regulations to obtain pre-regulatory assessment information. This rule will help provide detailed information on chemicals for which regulatory controls are being developed. The rule will apply to chemical manufacturers and processors. B. Classification: Routine. C. Statutory Authority: TSCA 8(a); 15 USC 2607(a). D. CFR Change: 40 CFR 712(D).	Jeanette Wiltse EPA (TS-793) Washington, DC 20460 FTS 8-426-2632 Comm 202-426-2632	ANPRM: 6/80 NPRM: 4/81 FR: 10/81
Standards for Excluding Small Manufacturers and Processors from TSCA 8(a) (SAN No. 1529)	A. Description: This rule will establish a general standard which the Administrator can use under most section 8(a) rules to specify which manufacturers qualify as "small" for the purpose of exemptions. B. Classification: Routine C. Statutory Authority: TSCA 8(a), 15 USC 2607(a) D. CFR Change: 40 CFR 712.	Jeanette Wiltse EPA (TS-793) Washington, DC 20460 FTS: 8-426-2632 Comm 202-426-2632	ANPRM: 7/80
Asbestos Use and Substitutes Reporting (SAN No. 1552)	A. Description: This rule will use the reporting authority of section 8(a) to obtain information on the industrial and commercial uses of asbestos fiber. EPA will use this information to support regulation of asbestos under TSCA section 6. B. Classification: Routine. C. Statutory Authority: TSCA 8(a), 15 USC 2607(a) D. CFR Change: 40 CFR 763.	Jeanette Wiltse EPA (TS-793) Washington, DC 20460 FTS 8-426-2632 Comm 202-426-2632	ANPRM: 44FR60061 (10/17/79) NPRM: 7/80 FR: 1/81
Records and Reports of Allegations of Significant Adverse Reactions to Health or the Environment (SAN No. 1138, Docket No. OPTS-083001)	A. Description: This regulation will establish procedures for recording and reporting allegations of adverse reactions to health or the environment. B. Classification: Routine. C. Statutory Authority: TSCA 8(c), 15 USC 2607(c) D. CFR Change: 40 CFR 717.	Jeanette Wiltse EPA (TS-793) Washington, DC 20460 FTS 8-426-2632 Comm 202-426-2632	ANPRM: 42FR56686 (3/11/77) NPRM: 5/80 FR: 12/80

SIGNIFICANT EPA REGULATIONS UNDER CONSIDERATION—Continued

Title	Summary	Contact	Timetable
	TOXIC SUBSTANCES—Continued		
Health and Safety Data Reporting (SAN No. 1139; Docket No. OTS-084003)	A. Description: This rule would require chemical manufacturers, processors, distributors, and others who possess health and safety studies on specifically listed chemicals to submit them to EPA. EPA will use these studies to assess the health and environmental effects of the chemicals and to determine what kind of testing rules the agency should promulgate under section 4(a) of TSCA. EPA will amend this rule from time to time by adding to the list of chemicals subject to this rule. B. Classification: Routine. C. Statutory Authority: TSCA 8(d); 15 USC 2607(d). D. CFR Change: 40 CFR 716.	Jeanette Wiltse EPA (TS-793) Washington, DC 20460 FTS: 8-426-2632 Comm: 202-426-2632	NPRM: 44FR77470 (12/31/79) FR: 9/80
Exports of Toxic Substances; Notification of Export Under Section 12(b) (SAN No. 1624)	A. Description: This rule will establish procedures for notices of export of chemicals subject to certain TSCA section 4, 5, 6, or 7 actions. B. Classification: Routine. C. Statutory Authority: TSCA 12(b), 15 USC 2611(b). D. CFR Change: 40 CFR 707	Suzanne Rudzinski EPA (TS-793) Washington, D.C. 20460 FTS: 8-755-5851 Comm: 202-755-5851	NPRM: 44FR56856 (10/2/79) FR: 7/80

WATER QUALITY

The goal of the Clean Water Act is to achieve fishable and swimmable water quality in the Nation's waters by 1983. The Act defines two major strategies for reaching this goal: 1) limitations on effluent discharges from industrial and municipal sources and 2) adoption by the States of water quality standards for specific bodies of water. EPA is presently working on regulations which involve both strategies. Under Sections 301, 304, 306, and 307 of the Act, the Agency is developing regulations to control the discharge of toxic and other substances from different industries. Under Sections 303 and 304, the Agency is revising the program under which States adopt water quality standards.

In addition, the Act requires that EPA address spills of oil and hazardous substances under Section 311, that it develop guidelines for permissable dumping of dredged and fill material under Section 404, and that it develop guidelines for land disposal of sewage sludge under Section 405.

Section 402 requires dischargers to apply for permits from the State or EPA before they can discharge pollutants. EPA has set up the National Pollutant Discharge Elimination System (NPDES) in order to fulfill this requirement. NPDES permits are the main enforcement mechanism provided for in the Act.

The basic structure of the Act was created by the Federal Water Pollution Control Act of 1972. The 1977 amendments changed the name to the Clean Water Act and supplied the impetus for most of the regulations now under development.

Statewide 208 Dredged or Fill Regulatory Programs (SAN No. 1401)	A. Description: This regulation will allow states to control certain minor discharges of dredged and fill material through Best Management Practices (BMP) under a statewide 208 regulatory program rather than through State 404 programs. B. Classification: Routine. C. Statutory Authority: CWA 208(b)(4); 33 USC 1288 (b)(4) D. CFR Change: Addition to 40 CFR 35.1500.	David Ziegler EPA (WH-554) Washington, DC 20460 FTS: 8-426-2474 Comm: 202-426-2474	NPRM: 10/80
Requirements for Application for 301(c) Variances (SAN No. 1404)	A. Description: Section 301(c) of the Clean Water Act provides for waivers on economic grounds of the strict requirements of BAT controls for non-toxic, non-conventional pollutants. This regulation will establish application ground rules and national criteria for granting variances from BAT requirements: B. Classification: Routine C. Statutory Authority: CWA 301(i)(B); 33 USC 1311(i)(B) D. CFR Change: Addition to 40 CFR 125.	Ed Kramer EPA (EN-336) Washington, DC 20460 FTS: 8-755-0750 Comm: 202-755-0750	NPRM: 12/80 FR: 8/81

SIGNIFICANT EPA REGULATIONS UNDER CONSIDERATION—Continued

Title	Summary	Contact	Timetable
	WATER QUALITY—Continued		
Innovative Technology for Industrial Discharge (SAN No. 1608)	A. Description: Section 301(k) of the Clean Water Act allows NPDES permit applicants to request an extension until July 1, 1987 of the compliance date for BAT if they can demonstrate that they are developing an innovative technology. This technology must either (1) be superior to BAT or (2) be equivalent to BAT and allow significant cost savings. This regulation will implement Section 301(k). B. Classification: Routine C. Statutory Authority: CWA 301(k); 33 USC 1311(k) D. CFR Change: Addition to 40 CFR 125.	Tom Laverty EPA (EN-336) Washington, DC 20460 FTS: 8-426-7010 Comm: 202-426-7010	ANPRM: 7/80

The Clean Water Act and a modified consent decree in *NRDC v. Costle*, 12 ERC 1833(D D C. 1979), require that EPA develop guidelines to control toxic substances in industrial effluents. Section 307(a) of the Act identifies 65 toxic pollutants, they are listed in Table 1 of Committee Print 95-30 of the Committee on Public Works and Transportation, House of Representatives

Section 304 requires that EPA determine the best available technology (BAT) to control toxic pollutants from existing point sources. BAT will consist of the most effective technology which can still be economically achieved by the affected industries. EPA will also determine best conventional technology (BCT) which industries can use on conventional pollutants which do not require BAT

Under Section 306 of the Act, EPA is establishing new source performance standards (NSPS) for new plants. Under Section 307(b) and 307(c), EPA will set pretreatment standards for both existing and new sources which discharge into municipal waste treatment systems. These sets of standards will in most cases require technologies equivalent to BAT.

Major issues raised in setting effluent guidelines are:

(1) Identification of the major pollutants discharged to and from treatment systems,

(2) Determination of the major technology options to control these pollutants,

(3) Determination of the capital and annual costs of the technology options, and

(4) Determination of the resulting economic impacts.

EPA is developing guidelines for each of the industries listed below.

• *Iron and Steel Manufacturing* (SAN No. 1405)	A. Classification: Major. B. Statutory Authority: CWA 301, 304, 306, 307, 501; 33 USC 1311, 1314, 1316, 1317, 1361 C. CFR Change: Revision to 40 CFR 420 D. Analysis: Reg. Analysis	Edward Dulaney EPA (WH-552) Washington, DC 20460 FTS 8-426-2586 Comm. 202-426-2586	NPRM: 12/80 FR: 6/81
Petroleum Refining Point Source Category (SAN No. 1406)	A. Classification: Routine. B. Statutory Authority: CWA 301, 304, 306, 307, 501; 33 USC 1311, 1314, 1316, 1317, 1361 C. CFR Change: Revision to 40 CFR 419.	John Lum EPA (WH-522) Washington, DC 20460 FTS. 8-426-4617 Comm. 207-426-4617	NPRM: 44FR75926 (12/21/79) FR: 3/81
Timber Products Processing (SAN No. 1407)	A. Classification: Routine. B. Statutory Authority: CWA 301, 304, 306, 307, 501; 33 USC 1311, 1314, 1316, 1317, 1361 C. CFR Change: Revision to 40 CFR 429	Richard E. Williams EPA (WH-552) Washington, DC 20460 FTS: 8-426-2554 Comm: 202-426-2554	NPRM: 44FR62810 (10/31/79) FR: 10/80
• *Steam Electric Power Generating Point Source Category* (SAN No. 1408)	A. Classification. Major. B. Statutory Authority: CWA 301, 304, 306, 307, 501; 33 USC 1311, 1314, 1316, 1317, 1361 C. CFR Change: Revision to 40 CFR 423. D. Analysis: REG. ANALYSIS.	John Lum EPA (WH-552) Washington, DC 20460 FTS: 8-426-4617 Comm. 202-426-4617	NPRM: 7/80 FR: 3/81
Leather Tanning and Finishing (SAN No. 1409)	A. Classification: Routine. B. Statutory Authority: CWA 301, 304, 306, 307, 501; 33 USC 1311, 1314, 1316, 1317, 1361 C. CFR Change: Revision to 40 CFR 425.	Donald F. Anderson EPA (WH-552) Washington, DC 20460 FTS: 8-426-2707 Comm 202-426-2707	NPRM: 44FR38746 (7/2/79) FR: 2/81
Nonferrous Metals Manufacturing (SAN No. 1410)	A. Classification: Major. B. Statutory Authority: CWA 301, 304, 306, 307, 501; 33 USC 1311, 1314, 1316, 1317, 1361 C. CFR Change: Revision to 40 CFR 421.	Patricia Williams EPA (WH-552) Washington, DC 20460 FTS: 8-426-2586 Comm. 202-426-2586	NPRM: 5/81 FR: 12/81

SIGNIFICANT EPA REGULATIONS UNDER CONSIDERATION—Continued

Title	Summary	Contact	Timetable
	WATER QUALITY—Continued		
Paint Formulation (SAN No. 1411)	A. Classification: Routine. B. Statutory Authority: CWA 301, 304, 306, 307, 501; 33 USC 1311, 1314, 1316, 1317, 1361 C. CFR Change: Revision to 40 CFR 446.	James Berlow EPA (WH-552) Washington, DC 20460 FTS: 8-426-2554 Comm: 202-426-2554	NPRM: 45FR912 (1/3/80) FR: 4/81
Ink Formulation (SAN No. 1411A)	A. Classification: Routine. B. Statutory Authority: CWA 301, 304, 306, 307, 501; 33 USC 1311, 1314, 1316, 1317, 1361 C. CFR Change: Revision to 40 CFR 447.	James Berlow EPA (WH-552) Washington, DC 20460 FTS: 8-426-2554 Comm: 202-426-2554	NPRM: 45FR928 (1/3/80) FR: 4/81
Ore Mining and Dressing Point Source Category (SAN No. 1413)	A. Classification: Routine. B. Statutory Authority: CWA 301, 304, 306, 307, 501; 33 USC 1311, 1314, 1316, 1317, 1361 C. CFR Change: Revision to 40 CFR 440.	B. Matthew Jarrett EPA (WH-552) Washington, DC 20460 FTS: 8-426-2707 Comm: 202-426-2707	NPRM: 10/80 FR: 7/81
Coal Mining Point Source Category (SAN No. 1414)	A. Classification: Routine. B. Statutory Authority: CWA 301, 304, 306, 307, 501; 33 USC 1311, 1314, 1316, 1317, 1361 C. CFR Change: Revision to 40 CFR 434.	Dennis Rudy EPA (WH-552) Washington, DC 20460 FTS: 8-426-2707 Comm: 202-426-2707	NPRM: 10/80 FR: 4/81
Organic Chemicals (SAN No. 1415)	A. Classification: Major. B. Statutory Authority: CWA 301, 304, 306, 307, 501; 33 USC 1311, 1314, 1316, 1317, 1361 C. CFR Change: Revision to 40 CFR 414. D. Analysis: UCIA.	Maria M. Irizarry EPA (WH-552) Washington, DC 20460 FTS: 8-426-2497 Comm: 202-426-2497	NPRM: 6/81 Final: 5/82
Inorganic Chemicals Manufacturing Point Source Category (SAN No. 1416)	A. Classification: Major. B. Statutory Authority: CWA 301, 304, 306, 307, 501; 33 USC 1311, 1314, 1316, 1317, 1361 C. CFR Change: Revision to 40 CFR 415.	Elwood Martin EPA (WH-552) Washington, DC. 20460 FTS: 8-426-2582 Comm: 202-426-2582	NPRM: 7/80 FR: 2/81
Textile Mills (SAN No. 1417)	A. Classification: Routine. B. Statutory Authority: CWA 301, 304, 306, 307, 501; 33 USC 1311, 1314, 1316, 1317, 1361 C. CFR Change: Revision to 40 CFR 410.	James Berlow EPA (WH-552) Washington, DC 20460 FTS: 8-426-2554 Comm: 202-426-2554	NPRM: 44FR62204 (10/29/79) FR: 4/81
Plastics & Synthetics (SAN No. 1418)	A. Classification: Major. B. Statutory Authority: CWA 301, 304, 306, 307, 501; 33 USC 1311, 1314, 1316, 1317, 1361 C. CFR Change: Revision to 40 CFR 416.	H. E. Wise EPA (WH-552) Washington, DC 20460 FTS: 8-426-2497 Comm: 202-426-2497	NPRM: 6/81 FR: 5/82
• *Pulp, Paper, and Paperboard* (SAN No. 1419)	A. Classification: Major. B. Statutory Authority: CWA 301, 304, 306, 307, 501; 33 USC 1311, 1314, 1316, 1317, 1361 C. CFR Change: Revision to 40 CFR 430. D. Analysis: REG. ANALYSIS.	Robert Dellinger EPA (WH-552) Washington, DC 20460 FTS: 8-426-2554 Comm: 202-426-2554	NPRM: 9/80 FR: 6/81
Rubber Processing (SAN No. 1420)	A. Classification: Routine B. Statutory Authority: CWA 301, 304, 306, 307, 501; 33 USC 1311, 1314, 1316, 1317, 1361 C. CFR Change: Revision to 40 CFR 428.	J. S. Vitalis EPA (WH-552) Washington, DC 20460 FTS: 8-426-2497 Comm: 202-426-2497	NPRM: 44FR75016 (12/18/79) Final: 11/80
Soap and Detergents Manufacturing (SIC 2841) (SAN No. 1421)	A. Classification: Routine. B. Statutory Authority: CWA 301, 304, 306, 307, 501; 33 USC 1311, 1314, 1316, 1317, 1361 C. CFR Change: Revision to 40 CFR 417.	E. H. Forsht EPA (WH-552) Washington, DC 20460 FTS: 8-426-2497 Comm: 202-426-2497	NOTICE: 11/80

SIGNIFICANT EPA REGULATIONS UNDER CONSIDERATION—Continued

Title	Summary	Contact	Timetable
	WATER QUALITY—Continued		
Auto and Other Laundries (SAN No. 1422)	A. Classification: Routine. B. Statutory Authority: CWA 301, 304, 306, 307, 501; 33 USC 1311, 1314, 1316, 1317, 1361 C. CFR Change: 40 CFR 444.	Elwood Martin EPA (WH-552) Washington, DC 20460 FTS: 8-426-2582 Comm: 202-426-2582	NPRM: 1/81 FR: 8/81
Miscellaneous Chemicals: Adhesives and Sealants (SAN No. 1423)	A. Classification: Routine. B. Statutory Authority: CWA 301, 304, 306, 307, 501; 33 USC 1311, 1314, 1316, 1317, 1361. C. CFR Change: 40 CFR 456.	E. H. Forsht EPA (WH-552) Washington, DC 20460 FTS: 8-426-2497 Comm: 202-426-2497	Notice: 2/81
Miscellaneous Chemicals: Explosives Manufacturing (SAN No. 1424)	A. Classification: Routine. B. Statutory Authority: CWA 301, 304, 306, 307, 501; 33 USC 1311, 1314, 1316, 1317, 1361 C. CFR Change: 40 CFR 457.	Elwood Martin EPA (WH-552) Washington, DC 20460 FTS: 8-426-2582 Comm: 202-426-2582	NPRM: 1/81 FR: 8/81
Miscellaneous Chemicals: Gum and Wood (SAN No. 1425)	A. Classification: Routine. B. Statutory Authority: CWA 301, 304, 306, 307, 501; 33 USC 1311, 1314, 1316, 1317, 1361 C. CFR Change: 40 CFR 454.7.	Arthur Shattuck EPA (WH-552) Washington, DC 20460 FTS: 8-426-2707 Comm: 202-426-2707	NPRM: 44FR68710 (11/29/79) FR: 10/80
Miscellaneous Chemicals: Pesticides (SAN No. 1426)	A. Classification: Routine. B. Statutory Authority: CWA 301, 304, 306, 307, 501; 33 USC 1311, 1314, 1316, 1317, 1361 C. CFR Change: 40 CFR 455	George Jett EPA (WH-552) Washington, DC 20460 FTS: 8-426-2497 Comm: 202-426-2497	NPRM: 1/81 FR: 10/81
Miscellaneous Chemicals: Pharmaceuticals (SAN No. 1427)	A. Classification: Routine. B. Statutory Authority: CWA 301, 304, 306, 307, 501; 33 USC 1311, 1314, 1316, 1317, 1361 C. CFR Change: 40 CFR 439.	Joe Vitalis EPA (WH-552) Washington, DC 20460 FTS: 8-426-2497 Comm: 202-426-2497	ANPRM: 45FR16851 (3/14/80) NPRM: 1/81 FR: 8/81
Electroplating (SAN No. 1428)	A. Classification: Major. B. Statutory Authority: CWA 301, 304, 306, 307, 501; 33 USC 1311, 1314, 1316, 1317, 1361 C. CFR Change: 40 CFR 413. D. Analysis: UCIA.	Dwight Hlustik EPA (WH-552) Washington, DC 20460 FTS: 8-426-2582 Comm. 202-426-2582	NPRM: 4/81 FR: 11/81
Photographics (SAN No. 1429)	A. Classification: Routine. B. Statutory Authority: CWA 301, 304, 306, 307, 501; 33 USC 1311, 1314, 1316, 1317, 1361 C. CFR Change: 40 CFR 459.	John Newborough EPA (WH-552) Washington, DC 55460 FTS: 8-426-2582 Comm: 202-426-2582	NPRM: 1/81 FR: 8/81
Mechanical Products (SAN No. 1430)	A. Classification: Routine. B. Statutory Authority: CWA 301, 304, 306, 307, 501; 33 USC 1311, 1314, 1316, 1317, 1361 C. CFR Change: 40 CFR 433.	Dwight Hlustik EPA (WH-552) Washington, DC FTS: 8-426-2582 Comm: 202-426-2582	NPRM: 4/81 FR: 11/81
Electrical & Electronic Products (SAN No. 1431)	A. Classification: Routine. B. Statutory Authority: CWA 301, 304, 306, 307, 33 USC 1311, 1314, 1316, 1317. C. CFR Change: 40 CFR 469.	Frank Hurd EPA (WH-552) Washington, DC 20460 FTS: 8-426-2582 Comm: 202-426-2582	NPRM: 4/81 FR: 11/81
Metal Moulding and Casting Foundries (SAN No. 1432)	A. Classification: Major. B. Statutory Authority: CWA 301, 304, 306, 307, 501; 33 USC 1311, 1314, 1316, 1317, 1361 C. CFR Change: 40 CFR 464.	John Williams EPA (WH-552) Washington, DC 20460 FTS: 8-426-2586 Comm: 202-426-2586	NPRM: 12/80 FR: 7/81

SIGNIFICANT EPA REGULATIONS UNDER CONSIDERATION—Continued

Title	Summary	Contact	Timetable
	WATER QUALITY—Continued		
Copper Forming (SAN No. 1433)	A. Classification: Routine. B. Statutory Authority: CWA 301, 304, 306, 307, 501; 33 USC 1311, 1314, 1316, 1317, 1361 C. CFR Change: 40 CFR 468.	John Williams EPA (WH-552) Washington, DC 20460 FTS: 8-426-2586 Comm: 202-426-2586	NPRM: 2/81 FR: 9/81
Battery Manufacturing (SAN No. 1434)	A. Classification: Routine. B. Statutory Authority: CWA 301, 304, 306, 307, 501; 33 USC 1311, 1314, 1316, 1317, 1361. C. CFR Change: 40 CFR 461.	Mary Belefski EPA (WH-552) Washington, DC 20460 FTS: 8-426-2586 Comm: 202-426-2586	NPRM: 12/80 FR: 7/81
Coil Coating (SAN No. 1435)	A. Classification: Routine. B. Statutory Authority: CWA 301, 304, 306, 307, 501; 33 USC 1311, 1314, 1316, 1317, 1361 C. CFR Change: 40 CFR 465.	Rex Reges EPA (WH-552) Washington, DC 20460 FTS: 8-426-2586 Comm: 202-426-2586	NPRM: 9/80 FR: 4/81
Plastics Molding and Forming (SAN No. 1436)	A. Classification: Routine. B. Statutory Authority: CWA 301, 304, 306, 307, 501; 33 USC 1311, 1314, 1316, 1317, 1361 C. CFR Change: 40 CFR 463.	Robert W. Hardy EPA (WH-552) Washington, DC 20460 FTS: 8-426-2586 Comm: 202-426-2586	NPRM: 8/81 FR: 3/82
Porcelain Enameling (SAN No. 1437)	A. Classification: Routine. B. Statutory Authority: CWA 301, 304, 306, 307, 501; 33 USC 1311, 1314, 1316, 1317, 1361. C. CFR Change: 40 CFR 466.	Catherine M. Lowry EPA (WH-552) Washington, DC 20460 FTS: 8-426-2586 Comm: 202-426-2586	NPRM: 10/80 FR: 5/81
Aluminum Forming (SAN No. 1438)	A. Classification: Routine B. Statutory Authority: CWA 301, 304, 306, 307, 501; 33 USC 1311, 1314, 1316, 1317, 1361 C. CFR Change: 40 CFR 467.	Janet Goodwin EPA (WH-552) Washington, DC 20460 FTS: 8-426-2586 Comm: 202-426-2586	NPRM: 3/81 FR: 9/81
Nonferrous Metals Forming (SAN No. 1568)	A. Classification: Routine. B. Statutory Authority: CWA 301, 304, 306, 307, 501; 33 USC 1311, 1314, 1316, 1317, 1361 C. CFR Change: 40 CFR 471.	Patricia Williams EPA (WH-552) Washington, DC 20460 FTS: 8-426-2586 Comm: 202-426-2586	NPRM: 11/82 FR: 6/83
Fruits and Vegetables (SAN No. 1569)	A. Classification: Routine B. Statutory Authority: CWA 301, 304, 306, 307, 501; 33 USC 1311, 1314, 1316, 1317, 1361 C. CFR Change: Revisions to 40 CFR 407.	Gary Kasaoka EPA (WH-552) Washington, DC 20460 FTS: 8-426-2707 Comm: 202-426-2707	NPRM: 3/81 FR: 10/81
Poultry (SAN No. 1602)	A. Classification: Routine B. Statutory Authority: CWA 301, 304, 306, 307, 501; 33 USC 1311, 1314, 1316, 1317, 1361 C. CFR Change: Revisions to 40 CFR 432.	Arthur Shattuck EPA (WH-552) Washington, DC 20460 FTS: 8-426-2707 Comm: 202-426-2707	NPRM: 9/81
Beverages (SAN No. 1603)	A. Classification: Routine B. Statutory Authority: CWA 301, 304, 306, 307, 501; 33 USC 1311, 1314, 1316, 1317, 1361 C. CFR Change: Additions to 40 CFR 438.	Arthur Shattuck EPA (WH-552) Washington, DC 20460 FTS: 8-426-2707 Comm: 202-426-2707	NPRM: 9/81
Edible Oils (SAN No. 1572)	A. Classification: Routine. B. Statutory Authority: CWA 301, 304, 306, 307, 501; 33 USC 1311, 1314, 1316, 1317, 1361 C. CFR Change: Additions to 40 CFR 462.	Arthur Shattuck EPA (WH-552) Washington, DC 20460 FTS: 8-426-2707 Comm: 202-426-2707	NPRM: 9/81

SIGNIFICANT EPA REGULATIONS UNDER CONSIDERATION—Continued

Title	Summary	Contact	Timetable
	WATER QUALITY—Continued		
Dairy (SAN No. 1573)	A. Classification. Routine B. Statutory Authority. CWA 301, 304, 306, 307, 316; 33 USC 1311, 1314, 1316, 1317, 1326 C. CFR Change: Revisions to 40 CFR 405.	Mark L. Mjoness EPA (WH-552) Washington, DC 20460 FTS: 8-426-2554 Comm: 202-426-2554	NPRM: 3/81 FR: 10/81
Meat Packing (SAN No. 1574)	A. Classification: Routine. B. Statutory Authority: CWA 301, 304, 306, 307, 316; 33 USC 1311, 1314, 1316, 1317, 1326 C. CFR Change: Revision to 40 CFR 432.	Cal Dysinger EPA (WH-552) Washington, DC 20460 FTS: 8-426-2707 Comm: 202-426-2707	NPRM: Fall 1980 FR: Spring 1981
Beet Sugar Processing (SAN No. 1575)	A. Classification: Routine B. Statutory Authority: CWA 301, 304, 306, 307, 316; 33 USC 1311, 1314, 1316, 1317, 1326 C. CFR Change: Revision to 40 CFR 409.	Mark L. Mjoness EPA (WH-552) Washington, DC 20460 FTS 8-426-2554 Comm: 202-426-2554	NPRM: Fall 1981
Grain Mills (SAN No. 1576)	A. Classification: Routine B. Statutory Authority: CWA 301, 304, 306, 307, 316; 33 USC 1311, 1314, 1316, 1317, 1326 C. CFR Change: Revision to 40 CFR 406.	Mark L. Mjoness EPA (WH-552) Washington, DC 20460 FTS: 8-426-2554 Comm: 202-426-2554	NPRM: 9/80
Cane Sugar Refining (SAN No. 1577)	A. Classification: Routine. B. Statutory Authority: CWA 301, 304, 306, 307, 316; 33 USC 1311, 1314, 1316, 1317, 1326 C. CFR Change: Revisions to 40 CFR 409.	Mark L. Mjoness EPA (WH-552) Washington, DC 20460 FTS. 8-426-2554 Comm 202-426-2554	NPRM: 3/81 FR: 10/81
Seafood Processing (SAN NO. 1625)	A. Classification: Routine B. Statutory Authority: CWA 301, 304, 306, 307; 33 USC 1311, 1314, 1316, 1317 C. CFR Change: Revision to 40 CFR 408	Cal Dysinger EPA (WH-552) Washington, D C. 20460 FTS 8-426-2707 Comm 202-426-2707	NPRM: 11/80
Modified pH Standard for Effluent Guideline Limitations (SAN No. 1629)	A. Description: This regulation would adjust effluent guideline limitations for pH to require less than 100% compliance of pH values on a monthly basis for industrial dischargers whose NPDES permits require continuous monitoring. It would also limit the duration of individual excursions. B. Classification: Routine C. Statutory Authority: CWA 301, 304; 33 USC 1311, 1314 D. CFR Change: Revision 40 CFR 401	Russell Roegner EPA (WH-586) Washington, D C 20460 FTS 8-755-3624 Comm 202-755-3624	NPRM: 10/80
Revision of Water Quality Standards Regulation (SAN No. 1441)	A. Description: This regulation may require States to adopt Water Quality Standards for some toxic pollutants covered by ambient water quality criteria. One effect of this will be that dischargers (both municipal and industrial) may have to install treatment technology beyond that required by Best Practical Wastewater Treatment Technology (BPWTT) or Best Available Technology (BAT) guidelines. B. Classification: Major. C. Statutory Authority: CWA 303, 33 USC 1313. D. CFR Change: 40 CFR 35 1550. E. Analysis: REG. ANALYSIS	David Sabock EPA (WH-585) Washington, DC 20460 FTS 8-245-3042 Comm 202-245-3042	ANPRM: 43FR29588 (7/10/78) NPRM: 9/80 Final: 5/81
Quality Criteria for Water: Volume II (SAN No. 1442)	A. Description: The consent decree in *NRDC v Train* requires that EPA establish ambient water quality criteria for 65 pollutants. The States will refer to this guidance when they establish water quality standards. This guidance is an important Agency decision. B. Classification: Guidance C. Statutory Authority: CWA 304; 33 USC 1314. D. CFR Change: This action will not be codified in CFR..	Frank Gostomski EPA (WH-585) Washington, DC FTS: 8-245-3042 Comm: 202-245-3042	NPRM(27): 44FR15926 (3/15/79) NPRM(26): 44FR43660 (7/25/79) NPRM(12): 44FR56628 (10/1/79) FR: 9/80

SIGNIFICANT EPA REGULATIONS UNDER CONSIDERATION—Continued

Title	Summary	Contact	Timetable
	WATER QUALITY—Continued		
Addition of Ammonia to Toxics List (SAN No. 1578)	A. Description: This action considers adding ammonia to the section 307(a) list of toxic pollutants. B. Classification: Routine. C. Statutory Authority: CWA 307(a); 33 USC 1317(a) D. CFR Change: This action will not be codified in CFR.	Frank Gostomski EPA (WH-585) Washington, DC 20460 FTS: 8-245-3042 Comm: 202-245-3042	NPRM: 45FR803 (1/3/80) FR: 9/80
Amendments to General Pretreatment Regulation (SAN No. 1502)	A. Description: These amendments, written under a settlement agreement with industry plaintiffs who sued EPA, clarify the existing General Pretreatment Regulation (43FR27736—June 26, 1978). B. Classification: Routine. C. Statutory Authority: CWA 307; 33 USC 1317 D. CFR Change: 40 CFR 403.	William R. Diamond EPA (EN-336) Washington, DC 20460 FTS: 8-755-0750 Comm: 202-755-0750	NPRM: 44FR62260 (10/29/79) NPRM: 45FR3063 (1/16/80) FR: 6/80
Biological Toxicity Testing Requirements in the NPDES Permits Program (SAN No. 1628)	A. Description: EPA is planning to require biological toxicity testing of primary industrial dischargers in the NPDES permits program after these industries have installed Best Available Technology (BAT) control equipment. The purpose of this requirement is to analyze the actual reduction of toxicity by BAT treatment systems and identify point sources where toxicity is still a concern. In cases where levels of toxicity are found after compliance with BAT limitations, toxicity reduction of those effluents will be pursued. B. Classification: Routine C. Statutory Authority: CWA 308, 402 (a)(1); 33 USC 1318,1342(a)(1). D. CFR Change: 40 CFR 125	William Brandes EPA (EN-336) Washington, D. C. 20460 FTS: 8-426-7035 Comm: 202-426-7035	ANPRM: 7/80
CWA 311 requires that EPA address the problem of spills of oil and hazardous substances by (1) identifying substances which are hazardous and establishing reporting requirements for spills of these substances, (2) setting liability limits for storage facilities, and (3) setting requirements for spill prevention plans.			
Reportable Quantities of Oil Discharge (SAN No. 1579)	A. Description: This revision will extend reporting requirements for oil discharges from 12 miles to 200 miles offshore and will provide for statutory exemptions. B. Classification: Routine. C. Statutory Authority: CWA 311(b); 33. USC 1321(b). D. CFR Change: Revision to 40 CFR 110.	Hans Crump-Wiesner EPA (WH-548) Washington, DC 20460 FTS: 8-245-3045 Comm: 202-245-3045	ANPRM: 12/80
Designation of Carcinogens as Hazardous Substances (SAN No. 1580)	A. Description: This regulation identifies substances which pose a threat of cancer to people who drink from water sources which contain discharges of hazardous substances. In conjunction with CFR Part 117, it makes possible prompt discovery and clean-up of discharges. This regulation is required by section 311. B. Classification: Routine. C. Statutory Authority: CWA 311(b)(2)(A); 33 USC 1321 (b)(2)(A) D. CFR Change: Addition to 40 CFR 116.	Joseph Lewis EPA (WH-585) Washington, DC 20460 FTS: 8-245-0581 Comm: 202-245-0581	ANPRM: 44FR10270 (2/16/79) NPRM: 6/80 FR: 12/80
Designation of Human Acute Toxicants as Hazardous Substances (SAN No. 1581)	A. Description: Section 311 requires the Agency to develop and if necessary amend regulations that identify hazardous substances which present imminent danger to human health when discharged into U.S. waters. Accordingly, this regulation amends CFR Part 116 by identifying additional toxic substances which pose a threat to people when discharged into drinking water sources. B. Classification: Routine. C. Statutory Authority: CWA 311(b)(2)(A); 33 USC 1321 (b)(2)(A). D. CFR Change: Additon to 40 CFR 116.	Joseph Lewis EPA (WH-585) Washington, DC 20460 FTS: 8-245-0581 Comm: 202-245-0581	FR: 43FR10474 (3/13/78) NPRM: 10/80 FR: 6/81

SIGNIFICANT EPA REGULATIONS UNDER CONSIDERATION—Continued

Title	Summary	Contact	Timetable
	WATER QUALITY—Continued		
Determination of Reportable Quantities for Carcinogenic Hazardous Substances (SAN No. 1582)	A. Description. This regulation provides the reporting requirements necessary under section 311 for substances designated in CFR Part 116 as hazardous. B. Classification. Routine C. Statutory Authority: CWA 311(b)(4); 33 USC 1321 (b)(4). D. CFR Change: Addition to 40 CFR 117.	Joseph Lewis EPA (WH-585) Washington, DC FTS 8-245-0581 Comm. 202-245-0581	ANPRM: 44FR10271 (2/16/79) NPRM: 6/80 FR: 12/80
Determination of Reportable Quantities for Human Acute Toxicants (SAN No. 1583)	A. Description: This regulation provides the reporting requirements necessary under section 311 for substances identified as hazardous in CFR Part 116. B. Classification: Routine. C. Statutory Authority: CWA 311(b)(4), 33 USC 1321(b)(4). D. CFR Change: Addition to 40 CFR 117.	Joseph Lewis EPA (WH-585) Washington, DC 20460 FTS 8-245-0581 Comm 202-245-0581	FR: 44FR50766 (8/29/79) NPRM: 10/80 FR: 6/81
Liability Limits for Small Onshore Hazardous Substances Storage Facilities.	A. Description: This action amends CFR Part 113 which sets liability limits for small onshore oil storage facilities by providing a similar limit for small hazardous substances storage facilities. It will set forth eligibility criteria for limitations of liability to less than $50 million. It should help small facilities to obtain liability insurance. B. Classification: Routine. C. Statutory Authority: CWA 311(f)(2), 33 USC 1321(f)(2) D. CFR Change: Addition to 40 CFR 113.	James Kohler EPA (WH-585) Washington, DC 20460 FTS 8-245-3036 Comm 202-245-3036	NPRM: 8/80 FR: 3/81
Hazardous Substances Pollution Prevention for Facilities Subject to Permitting Requirements of Section 402 (SAN No. 1451)	A. Description: This regulation's purpose is to prevent spills of hazardous substances. It sets forth requirements for the Spill Prevention Control and Countermeasure Plans for facilities which (a) are not related to transportation, and (b) which handle hazardous substances, and (c) are subject to NPDES permits. The Agency will set the date for the final rule when the Cost Impact Analysis is completed. B. Classification: Routine C. Statutory Authority: CWA 311(j)(1)(C), 33 USC 1321 (j)(1)(C). D. CFR Change: 40 CFR 151.	Thomas Charlton EPA (WH-548) Washington, DC FTS 8-245-3045 Comm 202-245-3045	NPRM: 43FR39276 (9/1/78)
Oil Pollution Prevention Regulation (SAN No. 1584)	A. Description: This revision to 40 CFR 112 will extend EPA's oil pollution authority from three miles to two hundred miles offshore. B. Classification: Routine C. Statutory Authority: CWA 311(j)(1)(C); 33 USC 1321(j)(1)(C) D. CFR Change: Revision to 40 CFR 112.	Thomas Charlton EPA (WH-548) Washington, DC 20460 FTS 8-245-3045 Comm 202-245-3045	NPRM: 45FR33814 (5/20/80) FR: 11/80
Maximum Clean-up Liabilities for Discharges of Oil and Hazardous Substances from Land-Based Facilities (SAN No. 1447)	A. Description: This regulation will establish maximum limits of liability that range from $8 million to $50 million for certain classes of facilities that measurably reduce the risk that their discharge might damage the environment. The facilities covered by this regulation are those that have begun beneficial engineering practices or discharge treatment or control. B. Classification: Routine. C. Statutory Authority: CWA 311(q); 33 USC 1321(9). D. CFR Change: 40 CFR 113	James Kohler EPA (WH-585) Washington, DC 20460 FTS 8-245-3036 Comm 202-245-3036	NPRM: 10/80 FR: 6/81

SIGNIFICANT EPA REGULATIONS UNDER CONSIDERATION—Continued

Title	Summary	Contact	Timetable
	WATER QUALITY—Continued		
Gray Water Discharges from Commercial Vessels on the Great Lakes (SAN No. 1448)	A. Description: These rules establish secondary treatment or equivalent requirements for commercial vessels navigating the Great Lakes. B. Classification: Routine C. Statutory Authority: CWA 312(c)(2)(B); 33 USC 1322(c)(2)(B) D. CFR Change: 40 CFR 140.	Jonathan Amson EPA (WH-585) Washington, DC 20460 FTS: 8-245-3036 Comm: 202-245-3036	NPRM: 1/81 FR: 12/81
Ocean Discharge Criteria (SAN No. 1454)	A. Description: These regulations are guidelines designed to protect marine resources and their life from the harmful effects of pollution. They look to workable land based alternatives and to recycle/reuse technologies to limit marine pollution. The Agency will use these guidelines to evaluate all NPDES permit applications that involve discharges from point sources into the territorial seas, contiguous zone, and ocean. B. Classification: Routine. C. Statutory Authority: CWA 403(c); 33 USC 1343(c). D. CFR Change: Revisions to 40 CFR 220–27.	Kenneth Farber EPA (WH-586) Washington, DC 20460 FTS: 8-472-5746 Comm: 202-472-5746	IFR: 44FR65751 (11/15/79) NPRM: 45FR9548 (2/12/80) FR: 8/80
Section 404 of the CWA requires that EPA write guidelines to be used by the Corps of Engineers and the States in granting or denying permits for the discharge of dredged or fill material into navigable waters at specified disposal sites. The purpose of these guidelines is to prevent discharges from having an unacceptable adverse effect on municipal water supplies, shellfish beds and fishery areas, wetlands, wildlife, or recreational areas.			
Guidelines for Specification of Disposal Sites for Dredged or Fill Material (SAN No. 1455)	A. Description: These guidelines provide the substantive criteria and the evaluative tools for selecting a disposal site for dredged or fill material having an acceptable (or negligible) environmental impact. Interim Final Guidelines were published in 1975. These revised guidelines are necessary to bring in new scientific information, experience from program operation, and statutory changes to the program (1977 amendments to the Act). B. Classification: Routine. C. Statutory Authority: CWA 404(b)(1); 33 USC 1344 (b)(1) D. CFR Change: Revision to 40 CFR 230.	Joseph Krivak EPA (WH-585) Washington, DC 20460 FTS: 8-472-3400 Comm: 202-472-3400	IFR: 40FR41292 (9/5/75) NPRM: 44FR54222 (9/18/79) FR: 9/80
Guidelines for Specification of Disposal Sites for Dredged or Fill Material (Revision of Chemical and Biological Testing and Mixing Zone Determinations) (SAN No. 1585)	A. Description: This rulemaking will revise part of the section 404(b)(1) guidelines: (1) To bring the 1975 Interim Final Guidelines up to date—in the light of new research and management information on testing procedures, and (2) To provide a format for the testing procedures; which will be clearer for both applicants and permitting officials. B. Classification: Routine C. Statutory Authority: CWA 404(b)(1); 33 USC 1344 (b)(1) D. CFR Change: Revision to 40 CFR 230.	Joseph Krivak EPA (WH-585) Washington, DC 20460 FTS: 8-472-3400 Comm: 202-472-3400	IFR: 40FR41292 (9/5/75) NPRM: 44FR54222 (9/18/79) NPRM: 9/80 Final: 2/81
Sludge Management Guidelines (SAN No. 1459, Docket No. 405)	A. Description: The regulations will provide guidelines for the disposal and use of wastewater treatment plant sludge, including the distribution and marketing of fertilizers and soil conditioners derived from sewage sludge. The fall 1980 proposal will apply to the distribution and marketing of sewage products. Additional proposals on other sludge management will come later. B. Classification: Major. C. Statutory Authority: CWA 405; 33 USC 1345. D. CFR Change: 40 CFR 258. E. Analysis: UCIA.	Emery C. Lazar EPA (WH-564) Washington, DC 20460 FTS: 8-755-9120 Comm: 202-755-9120	NPRM: 12/80 FR: Fall 1981

SIGNIFICANT EPA REGULATIONS UNDER CONSIDERATION—Continued

Title	Summary	Contact	Timetable
	WATER QUALITY—Continued		
Revision of Ocean Dumping Criteria (SAN No. 1604)	A. Description: This action opens ocean dumping criteria for possible revision based on public comment, new research information, and operating experience. B. Classification: Major C. Statutory Authority: MPRSA, 33 USC 1401 et seq D. CFR Change: Revision to 40 CFR 225,227,228	T. A. Wastler EPA (WH 548) Washington, D.C. 20460 FTS: 8-472-2836 Comm: 202-472-2836	ANPRM: 6/80
	GENERAL		
Assessing the Environmental Effects of EPA Actions Abroad (SAN No. 1565)	A. Description: Presidential Executive Order 12114 requires each Federal agency to publish procedures for assessing the effects of its activities outside the United States. EPA has complied by integrating these procedures with the existing NEPA/EIS regulations, which already provide for assessing the effects of EPA activities. B. Classification: Routine. C. Statutory Authority: Presidential Executive Order 12114. D. CFR Change: Revision to 40 CFR 6 (Subpart J)	Judith Troast EPA (A-104) Washington, DC 20460 FTS 8-755-9408 Comm. 202-755-9408	NPRM: 44FR68776 (11/29/79) FR: 8/80
Historic Preservation Regulations (SAN No. 1566)	A. Description: On January 30, 1979, the Advisory Council on Historic Preservation promulgated regulations that direct Federal agencies to establish procedures for implementing historic preservation requirements. EPA will comply by adding a new subpart to the NEPA regulations. B. Classification: Routine. C. Statutory Authority: National Historic Preservation Act. D. CFR Change: Revision to 40 CFR 6 (subpart K)	Judith Troast EPA (A-104) Washington, DC 20460 FTS: 8-755-9408 Comm: 202-755-9408	NPRM: 9/80 FR: 2/81
Policy on Public Participation (SAN No. 1626)	A. Description: In order to enhance the ability of EPA to manage programs and make decisions in the public interest, the agency is preparing a formal policy for public participation. A degree of standardization in procedures will make it easier for citizens to know what they can expect when they deal with the agency. B. Classification. Policy Statement C. Statutory Authority: E O. 12044, CAA, CWA, FIFRA, TSCA, RCRA D. CFR Change: This action will not be codified in CFR.	Sharon Francis EPA (A-100) Washington, D C. 20460 FTS: 8-245-3066 Comm: 202-245-3066	NPRM: 45FR28911 (4/30/80) FR: 9/80

REGULATIONS DELETED FROM THE PREVIOUS AGENDA

Title and SAN(#)	Statutory Authority/CFR	Reason Deleted	Date & Cite of Last Action
NSPS-Petroleum Liquid Storage Vessels (SAN No. 1006)	CAA 111/40 CFR 60	Completed	FR: 45FR23374 (4/4/80)
Primary Aluminum Plant Fluoride Control-Existing Sources (SAN No. 1121)	CAA 111(d)/40 CFR 60	Completed	FR: 45FR26294 (4/17/80)
NESHAPS: Listing of Arsenic as a Hazardous Pollutant (SAN No. 1300)	CAA 112/40 CFR 61	Completed	Listing: 45FR37886 (6/5/80)
Regulations Providing for State/Local Consultation (SAN No. 1304)	CAA 121/40 CFR 51	Completed	FR: 44FR35176 (6/18/79)
Short Test for Emission Warranties (SAN No. 1326)	CAA 207(b)/40 CFR 86	Completed	FR: 45FR34802 (5/22/80)
Emission Control (Performance) Warranty (SAN No. 1327)	CAA 207(b)/40 CFR 85	Completed	FR: 45FR34829 (5/22/80)
Reporting Identities of Trade Name Chemical Products (SAN No. 1518)	TSCA 8/40 CFR 719	Specialized regulation	
Drinking Water Intake Zone Exemptions (SAN No. 1449)	CWA 312/No CFR Cite	Postponed indefinitely	ANPRM: 44FR54111(9/18/79)
Consolidated Rules of Practice Governing the Assessment of Civil Penalties (SAN No. 1140)	TSCA 16, FIFRA 14, RCRA 3008/40 CFR 22, 80, 168, 226	Completed	FR: 45FR24360 (4/19/80)
Consolidated Permit Regulations (SAN No. 1460)	CWA 402, 404, RCRA 3005, SDWA 1421, CAA 165/40 CFR 122-124	Completed	FR: 45FR33290 (5/19/80)

BILLING CODE 6560-01-C

Appendix I—Calendar of Federal Regulations

Detailed descriptions of selected major EPA regulations appear in the Regulatory Council's *Calendar of Federal Regulations*. In order to make these descriptions more accessible to users of EPA's *Agenda of Regulations*, we are reprinting them here as an appendix. In addition to a general description of the regulations, these entries:

(1) Describe the options under consideration;

(2) Discuss the sectors of society which will be affected by the regulation;

(3) Identify related regulations; and

(4) Identify support documents available from the Agency contact.

The major criterion for including a regulation in the *Calendar of Federal Regulations* is the Agency's judgment that it will impose cost of one-hundred million dollars or more on the economy in any one year following promulgation. Some regulations which do not meet this criterion are included because the Administrator considers them to raise especially important policy issues.

The *Calendar of Federal Regulations* from which these descriptions are taken appeared in the Federal Register on May 30, 1980 at 45 FR 36844.

The regulations appear in the following order:

Review of NAAQS for Carbon Monoxide (SAN No. 1001)
Review of NAAQS for Sulfur Dioxide (SAN No. 1002)
Review of NAAQS for Particulate Matter (SAN No. 1003)
Review of NAAQS for Nitrogen Dioxide (SAN No. 1004)
NSPS for Industrial Boilers (SAN No. 1586)
Policy and Procedures for Airborne Carcinogens (SAN No. 1596)
Prevention of Significant Deterioration from Set II Pollutants (SAN No. 1306)
Visibility Protection Requirements (SAN No. 1307)
Heavy-Duty Diesel Particulate Regulations (SAN No. 1310)
Emission Regulations for 1983 and Later Model Year Light-Duty Trucks (SAN No. 1313)
Emission Regulations for 1985 and Later Model Year Light-Duty Trucks and Heavy Duty Engines (SAN No. 1315)
Fuels and Fuel Additives (SAN No. 1328)
Control of Organic Chemicals in Drinking Water (SAN No. 1201)
Pesticide Registration Guidelines (SAN No's. 1141–1148, 1619–1623)
Environmental Radiation Protection Standards for Management and Disposal of Radioactive Wastes (SAN No. 1163)
Remedial Action Standards for Inactive Uranium Processing Sites (SAN No. 1166)
Hazardous Waste Regulations: Core Regulations to Control Hazardous Solid Waste from Generation to Final Disposal (SAN No's. 1191, 1194)
Test Rules for Chemical Substances and Mixtures—Chloromethane and Chlorinated Benzenes (SAN No. 1131)
Premanufacture Notification Requirements and Review Procedures (SAN No. 1134)
Rules Restricting the Commercial and Industrial Use of Asbestos Fibers (SAN No. 1627)
Chemical Hazard Warning Labels (SAN No. 1530)
Effluent Limitations for Iron and Steel Plants (SAN No. 1405)
Effluent Limitations for Steam Electric Power Plants (SAN No. 1408)
Effluent Limitations for Pulp, Paper and Paperboard Mills (SAN No. 1419)

Review, and Possible Revision, of the National Ambient Air Quality Standard for Carbon Monoxide (40 CFR Part 50*)

Legal Authority

Clean Air Act, as amended, § 109(d)(1), 42 U.S.C. 7409 *et seq.*

Reasons for Including This Entry

The Environmental Protection Agency (EPA) believes that this review is important in order to ensure the protection of public health and welfare and because any changes to the existing standards may result in an annual effect of $100 million or more on the economy. Ambient air quality standards define allowable pollutant concentrations in the ambient air that are requisite to protect public health and welfare.

Statement of Problem

Section 109(d)(1) of the Clean Air Act as amended directs EPA to review existing national ambient air quality standards (NAAQS) every five years. EPA set the original standards (April 30, 1971, 36 FR 8186) at 9 parts per million (ppm) averaged over an 8-hour period and 35 ppm for a 1-hour period. After review of scientific bases for the standards (the air quality criteria), EPA will decide whether to propose new standards or reaffirm the original standards.

The magnitude of the problem resulting from human exposure to carbon monoxide has not been completely quantified. However, there are several population groups that are particularly sensitive to carbon monoxide exposure, such as patients with coronary heart disease (e.g., angina pectoris), peripheral vascular disease, cerebrovascular disease, or chronic obstructive pulmonary disease; pregnant mothers and their fetuses; and patients with anemia. These sensitive population segments range from 5 to 12 percent of the U.S. population. In other words, several million persons in the United States with cardiovascular, pulmonary, and central nervous system disease can have these conditions aggravated by exposure to carbon monoxide.

Alternatives Under Consideration

Major alternatives to maintaining existing standards are:

(1) to change the concentration levels of the standards, and

(2) to change the time periods over which concentrations are measured.

EPA may make the health-based (primary) standards more stringent, less stringent, or keep them at current levels. The Agency is looking at alternative primary standard levels, and at the need for the existing secondary standard to protect against environmental and other non health damages.

We are investigating no new Federal regulatory techniques in the CO NAAQS review process. All governmental regulatory actions taken as a result of EPA's seting a NAAQS are at the discretion of State governments. The states are free to use performance standards, economic incentives, or any other means to attain ambient air quality standards within their jurisdiction. The only EPA requirement for State governments is that they demonstrate attainment and maintenance of the NAAQS by statutory compliance dates.

Summary of Benefits

Sectors Affected: Revision of air quality criteria and review of the existing ambient standard will result in greater assurance that the standard which EPA reaffirms or new promulgates will protect public health and welfare, specifically, those individuals with cardiovascular heart disease.

Summary of Costs

Sectors Affected: State air pollution control strategies for attaining CO ambient air quality standards probably will focus on reducing emissions from motor vehicles. These strategies may affect the automotive industry, the driving public, transportation planning, and highway street operations. Motor vehicles account for nearly 75 percent of the nationwwide CO emissions; most high CO monitor readings occur in urban areas with heavy traffic. EPA will complete a study of the costs and economic effects of controlling CO emissions to meet alternative air standards at the time we propose any changes to the CO standard.

Related Regulations or Actions

Internal: Based on the alternative air quality standards under consideration and our current understanding of control requirements, it is unlikely that revised

EPA emissions standards for motor vehicles will result from this review.

External: Modifications in existing standards could require states to reassess their current implementation control programs, and make revisions in control measures and strategies if necessary.

Active Government Collaboration

Other Federal agencies that are involved in reviewing the standard include the Departments of Transportation; Energy; and Health, Education, and Welfare. In addition, EPA has contracted the Interagency Regulatory Liaison Group (IRLG) and will involve them in the standard review. The IRLG functions to coordinate the regulatory authorities of the Environmental Protection Agency, Food and Drug Administration, Consumer Product Commission, Occupational Safety and Health Administration, and the Food Safety and Quality Service, Department of Agriculture.

Available Documents

ANPRM—"Review of the Carbon Monoxide Air Quality Standard," 43 FR 56250, December 1, 1978.

Air Quality Criteria for Carbon Monoxide (External Review Draft, April 1979); it is available from the Environmental Criteria and Assessment Office, MD-52, U.S. Environmental Protection Agency, Research, Triangle Park, N.C. 27711.

U.S. Environmental Protection Agency Science Advisory Board Clean Air Scientific Advisory Committee, Subcommittee on Carbon Monoxide, "Transcript of Proceedings" for January 30 and 31, 1979 and June 14-16, 1979; these are available for review in the Central Docket Section, U.S. EPA, Room 29038, 401 M Street, S.W., Washington, D.C. between 9:00 a.m. and 4:00 p.m. on weekdays.

Control Techniques for Carbon Monoxide Emissions, EPA-450/3-79-006, June 1979; the report is available from U.S. EPA Library (MD-35), Research Triangle Park, N.C. 27711. Telephone: (919) 541-2777.

EPA has established a docket (EPA, Central Docket Section OAQPS-79-7) for review of this standard.

Review, and Possible Revision, of the National Ambient Air Quality Standards for Sulfur Dioxide (40 CFR Part 50*)

Legal Authority

The Clean Air Act, as amended, § 109(d)(1), 42 U.S.C. § 7409 *et seq.*

Reasons for Including this Entry

The Environmental Protection Agency (EPA) believes that this review is important in order to ensure the protection of public health and welfare, and because any changes to the existing standards may result in an annual effect of $100 million or more on the economy.

Statement of Problem

Section 109(d) of the Clean Air Act Amendments of 1977 directs the EPA to review the existing National Ambient Air Quality Standards (NAAQS) every 5 years. The present primary standard for sulfur dioxide (set to protect public health) is 80 micrograms per cubic meter ($\mu g/m^3$) annual arithmetic mean, and a maximum 24 hour concentration of 365 $\mu g/m^3$, not to be exceeded more than once per year. The current secondary standard for sulfur dioxide (to protect public welfare) is 1300 $\mu g/m^3$, maximum 3 hour concentration not to be exceeded more than once per year. The states are responsible for developing and implementing the necessary regulatory programs to ensure the attainment and maintenance of the NAAQS.

EPA will review the scientific basis of the standards (the air quality criteria) as well as the standards themselves. Where appropriate, EPA will revise the air quality criteria and promulgate new standards.

Sulfur oxides in the air, working alone on in combination with other pollutants, aggravate respiratory diseases such as asthma, chronic bronchitis and emphysema, and also irritate the eyes and respiratory tract. Sulfur oxides also cause impaired visibility and help form acid rain which adversely effects crops, materials, and aquatic ecosystems.

Alternatives Under Consideration

Based on the revised air quality criteria, EPA may decide to keep the existing standards without change, or may alter the air concentration of sulfur dioxide or the period over which the concentration is measured.

There are no new Federal regulatory techniques being investigated in the NAAQS review and revision process. All governmental regulatory actions taken as a result of setting a NAAQS are at the discretion of State governments. They are free to use performance standards, economic incentives, or any other means to attain ambient air quality standards within their jurisdiction. The only EPA requirement for State governments is that they attain and maintain the NAAQS by statutory compliance dates.

Summary of Benefits

Sectors Affected: The general public including children and those persons suffering from respiratory diseases as well as agricultural interests will benefit from this review of the NAAQS. The revision of the air quality criteria and the review of the existing ambient standards will result in greater assurance that the standards whether reaffirmed or newly promulgated, will adequately protect health and welfare of the general public including those most sensitive to adverse health affects of sulfur oxides.

Summary of Costs

Sectors Affected: This revision of the air quality criteria and review of the existing ambient standards may affect utilities, the non-ferrous metal industry, the petroleum industry, and those industries that supply or use large quantities of fossil fuel and State air pollution control agencies.

A study of costs and economic impacts of controlling sulfur oxides under alternative standards will be completed by EPA when the NPRM is issued. In addition, EPA will also assess the impact on State air pollution control agencies of modifying their control programs in order to accommodate any revisions to existing standards.

Related Regulations and Actions

Internal: Changes to the current ambient standards may affect EPA's regulations for new source review.

External: Modifications in the existing standards would require States to reassess their current implementation control programs, and make revisions in control measures and strategies if necessary.

Active Governmental Collaboration

Other Federal agencies which are actively involved in reviewing the sulfur oxide standards are the Departments of Energy; Transportation; Interior; Commerce; Health, Education, and Welfare; and the Tennessee Valley Authority. In addition, EPA has informed the Interagency Regulatory Liaison Group (IRLG) of this review. The IRLG functions to coordinate certain regulatory activities of the Environmental Protection Agency, Food and Drug Administration, Consumer Product Safety Commission, Occupational Safety and Health Administration, and the Food Safety and Quality Service, Department of Agriculture.

Available Documents

ANPRM—"National Ambient Air Quality Standards; Review of Criteria

and Standards for Particulate Matter and Sulfur Oxides," 44 FR 192, October 2, 1979.

"Air Quality Criteria for Sulfur Oxides," AP-50, January 1969—available from the National Technical Information Service, 5285 Port Royal Road, Springfield, VA 22161.

"Sulfur Oxides," National Academy of Sciences, 1978—available from the National Academy of Sciences, Printing and Publication Office, 2101 Constitution Avenue, Washington, D.C. 20418

Review, and Possible Revision, of the National Ambient Air Quality Standards for Particulate Matter (40 CFR Part 50*)

Legal Authority

The Clean Air Act, as amended, § 109(d)(1), 42 U.S.C. § 7409 *et seq.*

Reasons for Including This Entry

The Environmental Protection Agency (EPA) believes that this review is important to ensure the protection of public health and welfare, and because any changes to the existing standards may result in an annual effect of $100 million or more on the economy.

Statement of Problem

Section 109(d) of the Clean Air Act Amendments of 1977 directs EPA to review the existing National Ambient Air Quality Standards (NAAQS) every 5 years. The current Primary Standard for particulate matter (to protect public health) is 75 micrograms per cubic meter ($\mu g/m^3$) annual geometric mean and 260 $\mu g/m^3$, maximum 24 hour concentrations, not to be exceeded more than once per year. The current Secondary Standard for particulate matter (to protect public welfare) is 150 $\mu g/m^3$, maximum 24 hour concentration, not to be exceeded more than once per year. The states are responsible for developing and implementing the necessary regulatory programs to ensure the attainment and maintenance of the NAAQS.

EPA will review the scientific basis of the standard (the air quality criteria) as well as the standards themselves. Where appropriate, EPA will revise the air quality criteria and promulgate new standards.

Exposure to airborne particulate matter (PM) aggravates asthma and other respiratory disorders, and cardiovascular diseases, and can impair pulmonary function, and increase coughing, and chest discomfort. PM may also increase the adverse health effects of gasious air pollutants, such as SO_2. Depending on their chemical composition, specific types of PM may have more serious toxic or carcinogenic effects than others. Elevated PM levels result in increased soiling of exposed materials and impair visibility.

Alternatives Under Consideration

Based on the revised air quality criteria, EPA may decide to keep the existing standards without change, or may decide to change the allowable air concentration of particulate matter, the period over which the concentration is measured, or the number of allowable exceedances. EPA is also considering standards based on the size of the particulate as well as its concentration. This consideration is based on evidence that smaller particles penetrate deeper into the lung, and evidence that when elevated concentrations of particulate matter occur in combination with elevated levels of sulfur oxides adverse health effects may be more pronounced.

EPA is not investigating new federal regulatory techniques in the NAAQS review and revision process. All governmental regulatory actions taken as a result of setting a NAAQS are at the discretion of State governments which are free to use performance standards, economic incentives, or any other means to attain ambient air quality standards within their jurisdiction. The only EPA requirement for State governments is that they attain and maintain the NAAQS by statutory compliance dates.

Summary of Benefits

Sectors Affected: The general public, including children and those persons suffering from respiratory diseases and cardiovascular diseases, will benefit from this review of the NAAQS. The revision of the air quality criteria and the review of the existing ambient standards will result in greater assurance that the standards, whether reaffirmed or newly promulgated, will adequately protect health and welfare of the general public including those groups within the general public most sensitive to adverse health affects of PM.

Summary of Costs

Sectors Affected: This review and possible revision of the ambient standards may affect utilities, the non-ferrous metal industry, those industries that use large quantities of fossil fuel and state air pollution control agencies..

EPA will complete a study of costs and economic impacts of controlling particulate matter under alternative standards when it issues the NPRM. In addition, EPA will also assess the impact on State air pollution control agencies of modifying their control programs to accommodate revisions to the existing standards.

Related Regulations and Actions

Internal: Changes to the current ambient standards for particulate matter may affect EPA's regulations for new source review.

External: Modifications in the existing standards would require States to reassess their current implementation control programs and make revisions in control measures and strategies if necessary.

Active Government Collaboration

Other Federal agencies which are actively involved in reviewing the standards for particulate matter are the Departments of Energy; Transportation; Interior; Commerce; Health, Education and Welfare; and the Tennessee Valley Authority. In addition EPA has informed the Interagency Regulatory Liaison Group (IRLG) of this review. The IRLG functions to coordinate the regulatory authorities of the Environmental Protection Agency, Food and Drug Administration, Consumer Product Safety Commission, Occupational Safety and Health Administration, and the Food Safety and Quality Service, Department of Agriculture.

Available Documents

ANPRM—"National Ambient Air Quality Standards; Review of Criteria and Standards for Particulate Matter and Sulfur Oxides," 44 FR 192, October 2, 1979.

"Air Quality Criteria for Particulate Matter," AP-49, January 1969 available from the National Technical Information Service, 5285 Port Royal Road, Springfield, VA 22161. "Health Effects Considerations for Establishing a Standard for Inhalable Particles," July 1978, available from the Health Effects Research Laboratory, Environmental Protection Agency, Research Triangle Park, N.C. 27701.

Airborne Particulate, National Academy of Sciences, 1977 available from the National Technical Information Service, 5285 Port Royal Road, Springfield, VA 22161.

Review, and Possible Revision, of the National Ambient Air Quality Standard for Nitrogen Dioxide (40 CFR Part 50*)

Legal Authority

Clean Air Act, as amended, §§ 109(c) and 109(d), 42 U.S.C. § 7409 *et seq.*

Reasons for Including This Entry

The Environmental Protection Agency (EPA) believes that this review is important to ensure the protection of public health and welfare and because

any changes to the existing standards may result in an annual effect of $100 million or more on the economy.

Statement of Problem

Section 109(c) of the Clean Air Act as amended directs EPA to promulgate a short-term nitrogen dioxide (NO_2) standard, unless there is no significant scientific evidence that such a standard is needed to protect public health. Section 109(d)(1) of the Act requires EPA to review existing National Ambient Air Quality Standards (NAAQS) every five years; this review includes the existing NO_2 annual average standard promulgated by EPA on April 30, 1971 (36 FR 8186). This standard is 100 micrograms per cubic meter ($\mu g/m^3$), annual arithmetic mean (40 CFR 50.11). The Agency has combined possible proposal of a short-term NO_2 standard with review of the annual average NAAQS into one rulemaking process (see 45 FR 6959, January 31, 1980). After review of scientific bases of the standards (the air quality criteria), EPA will decide whether to propose a short-term NO_2 standard and change or reaffirm the existing annual, NO_2 NAAQS.

Public exposure to NO_2 can result in impairment of pulmonary (lung) function and can increase susceptibility to respiratory infection. NO_2 or other nitrogen oxide compounds in the ambient air can adversely affect crops, visibility, and materials, and can cause acid rainfall. Acid rain adversely affects crops, materials, and aquatic ecosystems.

Alternatives Under Consideration

Based on revised air quality criteria, EPA may decide to keep the existing annual standard without change, or make some modification to the allowable air concentration of nitrogen dioxide. The agency may also decide to propose a short-term NO_2 standard.

We are investigating to new regulatory techniques in the NO_2 NAAQS review/standard-setting process. All governmental regulatory actions taken as a result of setting a NAAQS are at the discretion of State governments. They are free to use performance standards, economic incentives, or any other means to attain ambient air quality standards within their jurisdiction. The only EPA requirement for State governments is that they demonstrate attainment and maintenance of the NAAQS by statutory attainment dates.

Summary of Benefits

Sectors Affected: The general public, particuarly those persons suffering from respiratory diseases, will benefit from this review of the NAAQS.

Revision of air quality criteria and review of the existing ambient standard will result in greater assurance that the standard which EPA reaffirms or newly promulgates will protect public health and welfare.

Summary of Costs

Sectors Affected: We will complete a study of the costs and economic effects of controlling oxides of nitrogen for alternative short-term and annual standards at the time we propose a revised standard. If the Agency's NO_2 activities result in a new regulatory action, the regulation could affect the level of control for point sources of nitrogen oxides emissions, such as power plants, industrial boilers, and natural gas pipeline stations. We currently are controlling mobile source emissions under existing emissions limits for motor vehicles; however, a stringent short-term NO_2 standard could result in the need for community wide inspection and maintenance programs for automobile and truck emissions.

Related Regulations and Actions

Internal: Changes to the current ambient standard may affect EPA's regulations for nitrogen oxides emissions from motor vehicles and EPA regulations for new source review.

External: Modifications in the existing standard may require States to reassess their current implementation control programs and make revisions in control measures and strategies if necessary. A new short-term standard would require States to assess ambient air quality data, and if concentrations exceed the standard, develop a State implementation plan to control NO_2 emissions.

Active Government Collaboration

Other Federal agencies that are involved in reviewing the nitrogen dioxide standards are the Department of Energy; Transportation; Interior; Commerce; and Health, Education and Welfare; and the Tennessee Valley Authority. In addition, we have informed the Interagency Regulatory Liaison Group (IRLG) of this review. The IRLG functions to coordinate the regulatory authorities of the Environmental Protection Agency, Food and Drug Administration, Consumer Product Safety Commission, Occupational Safety and Health Administration, and the Food Safety and Quality Service, Department of Agriculture.

Available Documents

Air Quality Criteria for Nitrogen Dioxide (external review draft, June 1979), available from the Environmental Criteria and Assessment Office (ECAO), U.S. Environmental Protection Agency, MD-52, Research Triangle Park, North Carolina 27711.

U.S. Environmental Protection Agency, Science Advisory Board, Clean Air Scientific Advisory Committee, Committee meeting on Air Quality Criteria for Oxides of Nitrogen, "Transcript of Proceedings" conducted in Washington, D.C. on January 29 and 30, 1979; available from ECAO.

EPA will complete a study of costs and economic impacts of controlling nitrogen oxides when it issues the NPRM.

Control Techniques for Nitrogen Dioxide Emissions (draft, January 1978), available from Emission Standards and Engineering Division, U.S. Environmental Protection Agency, MD-13, Research Triangle Park, North Carolina 27711.

"National Ambient Air Quality Standards: Establishment of Standard Review Docket for Nitrogen Dioxide," 45 Federal Register 6958 (January 31, 1980).

EPA has established a docket (EPA; Central Docket Section OAQPS-78-9) for review of the NO_2 standard.

Standards of Performance To Control Atmospheric Emissions From Industrial Boilers (40 CFR Part 60)

Legal Authority

The Clean Air Act, as amended, § 111, 42 U.S.C. § 7411.

Reasons for Including This Entry

The Environmental Protection Agency (EPA) believes this rule would be important because it would affect many industries, address a major air polluter in industrial boilers, and minimize emissions in the face of increased industrial use of coal. The impact of this regulation on industry would approach $100 million per year for additional capital and annualized costs by 1990.

Statement of Problem

Combustion of coal, oil, and gas in industrial boilers results in the emission of significant quantities of particulate matter, sulfur dioxide, and nitrogen oxides to the atmosphere. Because of the large number of boilers and the associated emission rates, industrial boilers contribute significantly to air pollution in the United States. In 1975, emissions from industrial boilers were estimated to include 2.77 million tons of particulate matter, 3.25 million tons of sulfur dioxide, and 2.01 million tons of

nitrogen oxides or approximately 17, 11, and 8 percent of total national emissions of these pollutants. The projected growth rate of the use of industrial boilers, coupled with the emphasis on shifting fuel from gas and oil to coal, will increase the potential for emissions. These air pollutants affect the health and welfare of most of our urban-dwelling citizens by contributing to disease in people and animals, reducing visibility in the atmosphere, damaging vegetation, and soiling and deteriorating real estate. Failure to provide more effective control of emissions from industrial boilers will increase exposure to the undesirable effects of these pollutants and will expand the portions of the country that exceed EPA's ambient standards for these pollutants.

Alternatives Under Consideration

The 1977 Clean Air Act requires that EPA adopt standards of performance for stationary sources of air pollution that are fired by fossil fuels. EPA is gathering information on eight technologies for reducing boiler emissions: (1) oil cleaning and existing clean oil, (2) coal cleaning and existing clean coal, (3) synthetic fuels, (4) fluidized bed combustion, (5) particulate control, (6) flue gas desulfurization, (7) nitrogen oxides combustion modification, and (8) nitrogen oxides flue gas treatment.

We are using computer modeling to examine alternatives to determine the cost impacts, emission impacts, effects upon fuel consumption, overall energy impacts, and other environmental effects on a regional and national basis. The alternatives include differing levels of emissions for various sizes of boilers and type of fuels.

Summary of Benefits

Sectors Affected: This rule will apply to new and modified industrial boilers used in a large number of manufacturing industries and will affect citizens in urban and rural areas who are subject to pollution emissions from these industries.

Installing equipment that represents the best available control technology at new and modified industrial boiler facilities will help lessen air pollution in already affected areas and preserve clean air in yet unpolluted areas of the country. Such control will reduce the need for using the "cleanest" fuels, which can be diverted to existing plants in which new add-on controls are less cost effective.

A regulation that requires more stringent controls on new and modified industrial boilers will allow industrial expansion and economic growth without an accompanying assaults on ambient air quality.

Summary of Costs

Sectors Affected: This rule will affect new and modified industrial boilers used in a large number of manufacturing industries, and consumers of products produced by these industries. Energy intensive industries such as glass (SIC 321, 322, 323), pulp and paper (SIC 261, 262, 263), and chemical manufacturing (SIC 281) are the specific industries that this rule would affect most.

Cost estimates for applying the control technology required by a regulation governing emissions from industrial boilers would be determined by the number, sizes, and types of sources we regulate and the degree of control we require. EPA estimates that by 1990 annual added capital costs of control will approach $200 million and annualized costs will approach $100 million (1978 dollars). These estimates are necessarily very tentative at this time.

Related Regulations and Actions

Internal: We have issued water pollution regulations in the form of "Best Practical Technology Currently Available" and "Best Available Technology Economically Achievable." Industrial boilers are also subject to requirements of the Resource Conservation and Recovery Act.

External: Industrial boilers are subject to the Fuel Use Act and associated regulations established by the Department of Energy.

Active Government Collaboration

Because emissions from industrial boilers come from the combustion of fossil fuels, EPA is working closely with the Department of Energy to share information and stimulate advances in technology.

Available Documents

ANPRM—40 CFR 60 (44 FR 37632, June 28, 1979)

Policy and Procedures for Identifying, Assessing, and Regulating Airborne Substances Posing a Risk of Cancer (40 CFR Part 61)

Legal Authority

The Clean Air Act, as amended, §§ 111, 112, and 301(a), 42 U.S.C. §§ 7411, 7412, and 7601(a).

Reason for Including This Entry

The Environmental Protection Agency thinks that this policy is important because it will set a precedent in establishing how EPA will regulate airborne carcinogens under the Clean Air Act, and include the role of risk assessment and economics in the regulatory process.

Statement of Problem

Cancer is the second leading cause of death in the United States. One American in four is expected to contract some form of cancer in his or her lifetime, and one in five is expected to die from the disease. The most recent statistics show a continued increase in the total incidence of cancer, resulting principally from increases in lung cancer.

Studies of human cancer rates and their worldwide geographical variations, and observations of incidence rates in migrant populations, have revealed that factors in the human environment are probably responsible for a large proportion of cancers. "Environmental factors" in the broad sense include chemical exposures from smoking, diet, occupation, drinking water, and air pollution; various forms of radiation, including sunlight; and some forms of severe physical irritation. Although the uncertainties are great, estimates by the World Health Organization, other prominent institutions, and individual experts suggest that these factors may cause 60 to 90 percent of all human cancers.

Although airborne carcinogens may induce cancer at a number of areas in the body, lung cancer is thought to be the principal form of cancer related to air pollution. While cigarette smoking is probably the most important cause of lung cancer in the United States, many scientists believe that various air pollutants increase the risk of cancer from smoking and other carcinogenic insults. Available estimates also indicate that occupational exposures to chemicals are responsible for a significant portion of the incidence of lung cancer in the United States.

Through preliminary examination industries producing chemicals and radioactive materials, and of air sampling results, EPA has identified over 50 known or potential chemical carcinogens and numerous radioactive materials which may be emitted into the atmosphere. Many of these substances are synthetic organic chemicals that have been in commercial use only since the 1930s. Because cancer induced by exposures to small amounts of airborne carcinogens may not appear for 15 to 40 years after exposure, it is still too early to detect the full effects of these chemicals on human health. Thus, it is both prudent and, in view of the large number of people potentially affected, important to reduce or contain emissions of known or suspected

atmospheric carcinogens in order to prevent future problems before we actually observe them.

We have, since 1971, listed three airborne carcinogens (asbestos, vinyl chloride, benzene) as hazardous pollutants under § 112, "National Emission Standards for Hazardous Air Pollutants," of the Clean Air Act. As required by § 112, we have developed and are continuing to develop emission standards for significant sources of these pollutants. In addition, we are evaluating a number of other potentially carcinogenic substances to determine whether action under § 112 is appropriate. We have found our actions on airborne carcinogens to be hampered by the lack of a policy, developed with public participation, that would guide our use of § 112 to control airborne carcinogens.

Specifically, we need publicly stated, legally binding policies and regulatory mechanisms are needed to: (1) determine the carcinogenicity and carcinogenic risks of air pollutants for regulatory purposes, (2) establish priorities for evaluating the need for and implementing additional regulatory action, (3) specify the degree of source control required in general under § 112 and how we will determine that level of control in setting individual standards, and (4) provide more extensive public involvement in the Agency's decision-making on the regulation of airborne carcinogens.

Alternatives Under Consideration

We describe a number of alternatives in the proposal document (44 FR 58642, October 10, 1979). Beyond that, the principal alternative is to have no formal policy. Under this alternative, EPA would continue with a case-by-case approach for regulating airborne carcinogens under § 112 of the Clean Air Act. This strategy would allow the Agency maximum regulatory flexibility, but would not give either the general public or the regulated industry sufficient information to enable them to participate fully in the rulemaking process. In addition, the alternative of no policy would not resolve the difficulties which EPA has encountered in the listing of airborne carcinogens and in the subsequent development of emissions regulations. It also does not recognize the need for procedures to ensure that available resources are allocated to the most important or tractable problems on a priority basis.

Under the policy, we will list under § 112 those airborne substances identified as high probability human carcinogens which present a significant carcinogenic risk to public health as a result of air emissions from one or more categories of stationary sources. Where applicable, we will propose generic standards for control of fugitive emissions from industrial sources concurrently with the listing to expedite reductions in emissions which can be achieved through good housekeeping practices in the manufacturing, handling, or use of hazardous materials. We will use risk assessments to determine priorities for further regulation of significant source categories and in the evaluation of residual risk.

At a minimum, the policy requires new and existing sources which present or would present significant cancer risks to apply best available technology (BAT) to control emissions of listed airborne carcinogens. BAT for new sources represents the most advanced level of control adequately demonstrated, considering economic, energy, and environmental effects. For existing sources, the determination of BAT also considers the impacts and technological problems associated with the retrofitting of control equipment. Controls more stringent than BAT may be imposed if the risk remaining after the application of BAT is unreasonable, or, for new sources, if EPA's criteria for risk avoidance associated with plant siting connot be met.

Our proposed policy contains no reporting requirements.

Innovative Regulatory Techniques: In most cases, emission standards we establish pursuant to our proposed policy will be in the form of performance standards, rather than specific design standards. Design, operating, or equipment standards will be used only when performance standards are not practical.

In addition, the new source siting provisions of the policy allow a new source owner to use an emission offset mechanism to locate a new source of airborne carcinogens in an area where other such sources exist or where the owner has difficulty in meeting emission requirements for the new source.

Summary of Benefits

Sectors Affected: Generic and emission standards that we develop for sources of airborne carcinogens under the proposed policy will reduce cancer risks for large segments of the U.S. population exposed to these substances in the ambient air. The greatest benefits will be to individuals who live in the immediate vicinity of characteristic source types.

While low levels of potentially carcinogenic substances have been detected in many parts of the country, the areas of greatest concern are densely populated urban centers and areas with a high concentration of chemical manufacturing industries. In the latter case, the proposal would benefit populations in the Gulf Coast (Louisiana and Texas), the Kanawha Valley (West Virginia), and Northern New Jersey.

The proposed policy will significantly improve EPA's regulatory effort in identifying and controlling airborne carcinogens. Proposing generic standards for certain categories for sources concurrent with listing under § 112 will provide significant reduction in emissions pending development of final § 112 standards.

A mechanism for establishing regulatory priorities will insure that we address the most important or tractable problems first. The policy also provides for increased public understanding of an participation in EPA's actions and allows EPA to give earlier notice of its findings and regulatory intent to State and local regulatory authorities and to industries.

Summary of Costs

Sectors Affected: Our preliminary analyses have identified a number of source types which may emit carcinogenic substances into the atmosphere. Most of these types fall into one of the following six broad groups: (1) mining, smelting, refining, manufacture and end-use of minerals and other inorganic chemicals; (2) combustion processes, coke ovens incinerators, power plants, etc.; (3) petroleum refining, distribution, and storage; (4) synthetic organic chemical industries and end-use applications and waste disposal; (5) mining, processing, use and disposal of radioactive substances and radioactive by-products; and (6) sources of noncarcinogenic emissions which are chemically transformed into carcinogens in the atmosphere.

We intend the proposed rule only to guide the Agency in identifying and controlling airborne carcinogens. In its present form, we cannot assess its regulatory effects quantitatively. This policy will, however, provide a basis for impact assessments in subsequent regulatory actions that are taken in accord with its provisions.

Related Regulations and Actions

Internal: Other offices within EPA which are also in the process of developing carcinogen control programs include the Office of Pesticides and Toxic Substances, the Office of Water and Waste Management, and the office of Mobile Source Air Pollution Control.

A program is also underway to develop an agency wide cancer policy.

External: Related external efforts include the development of a national cancer policy by the member agencies of the U.S. Regulatory Council, the recent report by the Risk Assessment Work Group of the Interagency Regulatory Liaison Group (IRLG) on the identification of carcinogens and the quantitative assessment of risks; a staff paper by the White House Office of Science and Technology Policy on the identification, characterization, and control of potential human carcinogens; and a report to the President by the interagency Toxic Substances Strategy Committee.

Other regulatory agencies that are involved in this area include the Occupational Safety and Health Administration, which published a final policy for regulating occupational exposure to carcinogens on January 22, 1980 (45 FR 5002), the Food and Drug Administration, and the Consumer Product Safety Commission. Nongovernmental groups which have expressed interest in or made recommendations on the control of carcinogens include the Environmental Defense Fund, the American Industrial Health Council, and the Natural Resources Defense Council.

Active Government Collaboration

The Agency has presented testimony at the public hearings held after the Occupational Safety and Health Administration proposed its carcinogen policy. We have also provided information briefings for the Interagency regulatory Liaison Group and members of the President's Council on Environmental Quality and the Council on Wage and Price Stability, Congressional staff, and interested State air pollution agencies. We have participated in the proposed policy regulating chemical carcinogens issued by the Regulatory Council on October 17, 1979 (44 FR 60038).

Available Documents

"Policy and Procedures for Identifying, Assessing, and Regulating Airborne Substances Posing a Risk of Cancer"—NPRM October 10, 1979, 44 FR 58642.

"National Emission Standards for Hazardous Air Pollutants—Generic Standards"—ANPRM October 10, 1979, 44 FR 58662.

"Summary of Responses and Proposals—Testimony and Written Submissions". EPA Public Hearings on Regulatory of Carcinogenic Air Pollutants, Washington, D.C., March 23, 1978.

Testimony presented at public hearing in Washington, D.C., Boston, MA, and Houston, TX the week of March 10, 1980 as well as the written comments received.

These documents as well as others referenced in the proposed policy are available in a public rulemaking docket number OAQPS *79-14*. The docket is open for public inspection between 8:00 a.m. and 4:00 p.m. Monday through Friday at: Central Docket Section, Room 29039, Waterside Mall, 401 M Street, SW., Washington, D.C. 20460.

Regulations for the Prevention of Significant Deterioration (PSD) From Set II Pollutants (Hydrocarbons, Carbon Monoxide, Nitrogen Oxide, Ozone and Lead). (40 CFR 51.24, 52.21)*

Legal Authority

The Clean Air Act, as amended, § 166, 42 U.S.C. § 7476.

Reasons for Including This Entry

The regulation when developed and promulgated is likely to impose siting restrictions on air pollution sources because of limitations on area-wide emission totals.

Statement of the Problem

The purpose of this program is to provide for adequate representation of the public interest where the Nation's clean air resources are threatened by increases in concentrations of Set II pollutants (hydrocarbons, carbon monoxide, nitrogen oxides, ozone and lead). The present Prevention of Significant Deterioration (PSD) regulations administered by the Environmental Protection Agency (EPA) require the use of "best available control technoloy" (BACT) on all new or modified major sources of all pollutants covered by the Clean Air Act. In addition the present program also limits increases in area-wide concentrations of sulfur dioxide and particulate matter through an air quality increment system. The present program, however, does not similarly limit area-wide emission levels or air quality impacts of Set II pollutants and, therefore, cannot protect against the degradation of air quality up to the National Ambient Air Quality Standards (NAAQS). The Clean Air Act, as amended in 1977, requires EPA to respond to this problem (42 U.S.C. 7476).

Alternatives Under Consideration

EPA is now reviewing a range of regulatory alternatives which appear to be most reasonable at this time. These alternatives include the following:

Emissions Controls Only—This system would rely primarily on the requirements for best available control technology (BACT) on major new stationary sources and the Federal standards for motor vehicle emissions, with the possible addition of motor vehicle inspection and maintenance requirements. Control requirements under this system would not vary as a function of ambient pollutant concentrations or the proximity of other sources as long as the National Ambient Air Quality Standards were not violated.

Ambient Air Quality Increments—This approach would call for developing an area classification system establishing numerical limits for allowable degradation of ambient air quality. This system would be similar to that already in effect for particulate matter and sulfur dioxide.

Emission Density Zoning (EDZ)—An EDZ system would set theoretical ambient air quality increments to be used only as a guideline for establishing limits on maximum allowable emissions per unit land area. Once EPA established these emission density limits, the appropriate State or local air pollution control agency would base preconstruction review of new and modified sources on the emission density limits rather than on ambient air quality.

Inventory Management—This system would require State and local agencies to develop and maintain detailed emission inventories, with the provision for mandatory periodic public review whenever the local emission inventory increased by a preestablished quantity or percentage. The system would require this public review before allowing any further incremental increase in emissions and could include an environmental analysis, a community environmental education program, a public hearing, and a vote by elected officials from the potentially affected areas.

Statewide Emission Limitation (Bubble)—We would design this system to ensure that aggregate Statewide emissions would not increase. Every local increase (after some fixed time) would require an equivalent decrease somewhere else within the State to offset it.

Avoidance of Juxtaposed Major Sources of Hydrocarbons and Nitrogen Oxides—We would design this approach to prevent significant deterioration in air quality which results from the formation of ozone. Such a program would focus special attention on the hydrocarbon/nitrogen dioxide ratio and would prevent the location of major sources within a certain fixed distance of each other.

Emission Fees—The State would set up a fee system to strengthen the requirements for BACT on major new stationary sources. The State air pollution control agency would then levy a fee on each major new source. The fee would be based on the quantity of emissions and would thus give the source an incentive to develop and incorporate new and more effective strategies for controlling emissions.

Marketable Permits—A marketable permit system would establish permits to emit a certain fixed quantity of emissions and allow air pollution sources to buy and sell those permits. As in an emission fee system, the cost of these permits gives the source an incentive to minimize the quantity of emissions. Furthermore, the responsible air pollution control authority could limit the exact quantity of emissions within any one area by limiting the number of marketable permits allowed within that area.

Summary of Benefits

Sectors Affected: Areas of the country which are presently attaining the NAAQS for carbon monoxide, nitrogen dioxide, ozone, and lead will have a program to prevent significant air quality deterioration from those pollutants. In addition, regulations will provide special protection to national parks, national wilderness areas, and other Class I areas.

These regulations are at such an early stage of development that we cannot yet quantify benefits and costs. The benefits will vary depending on the alternative or alternatives we select. As we noted above, the regulations are unlikely to impose additional direct emission control requirements on air pollution sources, but they may impose siting restrictions because of limitations on area-wide emission totals. Once we complete the regulatory analysis, we will have a better estimate of the benefits and costs associated with this regulation.

Summary of Costs

Sectors Affected: A wide range of industries, including: transportation, electrical power plants, refineries, smelters, petrochemical, and manufacturing industries.

We do not anticipate that the regulation will affect small businesses disproportionately. The regulatory analysis will, however, specifically address this problem.

As we noted above, we will assess the costs of implementing these regulations as a part of the regulatory analysis. We already require the affected sources under the present PSD regulations to install the best available control technology (40 CFR 51.24 and 40. CFR 42.21). Therefore, the costs resulting from this regulation alone will be related only to site location.

Related Regulations and Actions

Internal: EPA has developed and currently administers regulations for the prevention of significant deterioration of air quality resulting from emissions of particulate matter and sulfur dioxide (40 CFR 51.24). The same regulations also require best available control technology on the sources potentially affected by this regulation.

External: The regulation will require each State to develop regulations to implement this program. These regulations will require EPA review and approval.

Active Government Collaboration

EPA has formed an interagency work group to assist it in the development and review of these regulations. The following are members of the workgroup: Department of Transportation; Department of Energy; Department of Interior, National Park Service, Fish and Wildlife Service and Bureau of land Management; Department of Commerce; Department of Housing and Urban Development; Department of Agriculture; and Council on Environmental Quality. In addition, we have solicited and received cooperation from State governments through the State and Territorial Air Pollution Program Administrators and local agencies throughout the Association of Local Air Pollution Control Officers.

Available Documents

None.

Visibility Protection Requirements (40 CFR Part 51.300–51.307)

Legal Authority

The Clean Air Act as amended § 169A, 42 U.S.C. § 7491.

Reasons for Including This Entry

The Environmental Protection Agency (EPA) thinks this rule is important because it will establish a new regulatory program for visibility protection.

Statement of Problem

Congress has set aside certain international parks and national wilderness areas, national memorial parks, and national parks (Class I areas) to preserve and enhance their beauty for present and future generations to enjoy. The intrinsic beauty of these areas, however, has been threatened due to visibility degrading pollution. Congress became aware of the need to protect visibility in these areas and directed EPA to explore the relationship between man-caused pollution and visibility.

From this research we can say there are generally two types of air pollution which reduce or impair visibility:

(1) smoke dust, or colored gas plumes that are emitted from stacks and obscure the sky or horizon relatable to a single source or a small group of sources, and (2) widespread, regionally homogeneous haze from a multitude of sources which impairs visibility in every direction over a large area.

These types of pollution are caused by factories and plants that emit particles and gases into the air. These substances either absorb or scatter the light, thus reducing the amount of light a person can receive from a viewed object. The practical effect is that impaired visibility degrades the aesthetic value of surrounding landscape by either discoloring the atmosphere to produce a visible plume or whitening the horizon and causing objects to appear flattened so that landscape colors and textures become less discernable or, in the case of a discernible plume, obscuring some portion of the landscape.

Current air pollutions control regulations such as the State Implementation Plan, New Source Performance Standards, and Prevention of Significant Deterioration program while requiring emission controls and protection of national ambient air quality standard, do not necessarily provide positive visibility protection in the Class I areas. Therefore, if EPA fails to implement this program, visibility in certain Class I areas will continue to be impaired and/or may be impaired in the future, thus limiting people's enjoyment of the area.

Alternatives Under Consideration

EPA could propose and promulgate a full scale program to address all types of visibility impairment. However, because of lack of technical and scientific evidence on the cause of visibility impairment the Agency prefers a phased program which will first address impairment which visual observations or other monitoring techiniques can reasonably attribute a source. The Agency plans to address other visibility problems when the source/impact relationships are better understood.

Under Phase I of the program the States, in coordination with the Federal Land Managers of the Class I areas will develop plans which will:

1. Require control of impairment that can be traced to a single major source or small group of sources,

2. Evaluate and control new sources to prevent future impairment, and

3. Require States to adopt other strategies to remedy existing and prevent future visibility impairment.

Future phases will further implement the visibility program by addressing more complex problems such as regional haze and urban plumes. Under this alternative, we will promulgate future phases when improvement in monitoring techniques provides more data on source specific levels of visibility, regional scale models become refined, and our general scientific knowledge or visibility improves.

We expect that Phase I of the visibility protection program will serve as a basic framework into which future phases can be incorporated. In other words, the basic plan requirements will remain consistent while only the elements which define the scope of Phase I will change in response to advances in our technical knowledge.

Summary of Benefits

Sectors Affected: The 156 mandatory Class I Federal areas where EPA has determined that visibility is an important value (44 FR 69122, November 30, 1979) and the millions of visitors who use those areas.

These regulations and the State plans developed to implement them will reduce the man-made visibility impairment in those Class I areas. In addition, any added controls on existing and new sources will provide general visibility improvement in the region around those areas.

Summary of Cost

Sectors Affected: EPA expects that fossil fuel fired power plants and a few large industrial complexes (such as pulp mills and smelters) in the Western United States will feel the primary economic effects of the first phase of the program.

The costs of the existing industries involved will be the capital and annual operating costs of additional control equipment. In the case of electric power plants, we expect the costs to be passed on, in the form of rate increases, to the customers of these facilities. EPA will quantify costs as we define regulatory alternatives.

New sources and modification of existing sources which impact the visibility in Class I areas may require additional controls or may be presented from building.

Related Regulations and Actions

Internal: EPA's Prevention of Significant Deterioration regulations (40 CFR 51.24 and 52.21), which govern new source controls and location, affect many of the sources which visibility regulations will affect. Also, EPA's new source performance standard for utility boilers (40 CFR 60 Subpart D) places controls on power plants.

External: Approximately 36 States will be required to develop implementation plans. These plans will require EPA's review and approval.

Active Government Collaboration

EPA has formed an interagency work group to assist it in the development and review of these regulations. The following are members of the work group: Department of Agriculture, U.S. Forest Service; Department of Interior, National Park Service, Fish and Wildlife Service, and Bureau of Land Management; Department of Energy; Tennessee Valley Authority; and Council on Environmental Quality. In addition, we have solicited and received cooperation from State government through the State and Territorial Air Pollution Program Administrators, and local agencies through the Association of Local Air Pollution Control Officers.

Available Documents

Designation of mandatory Class I Federal area where visibility is an important value. 40 CFR Part 81 (44 FR 69122, November 30, 1979)

We published the NAPRM on November 30, 1979 (41 FR 69116).

"Protecting Visibility: An EPA Report to Congress" (EPA 450/5-79-008) Strategies and Air Standards Division, Office of Air Quality Planning and Standards, U.S. Environmental Protection Agency, Research Triangle Park, North Carolina 27711.

"The Development of Mathematical Models for the Prediction of Anthropogenic Visibility Impairment" (EPA-450/3-78-110 a, b, c). (FINAL), National Technical Information Service, 5285 Port Royal Rd., Springfield, Virginia 22161 (PB 293119, PB 293120, PB 293121).

Heavy-Duty Diesel Particulate Regulations (40 CFR Part 86*)

Legal Authority

The Clean Air Act, as amended, § 202, 206, 207, and 301, 42 U.S.C. §§ 7521, 7525, 7541, and 7601.

Reason for Including This Entry

The Environmental Protection Agency (EPA) thinks that this rule is important because it may have an annual effect of $100 million or more on the economy.

Statement of Problem

Despite significant gains made in the control of particulate emissions, there are still many regions of the U.S. which are not able to meet the National Ambient Air Quality Standards (NAAQS) for total suspended particulate matter (TSP). To help improve this situation, the Congress required EPA (through the Clean Air Act Amendments of 1977) to prescribe standards for the 1981 model year for the emission of particulate matter from heavy-duty diesel vehicles. EPA must base this standard on the lowest emission rates that we find technologically feasible at the time the standard will take effect, while also taking cost, noise, energy, and safety into consideration.

Diesel engines already power one-third of the heavy-duty vehicles sold in this country. By 1990, EPA expects this figure to increase to over two-thirds, primarily because of the fuel economy advantage of diesel engines over gasoline engines. These diesels emit 40–100 times the particulate matter emitted by catalyst-equipped vehicles operated on unleaded gasoline. (EPA expects that most gasoline-fueled heavy-duty vehicles will require catalysts and unleaded gasoline beginning in 1984 due to stringent standards for the emissions of hydrocarbons and carbon monoxide (see 45 FR 4136, January 21, 1980.) Heavy-duty diesel vehicles, if left uncontrolled, would emit 171,000–241,000 metric tons per year of particulate matter to the atmosphere by 1990. Urban areas would be the most seriously affected by these emissions. Ambient particulate levels from heavy-duty diesels alone would reach 2–7 micrograms per cubic meter (annual geometric mean) in cities such as Chicago, Los Angeles, New York, and Dallas. Somewhat smaller levels of 2–5 micrograms per cubic meter (annual geometric mean) would occur in smaller cities such as St. Louis, Denver, and Phoenix. These levels would occur over large-scale areas within these cities. Additional diesel particulate levels of 4–6 micrograms per cubic meter (annual geometric mean) would be expected in localized areas within 90 meters of very busy roadways. If controls are not applied, these ambient impacts would hinder the efforts of many urban air quality control regions to meet the primary NAAQS for TSP of 75 micrograms per cubic meter. This NAAQS was set at a level to protect the public health and many areas of the country are currently exceeding the standard.

Diesel particulate is of a particular health concern due to its chemical nature. Diesel particulate contains polycyclic organic matter, which is believed to be carcinogenic, and carbon,

which can synergistically increase the effects of other pollutants. The extractable organic fraction of diesel particulate has been shown to be mutagenic in short-term bioassays. EPA is currently performing a health assesment to determine the carcinogenic risk (if any) to human health.

Diesel particulate is also extremely small in size, allowing it to penetrate deeply into the lungs. Over 95 percent of diesel particulate is fine (aerodynamic diameter of less than 2.5 micrometers). Fine particles, such as these, have the greatest potential health impact as they have the longest contact with the most sensitive areas of the respiratory tract. Particulate emitted from diesels also has a greater relative exposure impact than that from many stationary sources because it is emitted at ground level in areas where people live and work.

Alternatives Under Consideration

EPA will consider the following alternatives when proposing a standard for particulate emissions from heavy-duty diesel vehicle engines.

(A) Do not regulate particulate emissions from heavy-duty diesel vehicles, but apply additional controls to particulate emissions from stationary sources. Control of particulate emissions from stationary sources may be less costly than controlling particulate emissions from heavy-duty diesel vehicles. But these stationary source controls could also be more costly and may not be able to provide the necessary improvements in air quality which are available from the control of heavy-duty diesel vehicles.

Do not regulate particulate emissions from heavy-duty diesel vehicles, but apply more stringent controls to particulate emissions from other classes of motor vehicles. Controls placed on these other vehicle classes may be more effective or less costly, than heavy-duty diesel controls. But controls placed on these other vehicle classes may be more costly and less effective, and may not be able to provide the same improvement in air quality as the regulation of emissions from heavy-duty diesels.

(C) Prescribe a heavy-duty diesel particulate standard and examine alternative levels of control along with alternative dates of implementation. It is likely that the different alternatives examined will have different costs and effectiveness and one may prove to be significantly better than the others, while still complying with Congressional mandates.

We currently regard alternative C as the most desirable alternative. Additional particulate controls available for stationary sources and other mobile sources do not appear able to reduce particulate emissions enough to remove the need for regulation of particulate emissions from heavy-duty diesel engines.

Summary of Benefits

Sectors Affected: The general public, particularly those living in urban areas or near busy roadways; those members of the public who are especially susceptible to respiratory disease; and those states containing areas currently in violation of the National Ambient Air Quality Standard (NAAQS) for total suspended particulate matter (TSP).

EPA estimates that this regulation will reduce particulate emissions from heavy-duty diesel vehicles by 50 to 75 percent. This reduction would begin to appear with those new vehicles produced in the 1985 model year. By 1990, emissions of particulate matter from these vehicles would be reduced from 171,000–241,000 metric tons per year (depending on the number of diesels on the road) to 71,000–147,000 metric tons per year. Urban levels of heavy-duty diesel particulate in the atmosphere would be reduced from 2–7 micrograms per cubic meter to 1–4 micrograms per cubic meter. Roadside levels would be reduced similarly. These reductions will help many areas of the country meet the primary NAAQS for TSP (75 micrograms per cubic meter) which EPA set at a level to protect the public health. Because diesel particulate is higly respirable, these reductions should provide an added benefit in the area of public health.

Also, because diesel particulate is very small (average diameter of 0.07–0.2 micrometer) and is primarily made up of carbon, they are very effective in reducing visibility. Thus, any reduction in their concentration should improve visibility, particularly in urban areas.

Summary of Costs

Sectors Affected: Manufacturers of heavy-duty diesel engines and vehicles; purchasers and users of heavy-duty diesel vehicles; and firms and individuals who ship freight via heavy-duty diesel vehicles.

This regulation probably will require the addition of emission control devices to heavy-duty diesel engines, though the actual devices used and their cost could vary from manufacturer to manufacturer and engine to engine. Manufacturers of these engines and the vehicles equipped with these engines will have to raise prices to recover their increased investment. While this increase could be substantial, very roughly a one-time purchase price increase of $200–$600 (1980 dollars), EPA does not expect this to adversely affect sales. This increase only represents a one to three percent increase in the price of a heavy-duty diesel vehicle.

EPA does not expect this regulation to increase the operating costs of heavy-duty diesel vehicles, in fact a decrease may actually be possible. Because operating costs comprise 90–95 percent of the total cost of owning and operating heavy-duty diesel vehicles, this regulation should have a negligible impact (less than 0.5 percent) on the cost of hauling freight in these vehicles. Thus, neither those whose business is hauling freight nor those who have their freight hauled should be adversely affected. Small, independent haulers should experience no disproportionate effect.

Related Regulations and Actions

Internal: 40 CFR Part 86, "Control of Air Pollution from New Motor Vehicles and New Motor Vehicle Engines: Certification and Test Procedures."

EPA is also in the process of revising the standard for the emissions of nitrogen oxides from both gasoline-fueled and diesel heavy-duty engines.

External: None.

Active Governmental Collaboration

None.

Gaseous Emission Regulations for 1983 and Later Model Year Light-Duty Trucks (40 CFR Part 86)*

Legal Authority

The Clean Air Act, as amended, §§ 202, 206, 207, and 301, 42 U.S.C. §§ 7521, 7525, 7541, and 7601.

Reason for Including This Entry

The Environmental Protection Agency thinks this rule is important because we expect it will have an annual economic impact of more than $100 million.

Statement of Problem

The Clean Air Act as amended in 1970 contained many provisions aimed at removing harmful pollutants from the air we breathe. Among other things, the 1970 Act called for the establishment of National Ambient Air Quality Standards. These levels were to be set such that there would be no danger to public health and welfare. To date, ambient-air quality standards have been set for five pollutants: particulate matter, sulfur dioxide (SO_2), carbon monoxide (CO), nitrogen dioxide (NO_2) and ozone (of which hydrocarbons (HC) is the main precursor). Of these five pollutants, mobile sources are major contributors to the total pollutants emitted for three: HC, CO, and NO_x. This regulation package concerns the

establishment of standards for HC and CO from light-duty trucks.

Both HC and CO emission have been related to adverse health effects. Briefly, HC emissions react with sunlight to form ozone and other photochemical oxidants. Ozone is a pulmonary irritant that affects the respiratory mucous membranes, other lung tissues, and respiratory functions. CO when inhaled replaces oxygen in the blood. The presence of CO adversely affects the carrying and delivering capacity of oxygen by the blood.

Although significant improvements have been made in air quality since 1970, a review of air quality monitoring data makes it clear that additional reductions in HC and CO emissions will be necessary if ambient air quality goals set by Congress in the Clean Air Act are to be achieved. On March 3, 1978, EPA published in the Federal Register a listing on a State-by-State, pollutant-by-pollutant basis, of the attainment status of every area of the Nation (43 FR 8962). This information, compiled by the respective States and reviewed by EPA, was the most accurate picture available of the nation's air quality status as of the adoption of the Clean Air Act Amendments. These data indicated that of 3215 counties or county equivalents covered by those designations, 607 (19 percent) were classified as nonattainment for photochemical oxidant, and 190 (6 percent) were classified as nonattainment for carbon monoxide. Nonattainment status indicates that the given area fails to meet the primary national ambient air quality standard (NAAQS) for the pollutant under consideration based upon either direct air quality monitoring or indirect estimates for areas lacking monitoring data. Current nonattainment data is available to indicate the changes which have occurred since 1977. As of July 1979, the nonattainment designations include 586 (18 percent) counties for ozone and 164 (5 percent) for carbon monoxide.

Light-duty trucks (LDTs) contribute a significant portion of the total nationwide emissions of HC and CO, yet to date we have not controlled LDTs to the stringency represented by existing light-duty vehicle (passenger cars only) standards which is greater than a 95 percent reduction of HC and CO from the uncontrolled state. Presently, LDTs contribute more than 16 percent and 15 percent of the total mobile source hydrocarbon and carbon monoxide emissions, respectively. If we impose no further control we project that they will contribute more than 20 percent of the hydrocarbon emissions and 29 percent of the carbon monoxide emissions in the urban areas of the United States by 1995.

In recognition of the above facts, the Clean Air Act, as amended in 1977, granted the Environmental Protection Agency the statutory authority to reduce HC and CO emissions from light-duty trucks by at least 90 percent (from uncontrolled levels).

Alternatives Under Consideration

In the broadest sense, the Environmental Protection Agency considered the following alternatives in proposing this action:

(A) Implement more stringent HC and CO standards than the minimum 90 percent reductions mandated by the Clean Air Act.

(B) Separate the light-duty truck class into two subcategories by weight (those under 6,000 pounds and those over 6,000 pounds gross vehicle weight (GVWR) and set separate standards for each).

(C) Implement HC and CO standards that represent a 90 percent reduction from baseline levels.

We did not consider less stringent control of HC and CO emissions from the 6,000 to 8,500 pounds GVWR group as an additional alternative since the Clean Air Act requires at least a 90 percent reduction in 1983. We may only consider alternatives involving less stringent standards if we determine that the technological infeasibility provisions of § 202(a)(3)(C) of the Act apply. EPA did not find the conditions existed to justify less stringent standards.

EPA did not seriously consider standards more stringent than the 90 percent reductions (alternative A) because Congress had determined that these levels were reasonable reductions achievable on the specified schedule with current control technology. Both EPA and the manufacturers provided Congress with the information necessary to arrive at these mandated reductions. Also, the extremely short timetable for promulgating the new standards hindered EPA's ability to fully examine the alternative of more stringent standards. EPA will continue looking into the feasibility of promulgating more stringent standards if necessary.

It would be possible to divide the LDT class into smaller categories based upon finer divisions in GVWR, curb weight, or other features (alternative B). Presently, LDTs with the least technological potential for emission reductions (generally those with the highest inertia weights and roadloads) constrain the stringency of the emission standards for the entire class. By subdividing the class, we could set more stringent standards for the smaller LDTs.

We could see a greater reduction in total emissions from the light-duty truck class if we adopted this alternative. However, such an approach would take away some of the manufacturers' incentive to reduce LDT weight and thus improve fuel economy. Because of these foregone fuel economy benefits and also leadtime constraints, EPA is postponing consideration of this alternative.

Alternative C is the alternative that EPA proposes. The Agency has determined that the 90 percent reductions in HC and CO are achievable at a reasonable cost. We anticipate there will be no associated fuel economy penalties with the application of electronic engine controls (EECs). The use of EECs will be due to increased market pressures and fuel economy regulations.

Summary of Benefits

Sectors Affected: Air Quality in Urban areas and general public in those areas.

EPA's environmental impact analysis indicates that the proposed regulations will reduce the lifetime emissions of an average LDT by 76 percent for HC and 82 percent for CO. Based on a cross section of urban areas experiencing air quality problems, these reductions in per vehicle emissions will by 1995 yield improvements of 1 to 2 percent in average ozone air quality and 3 to 4 percent in average carbon monoxide air quality.

Summary of Costs

Sectors Affected: Light-duty truck manufacturers; purchasers of light-duty trucks; business; and government.

EPA estimates that compliance with the proposed 1983 requirements will increase the average purchase price of a light-duty truck by approximately $95 (in 1980 dollars) which is a 1 percent to 2 percent increase to the average purchase price. We do not anticipate any increase in operating or maintenance costs.

The estimated increase in the average price of a light-duty truck will contribute about 0.0075 percentage points to the rate of increase in the Consumer Price Index, an indicator of general price levels of products purchased by consumers during 1983. This very slight increase is not inflationary.

The estimated aggregate cost of compliance to the nation for the five-year period 1983 through 1987 is $1.28 billion (in 1980 dollars). This figure is the aggregate cost, based on a discount rate of 10 percent, to the beginning of the five-year period. Use of a discount rate emphasizes that because of the time

value of money, a cost incurred now is worth more to the nation than a cost incurred in the future.

Related Regulations and Actions

Internal: Current emission standards for light-duty trucks are found in "Control of Air Pollution from New Motor Vehicles and New Motor Vehicle Engines: Certification and Test Procedures," 40 CFR Part 86. Regulations implementing the Department of Transportation light-duty truck fuel economy standards are found in "Fuel Economy of Motor Vehicles," 40 CFR Part 600.

EPA has recently finalized standards and measurement procedures for the control of particulate emissions from diesel-fueled light-duty trucks ("Standard for Emission or Particulate Regulation for Diesel-Fueled Light-Duty Vehicles and Light-Duty Trucks," 45 FR 14496, March 5, 1980). Other related regulations we recently finalized are HC and CO emission regulations for 1984 and later model year heavy-duty vehicles. These regulations are very similar to the light-duty truck proposal we describe here, in that they finalized HC and CO standards representing 90 percent reductions from uncontrolled levels. Further information is available in "Gaseous Emission Regulations for 1984 and Later Model Year Heavy-Duty Engines," 45 FR 4136, January 21, 1980.

In addition to the existing regulations above, EPA is in the process of developing revised oxides of nitrogen standards for light-duty trucks effective in the 1985 model year.

External: Light-duty vehicle and light-duty truck fuel economy standards are found in the Department of Transportation "Passenger Automobile Average Fuel Economy Standards," 41 CFR Part 531.

Active Government Collaboration

Department of Transportation, Council on Wage and Price Stability, Department of Commerce.

Available Documents

NPRM—44 FR 40784, July 12, 1979

Draft, Regulatory Analysis and Environmental Impact of Final Emission Regulations for 1983 and Later Model Year Light-Duty Trucks.

Public Docket OMSAPC-79-2 (LDT Rulemaking)

Public Docket OMSAPC-78-4 (1984 HDT HC and CO Rulemaking)

All documents can be inspected and copied at the U.S. Environmental Protection Agency, Central Docket Section, Waterside Mall, Room 2903B, 401 M Street S.W., Washington, D.C. 20460.

Gaseous Emission Regulations for 1985 and Later Model Year Light-Duty Trucks and Heavy-Duty Engines (40 CFR Part 86*)

Legal Authority

The Clean Air Act, as amended, § 202, 42 U.S.C. § 7521.

Reason for Including This Entry

The Environmental Protection Agency thinks this rule is important because we expect it will have an annual economic impact of more than $100 million.

Statement of Problem

The Clean Air Act Amendments of 1977 mandate the establishment of regulations which require a reduction (from the uncontrolled state) of heavy-duty engine or vehicle emissions of 90 percent for hydrocarbon (HC) and carbon monoxide (CO) in 1983 and 75 percent for oxides of nitrogen (NOx) in 1985. As defined in the Act, heavy-duty vehicles include those trucks over 6,000 pounds gross vehicle weight (GVW); excluded are off-road vehicles such as farm tractors and construction equipment. This definition overlaps two truck categories as used by EPA. These are light-duty trucks (LDTs) which EPA defines as trucks up to 8,500 pounds GVW, and heavy-duty vehicles (HDVs) which includes the 8,500 pounds GVW and over trucks. Regulations implementing the mandated reductions in HC and CO emissions were published on January 21, 1980 (45 FR 4136) for HDVs and are in the process of being finalized for LDTs.

During high temperature combustion in internal combustion engines, atmospheric nitrogen reacts to form nitrous oxide (NO) and a comparatively small amount of nitrogen dioxide (NO_2). In the atmosphere, the NO is converted to NO_2 by direct reaction with oxygen and by photochemical processes. NO_2 in the atmosphere causes visibility restrictions and brownish coloration. Elevated NO_2 levels are also associated with both long-term and short-term health effects on the respiratory system.

Based upon the present annual standard of 0.05 parts per million, EPA has identified several (8 or less) Air Quality Control Regions which are currently exceeding acceptable levels. EPA's analysis of future oxides of nitrogen (NOx) emissions indicates that current light-duty and heavy-duty vehicle NOx control strategies will produce some overall NOx reductions through the mid-1980's, after which annual growth of vehicle sales, industry, and other sources contributing to pollution will begin to dominate. Thus, to even maintain the status quo, further NOx controls will be needed. Heavy-duty vehicles and light-duty trucks, representing approximately 40 percent of mobile source NOx emissions, constitute one area where further, in addition to already existing, NOx control is available on a cost-effective basis. Mobile sources themselves constitute about 30 percent of total NOx emissions.

The Clean Air Act Amendments of 1977 mandate the establishment of regulations which require a reduction of heavy-duty engine emissions by 75 percent for NOx beginning in 1985. These amendments also provide EPA with options to either temporarily revise or change the standards under certain conditions.

Alternatives Under Consideration

In the development of the NOx standard EPA will consider the following alternatives.

(A) Implement an oxides of nitrogen standard that reflects the Clean Air Act's mandated 75 percent reduction.

(B) Implement an oxides of nitrogen standard that is either less stringent or more stringent than the 75 percent reduction required by the Clean Air Act.

(C) Establish a corporate average standard which would allow a manufacturer to average in some way the fleet emissions of oxides of nitrogen. The average emission level, rather that the specific emission level of each vehicle or engine, would have to meet the standard.

With regard to alternatives A and B, EPA is currently evaluating the advantages and disadvantages of both alternatives. The Clean Air Act (as amended August 1977) directs EPA to set an oxides of nitrogen standard that reflects a 75 percent reduction (from uncontrolled levels) applicable for the 1985 model year. However, provisions are incorporated in the Act allowing EPA either to set more stringent standards or less stringent standards. EPA can make such revisions to the standard if it finds that the emission standards cannot be achieved by available technology at reasonable cost. Of course, as standards are made more stringent, more benefits will accure. Likewise as standards become more stringent costs of compliance will generally increase. The task confronting EPA is one of determining technological capabilities, and balancing costs and benefits.

EPA is considering alternative C as a means of obtaining necessary NOx reductions, and at the same time allowing greater flexibility to the manufacturers in complying with emission standards. Under an averaging

approach a manufacturer could achieve compliance to an emission standard by averaging its aggregate fleet emissions. Some engines could be designed to be below the standard and others above it. Conceptually, this approach could increase a manufacturer's flexibility from both a technology and an economic standpoint. there are some disadvatnages to such an approach that still need attention, principally they are the basic inconsistencies of such an approach with the requirements of the Clean Air Act, the complexity of enforcement, and the inherent inequities between manufacturers of different total sales and products.

At the present time the Agency considers alternative A as the most likely option to propose. However, we will continue to address issues such as technological capability and cost in the development of the final rule. It is possible that after analyzing manufacturers' comments, EPA will reconsider alternative B. It is also quite probable that EPA will pursue alternative C further in the proposal. Specifically, EPA may solicit comments and suggested approaches to an averaging standard to help the Agency in further evaluation of such an approach to mobile source emission control.

Summary of Benefits

Sectors Affected: Urban areas and associated populations.

Although a thorough and detailed benefit analysis has not been performed yet, we can roughly estimate the environmental impact. A proposed NOx standard representing a 75 percent reduction from uncontrolled levels would reduce lifetime emissions of an average light-duty truck by 500 pounds and of an average heavy-duty vehicle by approximately 1 ton and 7 tons for gas and diesel, respectively (compared to vehicles sold under present regulations). These reductions will yield improvements in excess of 10 percent in average NOx air quality by 1995.

Summary of Costs

Sectors Affected: Manufacturers of heavy-duty engines and vehicles, and light-duty trucks; purchasers and users of heavy-duty engines and vehicles, and light-duty trucks.

This regulation will require the addition of engine emission control hardware and/or engine modifications in order to comply with the proposed NOx standard. Consequently, to cover the cost of any new hardware or engine modification, manufacturers will have to increase the price of their products. Although precise cost estimates are not available at this time, it is projected that the average price increases of a light-duty truck of gasoline-fueled heavy-duty vehicle may be as high as $250 (in 1980 dollars). Diesel heavy-duty vehicle first cost increases could be more than $200 (in 1980 dollars) or less than 1 percent of the total cost per vehicle. Slight increases in maintenance costs may result, however no estimates are available at this time.

Related Regulations and Actions

Internal: Current emission standards for light-duty trucks and heavy-duty engines can be found in "Control of Air Pollution from New Motor Vehicles and New Motor Vehicle Engines: Certification and Test Procedures," 40 CFR Part 86. Regulations implementing the Department of Transportation light-duty truck fuel economy standards are found in "Fuel Economy of Motor Vehicles," 40 CFR Part 600.

EPA has recently finalized standards and measurement procedures for the control of particulate emissions for diesel-fueled light-duty trucks ("Standard for Emission of Particulate Regulation for Diesel-Fueled Light-Duty Vehicles and Light-Duty Trucks," 45 FR 14496, March 5, 1980). Another related regulation recently finalized are HC and CO emission regulations for 1984 and later model year heavy-duty vehicles. For further information consult "Gaseous Emission Regulations for 1984 and Later Model Year Heavy-Duty Engines," 45 FR 4136, January 21, 1980.

In addition to the existing regulations above, EPA is in the process of finalizing more stringent hydrocarbon and carbon monoxide standards for light-duty trucks, and developing particulate regulations for heavy-duty diesel engines.

External: Light-duty vehicle and light-duty truck fuel economy standards are found in the Department of Transportation "Passenger Automobile Average Fuel Economy Standards," 41 CFR Part—

Active Government Collaboration

Department of Transportation, Council on Wage and Price Stability, Department of Commerce.

Available Documents

None at this time.

Fuels and Fuel Additives (40 CFR Part 79*)

Legal Authority

The Clean Air Act, as amended, § 211, 42 U.S.C. § 7545.

Reason for Including This Entry

The Environmental Protection Agency (EPA) thinks that this rule is important because it may have a marked effect on the way fuels and fuel additives are developed and marketed. While this rule may not have an annual impact of $100 million or more, the synthetic fuel and fuel additive areas will be active ones in the future as the nation attempts to lessen its dependence on foreign oil.

Statement of Problem

In 1977, Congress amended the Clean Air Act and added § 211(e) to the Act, which requires the Environmental Protection Agency (EPA) to develop regulations to test the environmental and health effects of fuels and fuel additives. Section 211(e)(2) establishes deadlines by which the manufacturer must provide the requisite information to the EPA Administrator. Section 211(e)(3) authorizes the administrator to: (1) exempt small businesses from the regulations, (2) provide for sharing of testing costs among manufacturers who desire to register identical compounds, and (3) exempt businesses from duplicative testing requirements.

The present registration regulation requires that manufacturers submit certain information on the chemical composition and the toxicity of fuels and fuel additives to the extent this information is known to the manufacturer as the result of testing conducted for reasons other than fuel registration (40 CFR 79.31(c)).

The proposed action may require the manufacturer to perform certain physical, chemical, and biological testing of fuels and fuel additives before registration.

Alternatives Under Consideration

Our preferred alternative is to require testing on a tier basis. This approach would require manufacturers to report the chemical composition of all candidate fuels and fuel additives. If, based on chemical composition, EPA can make a determination that the environmental and health impacts are insignificant, further testing may not be required.

The second alternative would require full testing for all fuels and fuel additives with no exemptions. Approximately 2,000 fuels and fuel additives would require full environmental and health testing. This alternative would be unnecessarily costly, since many fuels and fuel additives whose environmental impact we can predict to be small or negligible will have to be tested.

The third alternative would be to submit regulated pollutants only (NOx, CO, hydrocarbons) to registration and performance testing but not to health or environmental testing. This is the present system as required by 40 CFR 79 but which the Congress changed.

Summary of Benefits

Sectors Affected: The general public, particularly those living in urban areas where the concentration of vehicles is greatest; and those people who live near or work in plants which produce fuels or fuel additives.

The benefits we expect from this regulation is the protection of public health. Those fuels and fuel additives and the products of their combustion, which may be harmful to public health, will be identified and eliminated from the market place, where appropriated.

We cannot estimate the economic benefits, in terms of reduction in respiratory and other diseases, at this time. However, because of the current cost of medical services and because of the generally accepted view that prevention is preferable to treatment of diseases, the expected economic and social benefits, although they are not quantifiable at this time, should be significant.

Summary of Costs

Sectors Affected: The petroleum industry; the automotive industry; and the users of motor vehicles or their services (to the extent that regulatory costs would be passed on to consumers). Small businesses would be exempt from the most costly tests.

There are over 2,000 fuels and fuel additives presently registered under § 211 of the Clean Air Act. We estimate that approximately 200 of these will require some degree of testing by the manufacturers. The cost to the industry of implementing these tests should be between $90 and $120 million. These costs will be distributed over the first three years of regulation, because by law all fuels and fuel additives must meet the testing requirements within three years of the date of promulgation of this regulation.

Related Regulations and Actions

Internal: 40 CFR Part 79, "Fuels and Fuel Additives Registration;"

40 CFR Parts 161, 162 and 163, "Proposed Guidelines for Registration of Pesticides;"

40 CFR Part 772, "Toxic Substances Control Act, § 4, Carcinogen Protocols and Chronic Toxicity Protocols;" and

40 CFR Part 50, "Ambient Air Quality Standards."

External: None.

Active Government Collaboration

Health testing protocols will be submitted to the Interagency Regulatory Liaison Group for screening before the regulation is promulgated.

Comments may be sent to:

Charles L. Gray, Jr., Director, Emission Control Technology Division, Environmental Protection Agency, 2565 Plymouth Road, Ann Arbor, MI 48105

Final Rule—July, 1982

Final Rule Effective—Three years after promulgation of regulation.

Available Documents

"Testing for Health Effects on Fuels and Fuel Additives" by Gause, et al., Environmental Monitoring Systems Laboratory, Research Triangle Park, NC 27711.

Test Plan to "Study the Effect of MMT on Emissions as a Function of Fuel and Additive Composition," EPA-600/2-750048, September 1975.

ANPRM—43 FR 38607, August 29, 1978, EPA docket ORD-78-1.

All documents available for review at the EPA, Central Docket Section, Waterside Mall, Room 2903B, 401 M Street SW., Washington, D.C. 20460. The documents are available for personal inspection or copies can be obtained by personal or written request. A reasonable fee may be charged for copying.

Control of Organic Chemicals in Drinking Water 40 CFR, Part 141

Legal Authority

The Safe Drinking Water Act, as amended, § 1412, 42 U.S.C. § 300(f) *et seq.*

Reasons for Including This Entry

Regulation is likely to impose costs of over $100 million.

Statement of Problem

Recent technological developments in sophisticated analytical measurement techniques have resulted in the identification of numerous organic contaminants in drinking water that may pose a health risk to consumers. On November 29, 1979, EPA published regulations designed to control one class of these organic chemicals, the trihalomethanes (THMs). Future measures to control organic chemicals in drinking water are proceeding through two related approaches:

I. Treatment Technique Requirement for the Control of Synthetic Organic Chemicals—to be reproposed, Late 1980 to early 1981.

II. Control of volatile organics in drinking water; to be proposed, Late Summer 1980.

I. Treatment Technique Requirement: Synthetic Organic Chemicals

Synthetic organic chemicals are chemicals which enter sources of drinking wager as a result of industrial discharges, spills, sewage discharge and urban and rural rainwater runnoff (non-point sources). Some of these organic chemicals are either known or suspected carcinogens. The list of synthetic organic chemical contaminants that have been found at least once in drinking water has grown to over 900. Because of the technical infeasibility of controlling every synthetic organic contaminant individually by setting an MCL, EPA has determined that control of a broad spectrum of organic chemicals by a treatment technique (granular activiated carbon) or equivalent technology would be appropriate in certain locations where substantial risk of contamination exists. The intent of these regulations is to improve the quality of drinking water at the tap and reduce the health risk to the public from long term exposures to synthetic organic chemicals in drinking water. This proposal would amend EPA's National Interim Primary Drinking Water Regulations (NIPDWR), or equivalent regulations adopted by the States, which apply to all public water systems in the United States.

Alternatives Under Consideration

The alternatives being considered include requirements for community water systems to install granular activated carbon treatment (GAC), or its equivalent, if they serve more than 10,000 people and use sources of drinking water which are vulnerable to contamination by synthetic organic chemicals. The reproposed regulations will consider, among other possibilities, changes in the application of the GAC technology, in that the GAC requirement might be achieved by replacing sand with GAC in existing filter beds, and the frequency of reactivation (removal of adsorbed organic chemicals from the GAC) of the GAC would be specified in the regulations. Frequencies for reactivation of the GAC under consideration range from six months to one year.

Since the original proposal, criteria for determining which public water systems are vulnerable to contamination by synthetic organic chemicals have been re-evaluated and the reproposed regulations may specify rivers or stream segments that are considered to be subject to such contamination. These

water sources will be chosen through an evaluation of the number and type of industrial/municipal discharges upstream of drinking water intakes, an estimate of the transportation of industrial and agricultural chemicals on the water way and the potential contamination by non-point sources (e.g., urban runoff).

Summary of Benefits

Sectors Affected: The sectors affected include the American public in general, municipally and privately owned public water systems and all segments of the water supply industry, including consulting sanitary engineers, analytical chemists, plant operators, equipment manufacturers and suppliers.

The reproposed treatment technique for control of synthetic organic chemicals will provide protection to a larger population at a lower per capita cost (upwards of 80 percent of the American population at a per capita cost of $2.60 to $7.10) than would the original proposal (52 percent of the population and $7.10 to $26.10, respectively). The reproposed technique provides broad spectrum protection from synthetic organic contaminants and could be implemented two to three years earlier than the original proposal.

Summary of Costs

Sectors Affected: The sectors affected include the American public in general, state and local governments, public water systems (both privately and publicly owned).

The estimated total national capital cost to implement this reproposal is $333 million over three years (in 1980 dollars). It is estimated that such expenditures will increase local water rates by approximately $5 per year per family of three in those communities whose water supply system would install GAC facilities.

Related Regulations and Actions

Internal: All EPA regulations that affect control of chemical contamination of water would be indirectly related, including: Effluent Guidelines, National Pollution Discharge Elimination System, and Water Quality Criteria.

External: State programs would deal with decisions on variances and exemptions from the regulations, and would provide technical assistance to public water systems making changes in their treatment processes.

Active Government Collaboration

Supporting documentation for the health basis of the proposed regulation requires information-sharing with the National Cancer Institute, National Institute of Environmental Health Sciences, Consumer Products Safety Commission, Occupational Safety and Health Administration, and the Food and Drug Administration. Also, we have gained data supporting development of criteria to determine if public water systems are vulnerable to contamination by synthetic organic chemicals through cooperation with the Coast Guard, Department of Transportation, and the Department of Commerce.

Available Documents

ANPRM—41 FR 28991, July 14, 1976

"Drinking Water and Health," National Academy of Sciences, 1977.

"National Organics Reconnaissance Survey," EPA, Municipal Environmental Research Laboratory, 1975.

"National Organics Monitoring Survey," EPA, Office of Drinking Water.

"Statement of Basis and Purpose for an Amendment to the National Interim Primary Drinking Water Regulations on a Treatment Technique for Synthetic Organic Chemicals," EPA, Office of Drinking Water, 1977.

"Economic Analysis of Proposed Regulations on Organic Contaminants in Drinking Water," EPA, Office of Drinking Water, 1977.

"Draft Interim Treatment Guide for the Control of Synthetic Organic Contaminants in Drinking Water Using Granular Activated Carbon," EPA, Municipal Environmental Research Laboratory, 1978.

"Revised Economic Impact Analysis of Proposed Regulations on Organic Contaminants in Drinking Water," EPA, Office of Drinking Water, 1978.

"Operational Aspects of Granular Activated Carbon Adsorption Treatment," EPA, Municipal Environmental Research Laboratory, 1978.

NPRM—43 FR 5766, February 9, 1978.

National Academy of Sciences Study on Granular Activated Carbon, 1979.

Agency contact:

Joseph A. Cotruvo, Ph.D., Director Criteria and Standards Division, Office of Drinking Water (WH-550), Environmental Protection Agency, Washington, D.C. 20460 (202) 472-5016

II. Control of Volatile Organics in Drinking Water

Recent information indicates that a number of volatile organic chemicals exist in both raw and finished drinking waters, particularly in ground water supplies which have been contaminated by improper waste disposal practices. Accordingly, revisions to the existing NIPDWR will be proposed to include MCLs for certain volatile organic chemicals. At this time, contamination of drinking water by the volatile organics has been found to be most serious in ground waters in urbanized and industrial areas. The levels of occurrence, coupled with the suspected carcinogenicity and toxicity of several identified compounds, appear to support the setting of MCLs for several of the following compounds:

- Trichloroethylene
- Carbon tetrachloride
- Tetrachloroethylene
- 1,2-Dichloroethane
- 1,1,1-Trichloroethane
- 1,1-Dichloroethane
- Dichloroethylenes (3)
- Methylene chloride
- Vinyl chloride

If EPA takes no action with regard to the above chemicals, a possible health risk to the public will continue to exist and the overall quality of drinking water will be suspect in those ground water areas.

Alternatives Under Consideration

Specific options are being developed and alternatives will be separately evaluated for each contaminant. MCLs will be proposed only after careful evaluation of the best available evidence in the areas of epidemiology, toxicology, analytical methods, quality assurance, monitoring requirements, feasibility and efficiency of competing treatment methods and economic impacts. MCLs are now being developed for the following compounds: trichloroethylene, carbon tetrachloride, tetrachloroethylene, 1,2-dichloroethane, 1,1,1-trichloroethane, and vinyl chloride.

Summary of Benefits

Sectors Affected: The sectors affected include the American public in general, municipally and privately owned public water supply systems and all segments of the water supply industry, including consulting sanitary engineers, analytical chemists, plant operators, equipment manufacturers and supplies.

These MCLs will have their greatest impact on small water supply systems which currently employ little or no treatment. The public served by such systems will, in particular, realize the benefits of this proposal.

Value of Benefits: It is impossible at this time to assign direct monetary values to the benefits to be realized under this proposal. Such benefits include a lessening of public exposure to toxic substances in drinking water and a consequent safeguarding of public health.

Summary of Costs

Sectors Affected: The sectors affected include the American public in general, state and local governments in particular, public water supply systems (both privately and publicly owned).

The public in general will be the principal group affected by this proposal, since the users will undoubtedly bear the costs of any necessary modifications to their water supply systems. This will particularly be true for users of small water supply systems which currently employ little or no treatment.

Value of Costs: No estimates of the economic impact are available at this time.

Related Regulations and Actions

Internal: All EPA regulations that affect control of chemical contaminants of water are indirectly related, including: Effluent Guidelines, National Pollution Discharge Elimination System, Water Quality Criteria and Hazardous Waste Disposal Controls.

External: State programs would be expected to deal with decisions on variances and exemptions from the regulations and to provide technical assistance to public water systems making changes in their treatment processes.

Active Government Collaboration

Supporting documentation for the health basis of any proposed regulation requires information-sharing with the National Cancer Institute, National Institute of Environmental Health Sciences, Consumer Products Safety Commission and the Food and Drug Administration. In addition, the National Academy of Sciences and the National Drinking Water Advisory Council will be consulted during the MCL development.

Timetable

Proposed Rule—Late Summer 1980
Public hearing (to be announced)—Late Fall 1980
Final Rule—Summer 1981

Available Documents

"National Organics Reconnaissance Survey," EPA, Municipal Environmental Research Laboratory, 1975.

"National Organics Monitoring Survey," EPA, Office of Drinking Water.

"Interim Treatment Guide for Controlling Organic Contaminants in Drinking Water Using Granular Activated Carbon," EPA, Municipal Environmental Research Laboratory, January, 1978.

"Occurrence of Volatiles in Drinking Water," EPA, ODW, Criteria and Standards Division, March 1980.

Pesticide Registration Guidelines (40 CFR Part 163, Subparts A–P)

Legal Authority

Federal Insecticide, Fungicide, and Rodenticide Act (FIFRA), 7 U.S.C. § 136a(c)(2)(A), 136f, 136w (1978).

Reason for Including This Entry

The Environmental Protection Agency (EPA) estimates that cost to registrants (principally chemical companies whose products are registered or who apply for registration of their products) will be approximately $1.4 billion over the next ten years to meet the Guidelines requirements.

Statement of Problem

With certain limited exceptions, EPA must, in accordance with FIFRA, register all pesticides before manufacturers and formulators can legally distribute and sell them in the United States. The purpose of requiring registration of a pesticide is to permit EPA to determine if: (A) its composition is such as to warrant the proposed claims for it; (B) its labeling and other material required to be submitted comply with the requirements of the Act; (C) it will perform its intended function without unreasonable adverse effects on the environment; and (D) when used in accordance with widespread and commonly recognized practice it will not generally cause unreasonable adverse effects on the environment.

FIFRA expressly requires the EPA Administrator to publish Guidelines to specify the kinds of information required to support a registration application. Our proposed Guidelines specify the health and safety data that registrants of different types of pesticide products must submit, and the testing methods to be used in developing these data.

Prospective registrants (primarily pesticide manufacturers and formulators) are responsible for both the testing and submittal of test results to the Agency in support of their registration applications.

In addition, FIFRA expressly requires that currently-registered pesticides be reregistered expeditiously. In many cases, the registrants of these pesticides will now have to submit health and safety data that meets FIFRA requirements, either because they had not previously submitted the data or because they had submitted inadequate data.

Without these Guidelines, the following problems would inevitably result: registration applications would often be incomplete or inadequate, applicants would spend unnecessary time and money because requirements were not delineated or clarified, and EPA would not be able to perform registration reviews efficiently. These are the problems that existed before the proposed Guidelines were first published.

Alternatives Under Consideration

Section 3(c)(2)(A) of FIFRA requires that "The Administrator shall publish guidelines specifying the kinds of information which will be required to support the registration of a pesticide and shall revise such guidelines from time to time." Therefore, we are not considering alternatives to publication of the Guidelines. The Agency is analyzing public comments on the portions already proposed (see "Available Documents") and is considering these comments to improve the nature and clarity of the proposed data and testing requirements.

Summary of Benefits

Sectors Affected: The Guidelines will affect pesticide chemical manufacturers and formulators, principally. The chemical/biological testing industry will also be affected. In addition, EPA, farmers, and the general public will be affected.

Benefits: The Guidelines will give prospective registrants the benefit of knowing precisely what kinds of data the Agency requires (though there are some provisions for waiving some requirements under some circumstances). Manufacturers and formulators therefore will be able to plan their research and development programs with greater certainty and thereby save money and time. The chemical/biological testing industry will also benefit from increased business due to some additional requirements and due to the standardized requirements that improve planning and efficiency. The Guidelines will benefit the Agency by improving the quality of data available for decisionmaking, and also by allowing for more efficient processing of applications. Farmers and the general public will benefit generally from having safer pesticides available.

Summary of Costs

Sectors Affected: The Guidelines will affect pesticide chemical manufacturers and formulators, principally. Farmers and the general public will also be affected.

Costs: EPA estimates that, to meet the Guidelines requirements over the next ten years, it will cost registrants approximately $336 million for the data call-in program, $273 million in remaining data for registration standards, $600 million for data to support new registrations, and about $150 million for data to be required by those subparts of the Guidelines yet to be proposed. (The annual costs would be slightly higher during the first five years than during the latter five years.)

The projected cost represents expenditures for conducting laboratory and field testing, and developing the reports of such tests. While registrants will initially bear the cost, we expect that the cost will be passed on to the pesticide users, with farmers as the major users. The per-farm cost was estimated in 1978 to be $45–50 per year, which included $15 due to costs of new requirements in the Guidelines.

We do not expect these Guidelines to have any significant effect on employment in the pesticide industry, or to have any other nationally-significant economic effects. We do expect producers of some pesticides of small economic significance to withdraw their products from the market rather than go to the cost of developing the required data. In this situation, consumers, including farmers, will ordinarily choose other available pesticides rather than have no pesticide for the pest control use.

Related Regulations and Actions

Internal: EPA also is developing testing standards for chemical substances and mixtures under the Toxic Substances Control Act (TSCA). As far as possible, EPA will make the pesticide testing method prescribed by the Guidelines consistent with the TSCA testing standards. The Good Laboratory Practice standards we are developing under TSCA and FIFRA, which prescribe uniform standards of performance for toxicological testing, will also be consistent.

External: Under the aegis of the Interagency Regulatory Liaison Group, five Federal agencies (EPA, the Food and Drug Administration, the Occupational Safety and Health Administration, the Consumer Product Safety Commission, and the Department of Agriculture) are jointly developing guidelines describing test methods and standards that will meet all five agencies' needs.

Active Government Collaboration

Agencies and other government groups that we have consulted or have provided assistance in Guidelines development include members of the Interagency Regulatory Liaison Group, the National Cancer Institute, the Department of the Interior, and the Department of Agriculture. The latter Department is required by FIFRA to comment on proposed and final regulatory documents.

Regulatory Analysis

An economic impact analysis on those portions of the Guidelines was published in 1978: "Economic Impact Analysis of Guidelines for Registering Pesticides in the U.S.", 43 FR 39644, September 6, 1978. This analysis covered the costs of those subparts (Subparts B, D, E, and F) that would elicit about 90% of the total costs of the Guidelines. With the publication of each subsequent subpart, we will make available brief analyses set in the context of the incremental and total costs of the Guidelines. Following or concurrent with the publication of most subparts as final rules we will publish an overall regulatory analysis for the entire Guidelines.

Available Documents

We have published the following portions of the Guidelines as NPRM:

Subpart B—Introduction, 43 FR 29606, July 10, 1978. (This subpart will become Subpart A when published final.)

Subpart C—Registration Procedures (interim final), 40 FR 41788, September 9, 1975.

Subpart D—Chemistry Requirements, 43 FR 29696, July 10, 1978. (This subpart will be divided into three subparts when published final: D—Product Chemistry, N—Environmental Fate, and O—Residue Chemistry.)

Subpart E—Hazard Evaluation: Wildlife and Aquatic Organisms, 43 FR 29696, July 10, 1978.

Subpart F—Hazard Evaluation: Humans and Domestic Animals, 43 FR 37336, August 22, 1978.

Subpart F—Hazard Evaluation: Humans and Domestic Animals, two additional general sections on good laboratory practices for toxicology testing, 45 FR 26373, April 18, 1980. (This proposal will be separated from Subpart F when developed into a final rule.)

Environmental Radiation Protection Standards for Management and Disposal of Spent Nuclear Fuel, High-Level and Transuranic Radioactive Wastes (40 CFR Part 191)

Legal Authority

Atomic Energy Act of 1954, as amended 42 USC § 2201(b)

Reasons for Including This Entry

The Environmental Protection Agency (EPA) thinks this rule is important because it is a critical step towards developing disposal methods for high-level and other long-lived radioactive wastes which are now unregulated and would pose serious health problems to current and future generations of people. In addition, we estimated that the cost for implementing these standards will exceed 100 million (1978 dollars).

Statement of Problem

It is important to ensure proper management and disposal of high-level radioactive wastes because they represent a significant health risk to the population of the United States. At present, 70 million gallons of high-level defense wastes are stored in various liquid and solid forms on three Federal reservations in the States of Idaho, South Carolina and Washington. Nuclear fuel rods, after having been used to generate electrical power, are removed from the reactor and are referred to as spent fuel. The current inventory of spent fuel is about 6,000 tons. The spent fuel is being temporarily stored in holding ponds at the sites of nuclear power plants. Over the next few years this spent fuel inventory is expected to grow at a rate of about 600 tons per year from reactors currently licensed to operate. EPA estimates that by issuing these standards, cancer deaths resulting from these wastes will be limited to less than 10 per 100 years over the first 10,000 years after the wastes are disposed.

Our program to develop these standards began in 1976 as part of an interagency effort to speed up development and demonstration of a high-level waste repository. The program was announced as part of President's Ford's Nuclear Waste Management Plan on October 27, 1976. President Carter established an Interagency Review Group (IRG) on Waste Management in March 1978 to review existing programs and recommend new policies where necessary. After holding several public hearings on its draft report, the IRG prepared a final report to the President in March 1979. This report recommended that EPA accelerate its programs to set standards for nuclear waste management and disposal activities. President Carter approved this recommendation as part of his Program on Radioactive Waste Management which he announced on February 12, 1980.

If EPA took no action this would further delay the Federal waste

management program and could have significant environmental consequences. Delay in developing disposal methods results in longer storage of existing wastes in surface facilities requiring human control. Such storage is not necessarily a danger under normal conditions. The wastes, however, are more vulnerable to accidental release in surface storage than they would be in disposal facilities. The chances for environmental damage are greater the longer the wastes are stored in existing sites. Furthermore, the lack of a solution to this problem has caused serious uncertainty about the future use of nuclear energy in the United States. This uncertainty makes both national and local energy policy more difficult and has many indirect adverse economic and environmental effects.

Alternatives Under Consideration

The disposal system for high-level radioactive waste has yet to be designed and demonstrated. As a result, we are evaluating two basic types of environmental protection standards.

Option A We could develop a standard establishing general principles to govern disposal methods without setting quantitative standards. These principles would specify broad design requirements for disposal systems such as: (1) designing multiple man-made barriers and using natural barriers to prevent release of the wastes, (2) disposing of the wastes so that future generations could recover and relocate them, if necessary, and (3) designing disposal systems to reduce potential releases to the lowest levels reasonably achievable. Such requirements would reduce some of the uncertainties of the disposal systems to be developed which must work for very long times. However, they would not place any clear limit on expected environmental effects.

Option B We could set numerical performance requirements for disposal systems without using general principles like those discussed in Option A. These environmental protection standards would then be compared against the predicted performance of a proposed disposal system to determine whether the system should be approved. Such an approach would allow complete flexibility in meeting the objectives, however, it would rely upon predictions over very long time periods and such predictions involve many uncertainties.

Option C Combine both types of standards discussed above. This will require long-term predictions of disposal system performance to determine if environmental protection objectives are met. The general principles will require conservative design approaches which will protect the environment as much as possible even if these long-term predictions are wrong.

We believe that Option C provides the most reliable protection of the general population and the environment.

Summary of Benefits

Sectors Affected: Present and future general populations; the National Energy Program.

The primary benefit of these standards is the protection of human health. Since the Federal Government has yet to design and demonstrate the disposal system, we are unable to accurately determine the health impact resulting from these standards. We estimate that the number of premature cancer deaths that would be caused by disposal in compliance with our standards would not exceed 1,000 over the first 10,000 years after disposal of the wastes. This is an average of one death every 10 years. Since our estimates are conservative, there is a good chance that actual disposal systems would result in fewer cancer deaths than we estimate. Since the President's program includes the standards, we did not estimate the number of premature deaths that would be avoided if the standards were not established.

Many sectors of society, especially environmental groups, State governments, and Members of Congress, have stated that nuclear power should not continue to be used while the problem of high-level radioactive waste disposal remains unsolved. Nuclear power now provides approximately 13% of the Nation's power supply. While EPA is neither for nor against nuclear power, we believe that these standards are the first step towards solving the problem of disposing of high-level radioactive wastes, so that the nation can decide whether or not nuclear power will continue to be part of our energy system.

Summary of Costs

Sectors Affected: Consumers of electricity, Federal military programs.

The high-level radioactive waste disposal program will be initially financed by the Federal Government. According to the provisions of President Carter's spent fuel policy, utilities will pay a one-time full cash recovery charge to the Federal Government for the transfer of spent fuel. Military produced wastes are to be managed and disposed of by the Federal Government. We calculated the cost impact of these standards by estimating the cost of the additional steps the Federal Government would have to take to be in compliance. Based largely on data and analyses performed by the Department of Energy (DOE), we estimate that in the year 1990 (the year we assume the waste program will be established) these standards will result in an incremental annual cost of commercial wate management of no more than $600 million (1978 dollars). This cost impact amounts to less than a one percent increase in national average electricity rates.

We also estimated that the standards would cause an increase of less than $1.7 billion (1978 dollars) over the total cost of the reference defense waste management program, which is estimated to cost about 3.7 billion (1978 dollars).

Related Regulations and Actions

Internal: The part of these standards that covers normal waste management operations is coordinated with our Environmental Radiation Protection Standards for Nuclear Power Operations (40 CFR Part 190) to provide consistent exposure standards for all uranium fuel cycle operations.

External: The Nuclear Regulatory Commission (NRC) is responsible for implementing these standards. To accomplish this, NRC is currently developing regulations for Disposal of High-Level Radioactive Wastes in Geologic Repositories (10 CFR Part 60); see their entry in this calendar.

Active Government Collaboration

We established an interagency working group to help us develop these standards. The agencies represented are the Nuclear Regulatory Commission, the Department of Energy, and the United States Geological Survey.

Available Documents

ANPRM—41 FR 235, December 6, 1976.

Remedial Action Standards for Inactive Uranium Processing Sites, 40 CFR Part 192* (45 FR 27370, April 22, 1980)

Legal Authority

Uranium Mill Tailings Radiation Control Act of 1978, 206, 42 USC, 2022.

Reasons for Including This Entry

The Environmental Protection Agency (EPA) thinks these standards are important because the Federal and State governments cannot undertake the remedial actions Congress authorized until we have promulgated standards for them. People, primarily of the Rocky Mountain States and Pennsylvania, who live or work near tailings areas are very interested in all aspects of the remedial action program.

Statement of Problem

The soils and rocks which make up the earth's crust contain radioactive uranium and thorium isotopes (radionuclides). Almost all human activities which involve removing and processing materials from the earth's crust can result in the release of some of these radioactive materials into the atmosphere. These releases can become potentially hazardous when:

1. The activity involves handling materials that contain concentrations of these radionuclides significantly above the average concentrations in soil,
2. These radionuclides are concentrated during processing to a level significantly above the average concentrations in soil, or
3. The radioactive material is redistributed from its place in nature into a pathway where humans can be exposed to it.

Uranium mining operations involve removing large quantities of ore containing uranium and its radioactive decay products in concentrations up to 1,000 times greater than are normally found in the natural terrestrial environment. After mining, the ores are shipped to uranium mills for separation of the uranium from the other materials in the ore. After the mill crushes and grinds the ore, the uranium is dissolved, precipitated, dried, and packaged as "yellow cake" ($U3O_8$). The residues of the process, normally in the form of a wet sand, are discharged to a disposal area where the liquids are evaporated or partially recycled.

The tailings disposal area consists of a pond and a dry beach area. The size of each component depends on the amount of water that is recycled, the rate of evaporation, and the amount of raw ore being milled. In areas of high evaporation, large dry beach areas are exposed. Radioactive emissions from these areas result from wind erosion of the tailings and diffusion of radioactive radon gas out of the tailings. In addition, radioisotopes and other toxic substances may seep into ground water. The release of radon gas from piles of uranium mill tailings exposes people in the immediate vicinity of the tailings site to radioactivity and, to a lesser extent, exposes more distant populations. Windblown radioactive particulates from tailings sites and direct gamma radiation constitute secondary sources of radiation exposure. If the tailings are uncontrolled, EPA estimates that approximately 200 premature deaths per century could occur in the national population from radiation-induced lung cancer resulting from emissions from these sources. These effects would be divided approximately equally between people who live within five miles of the inactive tailings piles and those in the rest of the country. Health effects from potential contamination of ground water resources are not included in this estimate. The radioactive components in the tailings will remain hazardous for hundreds of thousands of years.

In addition to the hazards posed by tailings piles are those of tailings which have been removed from the piles. In source areas, tailings have been used in construction, often as fill under buildings. Radioactive gas from the tailings may then enter the buildings and raise indoor radioactivity well above normal levels. Congress recognized that unless it acted, tailings from inactive processing sites might pose a continuing health hazard. Therefore, with the Uranium Mill Tailings Radiation Control Act of 1978 (UMTRCA), Congress authorized a joint Federal and State program to perform remedial actions for inactive uranium processing sites according to standards EPA would set. Under the terms of UMTRCA, the Department of Energy (DOE) has designated 25 eligible inactive processing sites. Tailings piles at these sites contain more than 26 million tons of residual radioactive materials on more than 1030 acres of land. In addition, DOE is working to designate additional lands and buildings which are affected by tailings from these sites. However, UMTRCA also provides that no remedial actions may be undertaken until EPA has promulgated standards.

Alternatives Under Consideration

EPA's standards for uranium mill tailings will be standards of general application. They are standards which define environmental radiation conditions which must not be exceeded, but they do not specify the means of remedying existing excesses. UMTRCA requires DOE to conduct the remedial action program. We are developing the standards based on currently available knowledge of the potential harmful effects of uranium mill tailings and the technology and costs of avoiding them. With regard to the form and content of the standards, we are considering the following alternatives:

1. Disposal Standards

EPA is considering an entire range of options from no control to virtually complete control of releases of radioactivity and of non-radioactive toxic substances from tailings. We find that means of providing long-term control of radon releases are available. We are examining the health benefits and costs of controlling these releases to alternative levels which are (a) significantly above the radon release rates characteristic of undisturbed land areas, (b) within the normal range of release from undisturbed lands, or (c) significantly below average rates from such lands.

We currently favor alternative (b) because it avoids nearly all the harmful effects of radon releases and appears to be technically and economically feasible to achieve. Alternative (c) is neither needed nor is it clear that it is reasonably achievable.

We are also considering whether we should prohibit releases of radioactive and non-radioactive toxic substances from tailings to water or should limit releases to levels which preserve water quality for potential uses, including drinking and agriculture. Although information is very limited, we currently believe that a standard prohibiting any release may be very difficult to implement, and is not clearly needed. We prefer standards for uranium mill tailings disposal which prohibit degrading the existing quality of underground and surface water bodies.

The health protection the disposal system ultimately affords depends on the control levels and the time over which they are maintained. We are examining the technical and economic reasonability of requiring effective control for a) several hundred years, b) hundreds to thousands of years, and c) longer than tens of thousands of years. We currently believe it reasonable to apply the disposal standards for at least 1000 years. Applying them for very much longer periods would be impractical for general application.

2. Cleanup Standards for Contaminated Open Land

We are considering alternative standards for cleanup of contaminated open land as follows:

a. Standards which would reduce residual radiation levels to local natural background levels.

b. Standards which would limit the residual radioactivity to levels which may be above local background, but are still within a common natural range of values.

c. Standards which limit residual radiation to levels significantly above normal background.

Alternative a) would be unreasonable because the measurements required to distinguish small elevations above background radioactivity would be unproductively expensive. We believe alternative b) is technically and economically reasonable, and the residual risk will be very small in

practice. Therefore, we feel alternative c) is not warranted.

3. Cleanup Standards for Buildings

Tailings have sometimes been used as construction materials for buildings. This can cause elevated indoor radioactivity and increased risk of lung cancer for occupants who breathe radioactive particles in the air. In developing remedial action standards for this condition, we are considering earlier recommendations by the U.S. Surgeon General for a similar situation at Grand Junction, Colorado, and guidance provided by EPA to the State of Florida regarding indoor radioactivity. We are also considering alternative standards which take account of this earlier guidance, and which reflect current assessments of the health effects of the indoor radioactivity. The standards will take the form of "action levels," i.e., specifications which, if exceeded, will require remedial action.

We could set action levels in terms of the total indoor radioactivity concentrations, or as an increment above average natural background levels. We prefer to express the indoor radon decay product action level in terms of total radon decay concentration, because background levels cannot be determined separately in practice. Indoor gama radiation levels are much more easily determined, however, so we prefer to express the gamma radiation standard as an increment above background. In all cases, the standards will apply to radiation which may reasonably be attributed to tailings, not to other causes.

Summary of Benefits

Sectors Affected: Inactive uranium mill tailings sites designated by DOE for remedial actions under UMTRCA are located in Arizona, Colorado, Idaho, New Mexico, North Dakota, Oregon, Texas, Pennsylvania, Utah, and Wyoming; people in these States, including members of Indian Tribes, and to a lesser extent the entire national population.

The disposal standards will avoid virtually all detrimental effects of uranium mill tailings for as long as the standards apply. Based on current population distributions, we estimate about 200 lung cancer deaths per century due to radon emissions from tailings piles will be avoided. The number may be larger if populations increase, or if population centers develop near piles which are now remote from people. Furthermore, surface and ground water will be protected from degradation by the tailings. Individuals who live or work in contaminated buildings will benefit from application of the cleanup standards. Finally, applying the cleanup standards for open land will result in conditions which do not require further control. This could make several thousand acres of land available for use, and avoid a potential future administrative burden.

Local economies could benefit from decreased unemployment and increased business activity associated with performing the remedial actions to comply with the standards. The remedial actions would also virtually eliminate the inequitable distribution of risk associated with the tailings, which is now greater for people who live or work near the piles or in contaminated buildings than for the general population. After disposal, the radiation risk for such people will be within the normal range of natural background values.

Summary of Costs

Sectors Affected: Federal Government, affected States.

The Federal Government will bear 90 percent of the costs of the remedial action program and the affected States will bear 10 percent. The Federal Government will bear all the costs of remedial actions on Indian lands.

The costs of meeting the disposal standards of all the tailings piles eligible under UMTRCA are difficult to estimate, primarily because methods should be chosen on a site-specific basis. We estimate the average one-time cost of meeting the standards we currently propose to be about $1–6 million (1978 dollars) per site if the existing site is suitable, and $6–13 million (1978 dollars) per site otherwise. Disposal costs for all sites would therefore be about $21–273 million. More restrictive standards which would limit radon releases from tailings to well below release rates from normal soils could require much costlier methods of disposal.

A DOE contractor (Ford Bacon and Davis, Utah Inc.), using interim cleanup criteria, previously estimated that cleanup costs for open lands and buildings would be about $10 million (1978 dollars). Even allowing for increased costs under the cleanup standards we now prefer, which are very difficult to estimate, tailings disposal is still by far the largest cost component of the remedial action program.

During the performance of the remedial actions, localities will be subjected to increased traffic, dust, and other side-effects of earth-moving and construction operations. Disposal operations may require large quantities of clay and soil for covering the tailings. Contaminated open land will be subjected to scraping and digging by the cleanup operations. The environmental effects of these land disturbances will vary with the site.

Related Regulations and Actions

Internal:

1. Radiation protection guidance for remedial actions on residences on Florida phosphate lands.
2. Draft proposed standard for high-level radioactive waste (in development).
3. Proposed standards for treatment, storage, and disposal of hazardous wastes under the Resource Conservation and Recovery Act.
4. Draft Clean Air Act Standards for radioactive materials (in development).
5. Proposed Environmental Protection Criteria for Radioactive Wastes, and applicable Federal Radiation Protection Guidance.
6. Clean Water Act regulations.
7. National Interim Primary Drinking Water standards.
8. EPA Air Carcinogen Policy.
9. Resource Conservation and Recovery Act.

External: Under UMTRCA, the responsibility for selecting and performing remedial actions which satisfy EPA's standards is given to the Department of Energy. Any States which share the cost must fully participate, and the Nuclear Regulatory Commission must concur. Any affected Indian tribe and the Department of Interior must be consulted when Indian lands are involved. In addition, the Department of Justice has responsibilities related to determining the responsibility, if any, of any private parties for remedial actions.

Active Government Collaboration

The President's Energy Coordinating Committee has formed a subcommittee to oversee Federal implementation of UMTRCA. The subcommittee is chaired by the Administrator of the Environmental Protection Agency. Other participating agencies are the Department of Energy, the Nuclear Regulatory Commission, the Departments of Justice, and Interior. These agencies, which all have responsibilities under UMTRCA, have formed a staff level working group which plans necessary interagency coordination and reviews draft documents as appropriate.

Regulatory Analysis—EPA will not develop an analysis, because we expect the cost of implementing the standard in any calendar year will be less than the $100 million criterion EPA has

established for requiring an economic analysis.

Public Hearing—EPA plans to conduct public hearings on the NPRMs, but has not established a date or location for the hearings at this time. We will announce the dates and locations in the Federal Register.

Public Comment Period—The public will have at least a 60-day comment period before the Agency issues the final rules.

Available Documents

From the Congress—House Document Room, H-226 Capitol, Washington, D.C. 20515. Public Law 95-604 Uranium Mill Tailings Radiation Control Act (UMTRCA); House Report No. 95-2480, Pt. I, Committee on Interior and Insular Affairs; House Report No. 95-1480, Pt. II, Committee on Interstate and Foreign Commerce.

FROM DOE—Technical Library, Bendix Field Engineering Corp., P.O. Box 1569, Grand Junction, Colorado 81502—"Phase II, Title I, Engineering Assessment of Inactive Uranium Mill Tailings Sites" by Ford, Bacon and Davis, Utah Inc., (Micro fiche copy only, nominal charge per report).

From EPA/ORP-OANR-460—401 M Street, S.W., Washington, D.C. 20460; Federal Register notice, 44 FR 33433, June 11, 1979, "EPA Development of Standards for Uranium Mill Tailings and Uranium Report on Mining Wastes—Call for Information and Data."

From EPA/ORP-OANR-460—401 M Street, S.W., Washington, D.C. 20460; Federal Register notice, 44 FR 38664-38670, July 2, 1979, "EPA Indoor Radiation Exposure Due to Radium-226 in Florida Phosphate Lands—Radiation Protection Recommendations and Request for Comment."

From EPA/ORP-OANR-460—401 M Street, S.W., Washington, D.C. 20460; Federal Register notice, 45 FR 2736b-27368, April 22, 1980, "Interim Cleanup Standards for Inactive Uranium Processing Sites."

From EPA/ORP-OANR-460—401 M Street, S.W., Washington, D.C. 20460; Federal Register notice, 45 FR 27370-27375, April 22, 1980, "Proposed Cleanup Standards for Inactive Uranium Processing Sites."

Additional documents, when they become available, will be placed in Docket No. A-79-25 which is located in the EPA, Central Docket Section, Room 2903B, 401 M Street, S.W., Washington, D.C. 20460.

Hazardous Waste Regulations: Core regulations to control hazardous solid waste from generation to final disposal. (40 CFR Parts 260, 261, 262, 264, 265, 266)

Legal Authority

Resource Conservation and Recovery Act of 1976 (RCRA), as amended, § 3001, § 3002 and § 3004, 42 U.S.C. § 6921, § 6922 and § 6924.

Reason for Including This Entry

These regulations are important because they will initiate, for the first time on a national level, management of hazardous solid waste from generation to final disposal.

Statement of Problem

The Environmental Protection Agency estimates that more than 54 million metric tons of hazardous waste is generated annually in the United States. Hazardous waste includes toxic chemicals, pesticides, acids, caustics, flammables and explosives. Of this hazardous waste, EPA estimates that 90 percent is managed by practices that will not meet the proposed new Federal standards. A variety of health and environmental damages result from improper management practices. The most frequent are direct contact with toxic waste, fire and explosions, groundwater contamination by leachate, surface water contamination through runoff or overflow, air pollution by open burning, evaporation and wind erosion, and poisioning through the food chain. The amount of hazardous waste will increase by 30 percent in the next decade, primarily because other environmental laws have curtailed emissions into the air, waterways and oceans.

EPA has information on more than 400 cases of damage to human health or the environment due to improper hazardous waste management. One such case, Love Canal in Niagara Falls, New York, resulted in the evacuation of 239 local families at relocation costs of approximately $10 million, projected clean-up costs of over $30 million, and health problems, including possible increases in birth defects, miscarriages, and hepatic and respiratory disorders. With as many as 30,000 hazardous waste disposal sites posing potential public health and environmental threats, hundreds of millions of dollars in damages and remedial costs could result if the problem is left unattended.

Alternatives Under Consideration

A number of alternatives were studied prior to proposed rulemaking and, as a result of public comment and new information, during development of the final regulations. We are considering a number of significant changes to the regulations that may require reproposal, partial promulgation or promulgation of interim final rules for § 3001 and § 3004. EPA will discuss, in detail, in the preamble to the final rules, the alternatives considered and the reasons for their selection or rejection.

The proposed regulations provide two mechanisms for determining if a waste is hazardous: (1) a set of characteristics and (2) a list of specific wastes. The proposed regulations include four (ignitable, corrosive, reactive, and toxic) of eight characteristics orginally considered. Because test methods are not fully developed or validated for the other four characteristics (radioactive, infectious, phytotoxic, and teratogenic and mutagenic), these characteristics were excluded.

The proposed regulations exclude hazardous waste generated by households, farmers, retail establishments and persons who generate less than 100 kilograms per month. This exclusion is based on the assumption that small amounts of hazardous waste will be disposed of in land disposal facilities approved under Subtitle D of the Resource Conservation and Recovery Act and, therefore, will not pose a hazard to human health or the environment. Increasing or decreasing the size of the small generator exemption is receiving consideration prior to promulgation of the regulations.

In addition to defining more or less waste as hazardous and determining the appropriate level for a small generator exemption from regulation, the overall scope of the regulations is affected by defining more or fewer wastes as special wastes. The special waste category, as proposed, defers most treatment, storage and disposal standards for certain wastes of high volume but low hazard, such as those produced by utilities, mining, oil and gas drilling and cement kiln operations.

Eliminating the special waste category is a regulatory choice. In addition, candidate special wastes may be altered as the result of proposed congressional amendments to the pending RCRA reauthorization bills. These amendments will address special wastes (either by deferral or exemption), such as utility wastes; solid waste from the extraction beneficiation and processing of ores and minerals, including phosphate rock and uranium ore; and cement kiln dust waste.

Time-phasing the implementation of the regulations could help reduce the potential burden on environmentally acceptable disposal sites. Disposal

capacity is currently limited and generators may be unable to find adequate disposal facilities. Public opposition to siting may delay the development of additional landfill capacity. The phasing approach could help assure that the most serious environment problems are addressed first if a degree of hazard approach is used. All alternatives under consideration are designed to make efficient use of limited disposal capacity.

Delineating degrees of hazard is difficult, and was not reflected in the proposed waste classification regulations. A risk-oriented hazard system for regulations affecting treatment, storage and disposal facilities could tailor design and operating standards to correspond to the character and hazard of the wastes. However, the risk of a particular waste in a particular location depends as much on the management situation as on the inherent hazard of the waste. Myriad combinations of wastes, site-specific designs, and operating conditions make regulations based on this approach extremely difficult and presumptive. The regulations, as proposed, reflect the similar management needs of most hazardous wastes. They establish standards for each of the several methods of disposing, treating and storing hazardous waste (landfilling, application to the land, treatment in surface impoundments such as holding or aeration ponds, and incineration), that do not vary according to the waste.

The proposed treatment, storage and disposal standards are applicable to all facilities that handle hazardous wastes. Phased facility permitting and notes and variances included in the proposed regulations offer alternatives for accommodating possible difficulties associated with retrofitting existing facilities.

A House amendment to the RCRA reauthorization bill proposes to exempt existing waste water treatment facilities from regulatory control if certain environmental safeguards are demonstrated. Both bills propose mechanisms for the Administrator to require separate standards for new and existing facilities which would ease the regulations' burden on existing facilities.

Another choice is to design alternative standards for the three categories of facilities, to enhance implementation by those in existence or close to start-up of operations and to ease the technical and economic impact of the regulations on these two categories:

EPA is making potentially significant changes to the RCRA 3004 technical standards. Short of the full set of technical, financial and administrative requirements contained in the proposed regulations for treaters, storers and disposers of hazardous waste, EPA will, at a minimum, finalize the interim status standards under Section 3004. Owners and operators of treatment, storage and disposal facilities will have to begin properly storing wastes and meeting interim status standards, including administrative standards for security, recordkeeping, reporting, visual inspection, training of personnel, contingency plans, closure and financial responsibility.

The proposed technical standards for hazardous waste facilities are based primarily on design and operating standards intended to achieve complete containment or destruction of the waste. These are backed up by ambient air, water and groundwater performance requirements in the event the specified designs do not achieve expected levels of health and environmental protection. The approach being developed for the final regulation is a system based on application of "Best Engineering Judgment" for permitting individual treatment, storage and disposal facilities. With this approach, as an alternative to design and operating standards, judgment factors, a decision model, and/or design and operating guidance will be provided to facilitate application of Best Engineering Judgment to each permit case.

Summary of Benefits

By issuing these regulations, the EPA is creating a framework for the control of hazardous wastes which would otherwise contaminate groundwater, surface waters, and soils, poison humans and animals, and cause air pollution, fires, and explosions. These regulations will require proper hazardous waste management that will reduce the incidence of damage to human health and the environment and save hundreds of millions of dollars in the costs associated with clean-up, emergency response, and health and environmental damages.

Comprehensive regulatory controls over the generation, movement, storage, and treatment of hazardous wastes may also help reduce opposition to the siting of hazardous waste management facilities. Overcoming the barrier of local opposition will allow siting of management facilities at environmentally secure sites and further reduce the possibility of damages to health and the environment.

The three proposed hazardous waste regulations are part of a series of seven required by Subtitle C of the Resource Conservation and Recovery Act of 1976 (RCRA) to initiate a national hazardous waste management program.

RCRA required that EPA promulgate the hazardous waste regulations within 18 months of enactment of the law (by April, 1978). EPA did not meet this deadline because of the enormous complexity of the task. Despite suit against EPA by environmental organizations and the State of Illinois for EPA's failure to promulgate the regulations by the dates specified in RCRA, the number of public comments received, the amount of supporting data and documentation needed, and the complexity of the technical and policy issues delayed EPA's promulgation of the regulations. The U.S. District Court approved EPA's proposed schedule for development of the Subtitle C regulations before the fall of 1980.

Summary of Costs

Although these regulations affect most industries throughout the country, the manufacturing industries most affected by the proposed regulations are textile mill products, inorganic chemicals, plastics, pharmaceuticals, paints, organic chemicals, explosives, pesticides, petroleum refining and rerefining, rubber products, leather tanning and finishing, metal smelting and refinishing, electroplating and metal finishing, special machinery manufacturing, electronic components, and batteries. Eight sectors are likely to experience some plant closures and job losses. These sectors include electroplating, wool fabric dyeing and finishing, mercury cell chlorine, leather finishing, mercury smelting and refining, and secondary copper, secondary lead and secondary aluminum smelting.

The estimated annual costs attributed to the RCRA Section 3001, 3002, and 3004 proposed regulations are $3 million, $16 million, and $570 million, respectively. The costs of these three regulations will comprise the majority of the costs for the set of seven RCRA hazardous waste regulations. The total annual incremental cost of compliance with the proposed hazardous waste regulations is estimated at $630 million (in 1977 dollars). Of the $630 million, $120 million is associated with postclosure liability requirements $260 million is attributable to building and operating waste management facilities, and $14 million is associated with recordkeeping and reporting. Monitoring and testing, administration, training, and contingency planning account for the remaining $236 million. The total cost represents approximately ½ of one percent of the annual value of the affected industries' production.

The regulations will also affect the public and private hazardous waste management industry. In all, some 380,000 generators, transporters, treaters, storers and disposers of hazardous wastes will be brought into the regulatory program. The affected industrial segments will probably pass on the increased costs to the public, resulting in a nominal increase in prices of selected consumer items.

Industries which presently dispose of hazardous waste at their own facilities may begin to ship their waste to off-site facilities rather than incur the costs of upgrading their disposal facilities to comply with the regulations. This is likely to cause a short run shortage of disposal capacity, which will increase demand for new sites. This capacity shortage and rigorous standards for facilities may result in a nominal increase in the cost of disposal.

The governmental costs associated with the implementation and maintenance of the hazardous waste management program are estimated at $20 to $35 million per annum. We currently estimate that 35–41 states and territories will assume the program while EPA operates a Federal program in the remaining 15–19.

Because the states of Texas, Ohio, Pennsylvania, Louisiana, Michigan, Indiana, Illinois, Tennessee, West Virginia, and California generate 65 percent of all hazardous waste produced nationally, these states will probably be affected to a greater degree than others.

Related Regulations and Actions

Internal: Proposed hazardous waste rules linked with the three described in this calendar in creating the RCRA Subtitle C regulatory framework are:

(1) Proposed Consolidated Permit Regulations, 44 Federal Register 34244–34344 and Draft Consolidated Permit Application Form, 44 Federal Register 34346–34392, June 14, 1979 (proposed rule and draft application forms, respectively)

(2) Hazardous Waste Guidelines and Regulations, 44 Federal Register 49402–49404, August 22, 1979 (supplemental proposed rule)

(3) Authorization of State Hazardous Waste Programs; Advance Notice of Final Regulation, 45 Federal Register 6752–6756, January 29, 1980.

(4) Notification of Hazardous Waste Activity; Public Notice, 45 Federal Register 12746–12754, February 26, 1980.

Rules regarding disposal of polychlorinated biphenyls (PCBs) were issued under the Toxic Substances Control Act, § 6(e), (15 U.S.C. § 2605). The Federal Insecticide, Fungicide and Rodenticide Act (7 U.S.C. § 135 et seq.) regulates the disposal of pesticides and pesticide containers. The Marine Protection, Research and Sanctuaries Act (33 U.S.C. 1401 et seq.) controls incineration or dumping of hazardous waste at sea.

External: The Department of Transportation has developed hazardous materials transportation regulations (49 Code of Federal Regulations Parts 171–173, 178–179) controlling containerization and labeling of waste by generators using transporters engaged in interstate or foreign commerce. EPA's final rule, Standards Applicable to Transporters of Hazardous Waste, was published, 45 Federal Register 12737–12744, February 26, 1980.

This incorporated DOT's rules on labeling, marking, packaging, placarding and discharge reporting. DOT, in its final rule, will incorporate EPA's manifest requirements and expand its list of hazardous materials to include hazardous wastes which require a manifest.

Active Government Collaboration

Department of Defense, Occupational Safety and Health Administration, Department of Energy, Food and Drug Administration, Soil Conservation Service, Water Resources Council, the Center for Disease Control of the Department of Health, Education and Welfare, Department of Transportation and Interstate Commerce Commission cooperated with EPA during development of the proposed regulations.

Final rules effective—Regulations affecting hazardous waste generators become effective on August 26, 1980. Regulations for identification and listing of hazardous waste will be effective upon promulgation. Regulations affecting owners or operators of hazardous treatment, storage or disposal facilities will be effective six months after promulgation.

Available Documents

NPRM, 43 Federal Register 58946–59208, December 18, 1978.

Supplemental Proposed Rule, 44 Federal Register 49402–49404, August 22, 1979.

Final Rule, Hazardous Waste Management: Overview and Definitions; Standards Applicable to Generators of Hazardous Waste (RCRA § 3002): 45 Federal Register 12722–12744, February 26, 1980.

The EPA Office of Solid Waste Docket (Room 2711A, EPA, 401 M Street, S.W., Washington, D.C.) maintains the following documents for public review:

Draft background documents
Draft Resource Requirements Summary
Draft Regulatory Analysis
Public comments
Summaries of ex parte contacts
Public hearing transcripts
Studies and reports on hazardous wastes and hazardous waste management

Copies of the following documents are also available from Mr. Edward Cox, Solid Waste Information Office, 26 West St. Clair, Cincinnati, Ohio 45260:

Draft Environmental Impact Analysis
Draft Integrated Impact Assessment of Hazardous Waste Management Regulations
Studies and reports on hazardous wastes and hazardous waste management

Test Rule for Chemical Substances and Mixtures—Chloromethane and Chlorinated Benzenes (40 CFR Part 771)

Legal Authority

Toxic Substances Control Act, §§ 4 and 26 [15 U.S.C. §§ 2603 and 2625].

Reasons for Including This Entry

The Environmental Protection Agency (EPA) thinks this rule is important because we need data to assess the risk of injury to human health caused by exposure to the chemicals chloromethane and chlorinated benzenes. This rule is also significant because it is the first rule the Agency has proposed under § 4 of the Toxic Substances Control Act (TSCA) which will require manufacturers and processors of chemical substances to perform testing to assess the health effects of toxic substances.

Statement of Problem

Section 4 of TSCA gives the Environmental Protection Agency the authority to require that manufacturers and/or processors of chemicals test these chemicals for possible adverse effects on human health or the environment. To implement § 4, we are in the process of developing, proposing, and promulgating test standards and test rules. A test standard is a description of the scientific methodology and analysis to be used in testing for an effect. A test rule is a regulation requiring manufacturers and processors of specific chemicals to test these substances for certain effects according to appropriate test standards. The Agency establishes a reasonable timetable in which industry must complete the development of the test data.

Section 4(e) of TSCA established an Interagency Testing Committee (ITC) to make recommendations to the EPA Administrator, in the form of a list, regarding chemical substances that should receive priority consideration in

the Agency's development of test rules. For the most part, chemicals to be included in test rules come from the semiannual recommendations made by the ITC. The committee's eight members represent the Council on Environmental Quality, the Department of Commerce, the Environmental Protection Agency, the National Science Foundation, the National Institute of Environmental Health Sciences, the National Institute of Occupational Safety and Health, the National Cancer Institute and the Occupational Safety and Health Administration.

The ITC, in its Initial Report (42 FR 55026, Oct. 12, 1977), recommended that chloromethane be tested for carcinogencity, mutagenicity, teratogenicity, and other chronic effects and emphasized its concern about chloromethane's effects on the central nervous system, liver, kidney, bone marrow, and the cardiovalcular system.

We have completed our analysis of data on the health effects of and levels of exposure to chloromethane. Approximately 300 to 500 million pounds of choromethane are manufactured annually in the United States. We believe that the level of human exposure to chloromethane during manufacturing and processing may pose unreasonable risk to human health. Our analysis of studies showing gene mutations in bacteria, chromosomal changes in plant cells, neurotoxicity, birth defects, embryo and fetal toxicity in test animals and other data indicate that exposure to chloromathane may cause cancer and structural birth defects in humans. Because of these findings and the estimated levels of human exposure, we are proposing requirements for industry to test for the health effects of chloromethane in our first test rule.

Monochlorobenzene and dichlorobenzene were also contained in the ITC's initial report. The ITC recommended the development of rules that would require industry to test these chlorinated benezenes for potential to cause cancer, gene mutation and chromosomal aberration, structural birth defects, other chronic environmental effects and also recommended requiring an epidemiological study. The ITC's third report (43 FR 50630, Oct. 30, 1978) added the higher chlorinated benzenes, (tri-, tetra-, and penta-), to the priority list and recommended testing requirements for the same effects.

Our investigation of the chlorinated benzenes indicates that the annual domestic production volume ranged form over one million pounds of pentachlorobenzene to 325 million pounds of monochlorobenzene. Exposure to the liquid chlorobenzenes is due to their use as a functional fluid in transformers, process solvents, solvents in formulated products, and systhetic intermediates, while exposure to the solid forms results from their use as synthetic intermediates and pesticides. Workers are exposed to chlorinated benzenes during manufacture, processing, and use, consumers are exposed to certain chlorobenzenes in their use, and the general population may be exposed from environmental concentrations resulting from manufacture, processing, use and disposal of the substances.

Our analysis shows that exposure to the chlorinated benzenes may present an unreasonable risk of cancer, structural birth defects, and reproductive and subchronic/chronic effects. These conclusions are based on (1) their chemical structural similarity to known carcinogens and teratogens; (2) the tumor promoting activities of chlorinated benzene metabolites; and (3) studies showing, among other things, mutagenic effects, birth defects, embryo- and fetotoxic responses, and reproductive effects in animals; and (4) reports of adverse effects on human livers and blood production. Because of these findings and the potential for human exposure, we are proposing health effects testing requirements for the chlorobenzenes in the first test rule.

Alternatives Under Consideration

The alternatives available to us are quite limited. Under TSCA, if EPA finds that (1) a chemical may present an unreasonable risk of injury to human health or the environment, or a chemical may enter the environment in substantial quantities or result in significant human exposure, and (2) there are insufficient data or experience to characterize its effects on health or the environment, and (3) testing is necessary to develop such data, we must require industry to conduct testing and there is no alternative to issuing a test rule. However, we will encourage industry to begin testing of a chemical before a test rule is proposed. If such testing is satisfactory, it could obviate the need for a test rule.

Another alternative is to conduct testing in governmental facilities or under contract to the government. We will take this approach where it would be inappropriate or infeasible to require testing by the chemical industry, but heavy reliance on this approach would be in direct conflict with TSCA, which states that the development of data on health and environmental effects "should be the responsibility of those who manufacture and those who process chemical substances and mixtures."

Summary of Benefits

Sectors Affected: Factory workers, consumers and the general public.

The data generated from the testing required by this rule would permit EPA to assess the risk to human health of manufacturing, processing, and use of chloromethane and the manufacturing, processing, use and disposal of the chlorinated benzenes. If the Agency finds this risk to be unreasonable, it may take action to reduce human exposure under one of its authorities or recommend regulation by another agency such as OSHA. The testing required by this rule could potentially benefit the workers who manufacture or process these chemicals, the consumers of these chemicals, and the general public.

Summary of Costs

Sectors Affected: Chlorinated Benzenes—Producers and processors of chlorinated benzenes which include some manufacturers and processors of industrial solvents, dyes, organic intermediates, pesticides and solvent-carrying chemicals. Chloromethane—Producers and processors of chloromethane which include manufacturers and processors of some silicone products, chlorinated hydrocarbons, butyl rubber products, herbicides and lubricants.

The costs of complying with these rules is estimated to be $0.8 million for manufacturers and processors of chloromethane and $2.4 million for the manufacturers and processors of the chlorinated benzenes.

Related Regulations and Actions

Internal: We proposed health effects test standards for various effects on May 9, 1979 (44 FR 27334) and July 26, 1979 (44 FR 44054) and standards for Good Laboratory Practices for Health Effects on May 9, 1979 (44 FR 27362).

We also published a proposed rule under TSCA § 8(d) that would require persons to submit all unpublished health and safety studies concerning all chemicals recommended for testing by the Interagency Testing Committee (44 FR 77470, December 31, 1979).

We are planning to publish a Proposed Statement of Exemption Policy and Procedure relating to the granting of exemptions from § 4 testing.

We are also planning to announce our tentative decision not to require health effects testing for acrylamide a compound suspected of entering surface water and ground water through its use as a chemical grout, a waste water

treatment chemical and other industrial applications. This conclusion is based on animal studies that demonstrate the consistent induction of nervous system disorders at very low exposure levels, and we believe that any further information gained through testing would not affect regulatory actions designed to reduce human exposure to acrylamide. Acrylamide was included in the ITC's second list of chemicals (43 FR 16684, April 19, 1978) to be considered by EPA for test rule development.

External: Under the aegis of the Interagency Regulatory Liaison Group, the EPA, the Food and Drug Administration, the Occupational Safety and Health Administration, and the Consumer Product Safety Commission are jointly developing guidelines describing test methods that will meet all four agencies' needs.

Active Government Collaboration

Other Federal agencies that have been or will be consulted include the Food and Drug Administration, Consumer Product Safety Commission, Occupational Safety and Health Administration, National Cancer Institute, and National Institute of Environmental Health Sciences.

Available Documents

Proposed Health Effects Test Standards for Toxic Substances Control Act Test Rules: Proposed Good Laboratory Practice Standards for Health Effects, 44 FR 44054, July 26, 1979.

Proposed Health Effects Test Standards for Toxic Substances Control Act Test Rules, 44 FR 27334, May 9, 1979.

The Interagency Testing Committee established under TSCA has issued four reports making recommendations on chemicals to be covered by TSCA testing rules:

First Report: 42 FR 55026, October 12, 1977.
Second Report: 43 FR 16684, April 19, 1978. OTS Docket 040004
Third Report: 43 FR 50630, October 30, 1978. OTS Docket 040005
Fourth Report: 44 FR 31866, June 1, 1979. OTS Docket 410001
Fifth Report: 44 FR 70664, December 7, 1979. OTS Docket 410001

Premanufacture Notification Requirements and Review Procedures (40 CFR Part 720)

Legal Authority

Toxic Substances Control Act (TSCA), § 5, 15 U.S.C. § 2604

Reasons for Including this Entry

The Environmental Protection Agency thinks that this rule is important because the regulations may have a substantial economic impact on the chemical industry.

Statement of Problem

To prevent public health risks and environmental contamination before potentially toxic substances are widely used and dispersed, Congress included a section on premanufacture notification in the Toxic Substances Control Act (TSCA) of 1976. This section requires a manufacturer to notify the Environmental Protection Agency (EPA) of his intent to manufacture or import a new chemical substance, and to submit information concerning that substance which the Agency can use to assess the risks associated with its manufacture, processing, or distribution in commerce, use, or disposal. On the basis of this assessment and as evaluation of economic considerations and other relevant factors, EPA will make decisions concerning the reasonableness of any risk and will take appropriate action to obtain more information or data, regulate production or use, or require reporting by manufacturers, processors or distributors of chemicals once the substance is in commerce. If EPA does not regulate the substance during the premanufacture notification period, the manufacturer may begin production (subject to regulation under any other laws).

To implement the notification process, EPA proposed a set of premanufacture notification rules and forms for public comment on January 10, 1979. In response to comments received on its initial proposal, EPA revised and reproposed the forms and certain portions of the rules on October 16, 1979. The rules, when final, will clarify the statutory obligations of manufacturers and inporters of new chemical substances to provide information to EPA on the substances, and will also clarify the Agency's procedures for reviewing the information. The forms will provide a detailed specification of the information they must submit and the formats in which they should supply the information. The manufacturers are responsible for assembling the information. EPA must decide, generally within 90 days of receiving the information, whether the substance in question presents an unreasonable risk to human health or the environment, and if so, what action to take.

Alternatives Under Consideration

EPA must resolve several significant issues in this rulemaking. Among them are the scope and level of detail of information to be required; the identification of specific chemical substances for which industry must submit premanufacture notifications to EPA; policies regarding the confidentiality of information submitted; the extent to which the submitter must contact prospective customers to obtain relevant data; supplemental reporting; and whether and how EPA determines that submissions meet its requirements. EPA is considering other approaches to resolving these and related issues based on the comments received from industry and public interest groups which suggested alternatives to the initial proposal. (See "Available Documents." NPRM for Proposed Rules and Other Issues—44 Federal Register 59764, October 16, 1979).

Summary of Benefits

Sectors Affected: General Public and the Environment

The premanufacture review process will benefit public health and the environment by preventing the production, use, or disposal of new chemicals which present unreasonable risks. By preventing potential hazards at an early state, EPA can minimize economic dislocation, especially that which would result if a chemical is in full production and use in withdrawn. Adverse employment effects and the obsolescence of plant equipment will be substantially reduced by early regulation. Preventing toxic chemicals from entering the environment also will decrease lost work days and hospitalization costs that result from worker exposure to toxic chemicals.

Summary of Costs

Sectors Affected: The chemical industry.

EPA is conducting an in-depth study of the premanufacture notification requirements in order to determine with a greater degree of confidence the nature of the costs and economic effects of this rulemaking. These effects will include those on research and development programs; industry sales, growth and profitability; and the structure of the chemical industry. EPA will use the results of this study in making final decisions on how to implement the premanufacture notification program. Preliminary results of this analysis estimated that the notice from proposed in January 10, 1979, would cost between $2,500 and $22,500 to complete for each notice submitted. Estimates for the October 16 reproposed, shortened form indicated that completion of the revised form would cost between $1,155 and $8,925. It has also been estimated that approximately four hundred notices would be submitted per year. Therefore, the total cost of providing the notice forms in a

typical year would be between $462,000 and $3,570,000. October 16 cost estimates also included costs of between 0–$6,400 for asserting and substantiating claims of confidential business information.

Related Regulation and Actions

None.

Active Government Collaboration

Other Federal agencies that have been involved in this rulemaking include the Consumer Product Safety Commission, the Occupational Safety and Health Administration, the Food and Drug Administration, the Department of Transportation, and the Bureau of the Census.

Available Documents

NPRM for Premanufacture Notification Requirements and Review Procedures—44 Federal Register 2242, January 10, 1979.

Discussion of Premanufacture Testing Policy and Technical Issues—44 Federal Register 16240, March 16, 1979.

Interim Policy Statement—44 Federal Register 28558, May 15, 1979. NPRM for Rules and Other Issues—44 Federal Register 59764, October 16, 1979. (Docket number OTS–050002).

These documents are available from the Agency Contact listed below.

Rules Restricting the Commercial and Industrial Use of Asbestos Fibers (40 CFR Part 763)

Legal Authority

Toxic Substances Control Act (TSCA), 15 U.S.C. §§ 2601, 2605

Reasons for Including This Entry

The Environmental Protection Agency (EPA) has included this action because of its potential economic impact on the asbestos industry. The economic cost of the rule will probably exceed $100 million. We may prohibit a large portion of the domestic production and importation into the United States of asbestos-containing products.

Statement of the Problem

Epidemological studies have established that exposure to asbestos fibers greatly increases a person's chance of contracting lung disease, particularly asbestosis and lung cancer. Since the turn of the century tens of thousands of Americans have suffered from asbestos-related diseases.

EPA is concerned that in spite of past governmental regulation of asbestos millions of Americans may be exposed to levels of asbestos which significantly increase the risk of contracting asbestos-related diseases. (Past regulations are cited below under Related Regulations and Actions.) Currently, more than two million workers are exposed to asbestos fibers (at levels higher than background) in their places of employment. In addition, the 159 million Americans who live in urban areas may be exposed to asbestos fiber levels which significantly increase the risk of contracting asbestos-related diseases. EPA is concerned that asbestos fiber emissions from the mining, millings, processing, or distribution of asbestos or from the use, misuse, or disposal of asbestos-containing products might cause significant pollution of urban air.

It is difficult to estimate the number of people who will contract asbestos-related diseases at current exposure levels. Data on mortality rates are available for workers who are exposed to asbestos fiber levels considerably higher than general population exposures. EPA will extrapolate to predict risks for the general population.

EPA is conducting this regulatory program because the agency is not convinced that existing regulations have adequately protected the public. These regulations have focused on limited aspects of the asbestos exposure problem, such as worker exposures and air emissions from manufacturing facilities and a few consumer products. Regulation under the Toxic Substances Control Act (TSCA) would eliminate unreasonable human health risks from all asbestos-related activities.

If EPA does not promulgate a rule in this area, a large number of people might die from asbestos-related diseases each year.

Alternatives Under Consideration

The extent of EPA action will depend on the seriousness of the problem and the extent to which other Federal agencies take additional actions to reduce risks. EPA is considering the following alternative actions: (1) prohibiting the manufacture and processing of asbestos for nonessential uses, (2) prohibiting the manufacture and processing of asbestos for specific uses, (3) restricting the quantity of fibers which may be mined or imported, allocating quotas to businesses, and allowing industry to decide which uses will be restricted, (4) requiring labeling of asbestos-containing products, (5) regulating under laws other than TSCA, and (6) not regulating.

EPA's choice of a regulatory program will depend on the seriousness of the risks and the identification of the major sources of exposure. EPA suspects that much of the asbestos to which the public is exposed comes from emissions caused by mining, milling, and processing asbestos fibers; emissions resulting from the use of asbestos-containing products may not be as significant. In that case, EPA would want to reduce mining, milling, and processing risks as much as is reasonable (option 1).

If mining, milling, and processing present unreasonable risks, it would not be necessary for EPA to investigate emissions from all individual products in order to regulate. Calculating exposures from these products would require a herculean effort and would greatly delay the Agency's ability to reduce risk. Further, regulating only selective uses would provide considerably less public health protection than a more inclusive rule. Therefore, EPA is unlikely to choose option 2. If EPA implements either option 1 or option 2, the Agency will need to grant exemptions for essential uses—those uses which produce major social benefits and for which substitutes do not exist.

Option 3 is a possible substitute for either of the first two options. Allocation of quotas could be a very difficult process and could result in some inequities within industry. Further, at this time it is not clear that the economic impact of such an approach would be any less than option 1. The major advantage of option 3 over option 1 is that the marketplace, rather than EPA, would decide which uses of asbestos should continue.

EPA is considering imposing a labeling requirement (option 4) either in addition to or in lieu of other requirements. A labeling rule would have considerably less economic impact than option 1, 2, or 3, and it would also provide less direct protection to public health.

Finally, EPA is considering either regulating under other Federal laws administered by EPA or not regulating in deference to other Federal agencies. Several comments on the ANPRM (44 FR 60056, October 17, 1979) indicated that industry does not consider TSCA to be an appropriate authority for regulating asbestos and that further Federal regulation, if needed, should be implemented under other laws, particularly the Occupational Safety and Health Act (OSH Act). EPA is not currently convinced that if the Occupational Safety and Health Administration (OSHA) lowers its workplace standard to 0.1 fiber per cubic centimeter; (as it has announced its intention to do), its action will sufficiently protect workers and the general public. EPA will consider the impact of any likely future OSHA action on its evaluation of human health risks

from exposure to asbestos. Nevertheless, in spite of action by OSHA, EPA may find that it is necessary to restrict production and importation of products containing asbestos.

Any action by the Consumer Product Safety Commission (CPSCC) would not affect production of industrial asbestos-containing products, and these production processes may cause significant fiber emissions.

A combination of EPA actions under the Clean Air Act, Clean Water Act, Safe Drinking Water Act, the Resource Conservation and Recovery Act, and other laws might significantly reduce asbestos-related risks. However, the EPA Administrator might find that it is in the public's interest to regulate under one law (TSCA) than several laws, particularly if the risk reduction achievable under one TSCA rule will be the same as or greater than the combined impact of several regulations under other laws.

Summary of Benefits

Sectors Affected: The public, asbestos workers, and industries which manufacture asbestos substitutes.

At this early stage of development of EPA's rule it is impossible to estimate benefits in quantitative terms. Regulation will decrease the incidence of asbestosis and lung cancer in the United States, thus decreasing the number of worker days lost due to worker sickness, increasing space available in hospitals, and decreasing costs due to illness and premature death.

EPA regulation of asbestos should increase demand for substitutes such as fiberglass, ceramic fibers, polyvinylchloride, and ductile iron pipe. Therefore, manufacturers and distributors of substitutes should benefit from regulation.

Summary of Costs

Sectors Affected: The asbestos industry, including asbestos mines, asbestos product producers and their suppliers, importers, and users of asbestos products.

Because EPA has not completed its analysis of economic effects, cost estimates are not available. Asbestos mines and asbestos processors will be forced to reduce production, and many processors will be forced out of the asbestos business. EPA plans to regulate in a manner which will allow asbestos processors time to convert to substitutes. Small businesses may seek aid from the Small Business Administration in order to obtain capital to convert. It is too early to predict the effect of regulation on employment. EPA hopes that jobs lost from the asbestos industry will be offset by job gains in substitutes industries. Substitute products generally cost more than asbestos-containing products, and these costs will be passed on to consumers.

Related Regulations and Actions

External: To maximize the effectiveness of this proposed rule, EPA is coordinating either directly or through the Interagency Regulatory Liaison Group (IRLG) with the Occupational Safety and Health Administration (OSHA), the Consumer Product Safety Commission (CPSC), the Food and Drug Administration (FDA), the Mine Safety and Health Administration (MSHA), and the Department of Transportation (DOT).

EPA and CPSC both published ANPRM's on October 17, 1979 in the Federal Register (44 FR 60053). These ANPRM's were prefaced by a Joint Statement of Cooperation signed by the EPA Administrator and CPSC Chairman. The statement indicated how the two agencies will cooperate and direct their regulatory efforts to minimize reporting requirements and other burdens on industry, and to improve overall public health. EPA is planning to promulgate a rule under § 8(a) of TSCA to require manufacturers and processors of asbestos fibers to submit economic and exposure information. EPA is also planning to promulgate a rule under § 8(d) of TSCA requiring industry to submit unpublished health and safety studies relating to asbestos. CPSC is planning to issue a general order requiring manufacturers and private labellers of some categories of consumer products to submit information on the use of asbestos in those products. CPSC will not require the submission of information already submitted to EPA.

OSHA plans to lower its workplace standard for asbestos exposure (8 hr. time weighted average) from 2f/cc (fibers per cubic centimeter) to 0.1 f/cc. This action is in response to a recommendation in April, 1980 by the joint National Institute for Occupational Safety and Health (NIOSH)—OSHA Asbestos Work Group that "a new occupational standard be promulgated which is designed to eliminate non-essential asbestos exposures, and which requires the substitution of less hazardous and suitable alternatives where they exist."

Past Regulations: CPSC—16 CFR Parts 1145, 1304, and 1305; OSHA—29 CFR Part 1910; FDA—21 CFR Parts 121, 128, 133, and 191; DOT—49 CFR Parts 170–189; MHSA—30 CFR Parts 55, 56, 57, and 71.

Internal: EPA has established National Emission Standards for Hazardous Air Pollutants for several asbestos sources under the Clean Air Act, 42 U.S.C. § 7401 *et. seq.* EPA is developing effluent guidelines regulating wastewater discharges of asbestos under the Federal Water Pollution Control Act, 33 U.S.C. § 1251 *et. seq.*, as amended in 1972 and 1977. It is also considering additional regulation of asbestos in drinking water under the Safe Drinking Water Act, 42 U.S.C. § 3006 *et.seq.*

The Agency is investigating the development of a rule to require surveys to determine whether asbestos hazards are present in public schools because of deteriorating insulation. EPA is also considering requiring appropriate corrective measures where it finds hazards. (See 44 FR 54676, Sept. 20, 1979). Other existing asbestos sources that the Agency may control in the future include public buildings where asbestos was used as an insulation or decorative material and merchant ships, where asbestos is widely used as insulation.

Past Regulations: EPA regulations directed specifically to asbestos are found in 40 CFR Part 61 (air) and Parts 129 and 427 (water).

Regulatory Analysis

EPA will prepare a regulatory analysis in accordance with Executive Order 12044.

Available Documents

ANPRM for Asbestos-Containing Materials in School Buildings, 44 FR 54676, September 20, 1979. ANPRM for Commercial and Industrial Use of Asbestos Fibers, 44 FR 60056, October 17, 1979. (Comment period extended, 44 FR 73127, December 17, 1979.)

(Chemical Hazard Warning Labels (40 CFR Parts 765 and 766)

Legal Authority

Toxic Substances Control Act, 15 U.S.C. §§ 2605(a)(3) and (c)(1); 15 U.S.C. §§ 2607(a)(1)(A) and (B), 15 U.S.C. § 2625(c).

Reason for Including This Entry

These regulations may have a significant impact on at least some segments of the chemical industry and may cause the industry initial costs of $100 million or more.

Statement of Problem

Industrial workers are exposed in their jobs to a large number of chemical substances and mixtures, many of which present health or safety hazards. Approximately 47,000 substances are

produced for commercial purposes. This number only accounts for *substances;* far more of the chemical products manufactured or imported for commercial purposes are *mixtures* composed of combinations of these substances. Existing data indicate that as many as 25 percent of these substances present health and/or safety hazards. Exactly how many of the estimated 300,000 chemical products—counting both substances and mixtures—are hazardous is not known.

Manufacturing industries employ approximately 20.5 million people; the chemical industry alone employs approximately 1.1 million, including professionals (such as chemists and chemical engineers) and a variety of production, maintenance and repair, and janitorial workers.

During production there are many opportunities for workers to be exposed to hazardous chemicals. Exposure may occur as workers maintain and repair industrial systems; as they handle raw materials, intermediates, and finished products; or an a result of breakdowns, lakes, and spills. Workers also may be exposed continuously to airborne concentrations of hazardous chemicals.

In 1977 the National Institute of Occupational Safety and Health published the National Occupational Hazard Survey. The results indicated that approximately 7.5 million workers were exposed to trade-name products, products containing at least one of approximately 400 substances that the Occupational Safety and Health Administration (OSHA) then regulated. Workers who were exposed experienced, on the average, exposures to seven hazards simultaneously (the survey recorded exposures to different substances or exposure to the same substance through different routes (e.g. inhalation and dermal contact) as distinct exposures).

The Bureau of Labor Statistics (BLS) reported approximately 168,000 new cases of occupational illness in 1976 and 162,000 in 1977. But under-reporting of occupational illness is a major problem, in part because the chemical causes of many acute and chronic occupational illnesses remain unrecognized. These BLS data indicate that 91,900, or 54.7 percent, of occupational illnesses in 1976 and 93,800, or 57.9 percent, of occupational illnesses in 1977, other than malignant or benign tumors, were caused directly by exposure to chemicals.

To deal with this problem, EPA is planning to promulgate a rule requiring manufacturers and importers of chemical substances and mixtures presenting acute health or safety hazards to label containers of these chemicals with warning statements and precautions for use. The Agency will simultaneously be promulgating a rule requiring similar labeling for carcinogenic substances and mixtures.

Some chemical manufacturers already place adequate hazard warning labels on containers of their products. EPA has reviewed a sample of labels that industry currently uses voluntarily and has found that many provide clear and comprehensive hazard information. In some cases, indeed, labels provide extensive information. However, many companies use labels that are incomplete, inconsistent, or inaccurate. These rules will make mandatory an activity that is now voluntary, and, in doing so, will ensure that all workers who are exposed to whemical hazards have access to information about these hazards and about the precautions they can take against them.

Alternatives Under Consideration

The principal alternatives to this rule that the Agency is considering are (1) taking no regulatory action, (2) using some method other than labeling to provide hazard warning information, and (3) limiting the scope of the labeling rules in some way.

Alternative 1, taking no regulatory action at this time, would benefit the chemical industry, in that the industry would incur no compliance costs. However, there would be no impetus for current labeling practices to improve, and there would be no corresponding improvement to workers' health and safety. The Agency would incur no cost, but would miss an opportunity to use its resources for a form of regulation that could produce continuing benefits at a relatively low annual cost to industry long after industry and the Agency have made the initial investment.

Alternative 2, requiring some form of hazard warning other than labels, breaks down into three separate alternatives: (a) Require manufacturers and importers to provide workers with material safety data sheets (MSDS) on each hazardous chemical; (b) require manufacturers and importers to provide workers with training about the hazards they may encounter from chemicals in the workplace; and (c) require manufacturers and importers to provide a combined program of worker training, MSDS's, workplace posting, and container labeling.

MSDS's can be very complete and can offer information that will be useful to management, occupational health specialists, and labor organizations, as well as to workers. But they do not offer immediate and easy-to-understand information to the worker at the site of potential exposure to a hazard. Without labeling as a supplement, the worker may not be able to connect a given container of a chemical with the specific MSDA containing the relevant information.

Training programs can be very useful in warning workers of chemical hazards. They can be tailored to a specific company's needs. But costs can be extremely high, especially to small companies, and the costs of a federally mandated program, which would need to require a perhaps undesirable degree of standardization in training programs, would be even higher. An additional disadvantage is that the benefits of a training program would be lost without the kind of written reinforcement that labels and MSDS's would provide.

A combined program of container labels, MSDS's, workplace posting, and worker training programs would provide the most complete hazard warnings by combining the advantages of several information sources while avoiding the disadvantages that would result from using any one of them in isolation. However, the cost of such a comprehensive program, both to industry and the Agency, would be prohibitive.

The Agency has decided to require container labeling, because it provides an immediate source of hazard information at the site of exposure to chemicals in the workplace, at a relatively low cost. This approach as the same focus as current industry practice, and workers are familiar with systems of labeling on which the proposed rules are based.

Alternatives for the rules' scope of applicability are to have them apply to (a) all hazardous chemicals distributed in commerce, (b) chemical substances but not mixtures, (c) large volume chemicals only.

Alternative (a), applying the rules to all hazardous chemicals distributed in commerce, is the Agency's choice.

Alternative (b) has the advantage that it would be easier for industry to comply with the rules. It would eliminate the difficulties of determining the hazards of mixtures, and it would apply to a much smaller set of chemicals. In addition, current voluntary industry standards already cover far more chemical products than would be covered by rules with such a narrowed scope. For these reasons, the Agency believes that to narrow the scope of the rules in this way would result in virtually meaningless rules.

Alternative (c) is to have the rules apply only to large volume chemicals. A relatively small number of chemicals accounts for a large percentage of the

production volume. But because many of these are produced by automated processes which reduce human exposure, these large volume chemicals may not account for most of the worker exposure to chemical hazards. In addition, while each incident of exposure might be small, the number of exposed individuals is still large. To limit the scope of the rules in this way would lower the cost considerably, but would probably not reduce worker exposure enough to justify it.

The proposed rules as they are presently written provide substantial flexibility, so that companies which are essentially in compliance now need not redesign their labels. Compliance will be on a phased schedule, so that the industry may take advantage of information it develops for substances in developing information for mixtures. Since mixtures are composed of combinations of substances, the rules will require manufacturers of substances to comply earlier than manufacturers of mixtures. The rules will require recordkeeping to document industry decisions to label or not to label a given product.

These rules require the disclosure of information, and in this respect employ an innovative regulatory technique. When information about the hazards of chemicals in the workplace is widely available to workers and to occupational health specialists, they may modify their behavior accordingly and thus eliminate the necessity, in some cases, for more restrictive forms of regulatory action.

Summary of Benefits

Sectors Affected: These regulations will benefit workers in most manufacturing industries.

The primary benefit of these labeling regulations will be to provide information to industrial workers,through labels supplied by the manufacturers of hazardous chemicals, about the hazards to which their work exposes them. The Agency expects that workers will use this information to protect themselves from injury and illness that may result from exposure to hazardous chemicals. The knowledge so gained should result in reduced exposure to chemical hazards and reduced occurrences of occupational injury and illness resulting from such exposure. A regulatory analysis is in progress. Even when it is complete, however, the benefits of these rules will not be altogether quantifiable.

The indirect benefits of the labeling regulations may be great. Once workers have adequate hazard information, they can work with management to control or eliminate most hazardous exposures. Companies that use chemicals may stop using the most hazardous of them, thereby creating incentives for the development of safer substitutes and/or better exposure controls for specific uses.

Summary of Costs

Sectors Affected: These regulations will directly affect most segments of the chemical industry.

Chemical companies will incur initial costs for developing information and designing labels. Ongoing costs will include the costs of producing the necessary number of labels for a given year's production and the administrative costs of recordkeeping and periodic updating of labels. The Agency awaits completion of its Regulatory Analysis for quantitative information on these costs.

Related Regulations and Actions

Internal: None.

External: The Occupational Safety and Health Administration (OSHA) of the Department of Labor will be proposing a rule requiring that labels on containers of hazardous chemicals in the workplace disclose the chemical identity of the contents.

Active Government Collaboration

EPA and the Occupational Safety and Health Administration have been coordinating the development of their respective labeling rules and will be proposing them in the Federal Register simultaneously.

Available Documents

None.

Effluent Limitations and Standards Controlling the Discharge of Pollutants From Iron & Steel Manufacturing Plants to Navigable Waterways and the Pretreatment of Wastewaters Introduced into Publicly Owned Treatment Works, 40 CFR Part 420.

Legal Authority

The Clean Water Act as amended, §§ 301, 304, 306, 307, and 501; 33 U.S.C. §§ 1311, 1314, 1316, 1317 and 1351.

Reasons for Including This Entry

The Environmental Protection Agency believes this regulation is important because it will provide control of discharges from the largest metal manufacturing industry in the United States. We expect it will have an annual effect on the economy of more than $100 million.

Statement of Problem

The Clean Water Act requires the Environmental Protection Agency (EPA) to promulgate regulations to control the discharge of pollutants into navigable waters and the introduction of pollutants into publicly owned treatment works (POTWs). These regulations must include effluent limitations representing the "best practicable technology" ("BPT"), the "best conventional technology" ("BCT"), and the "best available technology" ("BAT"), "new source performance standards" ("NSPS"), and pretreatment standards for facilities introducing wastewaters into POTWs.

We initially promulgated regulations for the iron and steel manufacturing industry on June 28, 1974 (Phase I or "steelmaking" operations), and on March 29, 1976 (Phase II or forming, finishing, and specialty steel segments). The U.S. Court of Appeals for the Third Circuit remanded the regulations for several reasons, including the Agency's failure to adequately consider (1) the impact of plant age on the cost or feasibility of retrofitting, (2) site-specific costs, (3) consumptive water use, (4) the economic condition of the industry, and (5) the achievability of certain limitations. (*AISI et al.* v. *EPA*, 526 F.2d 1027 (3d Cir. 1975) and *AISI et al.* v. *EPA*, 568 F.2d 284 (3d Cir. 1977).

We are developing new BPT regulations to replace the regulations remanded by the court. These regulations will reflect new information from industry surveys and sampling and will remedy the deficiencies found by the court. In addition, we are developing BCT and BAT regulations to control toxic pollutants, as required by the 1977 amendments to the Clean Water Act. We expect to publish a notice of proposed rulemaking (NPRM) in the Federal Register in December 1980 which will include effluent limitations and standards for the manufacturing operations covered by the 1974 and 1976 regulations.

The iron and steel manufacturing category (Standard Industrial Classification Codes (SIC) 3312, 3315, 3316, 3317 and parts of 3479) is comprised of approximately 650 manufacturing facilities nationwide. The amount of process water used by these facilities is estimated to be 6,272 million gallons per day. Because of those large flows, the quantity of pollutants discharged is very large, even though the concentration of pollutants in a waste stream sometimes may be relatively small.

During its sampling program, EPA detected in iron and steel manufacturing wastewaters significant levels of copper, chromium, cyanide, iron, nickel, lead, zinc, oil and grease, ammonia, sulfide, fluoride, and suspended solids. Additionally, the Agency found a wide variety of organic materials including benzene, phenols, and aromatic

compounds in wastewaters from coke manufacturing, in blast furnaces which use the coke, and in cold rolling operations. The heavy metals may produce cumulative toxic effects and many of the organic compounds are known or suspected carcinogens.

Alternatives Under Consideration

The Agency is evaluating the capabilities and costs and various wastewater treatment technologies for controlling pollutant discharges from iron and steel manufacturing facilities. A primary focus of this effort is to promulgate regulations to control the discharge of toxic pollutants.

The technologies for the control of wastewater pollutants include both end-of-pipe treatment and methods to reduce water usage. End-of-pipe treatment, best applied after recycle to reduce wastewater volumes, includes, where appropriate, cyanide oxidation, hexavalent chromium reduction, metals precipitation, oil removal, suspended solids (including precipitated metals) removal, and chemical and biological destruction of ammonia and toxic organic materials. While there is some variation in options between the segments of the industry, the options outlined below are generally applicable to all iron and steel-manufacturing facilities.

Option A includes in-process controls to reduce water flows, metals precipitation (if not already required by BPT), and filtration. This option also includes extended biological treatment of coke plant wastes.

Option B includes sulfide precipitation of metals prior to filtration. Coke plants would add powdered activated carbon to the extended biological treatment system.

Option C includes advanced treatment such as evaporation to achieve zero discharge, and chemical oxidation of blast furnace wastewaters to reduce discharges of ammonia and organic pollutants.

In evaluating options for this regulation now under development, we considered all of the important factors including the quantity and type of pollutants generated by each wastewater source; the treatment technologies available for application to that wastewater source; air, solid waste, energy, and other non-water quality environmental aspects of the proposed regulation; and the cost and economic impact of applying each of the several options.

We are still gathering additional information on costs and on the availability and effectiveness of technologies. We have not at this time selected the options we will propose, although we think that options which reduce the discharge of water to the maximum extent are the most environmentally acceptable.

Summary of Benefits

The major benefit of the regulation we will propose will be the reduction of toxic pollutant discharges from iron and steel manufacturing facilities. The quantity of pollutants removed from discharges to the environment under this regulation will vary depending on the various options selected. The Agency estimates that through compliance with the BPT regulation the industry will remove approximately 3.4 million pounds per year of toxic organics, 5.8 million pounds per year of toxic metals, and 176 million pounds per year of suspended solids, oil and grease, ammonia, and other pollutants. Options A, B or C will reduce BPT process wastewater volumes from about 2,600 million gallons per day (mgd) to about 300 mgd. Option A will reduce BPT pollutant discharge loads by about 85 to 90 percent. Options B and C will provide some additional but less dramatic removals of pollutants.

Summary of Costs

Sectors Affected: This regulation would directly affect establishments engaged in the manufacture of iron and steel products. It would indirectly affect consumers of these iron and steel products as the industry passes the resultant small price increases on to them.

We are continung to refine the cost data for the various options. We are also considering the cost effectiveness of requiring different levels of treatment for the various operations. As an approximation of the costs of compliance, the capital investment for the BAT regulatory options range from about $600 million above BPT for Option A to over $1 billion for Option C in 1978 dollars. We do not expect these costs to result in a substantial decrease in steel production or increase in steel costs. However, some shifts in production from marginal plants to more efficient plants will likely continue to occur as the industry strives to become more competitive with foreign producers.

Related Regulations and Actions

Internal: The Agency is reviewing the interaction between this regulation and air pollution and solid waste disposal requirements. As an example, we are evaluating the possible disposal of blowdown from blast furnace wastewater recycle systems by evaporation in slag pits. This is being coordinated with air programs.

In addition, in evaluating wastewater treatment alternatives, the Agency is considering, to the extent possible, the requirements and costs for the management of solid wastes under the Resource Conservation and Recovery Act.

External: This regulation will set minimum requirements on a national level which supersede less stringent state or local regulations. However, all levels of government may require more stringent limitations in specific instances if water quality criteria or other requirements so justify.

Available Documents

The applicable documents currently available are:

(a) EPA-440/1-74-024-a, *Development Document for Effluent Limitations Guidelines and New Source Performance Standards for the Steelmaking Segment of the Iron and Steel Manufacturing Point Source Category* (June 1974); and

(b) EPA 440/1-79/024-a, *Development Document for Proposed Effluent Limitations Guidelines and Standards for the Iron and Steel Manufacturing Point Source Category*, Volumes I through IX, (October 1979).

Copies of the June 1974 report are available from the National Technical Information Service; Springfield, VA. The accession number is PB 238-837 and the cost is $24.80 per copy. The October 1979 report may be obtained through the EPA contact designated below.

Effluent Limitations Guidelines and Standards Controlling the Discharge of Pollutants From Steam Electric Power Plants, 40 CFR Part 423.

Legal Authority

The Clean Water Act, §§ 301, 304, 305, 306, 307, 311, 402, and 504, 33 U.S.C. §§ 1311, 1314, 1316, 1317, 1318, 1321, 1364, 1346. Executive Order 12044 requires a Regulatory Analysis for major and significant regulations involving annualized compliance costs of $100 million, or meeting other specified criteria, 44 FR 30988 (May 29, 1979).

Statement of Problem

The Environmental Protection Agency (EPA), under the statute cited above, is required to develop technology based effluent limitations guidelines and standards to control pollutant discharges from the steam electric power generating industry, and review these regulations once every five years. We initially promulgated effluent limitations guidelines for this industry

on October 8, 1974. The U.S. Court of Appeals for the Fourth Circuit remanded parts of the guidelines (*Appalachian Power* v. *Train*, 545 F. 2d 1351 (4th Cir. 1976)). The court found the record insufficient with respect to various technical aspects and non-water quality considerations (especially cost data and ultimate disposal of wastes).

We are reviewing the 1974 regulations to reflect updated information and remedy the deficiencies pointed out by the Fourth Circuit Court of Appeals. In addition to the pollutants examined in the previous regulations, we are expanding the review to include toxic substances cited in the June 8, 1976 Consent Decree, *Natural Resources Defense Council et al. v. Train*, 8 ERC 2120 (D.D.C. 1976). We expect to publish the NPRM in the Federal Register, July, 1980. We will not include guidelines for thermal discharges in these regulations. The Agency is still considering various thermal options in light of *Appalachian*.

The steam electric generating industry is composed of approximately 1,000 generating plants nationwide. These plants have extremely large discharge flows, therefore the quantity of pollutants they discharge is substantial even though the concentration is relatively low. Pollutants detected in significant quantities in the wastewaters of steam electric plants during an EPA sampling program were total residual chlorine, copper, zinc, nickel, chromium, arsenic and trihalomethanes.

Alternatives Under Consideration

The Agency is considering several wastewater treatment technologies for controlling pollutant discharges from steam electric plants to the Nation's waterways. The primary focus of this effort is to control the discharges of toxic substances. We have determined that cooling water and ash transport water from power plants are the major contributors of toxics. With cooling water, the Agency is concerned about the discharge of pollutants resulting from the use of chlorine and other chemical additives. Technology options for controlling pollutant discharges from this waste stream include end-of-pipe treatment (such as dechlorination) and management practices (such as using alternative chemicals).

For ash transport water (defined below), the Agency is concerned with the discharge of inorganic toxic substances. The control technologies that the Agency has evaluated include: (1) methods of ash transport without the use of water; (2) complete recirculation; (3) partial recirculation; and (4) end-of-pipe treatment.

In evaluating the options for regulation development, we considered several important factors, including the quantity and type of pollutants each wastewater source discharges; treatment technologies that are available for the control of these wastewaters; the air and solid wastes that the wastewater treatment systems may produce; and the cost of these systems.

The various technologies under consideration for waste streams other than ash transport water have minimal economic impact. However, ash transport pollutant control technologies may cause major economic impact for smaller size facilities. These pollutants enter the water because coal or oil that is burned in a steam electric plant's boiler produces varying amounts of ash that require periodic collection and disposal. Some relatively fine and light-weight ash is carried from the boiler with the flue gases and collected with air pollution control equipment. This type of ash is called "fly ash". The relatively bulky and heavy ash that settles at the bottom of the boiler's furnace is called "bottom ash". These two types of ash can be transported wet or dry to their ultimate or temporary disposal sites. Only those plants that transport their ash water using water would be affected by these regulations. The advantages and disadvantages associated with the control options for ash transport water are given below because of their potentially significant economic impact.

Fly Ash

We are considering three technological options for developing effluent guidelines in steam electric plants. The first option requires zero discharge of water used for fly ash transport. The technology for achieving this option is to use transport methods that do not require the use of water (dry transport). The advantages to this option are that the technology is demonstrated and available, and it will eliminate the discharge of toxic metals. The disadvantage is that the cost is high, especially for existing plants.

The second option requires recycling and reuse of the ash transport water. The advantage is that it will reduce toxic pollutants in both their suspended and, to a lesser degree, their dissolved form. However, data are not available yet to determine the degree of recirculation that is possible.

As a third option, the Agency is considering adding a further requirement to the second option that will reduce arsenic from fly ash transport water to 0.05 mg/l, through coagulation and lime precipitation. The advantage of this treatment is that it would be required only of those plants with high levels of arsenic. Since this technology is not used currently in steam electric plants for this wastewater stream, the Agency would be required to use data from other industries to determine the effluent concentration that is achievable.

Bottom Ash

There are two technological options under consideration for bottom ash transport water, including a zero discharge option. The zero discharge option can be achieved through complete reuse/recycling of the ash sluice water or by using transport methods that do not require water. This option will remove competely all toxics in both their dissolved and suspended forms. The other technological option under consideration is partial recirculation of bottom ash transport water. This will remove suspended toxic metals and a limited amount of dissolved metals, although technology for further removal of dissolved metals is available.

We are still gathering additional information on the costs and availability of the technologies. We have not selected the option for proposal, although The Clean Water Act requires regulations "which will result in reasonable further progress toward the national goal of eliminating the discharge of all pollutants", Section 301(b)(2)(A).

Summary of Benefits

The major benefit of the proposed rule will be improvement of the aquatic environment through the reduction and/or elimination of discharges from steam electric generating facilities containing toxic compounds, primarily total residual chlorine and metals. A rough estimate of the quantity of inorganic toxics that the zero discharge option for fly ash would remove is 2,876 lb/day for existing plants and 1,192 lb/day for new plants. The zero discharge option for bottom ash sluice water would remove an estimated 1,131 lb/day of priority pollutants for existing plants and 477 lb/day for new plants.

Sectors Affected: Regulations controlling pollutant discharges would affect manufacturers of anti-pollution equipment.

Summary of Costs

On a national basis, an estimate of the total capital expenditures required to bring existing plants into compliance with the proposed regulations for the period 1980–1985 is approximately $3.31

billion. This represents about 1.5 percent of the total anticipated capital expenditures for the industry during the same period. With the addition of operation and maintenance costs, this means that the average electric bill for consumers would increased by approximately 0.5 percent. None of these requirements is expected to cause plant closings; however, the impact on smaller existing plants can be significant. The Agency is currently updating the cost data and is considering exempting smaller plants from the zero ash water discharge requirement based on economic impacts.

Sectors Affected: These guidelines would directly affect establishments engaged in the generation, transmission, and/or distribution of electric energy for sale. They would also indirectly affect users of electric power through rate increases.

Related Regulations and Actions

Internal: The scrubber systems used to comply with air pollution regulations may discharge contaminated water. The proposed requirements of the New Source Performance Standards under § 111 of the Clean Air Act will increase the number of facilities with scrubber systems in the future.

Section 316(b) of the Clean Water Act authorizes the Agency to require the best technology available in the location, design, construction, and capacity of intake structures for cooling water, to minimize adverse environmental impact.

Requirements for the management of solid wastes under the Resource Conservation and Recovery Act may affect the economic and environmental factors associated with various wastewater treatment technologies.

External: The recent emphasis on converting oil-fired power plants to other fuel types and the problems associated with nuclear waste disposal will affect the distribution of generating capacity by fuel types in the industry and, therefore, the amount of pollutants that would be discharged and controlled.

Active Government Collaboration

The Nuclear Regulatory Commission, the Department of Interior, and the Department of Energy have provided assistance by supplying the Agency with informaton and/or reviewing materials.

Available Documents

The Final Development Document for Effluent Limitations Guidelines and New Source Performance Standards for the Steam Electric Power Generating Point Source Category, EPA (October, 1974) [National Technical Information Service (NTIS) Number PB-240853/P5];

Supplement for Pretreatment to the Development Document for the Steam Electric Power Generating Point source Category, EPA (April 1977) [EPA 440/1-77/084]; and

Technical Report for the Revised Effluent Limitations Guidelines for the Steam Electric Power Generating Point Source Category, EPA (Sepember 1978).

Copies of the above reports can be obtained from NTIS or the EPA contact designated below.

Effluent Limitations Guidelines and Standards Controlling the Discharge of Pollutants From Pulp, Paper, and Paperboard Mills Into Navigable Waterways (40 CFR Parts 430* and 431*)

Legal Authority

The Clean Water Act, §§ 301, 304, 306, 307, 308, and 501; 33 U.S.C. §§ 1311, 1314, 1316, 1317, 1318, and 1361.

Reasons for Including This Entry

The Environmental Protection Agency thinks that this rule is important because it will have an annual effect of $100 million or more on the economy.

Statement of Problem

The Environmental Protection Agency (EPA) is required under the statue cited above to develop technology-based effluent limitations guidelines and standards for discharges into navigable waterways and review such guidelines and standards at least every five years. EPA promulgated effluent limitations guidelines reflecting the best practicable control technology currently available (BPT) and the best available technology economically achievable (BAT) and new source performance standards (NSPS) for six subcategories of the industry on May 9 and 29, 1974 (39 FR 16578, 40 CFR Part 431; and 39 FR 1872, 40 CFR Part 430). EPA promulgated BPT guidelines for the sixteen remaining subcategories of the industry on January 6, 1977 (42 FR 1398, 40 CFR Part 430).

The Clean Water Act of 1977 requires industry to achieve by July 1, 1984, effluent limitations requiring application of BAT for those pollutants which Congress declared "toxic" under § 307(a) of the Act. In addition to the emphasis on toxic pollutants reflected by BAT, the Act requires industry to achieve by July 1, 1984, "effluent limitations requiring the application of the best conventional pollutant control technology" (BCT) for the regulation of conventional water pollutants (biochemical oxygen demand, suspended solids, fecal coliform, oil and grease, and pH). All pollutants that are not either toxic or conventional have been termed "non-conventional" and are subject to regulation under the best available technology economically achievable (BAT).

EPA expects to publish proposed effluent limitations guidelines for BAT, BCT, new source performance standards (NSPS) and pretreatment standards for existing and for new sources (PSES, PSNS) in the Federal Register, September 1980.

EPA estimates that there are 700 operating pulp, paper, and paperboard mills in the United States which discharge about 4.2 billion gallons per day of wastewater. Toxic and non-conventional pollutants of concern detected in the industry's wastewaters during an EPA sampling program were 2,4,5,-trichlorophenol, 2,4,6-trichlorophenol, pentachlorophenol, chloroform, ammonia, and zinc. Conventional pollutants routinely monitored in discharges from pulp, paper, and paperboard mills include biochemical oxygen demand, suspended solids, and pH.

Alternatives Under Consideration

The Agency is considering various wastewater treatment technologies for controlling toxic, non-conventional, and conventional pollutant discharges from the pulp, paper and paperboard industry to the Nation's waterways. Toxic and non-conventional pollutants will be regulated under the best available technology economically achievable (BAT), new source performance standards (PSNS), pretreatment standards for existing sources (PSES), and pretreatment standards for new sources (PSNS). Conventional pollutants will be regulated under the best conventional pollutant control technology (BCT) and "new source performance standards" (NSPS).

In evaluating the options for development of regulations, the Agency considers several important factors, including the quantity and type of pollutants each wastewater source discharges, treatment technologies that are available for the control of these wastewaters, the air pollution and solid wastes that the wastewater treatment systems may produce, and the cost of these systems.

The Agency, through its sampling and data gathering efforts, has determined that existing biological treatment systems are very effective in removing most priority pollutants found in pulp, paper, and paperboard industry wastewaters. Several toxic pollutants were detected with sufficient frequency and/or at sufficient levels to concern us

and we are considering them as candidates for control under BAT and pretreatment regulations. The pollutants of concern and the options being considered to ensure their control under BAT are described below.

Pentachlorophenol, 2,4,5,-trichlorophenol, and 2,4,6-trichlorophenol (toxic pollutants) were found in treated effluents in many subcategories of the industry. These compounds are present in certain of the slimicide and fungicide formulations used in the pulp, paper, and paperboard industry. The best and least expensive method for control of these pollutants is the substitution of these slimicides and fungicides with formulations that do not contain pentachlorophenol, 2,4,5-trichlorophenol, or 2,4,6-trichlorophenol.

Chloroform (a toxic pollutant) was found in very high concentrations (up to 10 milligrams per liter) in raw wastewaters from mills producing bleached pulps. Biological treatment systems are capable of removal of chloroform to low levels (less than 0.1 milligrams per liter). The Agency is considering establishing BAT effluent limitations guidelines and NSPS based on those levels of chloroform attained through the application of biological treatment.

Zinc (a toxic pollutant) was found in wastewaters from facilities using zinc hydrosulfite as a bleaching chemical. The Agency is considering establishing BAT effluent limitations guidelines, NSPS, and pretreatment standards based on the substitition of zinc hydrosulfite with sodium hydrosulfite.

Ammonia (a non-conventional pollutant) is discharged from facilities using ammonia-based pulping processes. The Agency is considering establishing BAT effluent limitations and NSPS based on either a substitution to a different chemical base or on the application of additional end-of-pipe treatment.

Conventional pollutants currently regulated include: biochemical oxygen demand (BOD), total suspended solids (TSS) and pH. The Agency is considering three options under BCT to reduce the discharge of BOD and TSS from pulp, paper, and paperboard mills:

Option 1 includes the addition of in-plant production process controls to reduce raw wastewater flow and BOD to the existing BPT treatment system.

Option 2 includes the reduction of BOD and TSS to levels typical of best performing mills. This option may require expansion or upgrading of existing end-of-pipe treatment systems at many mills in the pulp, paper, and paperboard industry.

Option 3 includes the application of chemically assisted clarification in addition to the technology considered as the basis of Option 1.

The Agency is still developing information on the costs and capabilities of the three technology options.

Summary of Benefits

Sectors Affected: Establishments engaged in the production of pulp, paper, and paperboard; consumers of pulp, paper, and paperboard products.

The major benefit of the proposed rule will be the reduction or elimination of toxic, non-conventional, and conventional pollutant discharges from pulp, paper, and paperboard mills. The discharge of 2,4,5-trichlorophenol, 2,4,6-trichlorophenol, pentachlorophenol, and zinc would be virtually eliminated and the discharge of chloroform and ammonia would be greatly reduced.

The discharges of BOD and TSS from pulp, paper, and paperboard mills will be substantially reduced by the following amounts dependent upon the option selected as the basis of BCT regulations:

BOD: Option 1—18 percent, Option 2—40 percent, Option 3—50 percent

TSS: Option 1—18 percent, Option 2—45 percent, Option 30—80 percent

The current discharge of one million pounds per day of BOD from pulp, paper, and paperboard mills accounts for about 45 percent of the total industrial contribution of BOD. Therefore, these additional reductions represent a significant portion of current conventional pollutant discharge to the Nation's waterways.

Summary of Costs

Sectors Affected: Establishments engaged in the production of pulp, paper, and paperboard; consumers of pulp, paper, and paperboard products.

The Agency is currently refining cost data for the various technology options. It is expected that, with the exception of ammonia removal options, the BAT, PSES, and PSNS technology options will have an insignificant impact on the pulp, paper, and paperboard industry. It is likely that large capital expenditures will be necessary at the nine pulp mills using ammonia-based cooking liquors should we establish limitations for the control of ammonia.

The Agency has made preliminary estimates of the capital costs (1978 dollars) for all U.S. pulp, paper, and paperboard mills to attain levels of BOD and TSS associated with the BCT technology options. They are: Option 1—$.83 billion, Option 2—$1.2 to 1.9 billion, and Option 3—$2.2 billion.

Related Regulations and Actions

Internal: Requirements for the management of solid wastes under the Resource Conservation and Recovery Act may affect the cost of installation and operation of various wastewater treatment technologies.

Active Government Collaboration

The Department of Commerce has provided assistance by reviewing materials.

Available Documents

Development Document for Effluent Limitations Guidelines and New Source Performance Standards for the Unbleached Kraft and Semichemical Pulp Segment of the Pulp, Paper, and Paperboard Mills Point Source Category, EPA (May 1974) [National Technical Information Service (NTIS) Number PB-238 833].

Development Document for Effluent Limitations Guidelines (BPCTCA) for the Bleached Kraft, Groundwood, Sulfite, Soda, Deink and Non-Integrated Paper Mills Segment of the Pulp, Paper, and Paperboard Point Source Category, EPA (December 1976) [Available for review at EPA Headquarters Library].

Preliminary Data Base for Review of BATEA Effluent Limitations Guidelines, NSPS, and Pretreatment Standards for the Pulp, Paper, and Paperboard Point Source Category, prepared for the U.S. Environmental Protection Agency by the Edward C. Jordan Co., Inc., Portland, Maine (June 1979) [Available for review at EPA Headquarters and Regional Libraries only].

Appendix II—Regulations Screened for Review

Executive Order 12044 requires agencies to establish procedures to review existing regulations. EPA responded by creating a screening process in which work group members assessed regulations under eight criteria, including estimated costs, benefits, reporting burdens, and clarity of language. Each work group then made one of four recommendations:

- No further review
- Short-term revision
- Long-term review
- Eliminating the regulation

Recommendations for long-term review usually followed a finding that there was a lack of sufficient data to evaluate the regulation. Work groups usually recommended short-term revision when there was a need to clarify the meaning of the regulation either by a rewrite, reorganization, or an updating of definitions. Work groups recommended eliminating a regulation

when it was obsolete technically or was replaced by a new program.

The Agency has begun to implement several of these recommendations. Program offices are preparing schedules for revising the remaining regulations. EPA will publish later this summer a schedule for implementing these revisions.

The following table lists the recommendations for each of the regulations screened. The first column lists, the title and *Code of Federal Regulations* (CFR) citation of the regulation. The second column contains the recommended action.

Regulation/CFR Citation	Recommendation
Air	
Air Quality Control Regions, Criteria, and Control Techniques, 40 CFR 81, A-D.	No further review.
NESHAPS General Provisions, 40 CFR 61, A.	Short-term revision.
Requirements for Preparation, Adoption, and Submittal of Implementation Plans, 40 CFR 51.	Short-term revision.
Approval & Promulgation of Implementation Plans, 40 CFR 52.	Short-term revision.
NESHAPS 40 CFR 61:	
—Asbestos (Subpart B)	Long-term review.
—Beryllium (Subpart C)	Long-term review.
—Beryllium Rocket Motor Firing (Subpart D).	Long-term review.
—Mercury (Subpart E)	Long-term review.
Fuel Economy of Motor Vehicles, 40 CFR 600.	Eliminate.
Noise	
Interstate Rail Carrier Noise Control, 40 CFR 201.	Revised under court order.
Noise Emission Standard-Portable Air Compressors, 40 CFR 204.1.	No further review.
Interstate Motor Carrier Noise Control, 40 CFR 202.	Short-term revision.
Medium & Heavy Truck Noise Control, 40 CFR 205.	Short-term revision.
Pesticides	
Emergency Exemptions, 40 CFR 166.	No further review.
Disposal and Storage of Pesticides, 40 CFR 165.	No further review.
Establishment Registration, 40 CFR 167.	Short-term revision.
Books and Records, 40 CFR 169.	Short-term revision.
Registration, Registration CFR 162.	Short-term revision.
Rules of Practice, 40 CFR 164.	Short-term revision.
Assessment of Civil Penalties, 40 CFR 168.	Short-term revision.
Worker Protection Standards, 40 CFR 170.	Short-term revision.
Certification of Pesticide Applicators, 40 CFR 171.	Long-term review.
Tolerances, 40 CFR 180	Long-term review.
Experimental Use Permits, 40 CFR 172.	Eliminate.
Radiation	
Environmental Protection Standards for Nuclear Power Operations, 40 CFR 190.	No further review.
Radiation	
Federal Regulation Guides for Underground Uranium Miners, EO 10831; PL-86-373.	Long-term review.
Solid Waste	
Guidelines for Land Disposal Solid Wastes, 40 CFR 241.	No further review.
Prior Notice of Citizen Suits, 40 CFR 254.	No further review.
Materials Recovery, Solid Waste Management Guidelines for Source Separation, 40 CFR 246.	Short-term revision.
Guidelines for Beverage Containers, 40 CFR 244.	Short-term revision.
Amendments to Interim Grant Regulation To Implement RCRA, 40 CFR 30, 35, 40, 45.	Short-term revision.
Guidelines on Solid Waste Collection and Storage, 40 CFR 243.	Eliminate.
Resource Recovery Facilities, 40 CFR 245.	Eliminate.
Identification of Regions and Agencies for Solid Waste Management, 40 CFR 255.	Eliminate.
Water Quality	
Toxic Pollutant Effluent Standard, 40 CFR 129.	No further review.
Marine Sanitation Device Standard, 40 CFR 140.	No further review.
Effluent Guidelines General Provisions, 40 CFR 401.	Short-term revision.
Hospital Effluent Guidelines Provisions, 40 CFR 460.	Short-term revision.
Discharge to Aquaculture Projects, 40 CFR 115.	Long-term review.

[FR Doc. 80-19469 Filed 6-27-80; 8:45 am]

BILLING CODE 6560-01-M

federal register

Monday
June 30, 1980

Part V

Department of Transportation

Federal Aviation Administration

Advanced Simulation

DEPARTMENT OF TRANSPORTATION

Federal Aviation Administration

14 CFR Parts 61 and 121

[Docket No. 19758; Amdts. Nos. 61-69 and 121-161]

Advanced Simulation

AGENCY: Federal Aviation Administration (FAA), DOT.

ACTION: Final rule.

SUMMARY: This rule: (1) Allows expanded training, checking, and certification of flight crewmembers in advanced flight training simulators; and (2) Encourages operators to upgrade their simulators and to perform a higher percentage of training in simulators so that the total scope of flightcrew training is enhanced. The benefits of this rule include substantially improved safety, fuel conservation, and a reduction of airport congestion. In addition, this rule offers a regulatory alternative which could result in significant cost savings for air carriers and represents a significant step in President Carter's program to reduce regulatory burdens through development of alternatives.

EFFECTIVE DATE: July 30, 1980.

FOR FURTHER INFORMATION CONTACT: H. E. Smith, Regulatory Projects Branch (AVS-24), Safety Regulations Staff, Associate Administrator for Aviation Standards, Federal Aviation Administration, 800 Independence Avenue, S.W., Washington, D.C. 20591; telephone (202) 755-8716.

SUPPLEMENTARY INFORMATION:

History

This final rule is based on Notice of Proposed Rule Making (NPRM) No. 79-18, published in the Federal Register on November 13, 1979 (44 FR 65550). All interested persons have been given an opportunity to participate in the making of the rule, and due consideration has been given to all matter presented.

Background

As the state-of-the-art in simulator technology has advanced, more effective use has been made of the airplane simulator in training, checking and certification of flight crewmembers. Simulators can provide more indepth training than can be accomplished in the airplane with a very high percentage of transfer of learning from the simulator to the airplane. There are many advantages in the use of *good* simulators for training.

1. Who can be trained?
   a. Entire flightcrew.
   b. Individual flight crewmembers.
2. What training can be accomplished?
   a. Normal operations procedures.
   b. Abnormal operations procedures.
   c. Emergency procedures.
   d. Any weather condition.
   e. Any lighting condition.
   f. Any airport location.
   g. Training situations which would be impossible or unsafe to conduct in the aircraft, such as wind shear or blown tire on landing.
3. When can training occur?
   a. 24 hours a day.
   b. Any day of the year.
4. Where can the training take place?
   a. Any building that can house the simulator.
   b. Any place in the world.

All of this adds up to training flexibility with maximum safety. In addition, the use of simulators instead of the airplane results in great cost reductions for the operator and achieves the benefit of fuel conservation and a decrease in airport noise.

During the last 25 years, as simulator technology has improved, changes to the Federal Aviation Regulations (FAR) were made to allow the increased use of simulators in air carrier training programs. FAA acknowledgment of the value of simulator training began in 1954 when air carriers were allowed to perform all but four proficiency check maneuvers in a simulator. From this beginning, the FAA has continued to promote, evaluate, and regulate the use of simulation in aviation. In the late 1960's visual attachments appeared on the market. Since that time, a breakthrough in computer technology has permitted the development of computer-generated image (CGI) visual systems. In December 1973, FAR Amendments 61-62 and 121-108 were issued which allowed additional training in visual simulators. Because many training maneuvers, such as engine failure on takeoff and visual approaches, require visual cues to provide the necessary training, these amendments resulted in reducing airplane flight training to approximately 1½ hours for an airline transport pilot certificate. Because of the limitations of simulators at that time, the 1½ hours of actual flight time was necessary to train the pilot to land the airplane, fly other maneuvers, and to become familiar with the feel of the airplane before the FAA certification check. A 1978 amendment to § 121.439 (Amendment 121-148) allowed a simulator approved for the landing maneuver to be substituted for the airplane in a pilot recency of experience qualification. The landing maneuver approval program associated with that rule change and its simulator approval criteria constituted a significant step toward the optimum utilization of airplane simulators in flight training and checking.

Based on the success of the landing maneuver approval program, FAA-industry operational studies, and a review of the latest simulator technology, the FAA proposed its advanced simulation plan in Notice 79-18 to outline the steps for optimum utilization of airplane simulators.

Notice 78-18 proposed to amend §§ 61.157 and 121.407 to allow expanded training, checking, and certification of flight crewmembers in an advanced flight training simulator if that simulator—

(1) Is approved under § 121.407 of Part 121 and meets the appropriate simulator requirements of Appendix H to Part 121; and

(2) Is used as part of an approved program that meets the training requirements of § 121.424(a) and (c) and Appendix H to Part 121.

The notice further proposed a new Appendix H to Part 121. This Appendix provides criteria and a means for achieving approval of advanced airplane simulators for flightcrew training and checking. This plan for achieving the goal of advanced simulation consists of three major phases and an interim phase to facilitate the plan's implementation. The three-phase plan provides guidance through a progressive upgrade of flightcrew training simulators so that the total scope of flightcrew training can be enhanced. Each phase encompasses the preceding phase so that the final advanced simulation phase includes all the requirements of preceding phases. Appendix H describes the simulator and visual system requirements which must be achieved to obtain approval of certain types of training in the simulator. The requirements in the Appendix are in addition to the simulator approval requirements in § 121.407.

Phase I

Phase I is the current landing approval program. The training permitted under this phase is currently authorized for fully qualified air carrier pilots by § 121.439 and through FAA exemptions. Phase I is designed to encourage operators to upgrade their older simulators to the greatest extent possible.

Phase II

Phase II is designed to provide new simulator training capabilities by expanding the ability of the simulator to portray the ground and flight

environment and increasing the simulator's responsiveness. In addition to upgrading the simulator, a special 4-hour Line Oriented Flight Training (LOFT) course is required after the appropriate Part 61 or 121 simulator check. This course must be approved by the Administrator and be designed to prepare the flight crewmember for line operations. Under Phase II, transition and upgrade training and checking are accomplished in a simulator. Transition training is the training required for a pilot to move from one airplane to another in the same airplane group, for example, copilot B-727 to copilot B-707. Upgrade training, as it is applied in this rule, is upgrading from copilot to captain. At the completion of a Part 61, Appendix A, check in the simulator, an appropriate airman certificate or an airplane rating, or both, will be issued. Instructors used in these Phase II training programs, as well as pilots who participate, must be highly experienced. The pilots must be qualified at least as second in command in an airplane in the same group and must meet the requirements of Appendix H before being eligible for Phase II certification.

Phase IIA

Under Phase IIA, any Part 121 operator may conduct Phase II training for 3½ years in a simulator approved for the landing maneuver under Phase I, if the operator meets the additional requirements in Appendix H and submits a plan for approval by the Administrator to upgrade its simulator(s) to meet the Phase II standards. This interim program is designed to provide time and economic benefit to an operator to upgrade its simulators while ensuring safety through additional training requirements. Through the upgrading of industry simulators, further training in adverse conditions experienced in the operations will be possible.

Each Part 121 operator who submits an acceptable simulator upgrade plan to the Administrator before July 30, 1981 may apply for approval to use a Phase I simulator for transition and upgrade training as described in Phase II of the plan. When Phase II simulator requirements are met, the additional training requirements specified in Phase IIA, except the 4 hours of LOFT training discussed above, are removed. Other Part 121 training and operating experience requirements still apply.

Phase IIA interim approval ends for each Phase I simulator listed in the operator's approved plan 3½ years after it is approved for Phase IIA training. Approval of the plan will be withdrawn if any simulator is not upgraded according to the operator's approved simulator upgrade plan. This would result in loss of all Phase IIA training. Extension of Phase IIA training will not be considered because the comprehensive goal of the plan for simulator upgrade would be moribund if the plan were not implemented as developed and approved.

Phase III

Phase III is designed to allow all but static airplane training, the line check, and operational line experience to be conducted in an advanced airplane simulator. At the completion of the final simulator check, the applicant will receive the appropriate certificate or rating. Due to the scope of the training and the possible low experience level of the training candidates, a high degree of simulator fidelity and realism is mandatory. (Applicants must still meet the requirements for an airline transport pilot certificate, including 1500 hours of pilot flight time, to be eligible for that certificate under this plan.) This phase is also designed to guide research in simulator technology to meet training needs determined from airplane accident investigations. The visual requirements of Phase II must also be represented in daylight, dusk, and night scenes under Phase III. Therefore, night and dusk scenes may not be degraded under Phase III.

The advanced simulation plan outlined in Appendix H applies only to an operator who uses the simulator under an approved Part 121 training program. To conduct total initial, transition, upgrade, or recurrent training in a simulator under the plan, all required simulator instruction and checks must be conducted in a simulator as part of an approved advanced simulation training program. The training program would integrate Phase II and III simulators with other simulators and training devices to maximize the total training, checking, and certification functions. Certificates issued during Phase IIA will contain a limitation which requires the pilots to operate under Part 121 until they have met the line operating experience requirements of Appendix H.

Discussion of Benefits

Safety. In the past few years significant developments in simulator technology have made it possible to realistically simulate a specific airplane and its ground and flight environment. By taking advantage of the developments in the state-of-the-art of airplane simulators, flightcrew training could be upgraded from a strictly maneuver and procedures-oriented program to a program where crewmembers can also gain experience in dealing with abnormal flight, system, and environmental situations. This can be illustrated by comparing current flightcrew simulator training with improved training now possible in advanced simulators. Current flightcrew training is based on the maneuvers which have been historically conducted in the airplane. These maneuvers include stalls, steep turns, instrument approaches and airplane engine and system failures. Since current training is based on that which can be accomplished in an airplane, the training is procedurally oriented and designed to avoid placing the airplane in an unafe condition. Simulators have been able to provide maneuvers training including airplane engine and system failures training so that, for example, training in a critical-field-length engine failure on takeoff maneuver can be conducted safely and realistically. However, because simulators have been designed to provide only the types of maneuver training that have been historically conducted in the airplane, they have not been capable of providing training in different flight environments, such as near thunderstorms or on icy runways which might be encountered on line flights. This type of training can be conducted in advanced simulators.

A review of NTSB accident statistics shows that pilot error and adverse weather conditions are the primary causes of most air carrier accidents. This review indicates that it is not the pilot's inability to control the airplane or to fly a specific maneuver but rather the failure of the crew to deal with the abnormal flight situation which causes the accidents. Improved training including line oriented flight training in advanced simulators could be the most significant means for reducing these types of accidents.

Under the FAA's advanced simulation plan, which is implemented in this rule, simulators will have the capability to be programed to represent a full range of airplane flight conditions as well as specific airplane accidents in abnormal environmental conditions. In this way flightcrews could experience a far-ranging set of flight environments and malfunctions. This could assist the crew in making proper judgments when abnormal situations occur in flight. Safety would, therefore, be enhanced dramatically by producing better trained pilots. Without upgrading simulators, upgrading training to this extent will be impossible. Safety would also be greatly increased because advanced training simulators can provide training without

the risk of airplane training accidents. Since 1962 U.S. air carriers have experienced 67 training accidents of which 6 were fatal accidents. In the future, training accidents could be avoided through use of advanced simulation.

Energy Savings. According to information available to the FAA, an estimated 32,000,000 gallons of fuel could be saved each year if Part 121 air carriers use advanced flight training simulators instead of airplanes for transition and upgrade training under Phase II. Over 73,000,000 gallons could be saved each year if the advanced simulation plan were fully implemented (Phase III). These figures are based on 1979 training flight hours utilized by air carriers. Actual fuel savings will depend on the number of Part 121 operators who elect to upgrade their simulators.

Economic Impacts. As a result of the economic and energy benefits which will result from this rule, there is no economic burden imposed on the industry, the government, or the private sector by this action. This rule offers a regulatory alternative which will result in cost savings for any operator who elects to take advantage of it. Under the plan the operator can realize more savings for each Phase of the plan it implements. Economics do, however, play an important role in an operator's decision to upgrade its simulators according to the advanced simulation plan. Basically, the operator has an opportunity to balance the cost of upgrading its simulators, including the value of the safety and training benefits of using advanced simulators, against factors such as airplane operating costs, time out of revenue service, scheduling, and maintenance problems.

Costs involved in flying the airplane vary from operator to operator depending, for example, on the type of airplane involved, the number of crewmembers who require certain types of training, revenue lost, union contracts, and training base location. Costs for upgrading a simulator also vary depending on the airplane type and the condition of the simulator before upgrade. As can be seen in the following chart, the FAA estimates that over $67 million per year could be saved by the U.S. air carriers in fuel costs and $25 million in operating costs if the industry fully implements the advanced simulation plan. In addition, economic benefits will result to the public and the operator by having additional airplanes available that would otherwise be committed to training.

Savings Per Year

Trunks, airplane type	Volume of fuel/block hours (average)	Operating cost/block hours [1] (average)	Estimated crew training hours/year	Fuel in gallons	Fuel cost (x$.915/gal) [2]	Operating cost
B-727(3)	1,263	336.28	15,400	19,450,200	$17,796,933	$5,178,172
DC-10(3)	2,257	796.44	3,300	7,448,100	6,815,100	2,628,252
B-747	3,259	1,228.70	4,510	14,698,090	13,448,752	5,541,437
L-1011	2,338	1,159.71	4,510	10,544,380	9,648,108	5,230,292
B-707(4)	1,817	495.89	3,245	5,896,165	5,394,991	1,609,163
DC-8(3)	1,742	568.34	3,850	6,706,700	6,136,631	2,188,109
B-737-200	842	301.30	4,840	4,075,280	3,728,881	1,458,292
DC-9(3)	896	299.50	2,640	2,365,440	2,164,378	790,680
A-300B	1,808	542.74	1,320	2,386,560	2,183,702	716,417
Total			43,615	73,570,915	67,317,388	25,340,814
Total industry operating and fuel cost savings (per year)						92,658,202

[1] Excluding crew and fuel.

[2] Based on March 1980 of $0.88 to 0.95/gal range average for domestic trunks. Predict $1.05/gal DOE quoting CAB data.

Notes

Columns 1 and 2 are weighted averages for the airplane types listed followed by a number in parenthesis. That number indicates how many series of that type airplane are reported in *Aircraft Operating Cost and Performance Report* published by the CAB in July 1979, covering calendar years 1977 and 1978. The operating data in column 1 and 2 are CY 1978 data.

Column 3 is the product of a sample of 15 out of 33 air carriers times the factor 2.2, which represents the ratio of the population to the sample.

Environmental Impact. While it is impossible to accurately determine the environmental impact of the advanced simulation plan due to its permissive nature, it is certain that all impacts would be beneficial. Air carriers estimate that over 39,000 hours of flight training time in large turbojet aircraft were logged during 1979. This training is almost always conducted at low altitudes near major metropolitan airports. To the extent that air carriers implement the advanced simulation plan, there will be a proportionate reduction in airplane operations and related environmental effects.

It is apparent from the discussion of the benefits of this rulemaking action that the FAA has developed a program which implements Executive Order 12044 and President Carter's policy of encouraging innovative solutions to regulatory needs.

Discussion of Comments

During the comment period and its extension, the FAA received 28 comments in response to Notice 79-18.[1] These comments represented the views of individuals, airline organizations, labor organizaitons, simulator manufacturers, and other government agencies. Twenty-four commenters highly favored the proposal and four opposed it. Several commenters recommended changes to improve certain technical portions of Appendix H. These suggestions have been implemented in many cases. A discussion of each of the significant points raised by the commenters follows:

1. *Comment*—Too specific. By defining simulator requirements in Appendix H to Part 121, the FAA is setting up an inflexible set of requirements which are specific enough to stifle new simulator technology, yet not specific enough to fully define the type of simulator which will be acceptable for approval. Rather, the FAA should delete or dramatically reduce the Appendix H proposal and deal with specific simulator requirements in an advisory circular which can be amended more readily.

Response—It is essential not to stifle the development of new simulator technology. However, including minimum simulator requirements in an appendix to the regulation will not adversely affect technological development. Neither should the simulator requirements be specified in minute detail. Appendix H sets forth minimum requirements for simulators used under the advanced simulaiton plan. Minimum requirements which can be objectively measured are selected to guarantee a minimum degree of simulator sophistication and capability. While the setting of a minimum standard may result in some operators seeking merely to satisfy the minimum, the plan encourages manufacturers and operators alike to continue to strive for improvements to achieve advances

[1] The FAA received one additional comment 2½ months after the close of the comment period. Under § 11.47 of the FAR, "late filed comments are considered so far as possible without incurring expense or delay." Accordingly, the comment is considered and discussed as comment 10.

beyond the minimum. The FAA will continue to monitor the advancements in simulation and is prepared to propose amendments to the regulation if it becomes necessary in the future. The FAA is committed, however, to establishing minimum simulator requirements to ensure a minimum simulator sophistication and capability before permitting the simulator training to be substituted for training in the airplane. Detailed specifications are not included to allow technological innovation and development. Where comments showed that the Appendix H was too restrictive, the specific proposal is addressed later in this section. Setting minimum simulator requirements through the public rulemaking process ensures the widest degree of participation in the development of the requirements and provides sufficient stability in the requirements so that operators can use informed judgment in planning for and investing in simulators which may take several years to be delivered.

2. *Comment*—Motion, visual, instrument system response. Increasing the speed (response time) of the motion, visual, and instrument systems to an absolute value of 150 milliseconds as stated in simulator requirement 10 in Phase II should not be a requirement of the advanced simulation plan. The important issue is ensuring that the response of the simulator is like the airplane simulated. Further, the FAA should not require a specific test for measuring response time because of differences between simulators made by different manufacturers.

Response—The commenter is correct. The 300 and 150 millisecond response time requirements listed in Phases I and II of Appendix H are intended to be tolerances over actual airplane response times, not absolute response times. By defining specific tests in the proposal, numerous commenters were misled into thinking that they represented absolute response times rather than tolerances over airplane response times. The sections in Appendix H dealing with response times are revised to clarify that they are times for the airplane to react plus 300 or 150 milliseconds, as applicable. The tests to determine the response time are also revised to describe and clarify an acceptable test procedure, to state the required outcome of the test, and to allow the use of an equivalent test approved by the Administrator. The FAA continues to maintain the importance of considering cue correlation, that is, the relative response of motion, visual, and instrument systems, as part of the simulator programing. Therefore, Phase II simulator requirement 11 requires that the motion response occur before the visual system response, but in no case before that of the airplane or later than 150 milliseconds after the airplane would respond under the same conditions. In actual operations the airplane would have to move before the visual scene would change. This is not necessarily true in the simulator. False cues can affect training effectiveness. These response times are intended to eliminate false cues caused by a significantly slower or faster response in the simulator than in the aircraft.

3. *Comment*—Handling characteristics (Feel). While handling characteristics or "feel" are referred to in the preamble of the proposed rule, their performance comparability is not specifically addressed. Control feel dynamics should be included as crieria which an advanced simulator must meet. Further, a requirement should be included for a subjective evaluation of such characteristics by pilots experienced in the airplane type simulated. The proposed rule's quest for purely objective evaluations is understood and appreciated, but the empirical experience of pilots must not be ignored.

Response—Control feel dynamics should be included in the simulator requirements and, as adopted, Appendix H includes them. Significant benefits are to be gained from a simulator evaluation conducted by a pilot who is rated in the airplane type simulated. A pilot rated in the airplane can tie together all of the objective tests results to reach a final decision on approval of the simulator. For this reason, simulator evaluations under the plan will be conducted by an FAA national simulator evaluation team which will include pilots rated in the aircraft simulated. The requirement for control feel added as simulator requirement 10 to Phase II of Appendix H is an objective test comparing the simulator to the actual airplane. During the development of Notice 79-16, the FAA was unaware of the existence of an objective test in this area. Commenters have shown that an objective test is now possible. Due to the accuracy and impartiality of objective testing, an objective test comparing the dynamic control forces of the simulator to that of the aircraft would greatly enhance the quality of control feel of advanced simulators.

4. *Comment*—Representative vs. universal programing. Representative programing should be acceptable in presenting training situations under Phases II and III of the advanced simulation plan.

Response—Representative programing involves using specific data samples to present training situations which are "representative" of selected portions of actual operational situations as compared to presenting the full or "universal" actual situation. This might be illustrated in the case of a simulation of runway contamination. Representative programing would begin with actual airplane data for dry runway stopping distances and would apply other data-gathering techniques so that an accurate yet representative wet and icy runway could be presented in simulator training. Universal programing would require airplane flight test data for every type of runway surface and contaminant to exactly duplicate any actual operational situation. Universal programing as defined here is impractical in many situations.

The advanced simulation plan goal is to achieve a *capability* to present any actual situations which may be involved in a training program today or in the future, but not a *requirement* to actually present all situations at all times. With this in mind, visual requirement 4 in Phase II and requirement 3 in Phase III of Appendix H are revised to clarify the phase of flight intended for each requirement. Operators should be aware, however, that simulators must be programed to present the actual situations required by Appendix H and by their training programs. As training programs change, simulator programing must be changed as well. By expanding simulator capabilities under the advanced simulation plan, an operator has this flexibility.

5. *Comment*—Minimum equipment list (MEL). An MEL is essential to a viable simulator training program, but the aircraft MEL is inadequate and would unnecessarily restrict the use of the simulator. A flight simulator includes many features which are not part of the real aircraft, such as an instructor's console, motion system, and visual system, but are critical for training depending on the type of training and checking being conducted. The FAA should therefore consider an MEL specifically designed for the simulator. Further, the requirement to repair failed components within 24 hours is arbitrary and unnecessary. Economics will dictate the quickest simulator repair possible since the operator will be forced to train in the airplane if the simulator is not repaired.

Response—The commenter is correct and the MEL requirements in the introduction to Appendix H are changed to allow operation under an MEL which has been approved for the simulator by

the Administrator. For standardization purposes, the MEL will include simulator components and indicate the type of training or checking that is authorized if that component is inoperative. To accomplish this, the component will be placed in one of the following categories with any remarks applicable to that component:

1. No training or checking.
2. Training in specific maneuvers.
3. Certification and checking.
4. Line Oriented Flight Training (LOFT).

The motion system is required for all training and checking, the visual system is required at each occupied pilot position, and certain components, such as those associated with thunderstorm presentations, may be required for certain portions of recurrent training but may not be required for certification checking. Components such as these should be annotated in the remarks section of the simulator MEL. However, if an instructor is occupying one of the pilot seats, the side window visual display of that seat may be inoperative. Since § 121.407 requires simulator discrepancies to be written into a daily discrepancy log, this log can be compared against the simulator MEL to show operational compliance with the MEL.

6. *Comment*—Check airman or instructor experience and training. There is no argument that experienced instructors and check airmen must be used in the advanced simulation program or that they may require special training. However, the experience and training proposed throughout Notice 79-18 should not be the only acceptable means. Rather, each operator should be allowed to submit a plan for selecting and training these personnel. This would provide flexibility so that the industry could operate within existing labor agreements and overall training programs.

Response—The comment has merit, in general, but a minimum instructor or check airman experience level and training time is being set for training conducted under the advanced simulation plan. The most sophisticated simulator can be of little value without an experienced, well-trained instructor or check airman to operate it. Because simulators will be used to totally replace the airplane in the areas allowed under a particular phase of the advanced simulation plan, the FAA wants to ensure that the instructors or check airmen involved are given a minimum amount of initial and recurrent training. Some flexibility over what was proposed in Notice 79-18, however, is warranted. Therefore, Appendix H is revised to consolidate all check airman and instructor experience and training requirements into an introductory section. The section requires each operator involved in Phase II, IIA, and III training to operate according to an advanced simulation training program approved by the Administrator which, in part, shows the following:

a. Documentation that each instructor and check airman has been employed by the certificate holder for at least 1 year in that capacity or as a pilot in command or second in command in an airplane of the group in which that pilot is instructing or checking.

b. A procedure to ensure that each instructor and check airman actively participates in either an approved regularly scheduled line flying program as a flight crewmember or an approved line observation program in the same airplane type in which that person is instructing or checking. This requirement ensures that the instructor or check airman is participating in the operator's line operations and can bring current experience to the training program.

c. A procedure to ensure that each instructor and check airman is given a minimum of 4 hours of training each year to become familiar with the operator's advanced simulation training program, or changes to it, and to emphasize their respective roles in the program. Training for simulator instructors and check airmen shall include training policies and procedures, instruction methods and techniques, operation of simulator controls (including environmental and trouble panels), limitations of the simulator, and minimum equipment required for each course of training.

7. *Comment*—First officer to captain upgrade experience requirements. The 5,000-hour flight time experience requirement set forth in Phase II of the proposal for pilots who have not previously flown the airplane type is excessive. Requiring 1,000 to 2,500 hours is more reasonable in that only 500 hours are required for pilots who have previously flown the airplane type.

Response—The comment has merit. The requirement ensures that a pilot has adequate experience to upgrade into an airplane which the pilot has never flown. The comment described above represents the views of an industry organization and a pilot professional group. Both have extensive expertise in evaluating pilot experience levels. Reconsidering the 5,000-hour proposal in light of the comment and considering the 500-hour requirement for pilots who have previously flown the same type of airplane, the FAA has concluded that the proposal should be modified. Phase II, Item 2(b)(ii), therefore, is changed to require a total of 2,500 hours of pilot experience on any two airplanes of the same group prior to upgrade under Phase II into another airplane in that group. This provides an acceptable level of safety. Pilots not meeting any portion of the eligibility requirements for upgrade under Phase II must receive initial training which must be conducted in the airplane or a Phase III simulator.

8. *Comment*—Computer capability. Many approaches exist relative to measurement of computer capabilities, making a single standard of acceptance difficult to apply to all computer manufacturers. The FAA should therefore change the reference in Phase II simulator requirement 7 of Appendix H to require simulator computer capacity, accuracy, resolution, and dynamic response to meet Phase II demands.

Response—A minimum simulator computer capacity, accuracy, resolution, and dynamic response is necessary to meet Phase II demands, especially with regard to fidelity of simulation. Setting objective criteria which ensure a certain level of computer sophistication lets the FAA ensure with more certainty that the simulator is capable of meeting varying training demands. The regulation requires "resolution *equivalent to* that of at least a 32-bit word length computer . . ." for critical aerodynamic programs. There are many different approaches which may be used to satisfy this requirement, including using 16-bit word computers with double precision software, or 24-bit computers with floating point software, for example. In this context, under Phase II of the advanced simulation plan, a computer which can show a minimum capability equivalent to or greater than a 32-bit computer is acceptable.

9. *Comment*—Built-in test procedure or equipment. Item 3 of the Phase II visual system requirements asks for a built-in test procedure. Items 5 and 6 of the Phase III simulator requirements ask for self-testing and diagnostic analysis capabilities. Do these requirements refer to procedures for testing the simulator or equipment which will automatically test the equipment? Fully automated test equipment for visual systems, if available, will not be economically feasible.

Response—These Phase II and III requirements were misunderstood by several commenters. The Phase II built-in visual test procedure was conceived to be a test procedure aided by a software model which could be entered into the visual system computer to assist the FAA and the operator in quickly

evaluating the visual system. The test procedure could consist of a test pattern or series of test patterns designed so that an inspector or maintenance technician could sit in the pilot seat and visually confirm the visual system color, Runway Visual Range (RVR), focus, intensity, level horizon, and attitude as compared with the simulator attitude indicator. There would be a software model within the computer so that special test equipment would not need to be brought into the simulator. The test procedure would be aided by a special visual system program to facilitate a quick and reasonably accurate evaluation of the visual system at each pilot's position and between pilots' positions. This requirement is designed to quickly pick up visual system errors and would not replace the very involved and precise visual system tests that the operator needs to perform to align the visual system.

The Phase III simulator requirements concerning self-testing and diagnostic analysis require fully automatic testing of simulator hardware and software and include a printout of simulator malfunctions as they occur. The automatic testing described in Phase III refers to the tests required for FAA initial and recurring approval and not necessarily complete testing of all software and circuitry. As simulator technology advances, this requirement will be essential for the FAA to effectively evaluate and monitor an operator's simulators. The self-testing requirement will provide more accurate data for comparing the simulator with the airplane and will allow a much more thorough evaluation in less time. This will result in benefits to the operator by reducing simulator down time. Diagnostic printouts will be in enough detail to be compared with the simulator MEL to determine the training status of the simulator each day, and will facilitate recordkeeping which will assist the FAA's surveillance of the operator's approved advanced simulation training program. The diagnostic printouts must be retained by the operator as part of the daily discrepancy log already required by § 121.407(a)(5) to show MEL compliances between recurring simulator evaluations. Appendix H, Phase III, simulator requirement 5, is revised to clarify this requirement.

10. *Comment*—Phase II visual system field of view. Some commenters favored an expanded field of view up to 90°. Others disagreed stating that exprienced airmen only need a limited field of view.

Response—A field of view of at least 75° horizontal is essential to a realistic visual presentation. Such areas as roll rate, landing, circling approaches, and ground taxiing maneuvers are greatly enhanced by expanded fields of view. In visual requirement 5 of Phase II, visual gaps may occur only as they would in the airplane simulated or as required by visual system hardware. Because the visual system dramatically impacts the reality of the simulator training experience, it is important that multiple visual system displays be edge-matched and designed with appropriate visual overlaps so that visual system gaps do not occur except as they would in the airplane. The size and location of different airplane windows, however, may require some shifting of visual system displays (which may be smaller than the actual window) so that, for example, the pilot can keep the runway in sight through a side window on a circling approach. Visual system hardware may therefore produce a slight gap in a certain portion of the field of view which cannot be avoided. Under these circumstances, a slight gap "required by visual system hardware" may be approved if the Administrator finds that the simulation is not adversely affected. The vertical field of view shall be 30° minimum. The visual system should be aligned so that the visual cutoff angle is accurate at the lower edge of the presentation and the upper edge of the presentation allows sufficient field of view above the horizon to see buildings and obstacles on the ground without distracting visual restrictions.

11. *Comment*—Visual effects. Visual effects such as weather presentations should be limited to specific phases of flight. Further, the Phase II visual requirement for partial obscuration of ground scenes (Item 4) should be deleted because visual systems are unable to portray curved lines and therefore clouds will be unrealistic.

Response—Requirements involving visual effects should be described according to a specific phase of flight. This point was also described in Comment No. 4. Within the context of a final approach to landing, however, the requirement for partial obscuration of ground scenes is valid. Most actual instrument approaches involve flying through scattered to broken cloud decks where the ground is visible but the runway is obscured by clouds. This results in "duck under" accidents because pilots go below minimum altitudes to see the runway, causing the airplane to contact an obstruction or land short of the runway. With the Phase II partial obscuration requirement, training designed to provide pilot experience in this area will be possible and safety will be enhanced.

While curved lines are difficult to produce in today's visual systems, a combination of trapezoidal occulting and reduced visibility could provide a realistic effect. Simulator manufacturers have assured the FAA that this requirement is not unreasonable and is within today's state-of-the-art.

12. *Comment*—Daylight visual system. There appears to be only two, or possibly three, valid user-defined requirements for a daylight visual system. They are:

a. The ability to realistically portray the difficult runway environment acquisition problem of a daytime low-visibility approach.

b. The ability to allow a cockpit lighting level in which pilots can accurately read charts and approach plates without undue diversion of attention from other flying tasks.

c. Some argue that for inexperienced pilots the daylight environment is less threatening and allows for more rapid orientation during visual approaches and landings. It is presumably for this reason that daylight visual systems are required by the proposed rule for initial trainees.

Due to the voluminous technical specifications required to define an adequate system, the definition of a daylight visual system should be in general operational terms rather than technical terms. The proposed rules sets forth only a few discrete technical specifications, and thus inadequately describes a proper daylight visual system. Such an approach also allows a situation in which literal compliance with the rule might well produce, operationally, a totally inadequate daylight visual system. Additionally, several of the specifications proposed (for example, surfaces and edges) discriminate against competent conceptual approaches to daylight visual simulation by certain manufacturers, and preclude technological advancement in a promising direction which may make the number of surfaces and edges meaningless. Other specifications in Notice 79-18 should not be assigned absolute values in the absence of known values for the many other variables in the daylight system. In fact, a requirement to literally meet only a few specifications could well result in a degradation of the dusk and night presentations which now enjoy great acceptance by the user pilots.

Response—Since the majority of air carrier flying time is during daylight hours and for the reasons cited above, the FAA is committed to encouraging

advances in the state-of-the-art in visual systems by requiring a daylight scene in the Phase III visual requirement 1. As described in Comment No. 1, objective simulator and visual system requirements are selected to guarantee a minimum degree of system sophistication and capability. Once the objective requirements are met, the visual system's ability to present the required visual effects will be evaluated subjectively. The system must, however, meet the objective criteria listed in Phase III to be considered a daylight system. Detailed specifications are not included to allow technological development. As technology progresses, any daylight visual system which can show equivalent capabilities in the objective areas described in Phase III will be considered for subjective approval.

In this regard, the requirement for 1,000 surfaces or 4,000 edges is amended to include the phrase "comparable in detail to that produced by 4,000 edges. . . ." The 1,000 surfaces or 4,000 edges are included to establish a minimum scene content capability. When technology progresses to where a specific number of edges and surfaces are unnecessary, a perceived scene content at least comparable in detail will be acceptable.

This scene content should be designed so that the airport and major landmarks can be recognized from 5 miles from the airport with detail unnoticably shifting to the runway environment as the airplane approaches landing. Detail on final approach should assist the pilot to visually asssess the airplane sink rate and provide cues to improve depth perception. The total daylight cockpit environment requirement in visual requirement 1 is also revised to include a provision that it must at least represent the amount of light in the cockpit on an overcast day. This has been done to clear up a misunderstanding that sunlight needs to shine in the window. The criteria included in the rule describe the lighting effect of an overcast day. This amount of light allows a pilot to read navigation charts without other cockpit lighting and allows an instructor to more easily observe the student's actions during simulator training.

13. *Comment*—Loss of Phase IIA training. The phrase "Any simulator not upgraded according to the operator's approved simulator upgrade program will void the plan resulting in loss of all Phase IIA Training" in the introduction to Phase IIA is too encompassing and would end Phase IIA training on one aircraft if a simulator for a different aircraft were not upgraded as proposed in the plan. It should be changed to read: "Any simulator not upgraded according to the operator's approved simulator plan will result in loss of Phase IIA training for that aircraft type."

Response—Phase IIA is an interim program designed to provide economic incentive for operators upgrading a large segment of their simulator fleet. All simulators entered into the plan must be upgraded according to the plan. Plans should be realistic and be based on firm commitments. One objective of the advanced simulation plan is to issue the Part 61 airline transport pilot (ATP) certificate upon successful completion of the appropriate simulator check. However, a second objective is to upgrade operators' simulator capabilities to present realistic training in various abnormal and weather flight conditions which may be encountered during line operations. If an operator fails to meet its commitment to the approved plan, it has achieved the economic benefit expressed in the first objective because it has avoided the airplane flights. By not upgrading the simulator, however, it has failed to provide a simulator capable of achieving the second objective of the plan. Both objectives are essential to the plan.

14. *Comment*—Six-axis motion systems. Specifying a six-axis motion system could hamper advanced research and development of a superior method of providing motion cues. It is therefore recommended that this requirement be changed to read: "A system which provides motion cues equal to or better than those provided by a six-axis freedom of motion system."

Response—While the FAA is unaware of any technology more advanced than the six-axis system, a new system could be acceptable if better technology becomes available. The Phase II simulator requirement 4 is revised as recommended. However, the FAA will not approve a visual system instead of a motion system because visual systems are incapable of providing motion onset cues.

15. *Comment*—Psychological considerations. One important factor has been overlooked in the study contained in the NPRM; that is, the psychological considerations of flight. An atmosphere of complacency is prevalent while operating a simulator irrespective of its sophistication. This psychological phenomenon is present because of the knowledge that, regardless of what mistakes are committed, the consequences of actions are negated because a simulator cannot crash.

Response—In point of fact, almost the exact opposite is true. Pilots do not fly airplanes out of a sense of fear. Further, actual airplane training flights are not conducted in adverse weather conditions. A flight instructor would not intentionally allow a trainee to get the airplane into a position which would jeopardize safety. Simulator training on the other hand is designed to facilitate training in varying environmental conditions and to let the trainee learn from mistakes. If a pilot makes a tragic mistake in a simulator, the simulator will dramatically simulate a crash and there is no doubt as to who made the mistake. The pilot's self esteem, peer pressure, and the pressure of being observed by one's employer and possibly the FAA can exceed the psychological pressure of flying the airplane. Appendix H and § 121.433 will continue to require line operating experience which ensures that each new airline captain is supervised by a company check pilot who is serving as pilot in command on the new captain's first flights on the line.

16. *Comment*—The plan is unfair and unsafe. One commenter opposes the proposed advanced simulation plan because the plan is deficient in the following respects: (1) The plan allows for the increased use of simulators without showing that it will not decrease safety; (2) The plan phases in the use of simulators too fast relative to existing and potential simulator technology; and (3) The plan fails to take into account the ultimate limits on the use of simulators.

Response—The main thrust of the advanced simulation plan is to improve safety by encouraging operators to upgrade their simulators and to produce better-trained flightcrews. In additon to the lengthy discussion of safety benefits in this preamble and Notice 79-18, the notice (see 44 FR 65552, column 1; November 13, 1979) references two FAA operational studies which helped to show that existing upgrade and transition training requirements can be accomplished in simulators which are not as sophisticated as those required in the advance simulation plan. Further, NASA has dramatically illustrated the ability of a pilot to successfully accomplish total training in a simulator as evidenced by its putting several men on the moon without having flown in the craft before. Commenters from all sides of the issue, including air carriers, pilot organizations, airline passenger organizations, and the National Transportation Safety Board, support the advanced simulation plan. This

commenter provided no data to show how safety would be compromised.

With regard to point 2, simulators are only a portion of a total training program which must be approved for the operator. With regard to the simulator, the three phases of the advanced simulation plan are designed to provide incentives to upgrade the simulators to a level which results in the safety benefits described under point 1. Simulator technology for Phase II is currently available to the industry and Phase III will be available within 5 years. By presenting a complete plan for simulator upgrade, it will be advantageous to airplane operators to introduce this technology into their training programs. If a complete plan is not presented, or if the timing expressed in the plan is altered, the training improvements needed to provide for safer flight operations will not be achieved.

Point 3 was discussed previously as Comment 15.

In developing this plan, the FAA gave full consideration to section 601(b) of the Federal Aviation Act of 1958, which states that the "Administrator shall give full consideration to the duty resting upon air carriers to perform their services with the highest possible degree of safety in the public interest. . . ." The rule is consistent with that statutory requirement.

Points of Clarification

In addition to the major points raised by commenters, numerous points of clarification were raised concerning the interpretation of technical requirements. Thus, Appendix H is amended in several areas to clarify wording proposed in Notice 79-18. These points include consolidating all requirements common to several phases of the plan into the introduction of Appendix H and making the following minor changes to wording used in the Notice:

1. Phase II, "Training and Checking Permitted," is amended to show that transition training is for all pilot positions, not just pilot in command.

2. Phase II, Simulator Requirement 7, is amended to delate "and Phase III Demands" which is inappropriate in Phase II.

3. Phase II, Visual Requirement 1, is amended to clarify that at least three specific airport representations must be included in the simulator but that all airport representations need not be specific. Also "a capability of" ten levels of occulting is added to this requirement to show that each visual scene need not have ten levels if it is inappropriate.

4. Phase II, Visual Requirement 5, is amended to state that both visual systems shall "be able to" be operated. This clarifies the intent that pilot visual systems may be included in the MEL, but when operative, must work in both pilot positions.

The Amendment

Accordingly, Parts 61 and 121 of the Federal Aviation Regulations (14 CFR Parts 61 and 121) are amended as follows, effective July 30, 1980.

PART 61—CERTIFICATION: PILOTS AND FLIGHT INSTRUCTORS

1. By revising § 61.157 by adding a new paragraph (e) to read as follows:

§ 61.157 Airplane rating: Aeronautical skill.

* * * * *

(e) An approved simulator may be used instead of the airplane to satisfy the in-flight requirements of Appendix A of this Part, if the simulator—

(1) Is approved under § 121.407 of this chapter and meets the appropriate simulator requirements of Appendix H of Part 121; and

(2) Is used as part of an approved program that meets the training requirements of § 121.424 (a) and (c) and Appendix H of Part 121 of this chapter.

PART 121—CERTIFICATION AND OPERATIONS: DOMESTIC, FLAG, AND SUPPLEMENTAL AIR CARRIERS AND COMMERCIAL OPERATORS OF LARGE AIRCRAFT

2. By revising § 121.407 by adding a new paragraph (c) to read as follows:

§ 121.407 Training program: Approval of airplane simulators and other training devices.

* * * * *

(c) An airplane simulator may be used instead of the airplane to satisfy the in-flight requirements of §§ 121.439 and 121.441 and Appendices E and F of this Part, if the simulator—

(1) Is approved under this section and meets the appropriate simulator requirements of Appendix H of this Part; and

(2) Is used as part of an approved program that meets the training requirements of §121.424 (a) and (c) and Appendix H of this Part.

3. By adding a new Appendix H to Part 121 which reads as follows:

Appendix H—Advanced Simulation Plan

This Appendix provides guidelines and a means for achieving flightcrew training an advanced airplane simulators. This plan for achieving the goal of advanced simulation consists of three major phases and an interim phase to facilitate the plan's implementation. The three-phase plan is to provide standards for a progressive upgrade of airplane simulators so that the total scope of flightcrew training can be enhanced. Each phase builds on the preceding phase so that the final advanced simulation phase includes all the requirements of preceding phases. This Appendix describes the simulator and visual system requirements which must be achieved to obtain approval of certain types of training in the simulator. The requirements in this Appendix are in addition to the simulator approval requirements in § 121.407. Each simulator which is used under this Appendix must be approved as a Phase I, II, or III simulator, as appropriate.

To obtain FAA approval of the simulator for a specific phase, the following must be demonstrated to the satisfaction of the Administrator:

1. Documented proof of compliance with the appropriate simulator, visual system, and additional training requirements of this Appendix for the phase for which approval is requested and preceding phases, if appropriate.

2. An evaluation of the simulator to ensure that its ground, flight, and landing performance matches the type of airplane simulated (Phase I Approval Tests).

3. An evaluation of the appropriate simulator and visual system requirements of the phase for which approval is requested and preceding phases, if appropriate.

Changes to Simulator Programing:

While a need exists for some flexibility in making changes in the software program, strict scrutiny of these changes is essential to ensure that the simulator retains its ability to duplicate the airplane's flight and ground characteristics. Therefore, the following procedure must be followed to allow these changes without affecting the approval of an Appendix H simulator:

1. Twenty-one calendar days before making changes to the software program which might impact flight or ground dynamics of an Appendix H simulator, a complete list of these planned changes, including dynamics related to the motion and visual systems, must be provided in writing to the FAA office responsible for conducting the recurrent evaluation of that simulator.

2. If the FAA does not object to the planned change within 21 calendar days, the operator may make the change.

3. Changes which might affect the approved simulator Phase I test guide must be tested by the operator in the simulator to determine the impact of the change before submission to the FAA.

4. Software changes actually installed must be summarized and provided to the FAA. When the operator's test shows a difference in simulator performance due to a change, an amended copy of the test guide page which includes the new simulator test results will also be provided to update the FAA's copy of the test guide.

5. The FAA may examine supporting data or flight check the simulator, or both, to ensure that the aerodynamic quality of the simulator has not been degraded by any change in software programing.

6. All requests for changes are evaluated on the basis of the same criteria used in the initial approval of the simulator for Phase I, II, or III.

Simulator Minimum Equipment List (MEL):

Because of the strict tolerances and other approval requirements of Appendix. H simulators, the simulator can provide realistic training with certain nonessential items inoperative. Therefore, an operator may operate its simulator under an MEL which has been approved by the Administrator for that simulator. The MEL includes simulator components and indicates the type of training or checking that is authorized if the component becomes inoperative. To accomplish this, the component is placed in one of the following categories along with any remarks applicable to the component's use in the training program:

1. No training or checking.
2. Training in specific maneuvers.
3. Certification and checking.
4. Line Oriented Flight Training (LOFT).

Advanced Simulation Training Program:

For an operator to conduct Phase II, IIA, or III training under this Appendix all required simulator instruction and checks must be conducted under an advanced simulation training program must also ensure that all instructors and check airmen used in Appendix H training and checking are highly qualified to provide the training required in the training program. The advanced simulation training program shall include the following:

1. The operator's initial, transition, upgrade, and recurrent simulator training programs and its procedures for re-establishing recency of experience in the simulator.

2. How the training program will integrate Phase I, II, and III simulators with other simulators and training devices to maximize the total training, checking, and certification functions.

3. Documentation that each instructor and check airman has been employed by the certificate holder for at least 1 year in that capacity or as a pilot in command or second in command in an airplane of the group in which that pilot is instructing or checking.

4. A procedure to ensure that each instructor and check airman actively participates in either an approved regularly scheduled line flying program as a flight crewmember or an approved line observation program in the same airplane type for which that person is instructing or checking.

5. A procedure to ensure that each instructor and check airman is given a minimum of 4 hours of training each year to become familiar with the operator's advanced simulation training program, or changes to it, and to emphasize their respective roles in the program. Training for simulator instructors and check airmen shall include training policies and procedures, instruction methods and techniques, operation of simulator controls (including environmental and trouble panels), limitations of the simulator, and minimum equipment required for each course of training.

6. A special Line Oriented Flight Training (LOFT) program to facilitate the transition from the simulator to line flying. This LOFT program consists of at least a 4-hour course of training for each flightcrew. It also contains at least two representative flight segments of the operator's route. One of the flight segments contains strictly normal operating procedures from push back at one airport to arrival at another. Another flight segment contains training in appropriate abnormal and emergency flight operations.

7. For operators training under Phase IIA, the additional training requirements of that phase.

Phase I

Training and Checking Permitted

1. Regency of experience (§ 121.439).
2. Night takeoffs and landings (Part 121, Appendix E).
3. Landings in a proficiency check without the landing on the line requirements (§ 121.441).

Simulator Requirements

1. Aerodynamic programing to include:

a. Ground effect—for example, roundout, flare, and touchdown. This requires data on lift, drag, and pitching moment in ground effect.

b. Ground reaction—Reaction of the airplane upon contact with the runway during landing to include strut deflections, tire friction, and side forces.

c. Ground handling characteristics—steering inputs to include crosswind, braking, thrust reversing, deceleration, and turning radius.

2. Minimum of 3-axis freedom of motion systems.

3. Phase I landing maneuver test guide to verify simulator data with actual airplane flight test data, and provide simulator performance tests for Phase I initial approval.

4. Multichannel recorders capable of recording Phase I performance tests.

Visual Requirements

1. Visual system compatibility with aerodynamic programing.

2. Visual system response time from pilot control input to visual system output shall not exceed 300 milliseconds more than the movement of the airplane to a similar input. Visual system response time is defined as the completion of the visual display scan of the first video field containing different information resulting from an abrupt control input.

3. A means of recording the visual response time for comparison with airplane data.

4. Visual cues to assess sink rate and depth perception during landings.

5. Visual scene to instrument correlation to preclude perceptible lags.

Phase II

Training and Checking Permitted

1. For all pilots, transition training between airplanes in the same group, and for a pilot in command the certification check required by § 61.157 of this chapter.

2. Upgrade to pilot-in-command training and the certification check when—

a. The pilot—(i) Has previously qualified as second in command in the equipment to which the pilot is upgrading;

(ii) Has at least 500 hours of actual flight time while serving as second in command for the operator in an airplane in the same group; and

(iii) Is currently serving as second in command with that operator in an airplane in this same group; or

b. The pilot is employed by an airplane operator and—(i) is currently serving as second in command with that operator in an airplane of the same group;

(ii) has a minimum of 2,500 flight hours as second in command in airplanes of the same group with that operator; and

(iii) has served as second in command on at least two airplanes of the same group with that operator.

Pilots qualifying under paragraph 2.b. of this paragraph may upgrade to another airplane in that group in which that pilot has not been previously qualified.

Simulator Requirements

1. Representative crosswind and three-dimensional windshear dynamics based on airplane related data.
2. Representative stopping and directional control forces for at least the following runway conditions based on airplane related data:
a. Dry.
b. Wet.
c. Icy.
d. Patchy wet.
e. Patchy icy.
f. Wet on rubber residue in touchdown zone.
3. Representative brake and tire failure dynamics (including antiskid) and decreased brake efficiency due to high brake temperatures based on airplane related data.
4. A motion system which provides motion cues equal to or better than those provided by a six-axis freedom of motion system.
5. Operational principal navigation systems, including electronic flight instrument systems, INS, and OMEGA, if applicable.
6. Means for quickly and effectively testing simulator programing and hardware.
7. Expanded simulator computer capacity, accuracy, resolution, and dynamic response to meet Phase II demands. Resolution equivalent to that of at least a 32-bit word length computer is required for critical aerodynamic programs.
8. Timely permanent update of simulator hardware and programing subsequent to airplane modification.
9. Sound of precipitation and significant airplane noises perceptible to the pilot during normal operations and the sound of a crash when the simulator is landed in excess of landing gear limitations.
10. Aircraft control feel dynamics shall duplicate the airplane simulated. This shall be determined by comparing a recording of the control feel dynamics of the simulator to airplane measurements in the takeoff, cruise, and landing configuration.
11. Relative responses of the motion system, visual system, and cockpit instruments shall be coupled closely to provide integrated sensory cues. These systems shall respond to abrupt pitch, roll, and yaw inputs at the pilot's position within 150 milliseconds of the time, but not before the time, when the airplane would respond under the same conditions. Visual scene changes from steady state disturbance shall not occur before the resultant motion onset but within the system dynamic response tolerance of 150 milliseconds. The test to determine compliance with these requirements shall include simultaneously recording the analog output from the pilot's control column and rudders, the output from an accelerometer attached to the motion system platform located at an acceptable location near the pilots' seats, the output signal to the visual system display (including visual system analog delays), and the output signal to the pilot's attitude indicator or an equivalent test approved by the Administrator. The test results in a comparison of a recording of the simulator's response to actual airplane response data in the takeoff, cruise, and landing configuration.

Visual Requirements

1. Dusk and night visual scenes with at least three specific airport representations, including a capability of at least 10 levels of occulting, general terrain characteristics, and significant landmarks.
2. Radio navigation aids properly oriented to the airport runway layout.
3. Test procedures to quickly confirm visual system color, RVR, focus, intensity, level horizon, and attitude as compared to the simulator attitude indicator.
4. For the approach and landing phase of flight, at and below an altitude of 2,000 feet height above the airport (HAA) and within a radius of 10 miles from the airport, weather representations including the following:
a. Variable cloud density.
b. Partial obscuration of ground scenes; that is, the effect of a scattered to broken cloud deck.
c. Gradual break out.
d. Patchy fog.
e. The effect of fog on airport lighting.
f. Category II and III weather conditions.
5. Continuous minimum visual field of view of 75° horizontal and 30° vertical per pilot seat. Visual gaps shall occur only as they would in the airplane simulated or as required by visual system hardware. Both pilot seat visual systems shall be able to be operated simultaneously.
6. Capability to present ground and air hazards such as another airplane crossing the active runway or converging airborne traffic.

Phase IIA

Interim Simulator Upgrade Plan for Part 121 Operators

Under Phase IIA, any Part 121 operator may conduct Phase II training for 3½ years from the date it was approved for Phase I in a simulator approved for the landing maneuver under Phase I. The operator must meet the additional requirements set forth below and submit a plan acceptable to the Administrator to upgrade its simulator(s) to meet Phase II standards. For a carrier's upgrade plan to be acceptable, it must—
1. Be submitted to the FAA before July 30, 1981.
2. Show which simulators will be upgraded to Phase I requirements and their projected upgrade dates;
3. Show that these simulators will meet Phase I requirements before January 30, 1983.
4. Show that at least 50 percent of the operator's simulators for those airplane types for which Phase IIA training is expected will be upgraded to, or be replaced with, simulators which meet Phase II or III requirements and—
a. Show which simulators will be upgraded to, or replaced with, simulators which meet phase II or III requirements; and
b. Show that each of these simulators will meet Phase II or III requirements within 3½ years after the date it is approved for Phase I; and
5. Include an advanced simulation training program which meets the requirements of this appendix.
To conduct Phase IIA training in a Phase I simulator, all required simulator instruction and checks must be conducted in a simulator as part of an advanced simulator training program approved for the operator, including the additional training requirements of this phase.
Phase IIA interim approval ends for each Phase I simulator listed in the operator's approved plan 3½ years after that simulator is approved for Phase IIA training. Approval of the plan is withdrawn if any simulator is not upgraded according to the operator's approved simulator upgrade plan. This results in the loss of all Phase IIA training for that operator. Extension of Phase IIA training will not be considered.
Training and checking permitted: Same as Phase II.
Simulator requirements: Same as Phase I.
Visual requirements: Same as Phase I.
Additional training requirements:
1. In addition to the simulator training and the simulator certification and

proficiency check, and before the line-operating experience training, participating flight crewmembers must complete a 4-hour Line Oriented Flight Training Course in the simulator to prepare them to perform line duties.

2. Each participating pilot in command must be given operating experience in the airplane to include 5 landings and 25 flight hours, and each second in command must be given 3 landings and 15 flight hours of line experience at his or her crew station under the supervision of a check airman who meets the qualifications of paragraph 3 and who is seated in the other pilot's position.

3. Each participating line check airman must be given an approved 4-hour training course to familiarize him or her with the Phase IIA program and to emphasize his or her role in the program. He or she shall also be qualified to provide both line and proficiency checks or be a line check airman who has successfully completed an approved simulator check airman course.

Phase III

Training and Checking Permitted

Except for the requirements listed in the next sentence, all pilot flight training and checking required by this Part and the certification check requirements of § 61.157 and Appendix A of Part 61 of this chapter. The line check required by § 121.440, the static airplane requirements of Appendix E of this Part, and the operating experience requirements of § 121.434 must still be performed in the airplane.

Simulator Requirements

1. Characteristic buffet motions that result from operation of the airplane (for example, high-speed buffet, extended landing gear, flaps, nose-wheel scuffing, stall) which can be sensed at the flight deck. The simulator must be programed and instrumented in such a manner that the characteristic buffet modes can be measured and compared to airplane data. Airplane data are also required to define flight deck motions when the airplane is subjected to atmospheric disturbances such as rough air and cobblestone turbulence. General purpose disturbance models that approximate demonstrable flight test data are acceptable.

2. Aerodynamic modeling for aircraft for which an original type certificate is issued after June 1, 1980, including low-altitude, level-flight ground effect, mach effect at high altitude, effects of airframe icing, normal and reverse dynamic thrust effect on control surfaces, aero-elastic representations, and representations of nonlinearities due to side slip based on airplane flight test data provided by the manufacturer.

3. Realistic amplitude and frequency of cockpit noises and sounds, including precipitation static and engine and airframe sounds. The sounds shall be coordinated with the weather representations required in visual requirement No. 3.

4. Self-testing for simulator hardware and programing to determine compliance with Phase I, II, and III simulator requirements.

5. Diagnostic analysis printout of simulator malfunctions sufficient to determine MEL compliance. These printouts shall be retained by the operator between recurring FAA simulator evaluations as part of the daily discrepancy log required under § 121.407(a)(5).

Visual Requirements

1. Daylight, dusk, and night visual scenes with sufficient scene content to recognize a specific airport, the terrain, and major landmarks around that airport and to successfully accomplish a visual landing. The daylight visual scene must be part of a total daylight cockpit environment which at least represents the amount of light in the cockpit on an overcast day. For the purpose of this rule, daylight visual system is defined as a visual system capable of producing, as a minimum, full color presentations, scene content comparable in detail to that produced by 4,000 edges or 1,000 surfaces for daylight and 4,000 light points for night and dusk scenes, 6-foot lamberts of light at the pilot's eye (highlight brightness), 3-arc minutes resolution for the field of view at the pilot's eye, and a display which is free of apparent quantization and other distracting visual effects while the simulator is in motion. The simulation of cockpit ambient lighting shall be dynamically consistent with the visual scene displayed. For daylight scenes, such ambient lighting shall neither "washout" the displayed visual scene nor fall below 5-foot lamberts of light as reflected from an approach plate at knee height at the pilot's station and/or 2-foot lamberts of light as reflected from the pilot's face.

2. Visual scenes portraying representative physical relationships which are known to cause landing illusions in some pilots, including short runway, landing over water, runway gradient, visual topographic features, and rising terrain.

3. Special weather representations which include the sound, visual, and motion effects of entering light, medium, and heavy precipitation near a thunderstorm on takeoff, approach, and landings at and below an altitude of 2,000 feet HAA and within a radius of 10 miles from the airport.

4. Phase II visual requirements in daylight as well as dusk and night representations.

5. Wet and, if appropriate for the operator, snow-covered runway representations, including runway lighting effects.

6. Realistic color and directionality of airport lighting.

7. Weather radar presentations in aircraft where radar information is presented on the pilot's navigation instruments.

(Secs. 313, 601, 603, 604, Federal Aviation Act of 1958, as amended (49 U.S.C. 1354, 1421, 1423, 1424); sec. 6(c), Department of Transportation Act (49 U.S.C. 1655(c)))

Note.—The FAA has determined that this document involves a regulation which is not significant under Executive Order 12044 as implemented by DOT Regulatory Policies and Procedures (44 FR 11034; February 26, 1979). A copy of the final regulatory evaluation prepared for this action is contained in the regulatory docket. A copy of it may be obtained by contacting the person identified above under the caption "For Further Information Contact."

Issued in Washington, D.C., on June 24, 1980.

Quentin S. Taylor,

Deputy Administrator.

[FR Doc. 80-19492 Filed 6-27-80; 8:45 am]

BILLING CODE 4910-13-M

federal register

Monday
June 30, 1980

Part VI

Environmental Protection Agency

Control of Air Pollution From New Motor Vehicles and New Motor Vehicle Engines—Alternative Durability Program

ENVIRONMENTAL PROTECTION AGENCY

40 CFR Part 86

[FRL 1498-6; Docket No. A-80-24]

Control of Air Pollution From New Motor Vehicles and New Motor Vehicle Engines—Alternative Durability Program

AGENCY: Environmental Protection Agency.

ACTION: Final rule.

SUMMARY: These regulations establish an optional pilot program to evaluate an alternative method of determining the durability of emission control in new light-duty vehicles and light-duty trucks. EPA anticipates that a future mandatory durability-data program of this type would reduce motor vehicle certification costs and increase data reliability. EPA will use the information it collects from this pilot program to assess the advantages and cost saving potential of making the program mandatory. If EPA proposes a mandatory program as a result of this pilot effort, the Agency will issue a Notice of Proposed Rulemaking providing the opportunity for public comment.

DATES: These regulations are effective June 30, 1980.

FOR FURTHER INFORMATION CONTACT: Thomas M. Ball, Technical Support Staff, Certification Division, 2565 Plymouth Road, Ann Arbor, Michigan 48105, Phone: (313) 668-4280.

SUPPLEMENTARY INFORMATION: The program offered by this regulation is optional. Manufacturers of light-duty vehicles and light-duty trucks may voluntarily follow the alternative procedures of this regulation instead of the current procedures required in Subpart A of 40 CFR Part 86. This optional program, called the Alternative Durability Program, provides a more flexible, less costly procedure to determine vehicle deterioration factors (d.f.'s). D.f.'s are used in the annual motor vehicle certification process to determine if the new vehicles are capable of meeting the current emission standards over their useful lives.

Manufacturers that elect to participate in this program will be responsible for attesting to the validity of d.f.'s that they establish by alternative means. The manufacturer may determine d.f.'s by any means it deems as appropriate, or may attest to the validity of d.f. estimates that are determined by the procedures minimally required in the Alternative Durability Program. In either case, the manufacturer must provide information to update the minimum d.f.'s each year. (The procedures to establish and update the minimum d.f.'s are outlined below.)

EPA will automatically approve the use of d.f.'s that the manufacturer determines and attests are valid, and that are equal to or greater than the minimum d.f.'s. EPA will not approve the use of d.f.'s that are lower than the minimum d.f.'s.

The detailed procedure to determine the minimum d.f. estimate is explained later in this preamble. (See "Alternative Durability Program Description.") EPA believes that this is a valid procedure to estimate d.f.'s. Briefly, the basic procedure is as follows: EPA will organize engine families with similar designs and emission control systems into engine family groups. Each engine family group will be assigned d.f.'s (one d.f. for each pollutant) that are calculated based on historical certification data. Each year the manufacturer must update the historical d.f. data by testing production durability-data vehicles. Thus, EPA will determine minimum d.f.'s for each engine family group by using past prototype durability-data vehicle d.f.'s, and d.f.'s from production durability-data vehicles tested each year.

EPA believes these changes in the method of determining d.f.'s can potentially reduce regulatory costs to manufacturers and improve the efficient use of EPA resources. This rulemaking does not affect the stringency of the emission standards, but the pilot program allows increased administrative flexibility in the certification program. As part of the pilot program evaluation, EPA will consider comments, data, information, and suggestions when reevaluating the costs and benefits of this alternative program.

Applicability

The optional provisions of this regulation apply to 1981 through 1984 model year light-duty vehicles and light-duty trucks.

Certification Cost Reductions

EPA is conducting assessments of alternatives to the current methods of certification. A purpose of this review of certification procedures is to further reduce the costs of regulations without compromising the stringency of the standards. This alternative program is a step in the streamlining of the certification program.

The primary purpose of this pilot program is to assess the possible certification cost reductions from this durability-data vehicle (DDV) testing alternative. EPA does not expect significant cost savings from the pilot program itself since EPA will limit the number of eligible engine families and since manufacturers will not likely commit large portions of their product lines to the voluntary program. However, the 1981 through 1984 model year period of this pilot program will provide information for consideration and possible development of a mandatory program that could result in significant cost savings.

The alternative method EPA will use to determine the minimum d.f.'s will replace much of the testing of prototype DDV's with production DDV testing. One benefit of this change is the reduction in the cost associated with the building of prototype vehicles. The testing of a production vehicle in lieu of a prototype could save an estimated 20 percent per DDV due to the difference in vehicle costs.

Moreover, this alternative concept could produce even greater cost savings by aggregating engine families into engine family groups. Under the current certification regulations, manufacturers are required to run prototype DDV's for each new engine-system combination. Some manufacturers have chosen to submit for certification many more system combinations than they intend to produce. While the reasons for doing this vary, they include a perceived need by the manufacturer to minimize the risk of not certifying (or of certifying with too high a d.f.) through running of additional vehicle designs. This risk is presumably due to both the uncertainty in predicting the exact durability performance of prototype vehicles and the determination of a d.f. based upon data obtained from a single test vehicle.

The voluntary pilot program eliminates the need for engine family proliferation by aggregating engine families into engine family groups and determining a single d.f. for the group by using data obtained from several test vehicles. Since manufacturers need not rely on a single durability-data vehicle to certify an engine family, the need for "backup" engine families should be eliminated.

If manufacturers ran only one DDV per engine family actually produced each year, the combined savings from fewer tests and the use of production vehicles could provide a significant reduction over present durability demonstration costs. Since the durability demonstration is the most costly aspect of the certification program, the reforms evaluated by the pilot program could result in a significant savings to manufacturers in a mandatory program.

Background

Section 203(a)(1) of the Clean Air Act prohibits the sale or import of any new motor vehicle unless the vehicle is covered by a certificate of conformity issued under regulations prescribed under Title II of the Act. Section 206(a)(1) of the Act directs the EPA Administrator each year to test or "require to be tested in such manner as he deems appropriate" any new vehicle submitted by the manufacturer to determine if the vehicle conforms with the regulations prescribed under section 202 of the Act.

Under the current certification program (40 CFR Part 86), each manufacturer must submit a detailed description of his anticipated production fleet to EPA. The proposed production fleet is classified into engine families. Vehicles in an engine family have similar or identical engine configurations and other parameters established by EPA.

To determine whether vehilces in a particular engine family will be capable of meeting the exhaust emission standards over their useful lives and thus be certified, a two-phase testing procedure is employed in the current program. The first phase (durability-data vehicle testing) determines the durability of each engine family and emission control system combination (hereafter termed "engine-system combination"). This durability is quantified by measuring the change in emission levels over the 50,000 miles of useful life of a test vehicle and is reflected in the d.f.'s which are determined from the test data. The d.f.'s are determined from test data generated exclusively from test vehilce configurations which are unique to the engine-system combination for which certification is sought. The test vehicle selected to represent the engine-system combination is called a durability-data vehicle (DDV) and is a prototype of vehicles intended to be produced. The prototype DDV is representative of intended production vehicles in its basic design and function but is not required to include final production calibration of individual components (such as the carburetor or distributor). A separate d.f. is established for each exhaust pollutant for each engine-system combination, and is applied to emission-data vehicles as described below.

The second phase of testing (emission-data vehicle testing) estimates the emission levels that production vehicles will likely produce by using the intended production calibrations. Prototype test vehicles called emission-data vehicles (EDV's) are selected to represent several or all of the intended production calibrations within each engine-system combination. The EDV's are tested after accumulating 4,000 miles. For each pollutant, the engine-system combination) d.f. is multiplied by the EDV (of the same engine-system combination) 4,000-mile test result to determine the projected 50,000-mile emission levels. Certification for the engine family can only be granted if the projected emission levels at 50,000 miles for all EDV's within the engine family are within the emission standards for all pollutants.

The alternative program is described below and affects only the durability element of this two-phase testing process. It well enable manufacturers to determine d.f.'s from data obtained from production vehicles including those from other engine families. To further enhance the d.f. data base, the calculation will include data from up to 3 previous model years. These modifications to the current certification procedure are further discussed below.

Alternative Durability Program Description

While specific details of the manufacturer's participation will be developed on an individual basis, each agreement between EPA and participating manufacturers will have the following characteristics:

1. The duration of the pilot program will be for a maximum of 4 model years, beginning with the 1981 model year certification program.

2. Participation is voluntary on the part of the manufacturer. All or portions of a manufacturer's product line may be included in this program subject to negotiation between EPA and the manufacturer.

3. The manufacturer must establish appropriate d.f.'s for each engine family either by using the manufacturer's own methods or by accepting the method used to establish the minimum d.f.'s. The manufacturer must attest to the validity of all d.f.'s used for certification under the Alternative Durability Program. EPA will automatically accept for certification d.f.'s that the manufacturer attests are valid, *and* are equal to or greater than the minimum d.f.'s that EPA determined.

4. The manufacturer must provide the minimum data required to determine the minimum d.f.'s, in any case. These data include those from production durability-data vehicles.

EPA will determine the minimum d.f.'s by the following method:

1. The current engine family structure will be retained, but engine families with similar physical and emission control characteristics will be combined into engine family groups. The basic parameters for this grouping are: Manufacture; Light-duty vehicle or light-duty truck; Block configuration; Displacement; Combustion cycle (i.e., Otto or diesel); Catalyst type and usage (i.e., none, oxidation only, or three-way equipped); Others as may be deemed appropriate by the EPA Administrator.

2. Engine family groups will be assigned d.f.'s which are determined using a multiple step method. First, for each engine family within the engine family group, individual d.f.'s are determined by using historical data from previous model years, up to a maximum of 3 years. The d.f. for a particular engine family for a specified previous model year is determined by straight averaging of d.f.'s from each DDV within the engine family. Second, the engine family d.f.'s are sales weighted and averaged to obtain the engine family group d.f.'s for each of the 3 previous model years. Third, the individual engine family group d.f.'s are weighted and averaged in such a manner as to weight the most recent model year's data more heavily. For the three previous model years, EPA is considering weighing the d.f.'s in a ratio of 4:2:1, beginning with the most recent model year.

Where the above general case does not fit a particular situation (e.g., unavailability of data from all the three prior model years), EPA will adjust the method used to determine the engine family group d.f.'s including the weighting factors. However, the adjusted procedure will apply to any other manufacturer in a similar situation. It should be further noted that to improve the method of determining d.f.'s, EPA may revise the method in future model years. The revised method will be applicable to all manufacturers participating in the pilot program.

3. For the first year of participation in the program, a d.f. for each engine family group will be determined using durability data from prototype DDV's only. Shortly after production begins, production vehicles will be durability tested. The d.f. generated by the production vehicles will not retroactively replace the d.f. initially used for certification of that year's production. Instead, this production vehicle d.f. will be averaged with data from prototype DDV's from previous model years to create an updated engine family group d.f. for the second year of the program.

4. The testing procedures (driving schedule, Federal Test Procedure, maintenance, etc.) for production DDV's will be identical in most respects to the

protocol used for prototype vehicles in the existing certification program. Manufacturers may request reductions in the mileage accumulation requirements for some of the production vehicle durability tests. EPA may approve a reduction in the 50,000-mile test requirements after receiving a written request accompanied by justifying information (e.g., the vehicle has experienced a catastrophic failure which would yield subsequent data unrepresentative, or the vehicle being tested is producing data identical to those generated by a vehicle which has already completed testing). The selection and testing of EDV's for each engine family will not be affected by this pilot program.

5. As described in § 86.081–28 of these regulations, d.f.'s from each DDV are established from the best fit straight line through the data points from the 50,000 miles of testing. In the current program, these data are not acceptable if the best fit straight line exceeds the emission standard at any point, unless all measured test points are below the standard. This occurrence has been unofficially termed "line crossing." As with the current program, data from any *prototype* DDV will not be acceptable in the alternative program if line crossing occurs. For *production* DDV's, line crossing will be allowed for the purpose of determining a d.f. only if the 4,000-mile test results multiplied by the engine family group d.f. (established from historical data) does not exceed the standards. Under these regulations, a 4,000-mile test will be substituted for the 5,000-mile DDV test required for prototype DDV's. If, after the 4,000-mile test of the production DDV, the projected 50,000-mile results exceed the standard for one or more pollutants, the manufacturer may withdraw the vehicle (in which case a new DDV will be selected and tested) or proceed with mileage accumulation. However, should the manufacturer proceed with mileage accumulation, the data will be acceptable only if line crossing does not occur.

6. In some cases EPA will require a new prototype DDV for the current model year when, in EPA's judgment, the available historical certification data are insufficient to predict durability performance of a particular engine-system combination (e.g., introduction of a variable venturi carburetor). In this case, EPA will determine a set of d.f.'s unique to this particular engine configuration using the new prototype DDV data and the historical data from the rest of the engine family group. A different set of d.f.'s (not including the new-prototype DDV data) will be used to certify all other families within the engine family group. The assigned d.f. used for certification of this new engine-system combination will be based on the sales weighted average of this prototype vehicle d.f. and the other historical engine family data within the engine family group. However, the d.f. from this prototype vehicle will not affect the assigned d.f.'s used for certification of the other families within the engine family group.

7. The specific production vehicles to be tested in this pilot program will be selected by EPA. EPA may select production DDV's from any vehicle design certified by the manufacturer within the engine family group. EPA may select up to three production DDV's per engine family group.

8. Manufacturers may test as many additional production DDV's as they wish. These vehicle designs will be selected by the manufacturer but specific vehicles must be randomly selected as are the EPA-selected vehicles. Included in the calculation of the average d.f. for the engine family group will be the d.f.'s from these additional vehicles.

Stringency

EPA believes that this Alternative Durability Program does not alter the stringency of the certification requirements. The use of historical durability data from as many as 3 model years should increase the reliability of d.f., predictions since the d.f.'s used for certification will be based on a larger sample size. At the same time, more recent data in the sample will be counted more heavily since these data should more accurately predict the d.f. (This also creates incentives to improve vehicle durability from year to year.) The aggregation of engine families into engine family groups is necessary in the use of an historical average since design changes create new engine families and emission control systems each year. The engine-system combinations grouped in this manner are technically similar enough that their exhaust emission d.f.'s could be expected to be significantly similar. EPA believes that due to the technical similarity in designs, the individual d.f.'s for each engine-system combination within the engine family group can be adequately represented by the average engine family group d.f.'s. While not analytically validated, EPA believes that the increased size of the sample used to calculate an average d.f. may increase the reliability of the d.f.'s used to achieve certification. (The use of an average d.f. in no way conflicts with EPA's position that every vehicle in use should comply with the emission standards. The purpose of averaging d.f.'s within engine family groups is to increase the data base and, hopefully, the statistical confidence in the d.f.'s that are ultimately used for certification. However, regardless of the d.f.'s that EPA uses to project a vehicle's emissions at 50,000 miles, every vehicle must be capable of meeting the standards in actual use when properly maintained.)

The use of production DDV's is similarly anticipated to increase the reliability of the d.f. prediction, but not result in a change in certification stringency. Under the current program, it is necessary for manufacturers to build prototype DDV's which are representative of their proposed production fleet. As much as practical, actual production hardware has been used, and, where use of prototype components has been necessary, manufacturers and EPA have taken care to simulate as much as possible proposed production designs and manufacturing methods. EPA has not data indicating that the d.f.'s generated from production vehicles differ from d.f.'s generated by prototype vehicles where the vehicles are evaluated according to certification durability program procedures. (One of the purposes of this pilot program is to verify that production vehicles do not get significantly different d.f.'s than historically seen on prototype vehicles.) EPA expects that production vehicles will usually generate d.f.'s significantly the same as would be seen if prototype vehicles were run. No change in stringency is expected due to the use of production rather than prototype DDV's If a manufacturer perceives such a change, the manufacturer may withdraw engine family groups from the alternative durability program. However, if the manufacturer still wishes to certify the engine families within the engine family groups withdrawn, it must meet the mandatory requirements of this subpart.

Need for Immediate Implementation

The Agency finds that good cause exists for omitting as unnecessary a notice of proposed rulemaking, public comment, and postponement of the effective date for issuance of these amendments, in that (1) the program is voluntary on the part of the regulated industry and (2) no adverse economic or environmental impacts are anticipated. In addition, immediate implementation of the pilot program is necessary if it is to be utilized on a limited basis for certification for the 1981 model year. This will give manufacturers an

opportunity to derive some cost savings at the earliest possible time and will permit EPA to begin early evaluation of this program to determine whether permanent changes to the certification requirements are appropriate.

Comments and the Public Docket

Interested parties are invited to comment during the course of the pilot program to help the Agency evaluate the impacts of the program. Please submit written comments to: U.S. Environmental Protection Agency, Central Docket Section, Attn: A-80-24, Waterside Mall, Room 2902, 401 M Street S.W., Washington, D.C. 20460. The docket may be inspected between the hours of 8:00 a.m. and 4:00 p.m. Monday through Friday. A reasonable charged fee may be charge for copying service.

Regulatory Analysis

The Environmental Protection Agency has determined that this is not a significant regulation and therefore does not require a Regulatory Analysis under Executive Order 12044.

Dated: June 24, 1980.

Douglas M. Costle,

Administrator, U.S. Environmental Protection Agency.

In consideration of the foregoing, Part 86 in Title 40 of the Code of Federal Regulations is revised as follows:

1. The table of contents for Subpart A of Part 86 is amended by adding the following sections in numerical order:

Subpart A—General Provisions for Emission Regulations for 1977 and Later Model Year New Light-Duty Vehicles, 1977 and Later Model Year New Light-Duty Trucks, and for 1977 and Later Model Year New Heavy-Duty Engines.

* * * * *

Sec.
86.081-13 Alternative Durability Program.
86.081-24 Test vehicles and engines.
86.081-26 Mileage and service accumulation; emission measurements.

* * * * *

2. Section 86.081-1 is amended by adding paragraph (d).

§ 86.081-1 General applicability.

* * * * *

(d) *Alternative Durability Program.* For 1981 through 1984 model year light-duty vehicles and light-duty trucks, a manufacturer may elect to participate in the Alternative Durability Program. This optional program provides an alternative method of determining exhaust emission control system durability. The general procedures and a description of the program are contained in § 86.081-13 and specific provisions on test vehicles and compliance procedures are contained in § 86.081-24 and § 86.081-28 respectively.

* * * * *

3. A new § 86.081-2 is added.

§ 86.081-2 Definitions.

The following definition applies beginning with the 1981 model year. The definitions in § 86.079-2 remain effective for this section.

"Engine Family Group" means a combination of engine families for the purpose of determining a minimum deterioration factor under the Alternative Durability Program.

4. A new § 86.081-13 is added.

§ 86.081-13 Alternative Durability Program.

(a) The procedures of the Alternative Durability Program are optional. Manufacturers may use these optional procedures to determine deterioration factors instead of using the procedures that this subpart otherwise requires.

(b) The optional procedures of the Alternative Durability Program apply only to light-duty vehicles and light-duty trucks, and are effective only for the 1981 through 1984 model years. All manufacturers of these vehicles are eligible to participate in this program.

(c) For engine families subject to the procedures of the Alternative Durability Program, the manufacturer shall submit deterioration factors to the Administrator for approval to use them for certification. The Administrator shall approve the use of deterioration factors that:

(1) The manufacturer attests are representative of the durability performance of its vehicles in actual field use when maintained according to the manufacturer's maintenance instructions (as limited under § 86.079-25(a)), and

(2) Are equal to or greater than the deterioration factors that EPA determines under paragraph (d) of this section.

(d) EPA shall determine minimum deterioration factors for engine families subject to the Alternative Durability Program. This determination shall be based on a procedure of grouping engine families (see § 86.081-24(a)) in order to use historical certification data to determine deterioration factors for each engine family group. The historical data shall be updated yearly through the testing of production durability-data vehicles. Test vehicle requirements under these procedures are contained in § 86.081-24(c)(1)(iii) and compliance requirements are contained in § 86.081-28(a)(5).

(e) *Request procedures.* (1) A manufacturer wishing to participate in the Alternative Durability Program must submit to the Administrator a written request describing the engine families that the manufacturer elects to be included in the program.

(2) The Administrator may declare ineligible any engine family for which the Administrator determines there is unreasonable risk in determining a deterioration factor using the methods of the Alternative Durability Program. Furthermore, the Administrator may limit the number of engine families within the manufacturer's product line that are eligible for the Alternative Durability Program.

(3) Upon approval of the manufacturer's request to participate, the Administrator and the manufacturer may enter into a written agreement prescribing the terms and conditions of the program. This agreement shall be equitable with agreements entered in with all other manufacturers. The agreement shall specify the following:

(i) The engine families to be included in the program and the engine family groups that have been established by the provisions of § 86.081-24(a) (8) and (9).

(ii) The procedures for the selection of production durability-data vehicles specified under the provisions of § 86.081-24(h).

(iii) The procedures for the determination of minimum exhaust emission deterioration factors for each engine family group.

(f) A manufacturer may elect, at any time, to discontinue participation in this program for all or part of the product line. However, only entire engine family groups may be discontinued. If the manufacturer still wishes to certify any vehicles from a discontinued engine family group, the mandatory requirements of this subpart must be met.

5. A new § 86.081-24 is added. This section is identical to § 86.080-24 except paragraphs (a)(8), (a)(9), (a)(10), and (h) are added, and paragraph (g) is revised.

§ 86.081-24 Test vehicles and engines.

(a)(1) The vehicles or engines covered by an application for certification will be divided into groupings of engines which are expected to have similar emission characteristics throughout their useful life. Each group of engines with similar emission characteristics shall be defined as a separate engine family.

(2) To be classed in the same engine family, engines must be identical in all the following respects:

(i) The cylinder bore center-to-center dimensions.

(ii) The dimension from the centerline of the crankshaft to the centerline of the camshaft.

(iii) The dimension from the centerline of the crankshaft to the top of the cylinder block head face.

(iv) The cylinder block configuration (air-cooled or water-cooled; L-6, 90° V-8, etc.).

(v) The location of intake and exhaust valves (or ports) and the valve (or port) sizes (within a ⅛-inch range on the valve head diameter or within 10 percent on the port area).

(vi) The method of air aspiration.

(vii) The combustion cycle.

(viii) Catalytic converter characteristics.

(ix) Thermal reactor characteristics.

(x) Type of air intercooler (e.g., intercoolers and aftercoolers) for diesel heavy-duty engines.

(3) Engines identical in all the respects listed in paragraph (a)(2) of this section may be further divided into different engine families if the Administrator determines that they may be expected to have different emission characteristics. This determination will be based upon a consideration of the following features of each engine:

(i) The bore and stroke.

(ii) The surface-to-volume ratio of the nominally dimensioned cylinder at the top dead center position.

(iii) The intake manifold port size and configuration.

(iv) The exhaust manifold port size and configuration.

(v) The intake and exhaust valve sizes.

(vi) The fuel system.

(vii) The camshaft timing and ignition or injection timing characteristics.

(4) Where engines are of a type which cannot be divided into engine families based upon the criteria listed in paragraphs (a)(2) and (a)(3) of this section, the Administrator will establish families for those engines based upon the features most related to their emission characteristics.

(5) The gasoline-fueled vehicles covered by an application for certification will be divided into groupings which are expected to have similar evaporative emission characteristics throughout their useful life. Each group of vehicles with similar evaporative emission characteristics shall be defined as a separate evaporative emission family.

(6) To be classed in the same evaporative emission family, vehicles must be similar with respect to:

(i) Type of vapor storage device (e.g., canister, air cleaner, crankcase).

(ii) Basic canister design.

(iii) Fuel system.

(7) Where vehicles are of a type which cannot be divided into evaporative emission families based on the criteria listed above, the Administrator will establish families for those vehicles based upon the features most related to their evaporative emission characteristics.

(8) If the manufacturer elects to participate in the Alternative Durability Program, the engine families covered by an application for certification shall be grouped together based upon similar engine design and emission control system characteristics. Each of these groups shall constitute a separate engine family group.

(9) To be classed in the same engine family group, engine families must contain engines identical in all of the following respects:

(i) The combustion cycle.

(ii) The cylinder block configuration (air-cooled or water-cooled; L-6, V-8, rotary, etc.).

(iii) Displacement (engines of different displacement within 50 cubic inches or 15 percent of the largest displacement and contained within a multidisplacement engine family will be included in the same engine family group).

(iv) Catalytic converter usage and basic type (noncatalyst, oxidation catalyst only, three-way catalyst equipped).

(10) Engine families identical in all respects listed in paragraph (a)(9) of this section may be further divided into different engine family groups if the Administrator determines that they are expected to have significantly different exhaust emission control system deterioration characteristics.

(b) *Emission data.* (1) *Emission-data vehicles.* Paragraph (b)(1) of this section applies to light-duty vehicles and light-duty truck emission-data vehicles.

(i) Vehicles will be chosen to be operated and tested for emission data based upon the engine family groupings. Within each engine family, the requirements of this paragraph must be met.

(ii) Vehicles for each engine family will be divided into engine displacement-exhaust emission control system combinations as applicable. A projected sales volume will be established for each combination for the model year for which certification is sought. One vehicle of each combination will be selected in order of decreasing projected sales volume until 70 percent of the projected sales of a manufacturer's total production of vehicles of that engine family is represented, or until a maximum of 4 vehicles is selected. If any single combination represents over 70 percent, then 2 vehicles of that combination will be specified by the Administrator as to such features as engine code, transmission type, fuel system, and inertia weight class.

(iii) The Administrator may select a maximum of four additional vehicles within each engine family based upon features indicating that they may have the highest emission levels of the vehicles in that engine family. In selecting these vehicles, the Administrator will consider such features as the emission control system combination, induction system characteristics, ignition system characteristics, fuel system, rated horsepower, rated torque, compression ratio, inertia weight class, transmission options, and axle ratio.

(iv) If the vehicles selected in accordance with paragraphs (b)(1) (ii) and (iii) of this section do not represent each engine-system combination, then one vehicle of each engine-system combination not represented will be selected by the Administrator. The vehicle selected shall be of the engine displacement with the largest projected sales volume of vehicles with the control system combination in the family and will be designated by the Administrator as to such features as engine code, transmission type, fuel system, and inertia weight class.

(v) Within an engine family, the Administrator may select one additional vehicle for each engine-system combination with which a manufacturer chooses to demonstrate compliance with applicable emission standards at high altitude.

(vi) The Administrator may combine testing requirements for any vehicle selected under paragraph (b)(1)(v) or (b)(1)(vii)(D) of this section with the testing requirements for any similar vehicle in the same engine-system combination selected under paragraph (b)(1) (ii), (iii), or (iv) of this section or any similar vehicle in the same engine-system, evaporative emission family, evaporative emission control system combination selected under paragraph (b)(1)(vii) (A) or (B) of this section. The testing requirements may be combined by the Administrator by requiring a vehicle selected for testing under paragraphs (b)(1) (ii), (iii), (iv), (vii)(A), or (vii)(B) of this section to be modified (if necessary) after mileage accumulation and emission testing for the purpose of demonstrating compliance with § 86.079-23(c)(1)(ii).

(vii)(A) Vehicles of each evaporative emission family with be divided into evaporative emission control systems. One vehicle of each evaporative

emission control system within the evaporative emission family will be selected.

(B) The Administrator may select a maximum of four additional vehicles within each evaporative emission family based upon features indicating that they may have the highest evaporative emission levels of vehicles in that family.

(C) The Administrator may determine that the vehicles selected under paragraphs (b)(1) (ii) through (iv) of this section may be used to satisfy the requirements of paragraphs (b)(1)(vii) (A) and (B) of this section.

(D) The Administrator may also select one additional vehicle for each evaporative emission control system within each evaporative family for those vehicles with which the manufacturer chooses to demonstrate compliance with applicable emission standards at high altitude.

(E) Vehicles selected under paragraph (b)(1)(v) of this section may be used to satisfy the requirements of paragraph (b)(1)(vii)(D) of this section.

(2) *Gasoline-fueled heavy-duty emission-data engines.* Paragraph (b)(2) of this section applies to gasoline-fueled heavy-duty engines.

(i) Engines will be chosen to be run for emission data based upon engine family groupings. Within each engine family, the requirements of this paragraph must be met.

(ii) Engines of each engine family will be divided into engine displacement-exhaust emission control system combinations. A projected sales volume will be established for each combination for the applicable model year. One engine of each combination will be selected in order of decreasing projected sales volume until 70 percent of the projected sales of a manufacturer's total production of engines of that family is represented, or until a maximum of 4 engines is selected. The engines selected for each combination will be specified by the Administrator as to fuel system.

(iii) The Administrator may select a maximum of two additional engines within each engine family based upon features indicating that they may have the highest emission levels of the engines in that engine family. In selecting these engines, the Administrator will consider such features as the exhaust emission control system, induction system characteristics, ignition system characteristics, fuel system, rated horsepower, rated torque, and compression ratio.

(iv) If the engine selected in accordance with paragraphs (b)(2) (ii) and (iii) of this section do not represent each engine displacement-exhaust emission control system combination, then one engine of each engine displacement-exhaust emission control system combination not represented shall be selected by the Administrator.

(3) *Diesel heavy-duty emission-data engines.* Paragraph (b)(3) of this section applies to diesel heavy-duty emission-data engines.

(i) Engines will be chosen to be run for emission data based upon engine family groupings. Within each engine family, the requirements of this paragraph must be met.

(ii) Engines of each engine family will be divided into groups based upon the exhaust emission control system. One engine of each engine-system combination shall be run for smoke emission data and gaseous emission data as prescribed in § 86.084–26(c)(3). Either the complete gaseous emission test or the complete smoke test may be conducted first. Within each combination, the engine that features the highest fuel feed per stroke, primarily at the speed of maximum rated torque and secondarily at rated speed, will usually be selected. If there are military engines with higher fuel rates than other engines in the same engine-system combination, then one military engine shall also be selected. The engine with the highest fuel feed per stroke will usually be selected.

(iii) The Administrator may select a maximum of one additional engine within each engine-system combination based upon features indicating that it may have the highest emission levels of the engines of that combination. In selecting this engine, the Administrator will consider such features as the injection system, fuel system, compression ratio, rated speed, rated horsepower, peak torque speed, and peak torque.

(c) *Durability data.* (1) *Durability-data vehicles.* Paragraph (c)(1) of this section applies to light-duty vehicle and light-duty truck durability-data vehicles except for the production durability-data vehicles selected for the Alternative Durability Program according to paragraph (h)(1) of this section.

(i) A durability-data vehicle will be selected by the Administrator to represent each engine-system combination. The vehicle selected shall be of the engine displacement with the largest projected sales volume of vehicles with the control-system combination on that engine family and will be designated by the Administrator as to transmission type, fuel system, inertia weight class, and test weight.

(ii) A manufacturer may elect to operate and test additional vehicles to represent any engine-system combination. The additional engines must be of the same engine displacement, transmission type, fuel system, and inertia weight class as the vehicle selected for that engine-system combination in accordance with the provisions of paragraph (c)(1)(i) of this section. Notice of an intent to operate and test additional vehicles shall be given to the Administrator not later than 30 days following notification of the test fleet selection.

(2) *Gasoline-fueled heavy-duty durability-data engines.* Paragraph (c)(2) of this section applies to gasoline-fueled heavy-duty durability-data engines.

(i) A durability-data engine will be selected by the Administrator to represent each engine system combination.

(ii) [Reserved]

(iii) A manufacturer may elect to operate and test additional engines to represent any engine-system combination. The additional engines must be of the same engine displacement and fuel system as the engine selected for that combination in accordance with the provisions of paragraph (c)(2)(i) of this section. Notice of an intent to run additional engines shall be given to the Administrator not later than 30 days following notification of the test fleet selection. Deterioration factors calculated for each engine-system combination shall be applied separately to military and nonmilitary engines within the same engine-system combination.

(3) *Diesel heavy-duty durability-data engine.* Paragraph (c)(3) of this section applies to diesel heavy-duty durability-data engines.

(i) One engine from each engine-system combination shall be tested as prescribed in § 86.081–26(c)(3)(ii). At each test point, either the complete gaseous emission test or the complete smoke test may be conducted first. Within each combination, the engine which features the highest fuel feed per stroke, primarily at rated speed and secondarily at the speed of maximum rated torque, will unually be selected for durability testing. In the case where more than one engine in an engine-system combination has the highest fuel feed per stroke, the engine with the highest maximum rated horsepower will usually be selected for durability testing. If an engine-system combination includes both military and nonmilitary engines, then the nonmilitary engine with the highest maximum rated horsepower will usually be selected for durability testing.

(ii) A manufacturer may elect to operate and test additional engines to

represent any engine-system combination. The additional engines must be of the same model and fuel system as the engines selected in accordance with the provisions of paragraph (c)(3)(i) of this section. Notice of an intent to test additional engines shall be given to the Administrator not later than 30 days following notification of the test fleet selection. Deterioration factors calculated for each engine-system combination shall be applied separately to military and nonmilitary engines within the same engine-system combination.

(d) For purposes of testing under § 86.081–26(a)(9) or (b)(11), the Administrator may require additional emission-data vehicles (or emission-data engines) and durability-data vehicles (or durability-data engines) identical in all material respects to vehicles (or engines) selected in accordance with paragraphs (b) and (c) of this section: *Provided*, that the number of vehicles selected shall not increase the size of either the emission-data fleet or the durability-data fleet by more than 20 percent or one vehicle, whichever is greater.

(e) Any manufacturer whose projected sales for the model year in which certification is sought is less than

(1) 2,000 gasoline-fueled light-duty vehicles,

(2) 2,000 diesel light-duty vehicles,

(3) 2,000 gasoline-fueled light-duty trucks,

(4) 2,000 diesel light-duty trucks,

(5) 2,000 gasoline-fueled heavy-duty engines, or

(6) 2,000 diesel heavy-duty engines,

may request a reduction in the number of test vehicles (or engines) determined in accordance with the foregoing provisions of this section. The Administrator may agree to such lesser number as he determines would meet the objectives of this procedure.

(f) In lieu of testing an emission-data or durability-data vehicle (or engine) selected under paragraph (b) or (c) of this section, submitting data therefor, a manufacturer may, with the prior written approval of the Administrator, submit exhaust emission data and/or fuel evaporative emission data, as applicable on a similar vehicle (or engine) for which certification has previously been obtained or for which all applicable data required under § 86.078–23 have previously been submitted.

(g)(1) This paragraph applies to light-duty vehicles and light-duty trucks, but does not apply to the production vehicles selected under paragraph (h) of this section.

(2) Where it is expected that more than 33 percent of the vehicles in an engine family will be equipped with an optional item, the full estimate weight of that item shall be included, if required by the Administrator, in the curb weight computation for each vehicle available with that option in the engine family. Where it is expected that 33 percent or less of the vehicles in an engine family will be equipped with an item of optional equipment, no weight for that item will be added in computing curb weight. In the case of mutually exclusive options, only the weight of the heavier option will be added in computing curb weight. Optional equipment weighing less than 3 pounds per item need not be considered.

(3) Where it is expected that more than 33 percent of the vehicles in an engine family will be equipped with an item of optional equipment that can reasonably be expected to influence emissions, then such items of optional equipment shall actually be installed, unless specifically excluded by the Administrator, on all emission-data and durability-data vehicles in the engine family on which the option is intended to be offered in production. Optional equipment that can reasonably be expected to influence emissions are air-conditioner, power steering, power brakes, and other items determined by the Administrator.

(4) Optional equipment that can reasonably be expected to influence emissions which is utilized on 33 percent or less of the vehicles in the engine family shall not be installed on any vehicles in that engine family unless specifically required under this section.

(h) *Alternative Durability Program durability-data vehicles.* Paragraph (h) of this section applies to light-duty vehicle and light-duty truck durability-data vehicles selected under the Alternative Durability Program. The Alternative Durability Program is described in § 86.081–13.

(1) In order to update the durability data to be used to determine a deterioration factor for each engine family group, the Administrator will select durability-data vehicles from the manufacturer's production line. Production vehicles will be selected from the 1981, 1982, and 1983 model year production of vehicles.

(i) The Administrator shall select the production durability-data vehicle designs from the designs that the manufacturer offers for sale. For each model year and for each engine family group, the Administrator may select production durability-data vehicle designs of equal number to the number of engine families within the engine family group, up to a maximum of three vehicles.

(ii) The production durability-data vehicles representing the designs selected in paragraph (h)(1)(i) of this section will be randomly selected from the manufacturer's production. The Administrator will make these random selections unless the manufacturer (with prior approval of the Administrator) elects to make the random selections.

(iii) The manufacturer may select additional production durability-data vehicle designs from within the engine family group. The production durability-data vehicles representing these designs shall be randomly selected from the manufacturer's production in accordance with paragraph (h)(1)(ii) of this section.

(iv) For each production durability-data vehicle selected under paragraph (h)(1) of this section, the manufacturer shall provide to the Administrator (before the vehicle is tested or begins service accumulation) the vehicle identification number. Before the vehicle begins service accumulation the manufacturer shall also provide the Administrator with a description of the durability-data vehicle as specified by the Administrator.

(2) If, within an existing engine family group, a manufacturer requests to certify vehicles of a new design, engine family, emission control system, or with any other durability-related design difference, the Administrator will determine if the existing engine family group deterioration factor is appropriate for the new design. If the Administrator cannot make this determination or deems the deterioration factor not appropriate, the Administrator shall select preproduction durability-data vehicles under the provisions of paragraph (c) of this section. If vehicles are then certified using the new design, the Administrator may select production vehicles with the new design under the provisions of paragraph (h)(1) of this section.

(3) If a manufacturer requests to certify vehicles of a new design that the Administrator determines are a new engine family group, the Administrator shall select preproduction durability-data vehicles under the provisions of paragraph (c) of this section. If vehicles are then certified using the new design, the Administrator may select production vehicles of that design under the provisions of paragraph (h)((1) of this section.

6. A new § 86.081–26 is added. This section is identical to § 86.080–26 except that paragraph (a)(4)(iii) is added and paragraphs (a)(4)(i) and (ii) are revised.

§ 86.081-26 Mileage and service accumulation; emission measurements.

(a)(1) Paragraph (a) of this section applies to light-duty vehicles and light-duty trucks.

(2) The procedure for mileage accumulation will be the Durability Driving Schedule as specified in Appendix IV to this part. A modified procedure may also be used if approved in advance by the Administrator. Except with the advance approval of the Administrator, all vehicles will accumulate mileage at a measured curb weight which is within 100 pounds of the estimated curb weight. If the loaded vehicle weight is within 100 pounds of being included in the next higher inertia weight class as specified in § 86.129, the manufacturer may elect to conduct the respective emission tests at the test weight corresponding to the higher loaded vehicle weight.

(3) *Emission-data vehicles.* Unless as otherwise provided for in § 86.079-23(a), emission-data vehicles shall be operated and tested as follows:

(i) *Gasoline-fueled.* (A) Each gasoline-fueled emission-data vehicle shall be driven 4,000 miles with all emission control systems installed and operating. Complete exhaust emission tests shall be conducted at zero miles and 4,000 miles on those vehicles selected under § 86.081-24(b)(1)(ii) through (b)(1)(v). Complete exhaust and evaporative emission tests shall be conducted at zero miles and 4,000 miles on those vehicles selected under § 86.081-24(b)(1)(vii). The manufacturer may, at his option, test the vehicles selected under § 86.081-24(b)(1)(vii) up to three times at the 4,000-mile test point as long as the ± 250-mile test tolerance is adhered to. The Administrator may determine under § 86.081-24(f) that no testing is required.

(B) The emission-data vehicle(s) selected for testing under § 86.081-24(b)(1)(v) or (b)(1)(vii)(D) shall be driven 6, 436 Kilometers (4,000 miles) at any altitude. Emission tests shall be conducted at zero kilometers (zero miles) at any altitude and 6,36 Kilometers (4,000 miles) under high-altitude conditions.

(C) The emission-data vehicle(s) selected for testing under § 86.081-24(b)(1)(v) and permitted to be tested for purposes of § 86.079-23(b)(1)(ii) under the provision of § 86.081-24(b)(1)(vi) shall be driven 6,436 kilometers (4,000 miles) at low altitude. Emission tests shall be conducted at zero kilometers (zero miles) at low altitude and 6,436 kilometers (4,000 miles) under both low- and high-altitude conditions. For the purpose of this subparagraph, "low altitude" means any elevation less than 549 meters (1,800 feet).

(ii) *Diesel.* (A) Each diesel emission-data vehicle shall be driven 6,436 kilometers (4,000 miles) with all emission control systems installed and operating. Emission tests shall be conducted at zero kilometers (zero miles) and 6,436 kilometers (4,000 miles).

(B) The emission-data vehicle(s) selected for testing under § 86.081-24(b)(1)(v) shall be driven 6,436 kilometers (4,000 miles) at any altitude. Emission tests shall be conducted at zero kilometers (zero miles) at any altitude and 6,436 kilometers (4,000 miles) under high-altitude conditions.

(C) The emission-data vehicle(s) selected for testing under § 86.081-24(b)(1)(v) and permitted to be tested for purposes of § 86.079-23(b)(1)(ii) under the provisions of § 86.081-24(b)(1)(vi) shall be driven 6,436 kilometers (4,000 miles) at low altitude. Emission tests shall be conducted at zero kilometers (zero miles) at low altitude and 6,436 kilometers (4,000 miles) under both low- and high-altitude conditions. For the purpose of this subparagraph, "low altitude" means any elevation less than 549 meters (1,800 feet).

(4) Durability-data vehicles. Unless as otherwise provided for in § 86.079-23(a), durability-data vehicles shall be operated and tested as follows:

(i) *Gasoline-fueled.* Each gasoline-fueled durability-data vehicle selected by the Administrator or elected by the manufacturer under § 86.081-24(c)(1) shall be driven, with all emission control systems installed and operating, for 50,000 miles or such lesser distance as the Administrator may agree to as meeting the objective of this procedure. Complete exhaust emission tests shall be made on all durability-data vehicles selected by the Administrator or elected by the manufacturer under § 86.081-24(c) at the following mileage points except as specified by paragraph (a)(4)(iii) of this section: 0; 5,000; 10,000; 15,000; 20,000; 25,000; 30,000; 35,000; 40,000; 45,000 50,000. The Administrator may determine under § 86.081-24(f) that no testing is required.

(ii) *Diesel.* Each diesel durability-data vehicle shall be driven, with all emission control systems installed and operating, for 50,000 miles or such lesser distance as the Administrator may agree to as meeting the objectives of the procedure. Complete emission tests (see § 86.106 through 86.145) shall be made at the following milege points except as specified by paragraph (a)(4)(iii) of this section: 0; 5,000; 10,000; 15,000; 20,000; 25,000; 30,000; 35,000; 40,000; 45,000; 50,000.

(iii) Production durability-data vehicles selected under § 86.081-24(h)(1) shall be driven and tested in accordance with paragraphs (a)(4)(i) and (a)(4)(ii) of this section with the exception that the emission test specified for the 5,000-mile point shall be conducted at the 4,000-mile point.

(5) All tests required by this subpart for durability-data vehicles and for emission-data vehicles must be conducted at any accumulated mileage within 250 miles of each of those test points.

(6)(i) The results of each emission test shall be supplied to the Administrator immediately after the test. The manufacturer shall furnish to the Administrator explanations for voiding any test. The Administrator will determine if voiding the test was appropriate based upon the explanation given by the manufacturer for the voided test. If a manufacturer conducts multiple tests at any test point at which the data are intended to be used in the calculation of the deterioration factor, the number of tests must be the same at each point and may not exceed three valid tests. Tests between test points may be conducted as required by the Administrator. Data from all tests (including voided tests) shall be air posted to the Administrator within 24 hours (or delivered within 3 working days). In addition, all tests shall be compiled and provided to the Administrator in accordance with § 86.079-23. Where the Administrator conducts a test on a durability-data vehicle at a prescribed test point, the results of that test will be used in the calculation of the deterioration factor.

(ii) The results of all emission tests shall be rounded, using the "rounding off method" specified in ASTM E 29-67, to the number of places to the right of the decimal point indicated by expressing the applicable emission standards of this subpart to three significant figures.

(7) Whenever the manufacturer proposes to operate and test a vehicle which may be used for emission or durability data, he shall provide the zero-mile test data to the Administrator (except for those vehicles for which the zero-mile test requirement has been waived under § 86.079-23(a)(2)) and make the vehicle available for such testing under § 86.081-29 as the Administrator may require before beginning to accumulate mileage on the vehicle. Failure to comply with this requirement will invalidate all test data submitted for this vehicle.

(8) Once a manufacturer begins to operate an emission-data or durability-data vehicle, as indicated by compliance with paragraph (a)(7) of this section, he

shall continue to run the vehicle to 4,000 miles or 50,000 miles, respectively, and the data from the vehicle will be used in the calculations under § 86.081-28. Discontinuation of a vehicle shall be allowed only with the written consent of the Administrator.

(9)(i) The Administrator may elect to operate and test any test vehicle during all or any part of the mileage accumulation and testing procedure. In such cases, the manufacturer shall provide the vehicle(s) to the Administrator with all information necessary to conduct this testing.

(ii) The test procedures in § 86.106 through 86.145 will be followed by the Administrator. The Administrator will test the vehicles at each test point. Maintenance may be performed by the manufacturer under such conditions as the Administrator may prescribe.

(iii) The data developed by the Administrator for the engine-system combination shall be combined with any applicable data supplied by the manufacturer on other vehicles of that combination to determine the applicable deterioration factors for the combination. In the case of a significant discrepancy between data developed by the Administrator and that submitted by the manufacturer, the Administrator's data shall be used in the determination of deterioration factors.

(10) Emission testing of any type with respect to any certification vehicle other than that specified in this part is not allowed except as such testing may be specifically authorized by the Administrator.

(11) This section does not apply to testing conducted to meet the requirements of § 86.079-23(b)(2).

(b)(1) Paragraph (b) of this section applies to heavy-duty engines.

(2)(i) For gasoline-fueled engines, the dynamometer service accumulation schedule will consist of several operating conditions which give the percent loads and the modes as specified in the following chart. The percentage of time in each mode must be held within the limits specified. The maximum observed torque for each mode in the service accumulation cycle must be determined at the rpm at which the mode is being conducted. The percent load for that mode will be determined from the maximum torque at the rpm at which the mode is being conducted.

Mode	Observed torque (percentage of maximum observed)	Percentage of time
Idle	Idle	23 (22 to 24).
CT	CT	14 (13 to 15).
PTD	10	6 (5 to 7).
Cruise	25	31 (30 to 32).
PTA	55	15 (14 to 16).
FL	90	11 (10 to 12).

(ii) The equivalent control parameter for engine loading will be manifold vacuum, manifold pressure, or torque. Usage of one of the three parameters will require approval in advance by the Administrator. The control parameter values that correspond to the appropriate percent loads as specified in the emission test cycle will be initially determined at the zero-hour point or after an appropriate break-in procedure. The control parameter values determined initially will be used for the entire service accumulation schedule. If at any time during the service accumulation the 90 percent torque value cannot be attained, the engine shall be operated at wide-open throttle.

(iii) The average speed shall be between 1,650 and 1,700 rpm. Subject to the requirements as to average speed, there must be operation at speeds in excess of 3,200 rpm (but not in excess of governed speed for governed engines or rated speed for nongoverned engines) for a cumulative maximum of 0.5 percent of the actual cycle time, excluding time in transient conditions. Maximum cycle time shall be 15 minutes. A cycle approved in advance by the Administrator shall be used.

(3)(i) For diesel engines, the following criteria must be met before service accumulation can begin. Failure to comply with these requirements shall invalidate all test data submitted for an engine.

(A) Each engine shall produce at least 95 percent of the maximum horsepower, corrected to rating conditions, at 95 to 100 percent of the rated speed.

(B) The fuel rate at maximum horsepower shall be within manufacturer's specifications.

(ii) During service accumulation, hours can be credited toward the required service accumulation hours when the following criteria are met. If these criteria cannot be met, engine operation shall be discontinued and the Administrator shall be notified immediately. (Adjustments to the fuel rate can be approved under the provisions of § 86.079-25.)

(A) Each engine shall produce at least 95 percent of the maximum horsepower, at 95 to 100 percent of the rated speed, observed at the zero-hour point. Horsepower values shall be corrected to the rating conditions.

(B) The engine shall be operated at 75 percent of the inlet and exhaust restrictions specified in § 86.079-8 except that the tolerance will be ±3 inches of water and ±0.5 inch of HG respectively.

(C) During each emission test the inlet and exhaust restrictions shall be as specified in § 86.079-8.

(4) If a break-in procedure is used, the procedure must be the same as recommended to the ultimate purchaser. Prior approval by the Administrator is required for use of any break-in procedure. The hours accumulated during the break-in procedure will not be counted as part of the service accumulation.

(5) Emission-data engines: Each emission-data engine shall be operated for 125 hours with all emission control systems installed and operating. An emission test shall be conducted at 125 hours. A zero-hour emission may be performed after the engine has been approved by the Administrator to begin service accumulation. Evaporative emission controls need not be connected provided normal operating conditions are maintained in the engine induction system.

(6) Durability-data engines: Each gasoline-fueled durability-data engine shall be operated, with all emission control systems installed and operating, for 1,500 hours. Each diesel durability-data engine shall be operated for 1,000 hours. Emission measurement, as prescribed, shall be made at 125-hour intervals beginning at 125 hours of operation. A zero-hour emission test may be performed after the engine has been approved by the Administrator to begin service accumulation. Evaporative emission controls need not be connected provided normal operating conditions are maintained in the engine induction system.

(7) All tests required by this subpart to be conducted after 125 hours of operation or at any multiple of 125 hours may be conducted at any accumulated number of hours within 8 hours of 125 hours or the appropriate multiple of 125 hours respectively.

(8)(i) Data from all emission tests (including voided tests) shall be air posted to the Administrator within 72 hours (or delivered within 5 working days). The manufacturer shall furnish to the Administrator an explanation for voiding any test. The Administrator will determine if voiding the testing was appropriate based upon the explanation given by the manufacturer for the voided test. If a manufacturer conducts multiple tests at any test point at which the data are intended to be used in the calculation of the deterioration factor,

the number of tests must be the same at each point and may not exceed three valid tests. Tests between test points may be conducted as required by the Administrator. In addition, all test data shall be compiled and provided to the Administrator in accordance with § 86.079–23. Where the Administrator conducts a test on a durability-data engine at a prescribed test point, the results of that test will be used in the calculation of the deterioration factor.

(ii) The results of all emission tests shall be recorded and reported to the Administrator using two places to the right of the decimal point. These numbers shall be rounded in accordance with the "rounding off method" specified in ASTM E 29–67.

(9) Whenever the manufacturer proposes to operate and test an engine which may be used for emission or durability data, he shall provide such information concerning components used on the engine as the Administrator may require and make the engine available for such testing under § 86.081–29 as the Administrator may require, before beginning to accumulate hours on the engine. Failure to comply with this requirement will invalidate all test data later submitted for this engine.

(10) Once a manufacturer begins to operate an emission-data or durability-data engine, as indicated by compliance with paragraph (b)(9) of this section, he shall continue to run any emission-data engine to 125 hours, any gasoline-fueled durability-data engine to 1,500 hours, and any diesel durability-data engine to 1,000 hours. The data from the engine will be used in the calculations under § 86.345. Discontinuation of an engine shall be allowed only with the prior written consent of the Administrator.

(11)(i) The Administrator may elect to operate and test any test engine during all or any part of the service accumulation and testing procedure. In such cases, the manufacturer shall provide the engine(s) to the Administrator with all information necessary to conduct the testing.

(ii) The test procedure (Subparts D of this part for gasoline-fueled engines, and Subparts I and D of this part for diesel engines) will be followed by the Administrator. The Administrator will test the engines at each test point. Maintenance may be performed by the manufacturer under such conditions as the Administrator may prescribe.

(iii) The data developed by the Administrator for the engine-system combination shall be combined with any applicable data supplied by the manufacturer on other engines of that combination to determine the applicable deterioration factors for the combination. In the case of a significant discrepancy between data developed by the Administrator and those submitted by the manufacturer, the Administrator's data shall be used in the determination of deterioration factors.

(12) Emission testing of any type with respect to any certification engine other than that specified in the subpart is not allowed except as such testing may be specifically authorized by the Administrator.

7. Section 81.081–28 is amended by revising paragraph (a)(4) and adding paragraph (a)(5).

§ 86.081-28 Compliance with emission standards.

(a) * * *

(4) The procedure for determining compliance of a new motor vehicle with exhaust emission standards is as follows, except where specified by paragraph (a)(5) of this section for the alternative Durability Program: * * *

* * * * *

(5) The procedure to determine the compliance of new motor vehicles in the Alternative Durability Program (described in § 86.081–13) is the same as described in paragraphs (a)(4)(iii) through (a)(4)(v) of this section. For the engine families that are included in the Alternative Durability Program, the exhaust emission deterioration factors used to determine compliance shall be those that the Administrator has approved under § 86.081–13(c). The evaporative emission deterioration factor for each evaporative emission family shall be determined and applied according to paragraph (a)(4) of this section. The procedure to determine the minimum exhaust emissions deterioration factors required under § 86.081–13(d) are as follows:

(i) Separate deterioration factors shall be determined from the exhaust emission results of the durability-data vehicles for each engine family group. A separate factor shall be established for exhaust HC, exhaust CO, and exhaust NO_x for each engine family group. The evaporative emission deterioration factor for each evaporative family will be determined and applied in accordance with the procedure of paragraph (a)(4) of this section.

(ii) The deterioration factors for each engine family group shall be determined by the Administrator using historical durability data from as many as 3 previous model years. These data will consist of deterioration factors generated by durability-data vehicles representing certified engine families and of deterioration factors from vehicles selected under § 86.081–24(h). The Administrator shall determine how these data will be combined for each engine family group.

(A) The test results to be used in the calculation of each deterioration factor to be combined for each engine family group shall be those test results specified in paragraph (a)(4)(i)(A) of this section.

(B) For each durability-data vehicle selected under § 86.081–24(h), all applicable exhaust emission results shall be plotted as a function of the mileage on the system, rounded to the nearest mile, and the best fit straight lines, fitted by the method of least squares, shall be drawn through all these data points. The exhaust deterioration factor for each durability-data vehicle shall be calculated as specified in paragraph (a)(4)(i)(B) of this section.

(C) *Line crossing.* For the purposes of paragraph (a)(5) of this section, line crossing occurs when either of the interpolated 4,000- and 50,000-mile points of the best fit straight line exceeds the applicable emission standard *and* at least one applicable data point exceeds the standard.

(1) The Administrator will not accept for certification line-crossing data from preproduction durability-data vehicles selected under § 86.081–24(c)(1), § 86.081–24 (h)(2), or (h)(3).

(2) The Administrator will not accept for certification line-crossing data from production durability-data vehicles selected under § 86.081–24(h)(1) *unless* the following is true: The 4,000-mile test result multiplied by the engine family group deterioration factor does not exceed the applicable emission standard. The deterioration factors used for this purpose shall be those that were used in the certification of the production vehicle. Manufacturers may calculate this product immediately after the 4,000-mile test of the vehicle. If the product exceeds the applicable standard, the manufacturer may, with the approval of the Administrator, discontinue the vehicle and substitute a new vehicle. The manufacturer may continue the original vehicle, but the data will not be acceptable if line crossing occurs.

(b)(1) Paragraph (b) of this section applies to heavy-duty engines.

* * * * *

8. Section 86.084–24 is amended by adding paragraphs (a)(8), (a)(9), (a)(10), and (h), and by revising paragraph (g)(1).

§ 86.084-24 Test vehicles and engines.

(a) * * *

(8) If the manufacturer elects to participate in the Alternative Durability Program, the engine families covered by an application for certification shall be

grouped together based upon similar engine design and emission control system characteristics. Each of these groups shall constitute a separate engine family group.

((9) To be classed in the same engine family group, engine families must contain engines identical in all of the following respects:

(i) The combustion cycle.

(ii) The cylinder block configuration (air-cooled or water-cooled; L-6, V-8, rotary, etc.).

(iii) Displacement (engines of different displacement within 50 cubic inches or 15 percent of the largest displacement and contained within a multidisplacement engine family will be included in the same engine family group).

(iv) Catalytic converter usage and basic type (non-catalyst, oxidation catalyst only, three-way catalyst equipped).

(10) Engine families identical in all respects listed in paragraph (a)(9) of this section may be further divided into different engine family groups if the Administrator determines that they are expected to have significantly different exhaust emission control system deterioration characteristics.

* * * * *

(g)(1) This paragraph applies to light-duty vehicles and light-duty trucks, but does not apply to the production vehicles selected under paragraph (h) of this section.

* * * * *

(h) *Alternative Durability Program durability-data vehicles.* Paragraph (h) of this section applies to light-duty vehicle and light-duty truck durability-data vehicles selected under the Alternative Durability Program. The Alternative Durability Program is described in § 86.081-13.

(1) In order to update the durability data to be used to determine a deterioration factor for each engine family group, the Administrator will select durability-data vehicles from the manufacturer's production line. Production vehicles will be selected from the 1981, 1982, and 1983 model year production of vehicles.

(i) The Administrator shall select the production durability-data vehicle designs from the designs that the manufacturer offers for sale. For each model year and for each engine family group, the Administrator may select production durability-data vehicle designs of equal number to the number of engine families within the engine family group, up to a maximum of three vehicles.

(ii) The production durability-data vehicles representing the designs selected in paragraph (h)(1)(i) of this section will be randomly selected from the manufacturer's production. The Administrator will make these random selections unless the manufacturer (with prior approval of the Administrator) elects to make the random selections.

(iii) The manufacturer may select additional production durability-data vehicle designs from within the engine family group. The production durability-data vehicles representing these designs shall be randomly selected from the manufacturer's production in accordance with paragraph (h)(1)(ii) of this section.

(iv) For each production durability-data vehicle selected under paragraph (h)(1) of this section, the manufacturer shall provide to the Administrator (before the vehicle is tested or begins service accumulation) the vehicle identification number. Before the vehicle begins service accumulation, the manufacturer shall also provide the Administrator with a description of the durability-data vehicle as specified by the Administrator.

(2) If, within an existing engine family group, a manufacturer requests to certify vehicles of a new design, engine family, emission control system, or with any other durability-related design difference, the Administrator will determine if the existing engine family group deterioration factor is appropriate for the new design. If the Administrator cannot make this determination or deems the deterioration factor not appropriate, the Administrator shall select preproduction durability-data vehicles under the provisions of paragraph (c) of this section. If vehicles are then certified using the new design, the Administrator may select production vehicles with the new design under the provisions of paragraph (h)(1) of this section.

(3) If a manufacturer requests to certify vehicles of a new design that the Administrator determines are a new engine family group, the Administrator shall select preproduction durability-data vehicles under the provisions of paragraph (c) of this section. If vehicles are then certified using the new design, the Administrator may select production vehicles of that design under the provisions of paragraph (h)(1) of this section.

9. Section 86.084-26 is amended by revising paragraphs (a)(4)(i) and (a)(4)(ii), and by adding paragraph (a)(4)(iii).

§ 86.084-26 Mileage and service accumulation; emission measurements.

(a) * * *

(4) *Durability-data vehicles.* Unless as otherwise provided for in § 86.079-23(a), durability-data vehicles shall be operated and tested as follows:

(i) *Gasoline-fueled.* Each gasoline-fueled durability-data vehicle selected by the Administrator or elected by the manufacturer under § 86.084-24(c)(1) shall be driven, with all emission control systems installed and operating, for 50,000 miles or such lesser distance as the Administrator may agree to as meeting the objective of this procedure. Complete exhaust emission tests shall be made on all durability-data vehicles selected by the Administrator or elected by the manufacturer under § 86.084-24(c) at the following mileage points except as specified by paragraph (a)(4)(iii) of this section: 0; 5,000; 10,000; 15,000; 20,000; 25,000; 30,000; 35,000; 40,000; 45,000; and 50,000. The Administrator may determine under §86.084-24(f) that no testing is required.

(ii) *Diesel.* Each diesel durability-data vehicle shall be driven, with all emission control systems installed and operating, for 50,000 miles or such lesser distance as the Administrator may agree to as meeting the objectives of the procedure. Complete emission tests (see §§ 86.106 through 86.145) shall be made at the following mileage points except as specified by paragraph (a)(4)(iii) of this section: 0; 5,000; 10,000; 15,000; 20,000; 25,000; 30,000; 35,000; 40,000; 45,000; and 50,000.

(iii) Production durability-data vehicles selected under § 86.084-24(h)(1) shall be driven and tested in accordance with paragraphs (a)(4)(i) and (a)(4)(ii) of this section with the exception that the emission test specified for the 5,000-mile point shall be conducted at the 4,000-mile point.

* * * * *

10. Section 86.084-28 is amended by revising paragraph (a)(4) and adding paragraph (a)(5).

§ 86.084-28 Compliance with emission standards.

(a) * * *

(4) The procedure for determining compliance of a new motor vehicle with exhaust emission standards is as follows, except where specified by paragraph (a)(5) of this section for the Alternative Durability Program:

* * * * *

(5) The procedure to determine the compliance of new motor vehicles in the Alternative Durability Program (described in § 86.081-13) is the same as described in paragraphs (a)(4)(iii) through (a)(4)(v) of this section. For the

engine families that are included in the Alternative Durability Program, the exhaust emission deterioration factors used to determine compliance shall be those that the Administrator has approved under § 86.081–13(c). The evaporative emission deterioration factor for each evaporative emission family shall be determined and applied according to paragraph (a)(4) of this section. The procedure to determine the minimum exhaust emission deterioration factors required under § 86.081–13(d) are as follows:

(i) Separate deterioration factors shall be determined from the exhaust emission results of the durability-data vehicles for each engine family group. A separate factor shall be established for exhaust HC, exhaust CO, and exhaust NOx for each engine family group. The evaporative emission deterioration factor for each evaporative family will be determined and applied in accordance with the procedure of paragraph (a)(4) of this section.

(ii) The deterioration factors for each engine family group shall be determined by the Administrator using historical durability data from as many as 3 previous model years. These data will consist of deterioration factors generated by durability-data vehicles representing certified engine families and of deterioration factors from vehicles selected under § 86.084–24(h). The Administrator shall determine how these data will be combined for each engine family group.

(A) The test results to be used in the calculation of each deterioration factor to be combined for each family group shall be those test results specified in paragraph (a)(4)(i)(A) of this section.

(B) For each durability-data vehicle selected under § 86.084–24(h), all applicable exhaust emission results shall be plotted as a function of the mileage on the system, rounded to the nearest mile, and the best fit straight lines, fitted by the method of least squares, shall be drawn through all these data points. The exhaust deterioration factor for each durability-data vehicle shall be calculated as specified in paragraph (a)(4)(i)(B) of this section.

(C) *Line crossing.* For the purposes of paragraph (a)(5) of this section, line crossing occurs when either of the interpolated 4,000- and 50,000-mile points of the best fit straight line exceeds the applicable emission standard *and* at least one applicable data point exceeds the standard.

(*1*) The Administrator will not accept for certification line-crossing data from preproduction durability-data vehicles selected under § 86.084–24(c)(1), § 86.084–24 (h)(2), or (h)(3).

(*2*) The Administrator will not accept for certification line-crossing data from production durability-data vehicles selected under § 86.084–24(h)(1) *unless* the following is true: The 4,000-mile test result multiplied by the engine family group deterioration factor does not exceed the applicable emission standard. The deterioration factors used for this purpose shall be those that were used in the certification of the production vehicle. Manufacturers may calculate this product immediately after the 4,000-mile test of the vehicle. If the product exceeds the applicable standard, the manufacturer may, with the approval of the Administrator, discontinue the vehicle and sutstitute a new vehicle. The manufacturer may continue the original vehicle, but the data will not be acceptable if line crossing occurs.

(b)(1) Paragraph (b) of this section applies to heavy-duty engines.

* * * * *

(Sections 206 and 301(a) of the Clean Air Act, as amended, 42 U.S.C. 7525 and 7601(a))

[FR Doc. 80-19514 Filed 6-27-80; 8:45 am]
BILLING CODE 6560-01-M

Federal Register

Monday
June 30, 1980

Part VII

Environmental Protection Agency

Primary Aluminum Industry; Amendments to the Performance Standards for New Stationary Sources

ENVIRONMENTAL PROTECTION AGENCY

40 CFR Part 60

[FRL 1442-1]

Standards of Performance for New Stationary Sources Primary Aluminum Industry; Amendments

AGENCY: Environmental Protection Agency (EPA).

ACTION: Final rule.

SUMMARY: The amendments permit fluoride emissions to exceed, under certain circumstances, emission limits contained in the previously promulgated standards of performance for new primary aluminum plants. Such excursions cannot be more than 0.3 kg/Mg of aluminum produced (0.6 lb/ton) above the promulgated standards of 0.95 kg/Mg (1.9 lb/ton) and 1.0 kg/Mg (2.0 lb/ton) for prebake and Soderberg plants, respectively. For an excursion to be allowed, a proper emission control system must have been installed and properly operated and maintained at the time of the excursion. The intended effect of these amendments is to take into account an inherent variability of fluoride emissions from the aluminum reduction process.

The amendments require monthly testing of emissions and revise Reference Method 14 for measuring fluoride emission rates. The amendments also respond to arguments raised during litigation of the standards of performance.

DATES: The effective date of the amendments is June 30, 1980. The applicability date of the amendments is October 23, 1974. All primary aluminum plants which commence construction on and after the applicability date are subject to the standards of performance, as amended here.

ADDRESSES: *Background Information Document.* The background information documents for the proposed and final amendments may be obtained from the U.S. EPA Library (MD-35), Research Triangle Park, North Carolina 27711, telephone (919) 541-2777. Please refer to *Primary Aluminum Background Information: Proposed Amendments* (EPA 450/2-76-025a) and *Promulgated Amendments* (EPA 450/3-79-026).

Docket: Docket No. OAQPS-78-10, containing supporting information used to develop the amendments, is available for public inspection and copying between 8:00 a.m. and 4:00 p.m., Monday through Friday, at EPA's Central Docket Section, Room 2902, Waterside Mall, 401 M Street, S.W., Washington, D.C. 20460.

FOR FURTHER INFORMATION CONTACT: John Crenshaw, Emission Standards and Engineering Division (MD-13), U.S. Environmental Protection Agency, Research Triangle Park, North Carolina 27711, telephone (919) 541-5477.

SUPPLEMENTARY INFORMATION:

Final Amendments

The amendments allow fluoride emissions from aluminum plant potrooms to exceed the original limits of 0.95 kg/Mg (1.9 lb/ton) for prebake plants and 1.0 kg/Mg (2.0 lb/ton) for Soderberg plants if the owner or operator of the plant can establish that a proper emission control system was installed and properly operated and maintained at the time the excursion above the original limits occurred. Emissions may not, however, exceed 1.25 kg/Mg (2.5 lb/ton) for prebake plants and 1.3 kg/Mg (2.6 lb/ton) for Soderberg plants at any time.

The amendments also require performance testing to be conducted at least once each month throughout the life of the plant. The owner or operator of a new plant may apply to the Administrator for an exemption from the monthly testing requirement for the primary control system and the anode bake plant. An exemption from the testing of secondary emissions from roof monitors, however, is not permitted.

Finally, the amendments: (1) require the potroom anemometers and associated equipment used in conjunction with Reference Method 14 to be checked for calibration once each year, unless the anemometers are found to be out of calibration, in which case an alternative schedule would be implemented; (2) clarify other Reference Method 14 procedures; (3) clarify the definition of *potroom group;* (4) replace English and metric units of measure with the International System of Units (SI); and (5) clarify the procedure for determining the rate of aluminum production for fluoride emission calculations. The amendments do not change the fluoride emission limit of 0.05 kg/Mg (0.1 lb/ton) of aluminum equivalent for anode baking facilities at prebake plants.

Summary of Environmental, Economic, and Energy Impacts

The amendments allow excursions above the original standard, but only under certain conditions. Each excursion must be reported to the Administrator and the adequacy of control equipment and operating and maintenance procedures must be established by the plant owner or operator. Based on emission test results at the Anaconda Aluminum Company's Sebree, Kentucky plant, such excursions may be expected approximately eight percent of the time. Assuming that each of these excursions is at the upper limit allowed (1.25 kg/Mg for a prebake plant), fluoride emissions from a typical new primary aluminum plant could be around three to four percent higher (3.8 Mg/yr, or 4.2 tons/yr, more) than had been originally calculated. It is important to stress that excursions are expected to occur at any new plant trying to meet the original standards; the amendments simply acknowledge that some excursions are unavoidable.

Although the emission control efficiency required by the original standards is still required, it would be theoretically possible to operate a new plant so that emissions were always at the upper limit permitted by these amendments. Using this "worst case" assumption, fluoride emissions from a typical new primary aluminum plant could increase above levels associated with the original emission limits by about 30 percent, or 33 Mg/yr (36 tons/yr). Assuming that two new plants become subject to the amended standards during the next five years, nationwide emissions of fluorides during that period could increase by 66 Mg/yr (72 tons/yr) above the levels which would result if the original limits were in effect. No other environmental impacts are associated with the amendments.

The amendments will result in performance test costs of about $415,000/yr during the first year and $330,000/yr during succeeding years of operation of a new plant. The increase in annualized costs, however, would be less than 0.5 percent for the first and succeeding years. There are no other significant costs associated with the amendments.

No increase in energy consumption will result from the amendments. The environmental, economic, and energy impacts are discussed in greater detail in *Primary Aluminum Background Information: Promulgated Amendments* (EPA 450/3-79-026).

Background

Standards of performance for new primary aluminum plants were proposed on October 23, 1974 (39 FR 37730), and promulgated on January 26, 1976 (41 FR 3826). These standards limited fluoride emissions to 1.0 kg/Mg (2 lb/ton) for Soderberg plants, 0.95 kg/Mg (1.9 lb/ton) for prebake plants, and 0.05 kg/Mg (0.1 lb/ton) for anode bake plants. There are two emission sources from Soderberg and prebake plants. The first source is the primary control system, which includes hoods to capture emissions from the pots and the control device

used to treat these emissions; the exhaust from this system still contains some fluorides. The second source is the roof monitor, through which flow the emissions (called secondary, or roof monitor, emissions) not captured by the primary control system. A few plants use secondary control systems to capture and collect roof monitor emissions.

Shortly after promulgation, petitions for review of the standards were filed by four aluminum companies. The principal argument raised by the petitioners was that the emission limits contained in the standards were too stringent and could not be achieved consistently by new, well-controlled facilities. Facilities which commenced construction prior to October 23, 1974, are not affected by the standard. Following discussions with the petitioning aluminum companies, EPA conducted an emission test program at the Anaconda Aluminum Company plant in Sebree, Kentucky. At the time of testing, the Sebree plant was the newest primary aluminum plant in the United States, and its emission control system was considered by the Administrator representative of the best technological system of continuous emission reduction. The purpose of the test program was to gather additional data for reevaluating the standards. The test results were available in August of 1977 and indicated that emissions for a new, well-controlled plant could exceed the original emission limits approximately eight percent of the time. The amendments proposed on September 19, 1978 (43 FR 42186) and promulgated here address this potential problem by amending the standards to permit excursions of fluoride emissions up to 0.3 kg/Mg (0.6 lb/ton) above the emission limits contained in the original standards provided that proper control equipment was installed and properly operated and maintained during the time the excursion occurred.

In addition to amending the original standards, EPA has revised Reference Method 14 to reflect knowledge gained during the Sebree test program. The revisions clarify and improve the reliability of the testing procedures, but do not change the basic test method and, therefore, do not invalidate earlier Method 14 test results.

Rationale

The Administrator's decision to amend the existing standard is based primarily on the results of the Sebree test program. The test results may be summarized as follows: (1) the measured emissions were variable, ranging from 0.43 to 1.37 kg/Mg (0.85 to 2.74 lb/ton) for single test runs; and (2) emission variability appeared to be inherent in the production process and beyond the control of plant personnel. Since the Sebree plant represents a best technological system of continuous emission reduction for new aluminum plants, the Administrator expects that the other new plants covered by the standard will also exhibit emission variability.

An EPA analysis of the nine Sebree test runs indicates that there is about eight percent probability that a performance test would violate the current standard. (A performance test is defined in 40 CFR 60.8(f) as the arithmetic mean of three separate test runs, except in situations where a run must be discounted or canceled and the Administrator approves using the arithmetic mean of two runs.) The petitioners have estimated chances of a violation ranging from about 2.5 to 10 percent. Although the Sebree data base is not large enough to permit a thorough statistical analysis, the Administrator believes it is adequate to demonstrate a need for amending the current standard.

The approach selected is to amend Subpart S to allow a performance test result to be above the current standard provided the owner or operator submits to EPA a report clearly demonstrating that the emission control system was properly operated and maintained during the excursion above the standard. The report would be used as evidence that the high emission level resulted from random and uncontrollable emission variability, and that the emission variability was entirely beyond the control of the owner or operator of the affected facility. Under no circumstances, however, would performance test results be allowed above 1.25 kg/Mg (2.5 lb/ton) for prebake plants or 1.3 kg/Mg (2.6 lb/ton) for Soderberg plants. The Administrator believes that emissions from a plant equipped with the proper control system which is properly operated and maintained would be below these limits at all times.

For performance test results which fall between the original standard and the 1.25 or 1.3 kg/Mg upper limit to be considered excursions rather than violations, the owner or operator of the affected facility must, within 15 days of receipt of such performance test results, submit a report to the Enforcement Division of the appropriate EPA Regional Office. As a minimum, the report should establish that all necessary control devices were on-line and operating properly during the performance test, describe the operation and maintenance procedures followed, and set forth any explanation for the excursion.

The amendments also require, following the initial performance test required under 40 CFR 60.8(a), additional performance testing at least once each month during the life of the affected facility. During visits to existing plants, EPA personnel have observed that the emission control systems are not always operated and maintained as well as possible. The Administrator believes that good operation and maintenance of control systems are essential and expects the monthly testing requirement to help achieve this goal. The Administrator has the authority under section 114 of the Clean Air Act to require additional testing if necessary.

It is important to emphasize that the purpose of the amendments is to allow for inherent emission variability, not to permit substandard control equipment installation, operation or maintenance. Unfortunately, proper control equipment and proper operation and maintenance are difficult to describe and may vary considerably on a case-by-case basis. There are, however, a few guidelines that can be used as indicators.

The first guideline is that the control equipment should be designed to meet the original standard. This means a 95–97 percent overall control efficiency (capture efficiency times collection efficiency) for a potroom group. Equipment capable of this level of control is described in the background document (EPA 450/2-74-020a). Assuming proper control equipment is installed, the adequacy of operating and maintenance procedures can be evaluated on the basis of the frequency of excursions above the original standard. Based on the Sebree test results, more than one excursion per year (assuming performance tests are conducted monthly) may indicate a problem. Note, however, that legally every performance test result could be an excursion as long as proper equipment, operation and maintenance are shown.

As a guide to proper operation and maintenance, the following are considered basic to good control of emissions:

(1) Hood covers should fit properly and be in good repair;

(2) If the exhaust system is equipped with an adjustable air damper system, the hood exhaust rate for individual pots should be increased whenever hood covers are removed from a pot (the exhaust system should not, however, be overloaded by placing too many pots on high exhaust);

(3) Hood covers should be replaced as soon as possible after each potroom operation;

(4) Dust entrainment should be minimized during materials handling operations and sweeping of the working aisles;

(5) Only tapping crucibles with functional aspirator air return systems (for returning gases under the collection hooding) should be used; and

(6) The primary control system should be regularly inspected and properly maintained.

The amendments affect not only prebake designs such as the Sebree plant, but also Soderberg plants. Available data for existing plants indicate that Soderberg and prebake plants have similar emission variability. Thus, the Administrator feels justified in extrapolating the conclusions about the Sebree prebake plant to cover Soderberg designs. It is unlikely that any new Soderberg plant will be built due to the high cost of emission control for these designs. However, existing Soderberg plants may be modified to such an extent that they would be subject to these regulations.

Under the amendments, anode bake plants would be subject to the monthly testing requirement, but emissions would not be allowed under any circumstances to be above the level of the current bake plant standard. Since there is no evidence that bake plant emissions are as variable as potroom emissions, there is no need to allow for excursions above the bake plant standard.

The amendments allow the owner or operator of a new plant to apply to the Administrator for an exemption from the monthly testing requirement for the primary control system and the anode bake plant. The Administrator believes that the testing of these systems as often as once each month may be unreasonable given that (1) the contribution of primary and bake plant emissions (after exhausting from the primary control system) to the total emission rate is minor, averaging about 2.5 and 5 percent, respectively; (2) primary and bake plant emissions are much less variable than secondary emissions; and (3) the cost of primary and bake plant emissions sampling is high. An application to the Administrator for an exemption from monthly testing would be required to include (1) evidence that the primary and bake plant emissions have low variability; (2) an alternative testing schedule; and (3) the method to be used to determine primary control system emissions for the purpose of calculating total fluoride emissions from the potroom group.

The Administrator estimates the costs associated with monthly performance testing to average about $4,200 for primary tests, $5,100 for secondary tests, and $4,200 for bake plant tests. These estimates assume that (1) testing would be performed by plant personnel; (2) each monthly performance test would consist of the average of three 24 hour runs; (3) sampling would be performed by two crews working 13-hour shifts; (4) primary control system sampling would be performed at a single point in the stack; and (5) Sebree in-house testing costs would be representative of average costs for other new plants. Although these assumptions may not hold for all situations, the Administrator believes they provide a representative estimate of what testing costs would be for new plants.

Also amended is the procedure for determining the rate of aluminum production. Previously, the rate was based on the weight of metal tapped during the test period. However, since the weight of metal tapped does not always equal the weight of metal produced, undertapping or overtapping during a test period would result in erroneous production rates. The Administrator believes it is more reasonable to judge the weight of metal produced according to the weight of metal tapped during a 30-day period (720 hours) prior to and including the test date. The 30-day period allows overtapping and undertapping to average out, and gives a more accurate estimate of the true production rate.

Public Comments

Upon proposal of the amendments, the public was invited to submit written comments on all aspects of the amendments and Reference Method 14 revisions. These comments were reviewed and considered in developing the final amendments. All of the comments received are summarized and discussed in *Primary Aluminum Background Information: Promulgated Amendments* (EPA 450/3-79-026).

The most significant change resulting from these comments concerns the requirement in Reference Method 14 to periodically check the calibration of the anemometers located in the roof monitors of aluminum plant potrooms. The use of anemometers is required by the test method to determine the velocity and flow rate of air exiting the potroom roofs. Commenters felt that the proposed requirement to check anemometer calibration every month was unnecessary and would lead to substantially increased costs.

Review of anemometer calibration data indicates that anemometer calibration checks as often as every month are unnecessary. Consequently, Reference Method 14 has been revised to require an anemometer calibration check 12 months after the initial anemometer installation. The results of this check will be used to determine the schedule of subsequent anemometer checks.

Several commenters noted that the proposed requirement to conduct performance testing at least once each month throughout the life of a new primary aluminum plant would impose a large economic burden on the plant. In general, the commenters believed that testing at less frequent intervals should be sufficient to determine compliance with the standard. Three alternatives to monthly performance testing were suggested:

(1) One commenter believed that an initial performance test would be sufficient to demonstrate compliance. Periodic visual inspections could then be used to determine whether the control systems were being properly maintained. If the visual inspections indicated that maintenance was poor, monthly testing could then be required. This procedure would not impose the burden of monthly testing on the entire industry.

(2) Another commenter, noting that the proposed monthly testing requirement was excessively stringent, recommended that criteria be established for determining when monthly testing is required. For example, testing could be performed on a semi-annual basis until a violation occurred, when testing would revert to a monthly schedule.

(3) A third commenter suggested that the provisions permitting the Administrator, upon application, to establish an alternative test schedule for primary and bake plant emissions be extended to include secondary emissions. For example, quarterly testing of secondary emissions could be required until a violation occurred. Monthly testing could then be invoked for some period of time, possibly six months, until emissions were once again consistently below the level of the standard. Quarterly testing would then resume.

During the development of the amendments, the administrator learned that the operation and maintenance of aluminum plant emission control systems had seriously deteriorated during the past several years. The Administrator believes that regular emission testing will help remedy this situation by providing an incentive for

good operation and maintenance throughout the life of the plant. Although no continuous monitoring method is available, the level of roof monitor emissions provides a good indication of the adequacy of operation and maintenance procedures for the most sensitive portion of the primary control system: capture of the pot emissions. The frequency of testing selected—once per month—is a judgmental compromise between high testing costs (as would occur with weekly tests) and the possibility of inadequate maintenance between tests (which seems more likely to occur as the time between tests increases).

In evaluating comments on the proposed monthly testing requirement, the administrator focused his attention on costs. Since the cost of the monthly testing requirement is less than 0.5 percent of the annualized costs of a typical primary aluminum plant, the Administrator considered the requirement reasonable.

The original standards required potroom emissions to be below 0.95 kg/Mg (1.9 lb/ton) for prebake plants and 1.0 kg/Mg (2.0 lb/ton) for Soderberg plants. One commenter, noting that the 0.05 kg/Mg (0.1 lb/ton) difference between the standards is reasonable in view of the differences between the two types of plants, felt this same reasoning should be followed in developing the proposed never-to-be-exceeded limit of 1.25 kg/Mg (2.5 lb/ton) which applied to both prebake and Soderberg plants. The commenter recommended that a never-to-be-exceeded limit of 1.3 kg/Mg (2.6 lb/ton) be established for Soderberg plants while retaining the proposed 1.25 kg/Mg (2.5 lb/ton) limit for prebake plants.

This comment is incorporated in the final amendments, which allow emissions from Soderberg plants where exemplary operation and maintenance of the emission control systems has been demonstrated to be as high as 1.3 kg/Mg (2.6 lb/ton).

One commenter expressed concern over the correct number or Reference Method 14 sampling manifolds to be located in potroom groups where two or more potroom segments are ducted to a common control system. The regulation defines *potroom group* as an uncontrolled potroom, a potroom which is controlled individually, or a group of potrooms or potroom segments ducted to a common control system. In situations where a potroom group consists of a group of potroom segments ducted to a common control system, the manifold would be installed in only one potroom segment. The manifold may not be divided among potroom segments; however, additional sampling manifolds may be installed in the other segments, if desired.

When only one manifold is located in a potroom group, care must be taken to ensure that operations are normal in the potroom segments where manifolds are not located, but which are ducted to the same control system. During normal operation, most pots should be operating, no major upsets should occur, and the operating and maintenance procedures followed in each potroom segment, including the segment tested, should be the same. Otherwise, the emission levels measured in the tested potroom segment may not be representative of emission levels in the other potroom segments.

One commenter felt that the amendments would unjustly require the use of tapping crucibles with aspirator air return systems, since the preamble for the proposed amendment stated that certain operating and maintenance procedures, including the use of aspirator air return systems, represent good emission control and should be implemented. Although this statement reflects the Administrator's judgment about which procedures would enable the standards to be achieved, the regulation does not actually require that these procedures be implemented. Instead these procedures provide useful guidance for improving emission control when the standards are being exceeded.

If emissions are below 0.95 kg/Mg (1.9 lb/ton) for prebake potrooms and 1.0 kg/Mg (2.0 lb/ton) for Soderberg potrooms, any combination of procedures may be used. If emission levels are between 0.95 and 1.25 kg/Mg (1.9 and 2.5 lb/ton) for prebake potrooms or 1.0 and 1.3 kg/Mg (2.0 and 2.6 lb/ton) for Soderberg potrooms, the regulation requires the owner or operator of a plant to demonstrate that exemplary operating and maintenance procedures were used. Otherwise the excursion is considered a violation of the standard. The Administrator has not defined exemplary operating and maintenance procedures in the regulation because different plants, depending on plant design, may incorporate different procedures, but the basic procedures listed in the preamble rationale provide guidance as to which operating and maintenance procedures should be effected to reduce or prevent excursions.

Several commenters expressed concern that the standards of performance and test methods would be applied to existing primary aluminum plants. It is emphasized, however, that the standards and test methods apply only to new, modified, or reconstructed plants. Existing plants often differ in design from new plants and cannot be controlled to the same level, except at much higher costs. As an aid to the States in controlling emissions from existing primary aluminum plants, the Administrator has recently published draft emission guidelines for existing plants (44 FR 21754). These draft guidelines may be obtained from the U.S. EPA Library. Request *Primary Aluminum Draft Guidelines for Control of Fluoride Emissions from Existing Primary Aluminum Plants* (EPA 450/2-78-049a).

Another commenter was concerned about the required length of each test run. Section 5.3.4 of Reference Method 14 states that each test run shall last at least eight hours, and if a question exists as to the representativeness of an eight-hour period, a longer period should be selected. It is essential that the sampling period be representative of all potroom operations and events, including tapping, carbon setting, and tracking. For most recently-constructed plants, 24 hours are required for all potroom operations and events to occur in the area beneath the sampling manifold. Thus, a 24-hour sampling period would be necessary for these plants.

Another commenter expressed concern about the procedure for conducting performance tests. The General Provisions for standards of performance for new stationary sources [40 CFR 60.8(f)] state that each performance test shall consist of the arithmetic mean of three separate test runs. Although the results of the three test runs are to be calculated separately, the runs may be conducted consecutively, as was done during the Sebree test program.

One commenter suggested that the rate of aluminum production, as used to calculate final emission rates, be based on the weight of metal tapped during the month in which testing was performed rather than on the test date. This, the commenter believed, would be a more convenient and practical method for calculating the aluminum production rate because production records are commonly kept on a monthly basis. The Administrator believes, however, that if the rate of aluminum production were determined on a calendar-month basis, as the commenter suggests, then in situations where testing is conducted at the beginning of a month, the final test results would not be known until the end of the month. This delay could allow emissions to be above the standard for nearly an entire month before a violation could be determined and corrective actions taken. It is

preferable that the test results be known as soon as possible after the testing is completed, as provided for in the proposed and final amendments.

As a result of comments, several other minor changes were made to the proposal. These include provisions allowing an owner or operator the option of: (1) installing anemometers halfway across the width of the potroom roof monitor; (2) balancing the sampling manifold for flow rate prior to its installation in the roof monitor; or (3) making anemometer installations non-permanent.

Docket

The docket is an organized and complete file of all the information submitted to or otherwise considered in the development of this rulemaking. The principal purposes of the docket are: (1) to allow interested parties to readily identify and locate documents so that they can intelligently and effectively participate in the rulemaking process; and (2) to serve as the record in case of judicial review. The docket is available for public inspection and copying, as noted under ADDRESSES.

Miscellaneous

The proposed amendments contained a revision to Section 60.8(d) of the General Provisions which would have allowed the owner or operator to give less than 30 days prior notice of testing if required to do so in specific regulations. Since this revision has already been promulgated with another regulation (44 FR 33580), it is not contained in the final amendments promulgated here.

The final amendments do not alter the applicability date of the original standards. The standards continue to apply to all new primary aluminum plants for which construction or modification began on or after October 23, 1974, the original proposal date.

As prescribed by section 111 of the Clean Air Act, promulgation of the original standards of performance (41 FR 3826) was preceded by the Administrator's determination that primary aluminum plants contribute significantly to air pollution which causes or contributes to the endangerment of public health or welfare. In accordance with section 117 of the Act, publication of the originally proposed standards (39 FR 37730) was preceded by consultation with appropriate advisory committees, independent experts, and Federal departments and agencies.

It should be noted that standards of performance for new sources established under section 111 of the Clean Air Act reflect:

> * * * application of the best technological system of continuous emission reduction which (taking into consideration the cost of achieving such emission reduction, and any nonair quality health and environmental impact and energy requirements) the Administrator determines has been adequately demonstrated [section 111(a)(1)].

Although there may be emission control technology available that can reduce emissions below those levels required to comply with standards of performance, this technology might not be selected as the basis of standards of performance due to costs associated with its use. Accordingly, standards of performance should not be viewed as the ultimate in achievable emission control. In fact, the Act requires (or has the potential for requiring) the imposition of a more stringent emission standard in several situations.

For example, applicable costs do not necessarily play as prominent a role in determining the "lowest achievable emission rate" for new or modified sources locating in nonattainment areas, i.e., those areas where statutorily-mandated health and welfare standards are being violated. In this respect, section 173 of the Act requires that new or modified sources constructed in an area which exceeds the National Ambient Air Quality Standard (NAAQS) must reduce emissions to the level which reflects the "lowest achievable emission rate" (LAER), as defined in section 171(3) for such category of source. The statute defines LAER as that rate of emissions based on the following, whichever is more stringent:

> (A) The most stringent emission limitation which is contained in the implementation plan of any State for such class or category of source, unless the owner or operator of the proposed source demonstrates that such limitations are not achievable, or
>
> (B) The most stringent emission limitation which is achieved in practice by such class or category of source.

In no event can the emission rate exceed any applicable new source performance standard (section 171(3)).

A similar situation may arise under the prevention of significant deterioration of air quality provisions of the Act (Part C). These provisions require that certain sources (referred to in section 169(1)) employ "best available control technology" (BACT) as defined in section 169(3) for all pollutants regulated under the Act. Best available control technology must be determined on a case-by-case basis, taking energy, environmental and economic impacts and other costs into account. In no event may the application of BACT result in emissions of any pollutants which will exceed the emissions allowed by any applicable standard established pursuant to section 111 (or 112) of the Act.

In all events, State Implementation Plans (SIP's) approved or promulgated under section 110 of the Act must provide for the attainment and maintenance of NAAQS designed to protect public health and welfare. For this purpose, SIP's must in some cases require greater emission reduction than those required by standards of performance for new sources.

Finally, States are free under section 116 of the Act to establish even more stringent limits than those established under section 111 and prospective owners and operators of new sources should be aware of this possibility in planning for such facilities.

Section 317 of the Clean Air Act requires the Administrator to prepare an economic impact assessment and environmental impact statement for substantial revisions to standards of performance. Although these amendments are not substantial revisions, certain economic information was developed and is presented in *Primary Aluminum Background Information: Promulgated Amendments* (EPA 450/3-79-026). The revisions to the standards of performance were not significant enough to warrant preparation of an environmental impact statement.

Dated: June 24, 1980.

Douglas M. Costle,

Administrator.

PART 60—STANDARDS OF PERFORMANCE FOR NEW STATIONARY SOURCES

40 CFR Part 60 is revised as follows:

1. Subpart S is revised to read as follows:

Subpart S—Standards of Performance for Primary Aluminum Reduction Plants

Authority: Sections 111 and 301(a) of the Clean Air Act as amended (42 U.S.C. 7411, 7601(a)), and additional authority as noted below.

Section 60.190 paragraph (a) is revised as follows:

§ 60.190 Applicability and designation of affected facility.

(a) The affected facilities in primary aluminum reduction plants to which this subpart applies are potroom groups and anode bake plants.

* * * * *

Section 60.191 is revised to read as follows:

§ 60.191 Definitions.

As used in this subpart, all terms not defined herein shall have the meaning given them in the Act and in subpart A of this part.

"Aluminum equivalent" means an amount of aluminum which can be produced from a Mg of anodes produced by an anode bake plant as determined by § 60.195(g).

"Anode bake plant" means a facility which produces carbon anodes for use in a primary aluminum reduction plant.

"Potroom" means a building unit which houses a group of electrolytic cells in which aluminum is produced.

"Potroom group" means an uncontrolled potroom, a potroom which is controlled individually, or a group of potrooms or potroom segments ducted to a common control system.

"Primary aluminum reduction plant" means any facility manufacturing aluminum by electrolytic reduction.

"Primary control system" means an air pollution control system designed to remove gaseous and particulate flourides from exhaust gases which are captured at the cell.

"Roof monitor" means that portion of the roof of a potroom where gases not captured at the cell exit from the potroom.

"Total fluorides" means elemental fluorine and all fluoride compounds as measured by reference methods specified in § 60.195 or by equivalent or alternative methods (see § 60.8(b)).

Section 60.192 is revised to read as follows:

§ 60.192 Standards for fluorides.

(a) On and after the date on which the initial performance test required to be conducted by § 60.8 is completed, no owner or operator subject to the provisions of this subpart shall cause to be discharged into the atmosphere from any affected facility any gases containing total fluorides, as measured according to § 60.8 above, in excess of:

(1) 1.0 kg/Mg (2.0 lb/ton) of aluminum produced for potroom groups at Soderberg plants: except that emissions between 1.0 kg/Mg and 1.3 kg/Mg (2.6 lb/ton) will be considered in compliance if the owner or operator demonstrates that exemplary operation and maintenance procedures were used with respect to the emission control system and that proper control equipment was operating at the affected facility during the performance tests;

(2) 0.95 kg/Mg (1.9 lb/ton) of aluminum produced for potroom groups at prebake plants; except that emissions between 0.95 kg/Mg and 1.25 kg/Mg (2.5 lb/ton) will be considered in compliance if the owner or operator demonstrates that exemplary operation and maintenance procedures were used with respect to the emission control system and that proper control equipment was operating at the affected facility during the performance test; and

(3) 0.05 kg/Mg (0.1 lb/ton) of aluminum equivalent for anode bake plants.

(b) Within 30 days of any performance test which reveals emissions which fall between the 1.0 kg/Mg and 1.3 kg/Mg levels in paragraph (a)(1) of this section or between the 0.95 kg/Mg and 1.25 kg/Mg levels in paragraph (a)(2) of this section, the owner or operator shall submit a report indicating whether all necessary control devices were on-line and operating properly during the performance test, describing the operating and maintenance procedures followed, and setting forth any explanation for the excess emissions, to the Director of the Enforcement Division of the appropriate EPA Regional Office.

Section 60.193 is revised to read as follows:

§ 60.193 Standard for visible emissions.

(a) On and after the date on which the performance test required to be conducted by § 60.8 is completed, no owner or operator subject to the provisions of this subpart shall cause to be discharged into the atmosphere:

(1) From any potroom group any gases which exhibit 10 percent opacity or greater, or

(2) From any anode bake plant any gases which exhibit 20 percent opacity or greater.

Section 60.194 paragraphs (a) and (b) are revised as follows:

§ 60.194 Monitoring of operations.

(a) The owner or operator of any affected facility subject to the provisions of this subpart shall install, calibrate, maintain, and operate monitoring devices which can be used to determine daily the weight of aluminum and anode produced. The weighing devices shall have an accuracy of ± 5 percent over their operating range.

(b) The owner or operator of any affected facility shall maintain a record of daily production rates of aluminum and anodes, raw material feed rates, and cell or potline voltages.

(Section 114 of the Clean Air Act as amended (42 U.S.C. 7414))

* * * * *

Section 60.195 is revised as follows:

§ 60.195 Test methods and procedures.

(a) Following the initial performance test as required under § 60.8(a), an owner or operator shall conduct a performance test at least once each month during the life of the affected facility, except when malfunctions prevent representative sampling, as provided under § 60.8(c). The owner or operator shall give the Administrator at least 15 days advance notice of each test. The Administrator may require additional testing under section 114 of the Clean Air Act.

(b) An owner or operator may petition the Administrator to establish an alternative testing requirement that requires testing less frequently than once each month for a primary control system or an anode bake plant. If the owner or operator show that emissions from the primary control system or the anode bake plant have low variability during day-to-day operations, the Administrator may establish such an alternative testing requirement. The alternative testing requirement shall include a testing schedule and, in the case of a primary control system, the method to be used to determine primary control system emissions for the purpose of performance tests. The Administrator shall publish the alternative testing requirement in the Federal Register.

(c) Except as provided in § 60.8(b), reference methods specified in Appendix A of this part shall be used to determine compliance with the standards prescribed in § 60.192 as follows:

(1) For sampling emissions from stacks:

(i) Method 1 for sample and velocity traverses,

(ii) Method 2 for velocity and volumetric flow rate,

(iii) Method 3 for gas analysis, and

(iv) Method 13A or 13B for the concentration of total fluorides and the associated moisture content.

(2) For sampling emissions from roof monitors not employing stacks or pollutant collection systems:

(i) Method 1 for sample and velocity traverses,

(ii) Method 2 and Method 14 for velocity and volumetric flow rate,

(iii) Method 3 for gas analysis, and

(iv) Method 14 for the concentration of total fluorides and associated moisture content.

(3) For sampling emissions from roof monitors not employing stacks but equipped with pollutant collection systems, the procedures under § 60.8(b) shall be followed.

(d) For Method 13A or 13B, the sampling time for each run shall be at least 8 hours for any potroom sample

and at least 4 hours for any anode bake plant sample, and the minimum sample volume shall be 6.8 dscm (240 dscf) for any potroom sample and 3.4 dscm (120 dscf) for any anode bake plant sample except that shorter sampling times or smaller volumes, when necessitated by process variables or other factors, may be approved by the Administrator.

(e) The air pollution control system for each affected facility shall be constructed so that volumetric flow rates and total fluoride emissions can be accurately determined using applicable methods specified under paragraph (c) of this section.

(f) The rate of aluminum production is determined by dividing 720 hours into the weight of aluminum tapped from the affected facility during a period of 30 days prior to and including the final run of a performance test.

(g) For anode bake plants, the aluminum equivalent for anodes produced shall be determined as follows:

(1) Determine the average weight (Mg) of anode produced in anode bake plant during a representative oven cycle using a monitoring device which meets the requirements of § 60.194(a).

(2) Determine the average rate of anode production by dividing the total weight of anodes produced during the representative oven cycle by the length of the cycle in hours.

(3) Calculate the aluminum equivalent for anodes produced by multiplying the average rate of anode production by two. (Note: An owner or operator may establish a different multiplication factor by submitting production records of the Mg of aluminum produced and the concurrent Mg of anode consumed by potrooms.)

(h) For each run, potroom group emissions expressed in kg/Mg of aluminum produced shall be determined using the following equation:

$$Epg = \frac{(CsQs)_1 10^{-6} + (CsQs)_2 10^{-6}}{M}$$

Where:

Epg = potroom group emissions of total fluorides in kg/Mg of aluminum produced.

Cs = concentration of total fluorides in mg/dscm as determined by Method 13A or 13B, or by Method 14, as applicable.

Qs = volumetric flow rate of the effluent gas stream in dscm/hr as determined by Method 2 and/or Method 14, as applicable.

10^{-6} = conversion factor from mg to kg.

M = rate of aluminum production in Mg/hr as determined by § 60.195(f).

$(CsQs)_1$ = product of Cs and Qs for measurements of primary control system effluent gas streams.

$(CsQs)_2$ = product of Cs and Qs for measurements of secondary control system or roof monitor effluent gas streams.

Where an alternative testing requirement has been established for the primary control system, the calculated value $(CsQs)_1$ from the most recent performance test will be used.

(i) For each run, as applicable, anode bake plant emissions expressed in kg/Mg of aluminum equivalent shall be determined using the following equation:

$$Ebp = \frac{CsQs\ 10^{-6}}{Me}$$

Where:

Ebp = anode bake plant emissions of total fluorides in kg/Mg of aluminum equivalent.

Cs = concentration of total fluorides in mg/dscm as determined by Method 13A or 13B.

Qs = volumetric flow rate of the effluent gas stream in dscm/hr as determined by Method 2.

10^{-6} = conversion factor from mg to kg.

Me = aluminum equivalent for anodes produced by anode bake plants in Mg/hr as determined by § 60.195(g).

(Section 114 of the Clean Air Act as amended (42 U.S.C. 7414))

2. Method 14, under Appendix A—Reference Methods, is revised to read as follows:

Appendix A—Reference Methods

* * * * *

METHOD 14—DETERMINATION OF FLUORIDE EMISSIONS FROM POTROOM ROOF MONITORS FOR PRIMARY ALUMINUM PLANTS

1. *Applicability and Principle.*

1.1 Applicability. This method is applicable for the determination of fluoride emissions from stationary sources only when specified by the test procedures for determining compliance with new source performance standards.

1.2 Principle. Gaseous and particulate fluoride roof monitor emissions are drawn into a permanent sampling manifold through several large nozzles. The sample is transported from the sampling manifold to ground level through a duct. The gas in the duct is sampled using Method 13A or 13B—Determination of Total Fluoride Emissions from Stationary Sources. Effluent velocity and volumetric flow rate are determined with anemometers located in the roof monitor.

2. *Apparatus.*

2.1 Velocity measurement apparatus.

2.1.1 Anemometers. Propeller anemometers, or equivalent. Each anemometer shall meet the following specifications: (1) Its propeller shall be made of polystyrene, or similar material of uniform density. To insure uniformity of performance among propellers, it is desirable that all propellers be made from the same mold; (2) The propeller shall be properly balanced, to optimize performance; (3) When the anemometer is mounted horizontally, its threshold velocity shall not exceed 15 m/min (50 fpm); (4) The measurement range of the anemometer shall extend to at least 600 m/min (2,000 fpm); (5) The anemometer shall be able to withstand prolonged exposure to dusty and corrosive environments; one way of achieving this is to continuously purge the bearings of the anemometer with filtered air during operation; (6) All anemometer components shall be properly shielded or encased, such that the performance of the anemometer is uninfluenced by potroom magnetic field effects; (7) A known relationship shall exist between the electrical output signal from the anemometer generator and the propeller shaft rpm, at a minimum of three evenly spaced rpm settings between 60 and 1800 rpm; for the 3 settings, use 60±15, 900±100, and 1800±100 rpm. Anemometers having other types of output signals (e.g., optical) may be used, subject to the approval of the Administrator. If other types of anemometers are used, there must be a known relationship (as described above) between output signal and shaft rpm; also, each anemometer must be equipped with a suitable readout system (See Section 2.1.3).

2.1.2 Installation of anemometers.

2.1.2.1 If the affected facility consists of a single, isolated potroom (or potroom segment), install at least one anemometer for every 85 m of roof monitor length. If the length of the roof monitor divided by 85 m is not a whole number, round the fraction to the nearest whole number to determine the number of anemometers needed. For monitors that are less than 130 m in length, use at least two anemometers. Divide the monitor cross-section into as many equal areas as anemometers and locate an anemometer at the centroid of each equal area. See exception in Section 2.1.2.3.

2.1.2.2 If the affected facility consists of two or more potrooms (or potroom segments) ducted to a common control device, install anemometers in each potroom (or segment) that contains a sampling manifold. Install at least one anemometer for every 85 m of roof monitor length of the potroom (or segment). If the potroom (or segment) length divided by 85 is not a whole number, round the fraction to the nearest whole number to determine the number of anemometers needed. If the potroom (or segment) length is less than 130 m, use at least two anemometers. Divide the potroom (or segment) monitor cross-section into as many equal areas as anemometers and locate an anemometer at the centroid of each equal area. See exception in Section 2.1.2.3.

2.1.2.3 At least one anemometer shall be installed in the immediate vicinity (i.e., within 10 m) of the center of the manifold (See Section 2.2.1). For its placement in relation to the width of the monitor, there are

two alternatives. The first is to make a velocity traverse of the width of the roof monitor where an anemometer is to be placed and install the anemometer at a point of average velocity along this traverse. The traverse may be made with any suitable low velocity measuring device, and shall be made during normal process operating conditions.

The second alternative, at the option of the tester, is to install the anemometer halfway across the width of the roof monitor. In this latter case, the velocity traverse need not be conducted.

2.1.3 Recorders. Recorders, equipped with suitable auxiliary equipment (e.g. transducers) for converting the output signal from each anemometer to a continuous recording of air flow velocity, or to an integrated measure of volumetric flowrate. A suitable recorder is one that allows the output signal from the propeller anemometer to be read to within 1 percent when the velocity is between 100 and 120 m/min (350 and 400 fpm). For the purpose of recording velocity, "continuous" shall mean one readout per 15-minute or shorter time interval. A constant amount of time shall elapse between readings. Volumetric flow rate may be determined by an electrical count of anemometer revolutions. The recorders or counters shall permit identification of the velocities or flowrate measured by each individual anemometer.

2.1.4 Pitot tube. Standard-type pitot tube, as described in Section 2.7 of Method 2, and having a coefficient of 0.99±0.01.

2.1.5 Pitot tube (optional). Isolated, Type S pitot, as described in Section 2.1 of Method 2. The pitot tube shall have a known coefficient, determined as outlined in Section 4.1 of Method 2.

2.1.6 Differential pressure gauge. Inclined manometer or equivalent, as described in Section 2.1.2 of Method 2.

2.2 Roof monitor air sampling system.

2.2.1 Sampling ductwork. A minimum of one manifold system shall be installed for each potroom group (as defined in Subpart S, Section 60.191). The manifold system and connecting duct shall be permanently installed to draw an air sample from the roof monitor to ground level. A typical installation of a duct for drawing a sample from a roof monitor to ground level is shown in Figure 14-1. A plan of a manifold system that is located in a roof monitor is shown in Figure 14.2. These drawings represent a typical installation for a generalized roof monitor. The dimensions on these figures may be altered slightly to make the manifold system fit into a particular roof monitor, but the general configuration shall be followed. There shall be eight nozzles, each having a diameter of 0.40 to 0.50 m. Unless otherwise specified by the Administrator, the length of the manifold system from the first nozzle to the eighth shall be 35 m or eight percent of the length of the potroom (or potroom segment) roof monitor, whichever is greater. The duct leading from the roof monitor manifold shall be round with a diameter of 0.30 to 0.40 m. As shown in Figure 14-2, each of the sample legs of the manifold shall have a device, such as a blast gate or valve, to enable adjustment of the flow into each sample nozzle.

BILLING CODE 6560-01-M

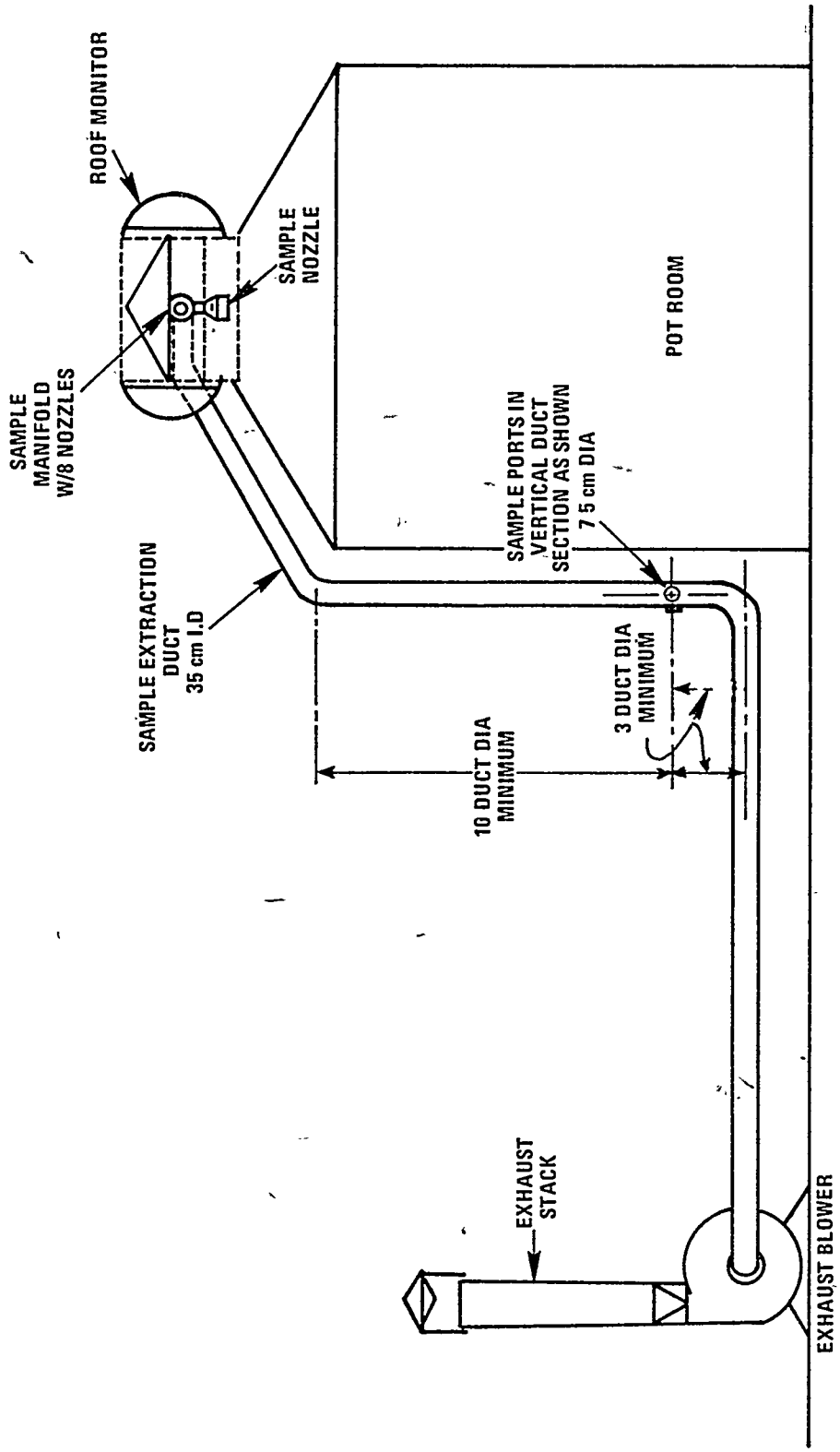

Figure 14 1 Roof monitor sampling system

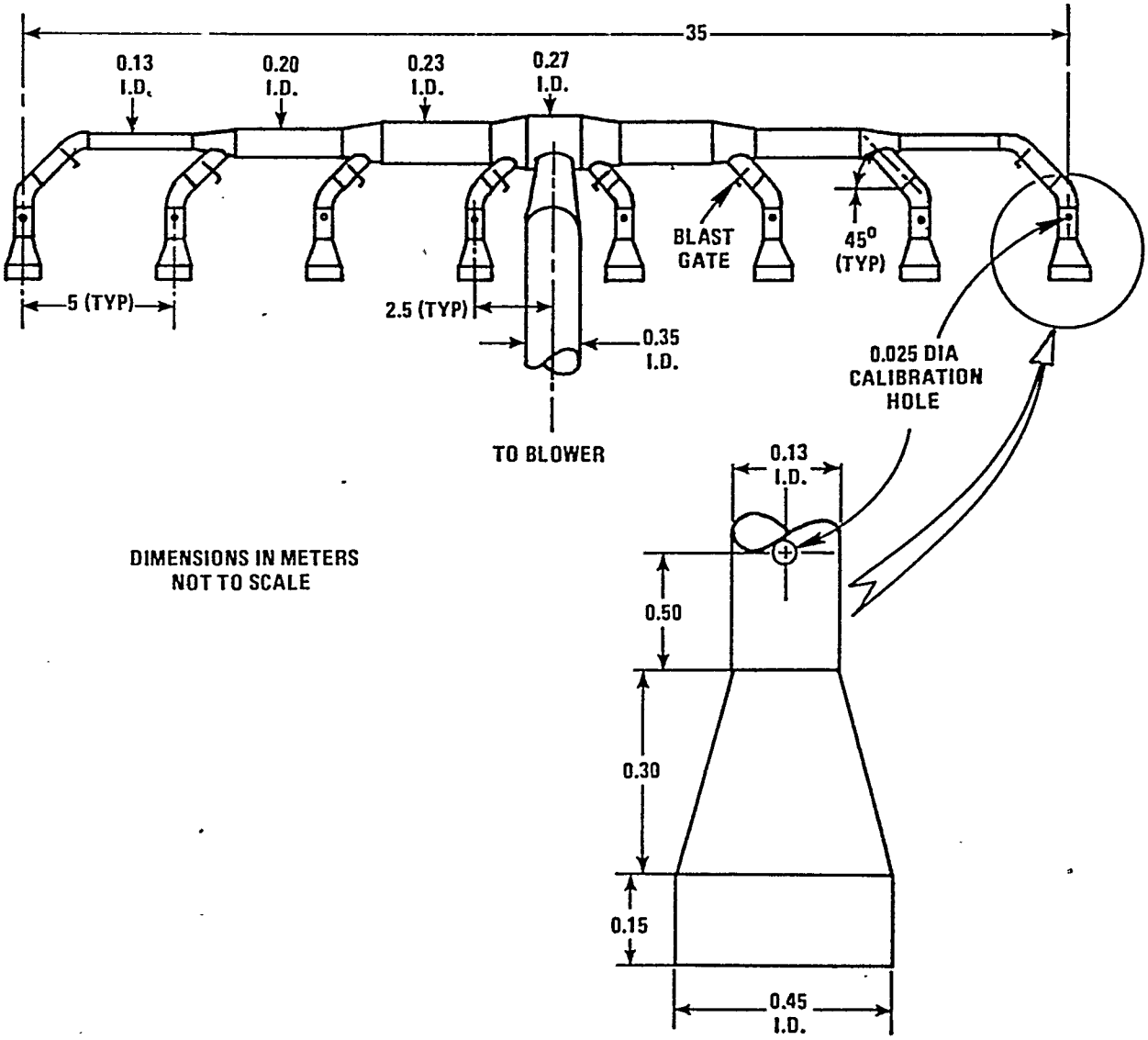

Figure 14-2. Sampling manifold and nozzles.

BILLING CODE 6560-01-C

The manifold shall be located in the immediate vicinity of one of the propeller anemometers (see Section 2.1.2.3) and as close as possible to the midsection of the potroom (or potroom segment). Avoid locating the manifold near the end of a potroom or in a section where the aluminum reduction pot arrangement is not typical of the rest of the potroom (or potroom segment). Center the sample nozzles in the throat of the roof monitor (see Figure 14–1). Construct all sample-exposed surfaces within the nozzles, manifold and sample duct of 316 stainless steel. Aluminum may be used if a new ductwork system is conditioned with fluoride-laden roof monitor air for a period of six weeks prior to initial testing. Other materials of construction may be used if it is demonstrated through comparative testing that there is no loss of flourides in the system. All connections in the ductwork shall be leak free.

Locate two sample ports in a vertical section of the duct between the roof monitor and exhaust fan. The sample ports shall be at least 10 duct diameters downstream and three diameters upstream from any flow disturbance such as a bend or contraction. The two sample ports shall be situated 90° apart. One of the sample ports shall be situated so that the duct can be traversed in the plane of the nearest upstream duct bend.

2.2.2 Exhaust fan. An industrial fan or blower shall be attached to the sample duct at ground level (see Figure 14–1). This exhaust fan shall have a capacity such that a large enough volume of air can be pulled through the ductwork to maintain an isokinetic sampling rate in all the sample nozzles for all flow rates normally encountered in the roof monitor.

The exhaust fan volumetric flow rate shall be adjustable so that the roof monitor air can be drawn isokinetically into the sample nozzles. This control of flow may be achieved by a damper on the inlet to the exhauster or by any other workable method.

2.3 Temperature measurement apparatus.

2.3.1 Thermocouple. Install a thermocouple in the roof monitor near the sample duct. The thermocouple shall conform to the specifications outlined in Section 2.3 of Method 2.

2.3.2 Signal transducer. Transducer, to change the thermocouple voltage output to a temperature readout.

2.3.3 Thermocouple wire. To reach from roof monitor to signal transducer and recorder.

2.3.4 Recorder. Suitable recorder to monitor the output from the thermocouple signal transducer.

2.4 Fluoride sampling train. Use the train described in Method 13A or 13B.

3. *Reagents.*

3.1 Sampling and analysis. Use reagents described in Method 13A or 13B.

4. *Calibration.*

4.1 Initial performance checks. Conduct these checks within 60 days prior to the first performance test.

4.1.1 Propeller anemometers. Anemometers which meet the specifications outlined in Section 2.1.1 need not be calibrated, provided that a reference performance curve relating anemometer signal output to air velocity (covering the velocity range of interest) is available from the manufacturer. For the purpose of this method, a "reference" performance curve is defined as one that has been derived from primary standard calibration data, with the anemometer mounted vertically. "Primary standard" data are obtainable by: (1) Direct calibration of one or more of the anemometers by the National Bureau of Standards (NBS); (2) NBS-traceable calibration; or (3) Calibration by direct measurement of fundamental parameters such as length and time (e.g., by moving the anemometers through still air at measured rates of speed, and recording the output signals). If a reference performance curve is not available from the manufacturer, such a curve shall be generated, using one of the three methods described as above. Conduct a performance-check as outlined in Section 4.1.1.1 through 4.1.1.3, below. Alternatively, the tester may use any other suitable method, subject to the approval of the Administrator, that takes into account the signal output, propeller condition and threshold velocity of the anemometer.

4.1.1.1 Check the signal output of the anemometer by using an accurate rpm generator (see Figure 14–3) or synchronous motors to spin the propeller shaft at each of the three rpm settings described in Section 2.1.1 above (specification No. 7), and measuring the output signal at each setting. If, at each setting, the output signal is within ± 5 percent of the manufacturer's value, the anemometer can be used. If the anemometer performance is unsatisfactory, the anemometer shall either be replaced or repaired.

4.1.1.2 Check the propeller condition, by visually inspecting the propeller, making note of any significant damage or warpage; damaged or deformed propellers shall be replaced.

4.1.1.3 Check the anemometer threshold velocity as follows: With the anemometer mounted as shown in Figure 14–4(A), fasten a known weight (a straight-pin will suffice) to the anemometer propeller at a fixed distance from the center of the propeller shaft. This will generate a known torque; for example, a 0.1 g weight, placed 10 cm from the center of the shaft, will generate a torque of 1.0 g-cm. If the known torque causes the propeller to rotate downward, approximately 90° [see Figure 14–4(B)], then the known torque is greater than or equal to the starting torque; if the propeller fails to rotate approximately 90°, the known torque is less than the starting torque. By trying different combinations of weight and distance, the starting torque of a particular anemometer can be satisfactorily estimated. Once an estimate of the starting torque has been obtained, the threshold velocity of the anemometer (for horizontal mounting) can be estimated from a graph such as Figure 14–5 (obtained from the manufacturer). If the horizontal threshold velocity is acceptable [<15 m/min (50 fpm), when this technique is used], the anemometer can be used. If the threshold velocity of an anemometer is found to be unacceptably high, the anemometer shall either be replaced or repaired.

BILLING CODE 6560-01-M

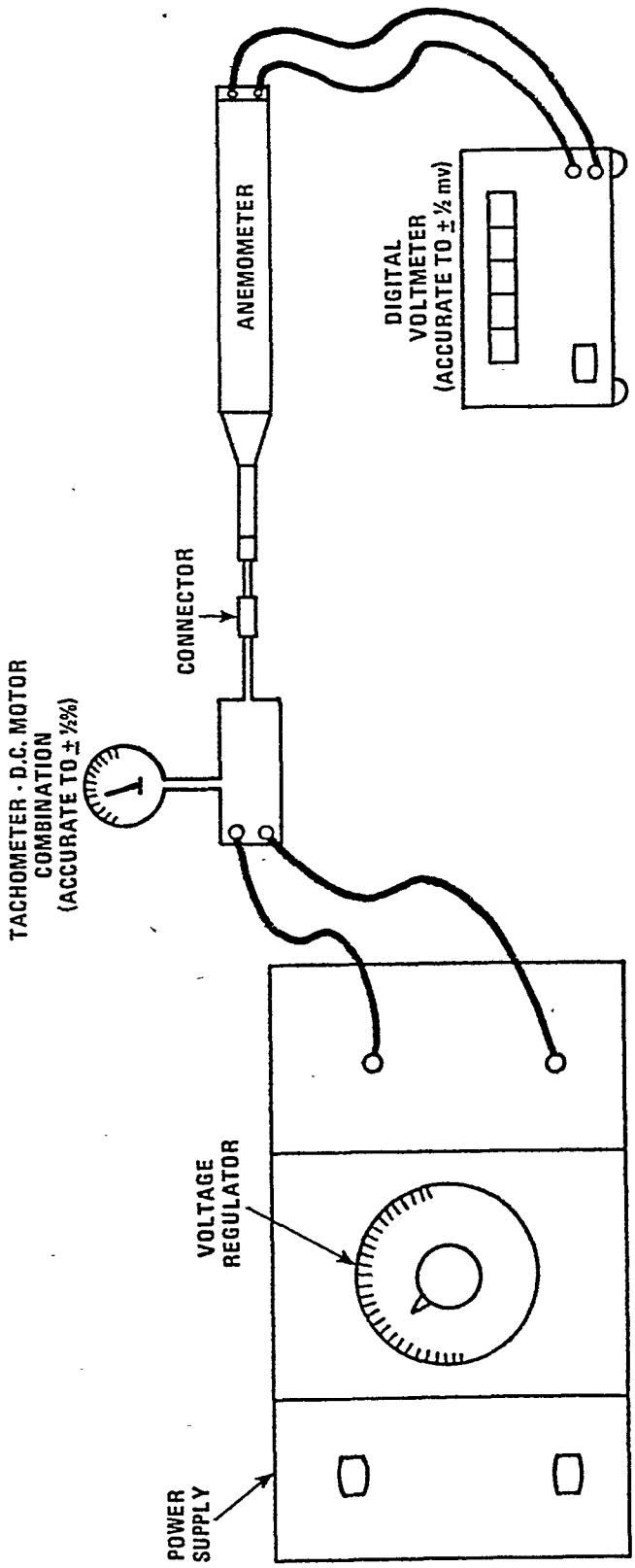

Figure 14-3. Typical RPM generator.

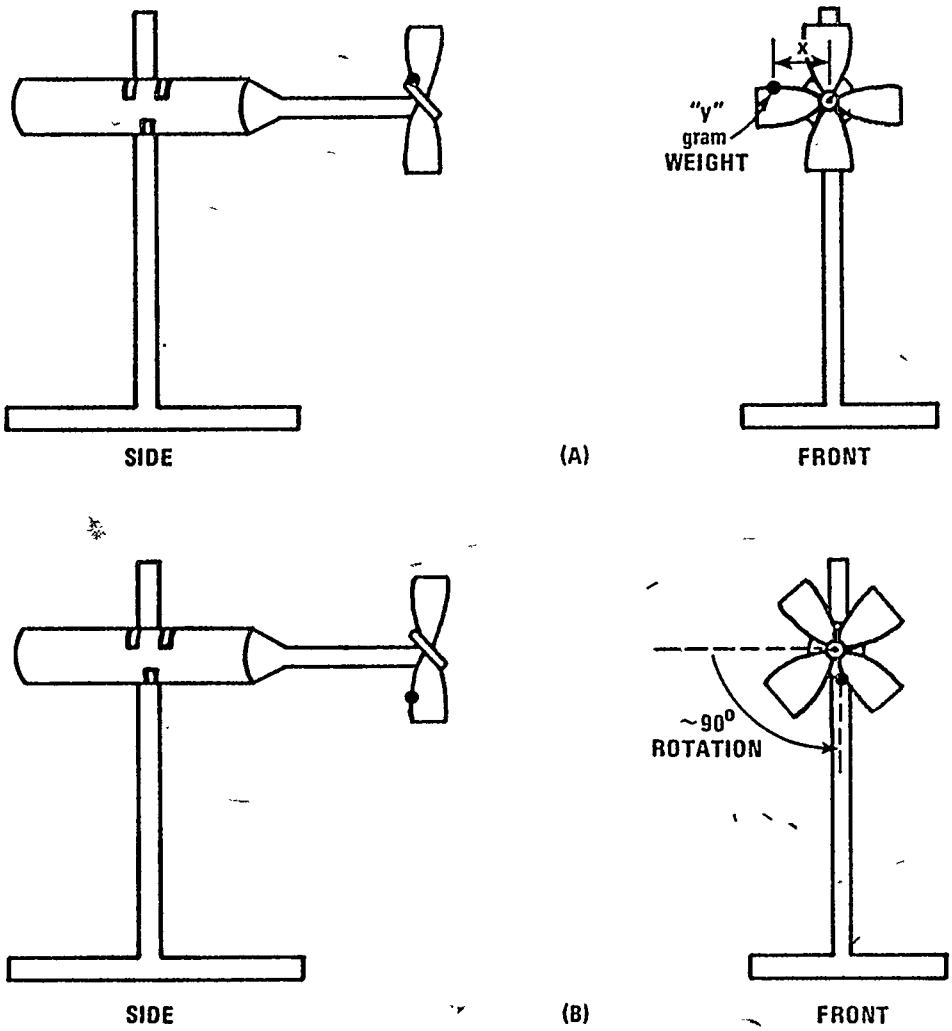

Figure 14-4. Check of anemometer starting torque. A "y" gram weight placed "x" centimeters from center of propeller shaft produces a torque of "xy" g-cm. The minimum torque which produces a 90° (approximately) rotation of the propeller is the "starting torque."

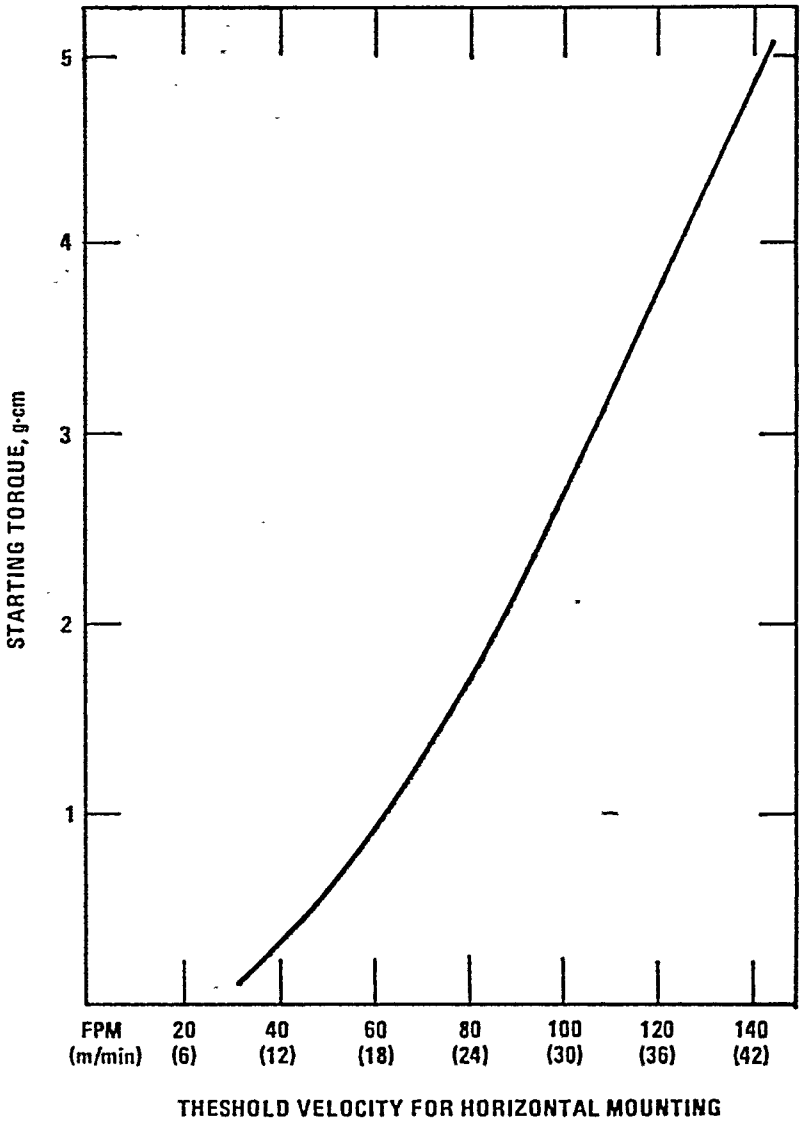

Figure 14-5. Typical curve of starting torque vs horizontal threshold velocity for propeller anemometers. Based on data obtained by R.M. Young Company, May, 1977.

BILLING CODE 6560-01-C

4.1.2 Thermocouple. Check the calibration of the thermocouple-potentiometer system, using the procedures outlined in Section 4.3 of Method 2, at temperatures of 0, 100, and 150°C. If the calibration is off by more than 5°C at any of the temperatures, repair or replace the system; otherwise, the system can be used.

4.1.3 Recorders and/or counters. Check the calibration of each recorder and/or counter (see Section 2.1.3) at a minimum of three points, approximately spanning the expected range of velocities. Use the calibration procedures recommended by the manufacturer, or other suitable procedures (subject to the approval of the Administrator). If a recorder or counter is found to be out of calibration, by an average amount greater than 5 percent for the three calibration points, replace or repair the system; otherwise, the system can be used.

4.1.4 Manifold Intake Nozzles. In order to balance the flow rates in the eight individual nozzles, proceed as follows: Adjust the exhaust fan to draw a volumetric flow rate (refer to Equation 14–1) such that the entrance velocity into each manifold nozzle approximates the average effluent velocity in the roof monitor. Measure the velocity of the air entering each nozzle by inserting a standard pitot tube into a 2.5 cm or less diameter hole (see Figure 14–2) located in the manifold between each blast gate (or valve) and nozzle. Note that a standard pitot tube is used, rather than a type S, to eliminate possible velocity measurement errors due to cross-section blockage in the small (0.13 m diameter) manifold leg ducts. The pitot tube tip shall be positioned at the center of each manifold leg duct. Take care to insure that there is no leakage around the pitot tube, which could affect the indicated velocity in the manifold leg. If the velocity of air being drawn into each nozzle is not the same, open or close each blast gate (or valve) until the velocity in each nozzle is the same. Fasten each blast gate (or valve) so that it will remain in this position and close the pitot port holes. This calibration shall be performed when the manifold system is installed. Alternatively, the manifold may be preassembled and the flow rates balanced on the ground, before being installed.

4.2 Periodical performance checks. Twelve months after their initial installation, check the calibration of the propeller anemometers, thermocouple-potentiometer system, and the recorders and/or counters as in Section 4.1. If the above systems pass the performance checks, (i.e., if no repair or replacement of any component is necessary), continue with the performance checks on a 12-month interval basis. However, if any of the above systems fail the performance checks, repair or replace the system(s) that failed and conduct the periodical performance checks on a 3-month interval basis, until sufficient information (consult with the Administrator) is obtained to establish a modified performance check schedule and calculation procedure.

Note.—If any of the above systems fail the initial performance checks, the data for the past year need not be recalculated.

5. *Procedure.*

5.1 Roof Monitor Velocity Determination.

5.1.1 Velocity estimate(s) for setting isokinetic flow. To assist in setting isokinetic flow in the manifold sample nozzles, the anticipated average velocity in the section of the roof monitor containing the sampling manifold shall be estimated prior to each test run. The tester may use any convenient means to make this estimate (e.g., the velocity indicated by the anemometer in the section of the roof monitor containing the sampling manifold may be continuously monitored during the 24-hour period prior to the test run).

If there is question as to whether a single estimate of average velocity is adequate for an entire test run (e.g., if velocities are anticipated to be significantly different during different potroom operations), the tester may opt to divide the test run into two or more "sub-runs," and to use a different estimated average velocity for each sub-run (see Section 5.3.2.2.)

5.1.2 Velocity determination during a test run. During the actual test run, record the velocity or volumetric flowrate readings of each propeller anemometer in the roof monitor. Readings shall be taken for each anemometer every 15 minutes or at shorter equal time intervals (or continuously).

5.2 Temperature recording. Record the temperature of the roof monitor every 2 hours during the test run.

5.3 Sampling.

5.3.1 Preliminary air flow in duct. During 24 hours preceding the test, turn on the exhaust fan and draw roof monitor air through the manifold duct to condition the ductwork. Adjust the fan to draw a volumetric flow through the duct such that the velocity of gas entering the manifold nozzles approximates the average velocity of the air exiting the roof monitor in the vicinity of the sampling manifold.

5.3.2 Manifold isokinetic sample rate adjustment(s).

5.3.2.1 Initial adjustment. Prior to the test run (or first sub-run, if applicable; see Section 5.1.1 and 5.3.2.2), adjust the fan to provide the necessary volumetric flowrate in the sampling duct, so that air enters the manifold sample nozzles at a velocity equal to the appropriate estimated average velocity determined under Section 5.1.1. Equation 14–1 gives the correct stream velocity needed in the duct at the sampling location, in order for sample gas to be drawn isokinetically into the manifold nozzles. Next, verify that the correct stream velocity has been achieved, by performing a pitot tube traverse of the sample duct (using either a standard or type S pitot tube); use the procedure outlined in Method 2.

$$v_d = \frac{8\,(D_n)^2}{(D_d)^2}\,(v_m)\,\frac{1\ \text{min}}{60\ \text{sec}} \qquad \text{(Equation 14–1)}$$

Where:

v_d = Desired velocity in duct at sampling location, m/sec.

D_n = Diameter of a roof monitor manifold nozzle, m.

D_d = Diameter of duct at sampling location, m.

v_m = Average velocity of the air stream in the roof monitor, m/min, as determined under Section 5.1.1.

5.3.2.2 Adjustments during run. If the test run is divided into two or more "sub-runs" (see Section 5.1.1), additional isokinetic rate adjustment(s) may become necessary during the run. Any such adjustment shall be made just before the start of a sub-run, using the procedure outlined in Section 5.3.2.1 above.

Note.—Isokinetic rate adjustments are not permissible during a sub-run.

5.3.3 Sample train operation. Sample the duct using the standard fluoride train and methods described in Methods 13A and 13B. Determine the number and location of the sampling points in accordance with Method 1. A single train shall be used for the entire sampling run. Alternatively, if two or more sub-runs are performed, a separate train may be used for each sub-run; note, however, that if this option is chosen, the area of the sampling nozzle shall be the same (± 2 percent) for each train. If the test run is divided into sub-runs, a complete traverse of the duct shall be performed during each sub-run.

5.3.4 Time per run. Each test run shall last 8 hours or more; if more than one run is to be performed, all runs shall be of approximately the same (± 10 percent) length. If question exists as to the representativeness of an 8-hour test, a longer period should be selected. Conduct each run during a period when all normal operations are performed underneath the sampling manifold. For most recently-constructed plants, 24 hours are required for all potroom operations and events to occur in the area beneath the sampling manifold. During the test period, all pots in the potroom group shall be operated such that emissions are representative of normal operating conditions in the potroom group.

5.3.5 Sample recovery. Use the sample recovery procedure described in Method 13A or 13B.

5.4 Analysis. Use the analysis procedures described in Method 13A or 13B.

6. *Calculations.*

6.1 Isokinetic sampling check.

6.1.1 Calculate the mean velocity (v_m) for the sampling run, as measured by the anemometer in the section of the roof monitor containing the sampling manifold. If two or more sub-runs have been performed, the tester may opt to calculate the mean velocity for each sub-run.

6.1.2 Using Equation 14–1, calculate the expected average velocity (v_d) in the sampling duct, corresponding to each value of v_m obtained under Section 6.1.1.

6.1.3 Calculate the actual average velocity (v_s) in the sampling duct for each run or sub-run, according to Equation 2–9 of Method 2, and using data obtained from Method 13.

6.1.4 Express each value v_s from Section 6.1.3 as a percentage of the corresponding v_d value from Section 6.1.2.

6.1.4.1 If v_s is less than or equal to 120 percent of v_d, the results are acceptable (note that in cases where the above calculations have been performed for each sub-run, the results are acceptable if the average percentage for all sub-runs is less than or equal to 120 percent).

6.1.4.2 If v_s is more than 120 percent of v_d, multiply the reported emission rate by the following factor.

$$1 + \frac{(100\, v_s/v_d) - 120}{200}$$

6.2 Average velocity of roof monitor gases. Calculate the average roof monitor velocity using all the velocity or volumetric flow readings from Section 5.1.2.

6.3 Roof monitor temperature. Calculate the mean value of the temperatures recorded in Section 5.2.

6.4 Concentration of fluorides in roof monitor air (in mg F/m³).

6.4.1 If a single sampling train was used throughout the run, calculate the average fluoride concentration for the roof monitor using Equation 13A-2 of Method 13A.

6.4.2 If two or more sampling trains were used (i.e., one per sub-run), calculate the average fluoride concentration for the run, as follows:

$$\bar{C}_s = \frac{\sum_{i=1}^{n} (F_t)_i}{\sum_{i=1}^{n} (V_{m(std)})_i} \qquad \text{(Equation 14-2)}$$

Where:

C_s = Average fluoride concentration in roof monitor air, mg F/dscm.

F_t = Total fluoride mass collected during a particular sub-run, mg F (from Equation 13A-1 of Method 13A or Equation 13B-1 of Method 13B).

$V_{m(std)}$ = Total volume of sample gas passing through the dry gas meter during a particular sub-run, dscm (see Equation 5-1 of Method 5).

n = Total number of sub-runs.

6.5 Average volumetric flow from the roof monitor of the potroom(s) (or potroom segment(s)) containing the anemometers is given in Equation 14-3.

$$Q_m = \frac{v_{mt}(A)\,(M_d)\,P_m(293\,^\circ K)}{(T_m + 273^\circ)\,(760\ mm\ Hg)} \qquad \text{(Equation 14-3)}$$

Where:

Q_m = Average volumetric flow from roof monitor at standard conditions on a dry basis, m³/min.

A = Roof monitor open area, m².

v_{mt} = Average velocity of air in the roof monitor, m/min, from Section 6.2.

P_m = Pressure in the roof monitor; equal to barometric pressure for this application, mm Hg.

T_m = Roof monitor temperature, °C, from Section 6.3.

M_d = Mole fraction of dry gas, which is given by:

$$M_d = (1 - B_{ws})$$

Note.—B_{ws} is the proportion by volume of water vapor in the gas stream, from Equation 5-3, Method 5.

7. *Bibliography.*

1. Shigehara, R. T., A guideline for Evaluating Compliance Test Results (Isokinetic Sampling Rate Criterion). U.S. Environmental Protection Agency, Emission Measurement Branch, Research Triangle Park, North Carolina, August 1977.

[FR Doc. 80-19516 Filed 6-27-80; 8:45 am]

BILLING CODE 6560-01-M

federal register

Monday
June 30, 1980

Part VIII

Department of Justice

Bureau of Prisons

Control, Custody, Care, Treatment, and Instruction of Prison Inmates

DEPARTMENT OF JUSTICE

Bureau of Prisons

28 CFR Parts 513, 522, 540, 570, and 571

Control, Custody, Care, Treatment, and Instruction of Inmates

AGENCY: Bureau of Prisons, Justice.

ACTION: Final rules with comments invited on interim § 540.20(b).

SUMMARY: This document contains final rules relating to the control, custody, care, treatment, and instruction of inmates. Included are final rules on (1) Visiting Regulations; (2) Production or Disclosure of Material or Information; FBI Identification Records; FBI Criminal History Records; (3) Reimbursement by Inmates Confined in Federal Facilities Participating in Community Employment Programs; (4) Intake Screening; (5) Pre-Release Program; and (6) Correspondence. The document is intended to provide the public notice of the rules in this area, not just changes from prior policy.

DATE: Effective date: These rules become effective August 1, 1980, except for interim § 540.20(b) which becomes effective June 30, 1980. Public comments on § 540.20(b) must be received on or before September 1, 1980.

ADDRESS: Office of General Counsel, Bureau of Prisons, Room 910, 320 1st Street, N.W., Washington, D.C. 20534.

FOR FURTHER INFORMATION CONTACT: Mike Pearlman, Office of General Counsel, Bureau of Prisons, phone 202/724/3062.

SUPPLEMENTARY INFORMATION: In this document the Bureau of Prisons is publishing final rules relating to the following:

(1) Visiting Regulations;

(2) Production or Disclosure of Material or Information: FBI Identification Records; FBI Criminal History Records;

(3) Reimbursement by Inmates Confined in Federal Facilities Participating in Community Employment Programs;

(4) Intake Screening;

(5) Pre-Release Program; and

(6) Correspondence.

Each subject has been published in the **Federal Register** previously as a proposed or interim rule. Final rule (1) was published as a proposed rule May 23, 1977 (at 42 FR 26337 et seq.). Final rules (2)-(5) were published as proposed rules January 12, 1979 (at 44 FR 2978 et seq.). Final rule (6) was published as an interim rule June 19, 1979 (at 44 FR 35956 et seq.).

Interested persons were invited to submit comments on the proposed and interim rules and public comments were received from various sources. On the basis of these comments and internal staff review of Bureau policies, some changes have been made. As a result of such review, § 540.20(b) of the rule on Correspondence is significantly revised and is published in this document as an interim rule. As published in the June 19, 1979 **Federal Register**, § 540.20(b) provided that when an inmate is without funds or sufficient postage and wishes to mail legal mail or Administrative Remedy forms, such mail is sent at government expense. There was abuse of this free mailing provision. The language of this section for example allowed an inmate at one institution to receive during a one-month period 600 free stamps for legal mail and/or Administrative Remedy filings. In other cases, inmates depleted their commissary accounts by sending their money out of the institution, obtained free postage, and then replenished their accounts by having monies sent back into the institution. Such practices misuse public monies. They also create a situation where an inmate without funds or sufficient postage could be coerced into obtaining free postage for another inmate's legal mail or Administrative Remedy filings. To prevent these and similar abuses, § 540.20(b) is revised and republished as an interim rule. It authorizes the Warden to place limitations on the amount of free postage provided an inmate for legal mail or Administrative Remedy filings. To eliminate the likelihood of continued misuse of public monies or unnecessary pressure being placed on inmates without funds or sufficient postage as a result of publication of § 540.20(b) as a proposed rule, the Bureau of Prisons finds good cause under 5 USC 553(d)(3) to impose this rule without a delay in the effective date. Pulic comment on this approach or submission of an alternative approach to eliminate such abuse is invited. Comments received on interim § 540.20(b) on or before September 1, 1980 will be considered before final action is taken.

Members of the public may submit further comments concerning the final rules by writing the previously cited address. These comments will be considered, but will receive no further response in the **Federal Register**. Public comments which were received and changes which were made are discussed below.

Summary of Changes/Other Comments

I. Part 513, Subpart B—Production or Disclosure of Material or Information: FBI Identification Records; FBI Criminal History Records

1. A commenter suggested that the inmate's FBI identification record and criminal history record be either translated or supplied in the inmate's language. The Bureau of Prisons is not able to accommodate this request, as the applicable documents are the property of the FBI, not the Bureau of Prisons. Bureau staff may, upon the inmate's request, discuss the FBI information with the inmate.

2. Comments that the proposed rules fail to state the inmate's right to receive a copy of his FBI identificaion and/or NCIC/CCH records is addressed in final § 513.12(b) by substitution of the word "shall" for "may". The commenter suggested that § 513.10 needed a similar revision. This section, however, addresses FBI authorization for the Bureau of Prisons to provide the information, not the inmate's request for it. Final §§ 513.11(b) and 513.12(b) clearly indicate the inmate's right to a copy of his FBI Identification Record and/or NCIC/CCH Record. The phrase "along with a copy of the Bureau of Prisons Program Statement governing disclosure of the FBI identification record" is deleted from final § 513.11(b) as publication in the **Federal Register** gives notice of Bureau policy. An inmate may obtain a copy of the Program Statement by filing a Freedom of Information request.

3. Section 513.12(c) is amended to read "Staff shall honor only one such request per inmate per month." This language recognizes the inmate's right to the information, while acknowledging physical limitations of the communications equipment to handle unlimited requests. A commenter suggested that an inmate be allowed to resubmit the request where the filing of a request is delayed, and no reasons for the delay are received. We have no objection to resubmission, and the rule provides for monthly requests. Where an inmate is dissatisfied with the lack of a response, a complaint may be filed through the Administrative Remedy Procedure.

4. Comments were received on access to Bureau of Prisons records. This subject was published as a proposed rule October 29, 1979 in the **Federal Register** (See 44 FR 62252 et seq.).

II. Part 522 Subpart C—Intake Screening

1. Section 522.20—§ 522.20 is amended to state that newly arrived inmates are

screened to ensure that Bureau health, safety, and security standards are met.

2. Section 522.21—Final § 522.21(a) excludes camps and other satellite facilities from the requirement that newly arrived inmates be kept in detention pending social interview and clearance by the medical department. These institutions do not ordinarily have detention units, as such housing is provided by other Federal institutions. Camps and satellite facilities, however, are required to conduct intake interviews in a manner consistent with the intent of the rule on Intake Screening.

Proposed § 522.21(a)(2) becomes final § 522.21(a)(1). The final rule substitutes the phrase "immediately upon an inmate's arrival," for "Within 24 hours after an inmate's arrival" as the social interview is to occur at the earliest opportunity. Proposed § 522.21(a)(1) becomes final § 522.21(a)(2). The final rule deletes the phrase "Part 549 Subpart B," inserting the more specific language "Bureau of Prisons' medical procedures". The final rule adds the phrase "or for restricting temporary work assignments" as a further purpose of the medical screening.

Section 522.21(a)(3) is revised to read "place recorded results of the intake medical screening * * *" A commenter to § 522.21(a)(3) stated that if the inmate's Central File is available to staff generally, raw data from the medical screening or social interview should not be placed in this file. We are uncertain what the commenter considers "raw data" of the social interview. Handwritten notes of the interviewer are not typically placed in the file. As for the medical screening, the Central File contains results of the intake medical screening, not specific medical data nor the medical chart.

III. Part 540, Subpart A—General; Subpart B—Correspondence

Summary of Changes

1. Section 540.2—Final § 540.2(b)(1) is amended to concisely describe what is meant by the phrase "general circulation newspaper in the community in which it is published." The intent of the section is unchanged. § 540.2(c) is amended to state that special mail may be sent to "other Federal and State law enforcement offices" as opposed to the interim phrase "other law enforcement officers". § 540.2(c) is further amended to state that mail received from U.S. Attorneys is to be handled as "special mail". A similar recognition was added to final § 540.11(b).

2. Section 540.11—Final § 540.11(b) is revised to state that the notice of institution rules for handling of inmate mail is to be read by or to the inmate. The notice is intended as an advisement of options to the inmate. To clarify this intent, the notice states that where the inmate refuses to sign, the mail is delivered to the inmate and is subject to being opened and read. This modification recognizes the Bureau's authority to open mail, without regard to whether the inmate specifically authorizes it. This shift in the effect of the inmate's silence, or refusal to sign, reflects commenters' suggestions.

3. Section 540.14—Final § 540.14(c)(iii) is amended to require staff to advise the inmate of the opportunity to appeal the decision under the Administrative Remedy Procedure.

4. Section 540.17—§ 540.17(b) is amended to specifically state that incoming special mail must have both adequate identification and the special mail marking described in § 540.17(a). Reference in interim § 540.17(c) to the Warden establishing special mail boxes is deleted from the final rule as this is an internal suggestion. Interim § 540.17(d) required each institution to make a stamp. This language is implementing in nature and is deleted from the final rule. Substituted is the requirement that the indicated statement is to be stamped directly on the backside of the inmate's outgoing special mail.

5. Section 540.18—Final § 540.18(a) is amended to specify that staff mark each envelope of incoming mail (to include mail from courts or attorneys). Subsection (b) is amended to require the envelope containing attorney mail be marked "Special Mail—Open only in the presence of the inmate". As specified in the interim rule, legal mail was to be opened in accordance with special mail procedures. The notation "special mail * * *" is a requirement for recognition and handling as special mail. Final § 540.18(c) specifies that the Warden shall provide "written" notice to the attorney and to the inmate affected by denial of an attorney's correspondence rights or privileges.

6. Section 540.20—Final § 540.20(a)(1)-(3) contains language previously reflected in interim § 540.20(a). For clarity, the final rule separates into specific entries the language contained in the interim rule.

Due to abuses of interim § 540.20(b), which provided for mailing legal mail and Administrative Remedy filings at government expense for an inmate who is without funds or sufficient postage, this section is revised and again published as an interim rule. New § 540.20(b) states that an inmate who has neither funds not sufficient postage and who wishes to mail legal mail (this includes courts and attorneys) or Administrative Remedy filings will be provided the postage for such mailing. New § 540.20(b) authorizes the Warden to place limitations on the amount of free postage provided an inmate for legal mail and Administrative Remedy filings. The Bureau of Prisons Program Statement on Correspondence, which is simultaneously issued, gives the guidelines for dealing with different types of abuses which have occurred. It calls for providing an inmate who has neither funds nor sufficient postage with up to five postage stamps (first-class, domestic, one ounce mailings) or the equivalent each week, for legal mail or Administrative Remedy filings. The Program Statement authorizes the Warden to require that an inmate pay for additional postage stamps, chargeable against the inmate's following month's commissary account when the inmate has funds, or, when the inmate is without funds, chargeable against the inmate's account at such time as funds are received. This last situation applies to the inmate who has, for at least two separate months, depleted his commissary account, obtained government postage, and then restored money to his account.

As a result of the above revisions, the last sentence of interim § 540.20(b) becomes final § 540.20(c). Interim § 540.20 (c) and (d) become final § 540.20 (d) and (e). Section 540.20 (f) and (g) are new and address both comments received and Bureau practice. Comments suggested that inmates be allowed to receive stamps from outside the institution and that incoming letters be allowed to contain a stamped self-addressed envelope. Both approaches, however, lend themselves to the introduction of contraband and § 540.20(f) states that inmates may not receive stamps or stamped envelopes from any source other than allocation or issuance from the institution or purchase from the commissary. Section 540.20(g) requires an inmate to sign for stamps received. This procedure contributes to the maintenance of institution security and good order, as it reduces the possibility, cited in a comment, for the development of a "Black Market".

7. Section 540.22—Interim § 540.22 (a) and (b) are revised. The final rule stipulates that the Bureau of Prisons shall make available to an inmate being transferred or released U.S. Postal Service Change of Address cards. Internal staff instructions require that these cards be readily available at several locations in each institution (Receiving and Discharge, Mail Room, Record Office, etc.). Deleted is the

interim rule requirement that the inmate sign a receipt for these cards and that staff maintain a copy of the forwarding address. The final rule recognizes it is the inmate's responsibility to make the appropriate notifications, but the Bureau of Prisons will pay postage for mailing a Change of Address card to the U.S. Postal Service (§ 540.22(c)). Such notification to the Postal Service ensures that incoming letters to the inmate will be forwarded to the appropriate address.

Section 540.22(d) specifies that, except where the inmate is released temporarily on writ, all mail for a released or transferred inmate is returned to the U.S. Postal Service for disposition in accordance with U.S. Postal Regulations. Final § 540.22(e) describes options available to the inmate who is released temporarily on writ. The final rule is intended to more clearly recognize the responsibility of the U.S. Postal Service to change addresses and forward mail.

Other Comments

1. Section 540.2—A commenter objected to the Bureau's definition of "representatives of the news media" (§ 540.2(b)), stating it excludes reporters and representatives of newspapers, magazines, etc., with limited circulation, resources, and focus. The commenter recommends the phrase "person who gathers information". § 540.62(e) (See 28 CFR, Chapter V), Contact with News Media, allows interviews on special permission of the Warden by persons not specifically included in § 540.2(b).

Comments to § 540.2(c) suggested the Bureau provide "special mail" recognition to all federal, state, and local government officials or agencies, as no legitimate security interest exists with respect to outgoing "special mail," and the minimal risk of abuse should not be used to support a blanket open-and-read policy with respect to letters received from government agencies. The commenter believes other rule sections minimize potential abuse of special mail. Other rule sections are intended to reduce the risk of serious contraband and escape plots being sent through the mail. However, Bureau of Prisons responsibility is not fulfilled solely by these sections. The designation of specific persons and agencies for special mail recognition further restricts the potential for abuse and is seen as compatible with the Bureau of Prisons' responsibility to maintain security and good order within its institutions.

A suggestion that § 540.2(c) be amended to allow an inmate's first contact with a legal organization to be sent directly to the organization, with subsequent letters sent to the attorney or attorney representative, is impractical since there is no realistic way for the Bureau to know when an inmate makes the initial contact. A suggestion that interested organizations be allowed to pre-register for "special mail" recognition does not adequately address the Bureau's concern on potential abuse of special mail, and would require increased recordkeeping, without apparent benefit.

2. Section 540.11—Comments on § 540.11(b) generally objected to the inmate waiver, saying it violates various amendments, that it may cause an inmate mental harm not to receive mail, that it is superfluous and unnecessary, and that the waiver as such gives the Bureau the right to use "alleged information in disciplinary proceedings and in alleged criminal prosecutions." As stated in the "Summary of Changes", the notice form has been revised to better reflect the Bureau's rules for handling inmate mail, which includes the right of the Bureau to open and, in some instances, read all mail addressed to the inmate. It provides the inmate the additional option of choosing whether he wants his general correspondence returned unopened to the Postal Service. There is no intent, as one commenter alleged, to humiliate and degrade the inmate. Neither is there an intent to use "alleged information" in disciplinary proceedings. If the correspondence includes plans for or discussion of commission of a crime or evidence of a crime, the correspondence is referred to appropriate law enforcement authorities for their review and disposition. We do not consider the notice to violate any of the cited amendments, but see it as an advisement of options to the inmate. We believe the reworded form meets many concerns of the commenters and avoids any possible harm to inmates.

A comment on § 540.11(d) objected to placement of the inmate's register number on the envelope. The rule requires an inmate to place his name on the outgoing envelope, not the register number. We note, however, that the register number allows easier identification of correspondence. This is especially true where inmates of the same name reside in an institution.

3. Section 540.12—A comment suggested that the final rule allow non-inmates to file complaints when the person has reason to believe his or her own First Amendment rights were violated by prison personnel. § 540.12 specifies that the Warden notify the sender in writing of the rejection of correspondence and the reasons for the rejection. The Warden is to give notice that the sender may appeal the rejection. The Bureau accepts, investigates, and responds to complaints from individuals in the community. A second comment called for the Bureau to develop a means to ensure that notification of rejection occurs. § 540.12 provides specific notification procedures. The Bureau staff adheres to these procedures. Publication of the correspondence rule provides the public with awareness of the rejection and notification requirements.

4. Section 540.13—Comments to § 540.13(d) objected to the rule that outgoing mail may not be sealed, and may be read and inspected, in Security Levels 4, 5, and 6 institutions and in administrative institutions. Comments claim this is a violation of the 1st, 4th, 9th, and 13th Amendments, that it restricts the inmate's right to privacy, that it "chills and retards" the inmate's right to freely correspond even to the point of being critical of Bureau officials and/or policies, that it is an added burden on staff, that it will result in increased costs, and that it has not been shown essential to promote the security and orderly operation of the institution. A commenter cited some State systems which retain the authority to open and read mail when there is a "probable cause" to believe abuses exist. As further support, one comment cited Commission on Accreditation Standard 4343 (requiring clear and convincing evidence). The commenter considers this concept plus the availability of other sanctions for demonstrated abuses to provide sufficient protection of the Bureau's legitimate security interests. The commenter correctly states that the Bureau for a period of time did allow all outgoing correspondence to be sealed. The commenter incorrectly claims this practice caused little untoward effect, saying the possibility of a few instances of "escape and smuggling must be considered 'de minimus'." Our experience has shown that contraband and escape plots are sent through the mail. Knowing the mail may be inspected acts as a deterrent to its improper use. We do not consider this inconsequential, and are appealing the language of Standard 4343. While no need presently exists to require all outgoing mail be unsealed, a need for inspection does exist in the more secure institutions, where the risk of such activities as escape plots and introduction of contraband poses a danger to the security and good order of the institution and to proper protection of the public. § 540.13 addresses this concern, and subsection (e) provides reasons for rejection. Criticism of

Bureau officials or policies is not a reason to censor or reject correspondence. There is no intent to "chill" the inmate's right to freely correspond or to unduly restrict privacy. Rather, the provision is necessary based on the substantial government interest of institution security and order. There is no absolute right to correspond, to communicate, or to enjoy privacy; in prison, those rights are necessarily circumscribed for legitimate correctional concerns, particularly security. As to the comment alleging added staff burden and increased costs, existing staff have been able to absorb this function without increased cost. It is true that additional staff time is required, but this is used proportionately according to the security risk presented.

Comments on § 540.13(e) objected to the censorship criteria as overbroad and not narrowly limited to restrictions necessary to ensure the order, discipline, and security of the institution. A commenter suggested that it is not the Bureau's job to police postal regulations (§ 540.13(e)(1)) or, in the alternative, the Bureau should ensure that inmates receive copies of applicable postal regulations. It is the responsibility of every government agency to refuse to forward correspondence which is nonmailable under law or postal regulations. It is hardly plausible to argue that inmates should not be warned of such regulations. Each institution mail room has available for inmate review a copy of postal regulations (39 CFR). This makes them at least as easy for inmates to review as they are for the general public. A comment that subsection (e)(2) violates the First Amendment rights of an individual, because it allows rejection of correspondence for violation of institutional rules even where there exists no federal statute or presents no danger to the order or discipline of the institution, misinterprets the basis for the rule. The rule's intent is to ensure institution security and good order, by preventing violations of institution regulations. That is a legitimate concern of the agency. Discussion of homosexuality (posited by one commenter) is not a violation of institutional rules unless the discussion, for example, encourages prohibited acts in confinement. A comment that subsection (e)(3) needs clarification on what constitutes a "prisoner's business" is unnecessary as the phrase "direction of an inmate's business" is clear. Other Bureau procedures address the commenter's concern and recognize the importance of helping an individual receive post-release opportunities for employment, as well as vocational training. Subsection (e)(4), citing clear harassment of a member of the public, including invasion of privacy, was seen by a commenter as overbroad, and as violating the *Martinez* standard for correspondence. The commenter suggested that this subsection be eliminated. The Bureau disagrees, and believes protection of the public is a legitimate function of the Bureau. Although its frequent application is not anticipated, it is necessary, for example, where the inmate is writing a young child and the child's parents request the correspondence be stopped.

5. Section 540.14—A commenter believes the use of a restricted list is far too broad "in its range of sanctions". These regulations were drafted in broad language to give Wardens maximum discretion within constitutional boundaries. It is not possible to clearly delineate every situation which might justify placing an inmate on restricted general correspondence. A commenter said that the criteria section is contrary to *Martinez*, stating that the government interest in subsection (a)(4) and (5) is adequately protected by § 540.13(e). The Bureau believes it warranted to retain these sections as individual categories, to provide added specificity. Comments that § 540.14(a)(2), (3), (6), and (7) are unrelated to use of the mail, further no substantial government interest, and are too vague for enforcement, and therefore should be deleted, have been considered and rejected. These provisions serve a substantive government interest as they are necessary to help preserve the security, discipline, and good order of the institution, and to protect the public. A comment that mail rarely presents a security risk, as it is a simple process to check for contraband, does not acknowledge that security risks may be posed other than by the simple inclusion of physical contraband. For example, discussion of escape plots or means to commit illegal activities can pose a threat to the security of the institution. Other comments suggested that the list of approved correspondents was contrary to the *Martinez* requirement that regulations be no broader than necessary to protect substantial correctional interests, since the rule prohibits correspondence with persons who have violated no law. The commenter suggested that appropriate action against correspondence which violates a federal statute or presents a danger to the institution is to reject the letter and to utilize sanctions available for violation of institutional rules. The restricted list identifies persons with whom an inmate may immediately correspond. This list may be supplemented as specified within the rule, and special purpose letters may be allowed. The relationship of the correspondent categories to the restricted correspondence criteria is considered ample and necessary to protect the Bureau's interests.

6. Section 540.16—A comment that the interim rule restricts social contacts or may deprive an inmate of access to the court misreads the intent of the rule and misjudges its effects. The rule authorizes correspondence between inmates in specified situations and allows the Warden to approve additional correspondence when warranted by the circumstances. While the commenter questions the need for any restriction, based on the provisions of § 540.13(b) and (d), the Bureau considers this constraint necessary to ensure institution security and good order. Finally, the commenter believes that the rule further limits persons in another institution with whom the inmate may correspond, stating that the "close relatives" of the proposed rule become "immediate family" in the interim rule. Although immediate family connotes a smaller group than close relatives, it is also true that the final rule authorizes the Warden to expand those inmates with whom another inmate may correspond. In addition, the final rule removes the proposed rule requirement of a relationship between the confined inmates prior to commitment and an acknowledgement that the relationship is beneficial.

7. Section 540.17–18—Comments objected that enclosures in attorney-client correspondence, as well as in special mail, are subject to staff review for qualification as special mail. The commenter favored the attorney-client privilege being extended to all written matter enclosed in attorney-client correspondence and treated in the same manner as the attorney letter. The commenter stated that the correctional officer is not trained or capable to determine what constitutes attorney-client privilege, and that granting this power may lead to unnecessary tension and conflict. The rule is intended to prevent items of general correspondence (for example, a letter from a friend) or of impermissible content from being enclosed in correspondence provided special mail status. We expect that enclosures in special mail will clearly and quickly evidence special mail qualifications—for example, a court decision or legal form enclosed in attorney correspondence, in which case staff will not read the enclosure. The requirement that special mail be opened

in the inmate's presence should help resolve those few occasions where the enclosure is not clearly identifiable as special mail. A comment that the interim rule broadens the "qualification process" from legal to all special mail fails to recognize legal mail as special mail and the applicability of the same procedures applying to both.

8. Section 540.19—A comment on § 540.19(c) claims that the provision is "patently unlawful", that it flies in the face of precedent and standards in the area, that the guidelines are more rigorous than those for rejection of general correspondence, and that the rule is not compatible with Accreditation Standard 4307 (inmates receiving reasonable access to the general public through the communications media, subject only to the limitations necessary to maintain institutional order and security). The rule does not restrict contact with the news media. § 540.60 (See Chapter V, 28 CFR) states, in part, "The Bureau of Prisons recognizes the desirability of establishing a policy that affords the public information about its operations via the news media." § 540.19(c) is not contrary to this statement. It does not restrict the right of the press to have access to an inmate, nor does it impose guidelines more stringent than those for general correspondence. The Commission on Accreditation as part of their review of several Bureau institutions has determined that Standard 4307 has been met.

9. Section 540.20—The majority of comments on § 540.20–540.20(a) concerned the provision for inmates to receive five free stamps per month with additional postage paid by the inmate. Some comments opposed requiring inmates to pay postage, others objected to the Bureau providing free postage, another suggested 12 stamps per month be provided, and still other comments suggested that the interim rule was a reasonable modification of previous practice.

Comments opposed to the rule claimed inmates; especially poor inmates, could not afford to pay postage, that five stamps are not enough, that the restriction retards the right of an inmate to maintain contact with family, friends, and others, that it may contribute to the break-up of the family, that it will affect inmate morale, and that it will discourage inmates from communicating their complaints and grievances. Other comments said the policy may be counterproductive to the Bureau's efforts to return to the community productive and law-abiding persons, that it will not lead to appreciable financial savings, and that less restrictive alternatives exist for persons who abuse the policy. One commenter believed that the Bureau's interim rule has all but totally ignored the Bureau's own long-standing philosophy on the value of correspondence as well as the teachings of the Supreme Court in *Procunier* v. *Martinez*.

Other comments expressed contrasting views. One commenter said he could not understand why the Federal Government provided free postage and writing materials to inmates able to pay postage and that he did not want his tax money used for this. The commenter suggested that providing free postage and writing materials to convicted felons, but not to free world citizens, may violate the Equal Protection clause of the United States Constitution. Comments also expressed dissatisfaction with the Bureau paying any postage, stating this should be paid by the inmate.

The Bureau considers the language of § 540.20(a) a reasonable modification. While the rule recognizes and alleviates the significant cost in providing inmates free, unlimited postage, the rule is not intended to, nor should it, interfere with or inhibit communication between inmates and their families and friends, nor should it have a negative effect on inmate morale. The rule authorizes each inmate five free stamps per month, allows the purchase of additional postage, and in the event the inmate has neither funds nor sufficient postage, provides postage for verified emergency situations, for mailing Administrative Remedy forms, and for mailing legal correspondence. While inmates do not earn regular scale wages, neither do they have regular expenses, such as housing, food, medical care, etc. A comment that a significant number of inmates (including physically handicapped, hospital patients, and inmates in segregation) receive no money from any source is too broad a generalization. Physically handicapped inmates are eligible for paid employment. Hospital patients and inmates in segregation are usually in this status for only a short time, before their return to general population. For these inmates, as for the entire population, the rule provides a reasonable means to ensure an inmate's opportunity to correspond. Inmates in areas other than those specified are also eligible for paid employment. Most inmates have sufficient funds to purchase stamps. As of January 31, 1980, the average inmate trust fund account balance was $85.00.

In establishing this rule, we kept in mind the alternate means for inmates to be in touch with their families. Personal visits are important and while, as one commenter noted, distance from home is a factor in family visiting, our experience has shown that many inmates receive regular visits from family members. In addition, the Bureau has liberal telephone regulations, allowing inmates at all institutions to converse with family members or other acquaintances. These alternatives, along with the correspondence provisions, provide the inmate with the means to maintain contact with family, friends, and others. The Bureau has not ignored its long-standing belief in the value of "constructive wholesome contact with the public" nor has it ignored the requirements of *Procunier* v. *Martinez*. We continue to recognize the importance of maintaining community contacts through correspondence. The rule does not unduly restrict this contact and allows the inmate sufficient opportunity for such contacts.

We do not see how the rule discourages airing of complaints and grievances to courts, attorneys, Congress, and public interest organizations interested in prison conditions and treatment. The Bureau pays reasonable postage costs for attorney and court mail when the inmate has neither funds nor sufficient postage. The inmate has the option of using his free allotment to mail correspondence to Congress or public interest organizations. While the rule ensures means for an inmate to maintain community contact, it also encourages the inmate's development of responsibility on how to budget his funds. For this reason, we do not agree with a comment which implies that it is wrong to require the inmate to make choices on how to spend his funds, for example, whether to buy a pack of cigarettes or to mail a letter.

We disagree with a comment that the Bureau revised its rule based on criticism toward the former policy. The Bureau's rule is based on both past abuses and the significant increase in postal costs. While we have no way of knowing exactly how many inmates abused the former policy, examples of abuse included instances where inmates mailed the same letter to each member of Congress. Other inmates used the free mailing privilege to solicit voluminous "junk mail" from mail order and other firms. At one institution inmates, using newspapers to get names and addresses, wrote to numerous recent widows stating that their deceased husbands owed them money. One inmate sent

over 150 cards and letters to people he did not know asking for money. Inmates also at times made reference to their "franking privilege" in letters to lend credibility to the purported "official" nature of their correspondence. Abuses such as these, and the dramatic increase in postal costs (from $600,000 in 1975 to 1.4 million dollars in 1978), led the Bureau to define the term "reasonable number." Neither do we concur with a comment that the new policy engages in overkill, and that less restrictive alternatives exist. Placement on the restricted correspondence list, as suggested by one commenter, does not limit the number of letters an inmate may send. That provision was deleted upon implementation of the interim rule.

Comments that the rule will require additional staff and not result in financial savings are mistaken. The distribution of postage stamps is done by existing and available personnel and our early experience has shown that administrative expense in connection with the rule is minimal. The savings derived are available for use in other areas. Contrary to the thrust of another comment, the Bureau is continually assessing cost factors and taking appropriate action to conserve public monies.

Comments were also received on allowing inmates to purchase stamps from the commissary. A comment that the commissary pay postage costs is not practical, since commissary earnings are not sufficient to pay for all postage; to use them for postage would diminish or eliminate their use in other areas, where they are spent for the good of all inmates. An inmate in one of the Federal Correctional Institutions commented that while he can understand the basis for inmates paying their own postage, he objected to the funds coming from his commissary account. He offered various alternatives, including reception of stamps from outside the institution, allowing the incoming letter to contain a stamped self-addressed envelope, or letting the purchase of stamps come from outside the commissary spending limitation. Other commenters expressed similar concerns, saying that some Bureau institutions were establishing different limits on the number of stamps purchased at one time and in at least one case were limiting the number of letters mailed by an inmate. In response to these comments, the Bureau has revised its implementation procedure. The commissary spending limitation has been raised an additional $10.00 per month in recognition that inmates purchase stamps from their commissary allotment. The Bureau recognizes the potential, as noted by a commenter, for the development of a "Black Market" and for stamps becoming a media for gambling, strong-arming, etc. Accordingly, the Bureau has suggested that institutions establish a guideline on the number of stamps an inmate may purchase or possess at any one time. This action is necessary, based on the need to protect institution security and good order. It does not restrict purchase of additional stamps at the next commissary visit, provided the inmate does not retain a total amount greater than the institutional limit. If the inmate desires, the entire commissary allotment might be used to purchase stamps, in effect, the current equivalent of 500 first class stamps per month. The Bureau cannot allow stamps to come in from outside or allow stamped self-addressed envelopes to be included within incoming letters. As expressed previously, both approaches lend themselves to the introduction of contraband. As an alternative and pursuant to institution rules, persons in the community may send the inmate a sum of money for the purchase of stamps.

A comment expressed concern over the lapse of time between an inmate's transfer to a new institution and the subsequent arrival of the inmate's funds. The commenter says the lack of available funds affects the inmate's ability to purchase postage. The Bureau is working to expedite the transfer of funds. In the interval, the inmate is encouraged to purchase sufficient stamps prior to the transfer.

Comments were received on the provision providing writing paper and envelopes at no cost to the inmate. An inmate at Atlanta objects to use of the official Bureau of Prisons envelope, saying if he pays, it is not official business. We agree and franked envelopes may not be used where the inmate pays postage. Comments also were received pertaining to organizations and foreign correspondence. One commenter stated that organizations without funds have no way to keep in touch with the community unless members donate stamps. This is a realistic approach and fits the concept of inmate organizations being responsible for themselves. A comment on the availability of postage necessary for foreign correspondence is addressed in the internal implementation language which requires each institution to carry stamps of several different denominations.

A comment on § 540.20(b) suggested that the phrase "or sufficient postage" be deleted, as it is confusing. Other comments addressed the aspect of indigent inmates as opposed to inmates "without funds". A commenter said the regulations were illegal as they deny indigents access to the courts. The commenter claims the policy has caused him to delay and stagger filings so as to have funds for postage. § 540.20(b) states the rule for sending legal mail at government expense when the inmate is without funds. The Bureau does not utilize an indigency standard in the rule, as this is a legal standard recognized in federal forma pauperis statutes, and is subject to discretionary interpretation. The Bureau uses a more realistic and consistent determination that an inmate is without funds when his commissary account balance is under 15¢. When that occurs, an inmate is able to request, as specified in § 540.20(b), that legal mail be sent at government expense. We see no merit to the suggestion that the phrase "or ("nor" in final rule) sufficient postage" be deleted. The commenter was referring to a situation where the inmate was limited to possession of a few stamps. The Bureau has significantly expanded this provision. These adjustments ensure an inmate has the opportunity to maintain sufficient postage and, conversely, provides that when the inmate is without sufficient postage, specified mail is sent at government expense. Comments that the prison pay expenses for an inmate's family, legal, judicial, Bureau of Prisons, and congressional mail have been considered. As indicated in the earlier response on airing grievances and complaints, the Bureau will pay costs of legal (including judicial) mail, as well as Administrative Remedy filings, when the inmate has neither funds nor sufficient postage. Additional mail may be sent by use of the free allotment or inmate purchase of additional postage. The inmate has a responsibility to budget his funds to accommodate his own postage requirements. The final rule attempts to balance the obvious needs for all offenders to maintain family and community ties with the Bureau of Prisons overall budgetary constraints. By providing inmates with five free stamps per month, and the ability to purchase additional postage, and by allowing legal mail and Administrative Remedy mail to be sent for an inmate who has neither funds nor sufficient postage, the Bureau provides each inmate the opportunity to maintain contacts with the community as well as with public and private organizations and agencies.

IV. Part 540, Subpart D—Visiting Regulations

Summary of Changes

1. Section 540.40—The final rule expresses the Bureau of Prisons recognition that visiting by family, friends, and community groups maintains the morale of the inmate and develops closer relationships between the inmates and family members or others in the community. The term "discipline" is deleted from the final rule as the Warden may now restrict inmate visiting only when necessary to insure security and good order of the institution.

2. Section 540.41—The final rule expands proposed § 540.42 and requires the visting room to be arranged to provide adequate supervision as required by the security level of the institution. Visiting in locations other than the main visting room is permitted in the final rule on the basis of institutional security level, as opposed to the proposed custody classification of the inmate. The final rule authorizes equipping a portion of the visiting room to provide facilities for the children of visitors.

3. Section 540.42—The final rule, retitled "Visiting times," expands proposed § 540.43(a) to recognize that restriction of visiting to weekends and holidays poses a hardship to some individuals. The final rule specifies that arrangements for other suitable hours shall be made if at all possible.

4. Section 540.43—Final § 540.43 is retitled "Frequency of visits and number of visitors". The final rule requires the Warden to allow each inmate a minimum of four hours visiting time per month. The rule clarifies proposed § 540.43(b) to specify that limits on length or frequency of visits is permissible only to avoid chronic overcrowding. It also states the basis for limits on the maximum number of persons allowed to visit an inmate at one time. The final rule authorizes exceptions to this section when warranted by special circumstances.

5. Section 540.44—Final § 540.44, "Regular visitors", modifies the language of proposed § 540.44(a), (b), and (c). The list of proposed visitors is submitted to "designated staff" as opposed to the "Warden" in proposed § 540.44(c). The specific language of proposed § 540.44(c) is deleted as the phrase "suitable investigation" sufficiently recognizes that an investigation may be undertaken, and that the proposed visitor may be asked to provide information. The final rule identifies persons who may be recognized as regular visitors. This includes members of the immediate family, other relatives, friends and associates, including persons with prior criminal convictions and children under the age of 16. The substance of proposed §§ 540.44(a) and 540.45(b) is now in final § 540.44(a) and (e). Final § 540.44(e) requires that children be kept under supervision of a responsible adult or a children's program. Final § 540.44(b) and (c) expand proposed § 540.44(b) by inclusion of specific categories for both "other relatives" and "friends and associates". Proposed rule language of "beneficial for the inmate" is deleted. Creating a threat to the security or good order of the institution is the primary basis on which a visit may be rejected. Recognizing the increased security required in Security Level 4–6 and administrative institutions, the final rule requires existence of an established relationship prior to confinement for friends and associates of inmates in those institutions. Exceptions to the prior relationship rule are possible as specified in final § 540.44(c)(2). Proposed § 540.45(c) becomes final § 540.44(d) and recognizes that a criminal conviction does not necessarily prohibit visiting. The proposed rule language of "value * * * to the inmate" is deleted. Security of the institution as weighed against nature, extent, and recentness of convictions is the prevailing factor. The final rule recognizes that specific approval of the Warden may be required for visits by persons with criminal records.

6. Section 540.45—The final rule, entitled "Business visitors" expands language previously contained in proposed § 540.45(d).

7. Section 540.46—The final rule, retitled "Consular visitors" revises proposed § 540.47 to allow an inmate to receive a consular visit on matters of legitimate business even when the inmate is in disciplinary status.

8. Section 540.47—The final rule, entitled "Visits from representatives of community groups" is new. It authorizes visits by representatives of community groups, subject to approval of the Warden.

9. Section 540.48—The final rule, entitled "Special visits," expands proposed § 540.45(a). The proposed rule language of "acute" family problems is deleted as the term "acute" is hard to define. Visits by attorneys are included within this section and in the final rule on Inmate Legal Activities (see 28 CFR Part 543). Accordingly, proposed § 540.46, "Visits by attorneys" is deleted. Final § 540.48(b) and (d) allows the Warden to permit special visits for (1) authorized visitors at other than regularly established visiting times, or in excess of regularly permitted visits, and (2) pre-trial inmates to assist in protecting their businesses or in preparing for trial.

10. Section 540.49—This section, entitled "Transportation assistance," is new. It requires the Warden to ensure that directions for transportation to and from the institution are provided for the approved visitor, and to provide access to a telephone at the institution and to post commercial transportation phone numbers there.

11. Section 540.50—This section, entitled "Visits to inmates not in regular population status" contains rules discussed in proposed § 540.48. Final § 540.50(a) expands proposed § 540.48(a) by including inmates in holdover status. The final rule specifies that visits may be limited to the immediate family unless there is an approved visiting list from a transferring institution or other verification of proposed visitors. Section 540.50(b)(1) authorizes the Chief Medical Officer, in consultation with the Chief Correctional Supervisor, to make the determination whether an inmate hospitalized in the institution may receive a visit and, if so, whether it may be held in the hospital. This expands upon the language contained in proposed § 540.48(b) which authorized the Warden to limit this type visit. Proposed § 540.48(c) is reworded and becomes final § 540.50(b)(2). Section 540.50(c) clarifies the basis for denial of visiting privileges as discussed in proposed § 540.48(d). This denial occurs only where visiting guidelines have been violated or where there is a reasonable relationship between misconduct and the orderliness or security of the visiting room. Deleted is the proposed rule language, "jeopardize the security, good order or discipline of the institution."

12. Section 540.51—This section, entitled "Procedures" contains information from proposed §§ 540.41 and 540.44. Final § 540.51(a) gives the Warden the responsibility for the institution's visiting program. Section 540.51(b) describes procedures for preparation of the visiting list, and permits a background investigation to be conducted. Section 540.51(b)(3) clarifies proposed § 540.44(d) by placing the responsibility on the inmate to ask his prospective visitor to sign a release authorization, allowing the Bureau to receive information from law enforcement or crime information agencies. The signed form must be returned to staff before any further action may be taken on the request to visit. Section 540.51(b)(4) is new. It requires the Warden to notify the inmate of each approval or disapproval of

requested visiting list changes. The Warden also provides the inmate with a copy of the visiting guidelines and with directions for transportation to and from the institution. The inmate is responsible for notifying his visitor of the approval or disapproval to visit and is expected to forward to the visitor the visiting guidelines and directions for transportation to and from the institution. The guidelines are to include specific directions for reaching the institution and will reference 18 USC 1791. Section 540.51(b)(5) recognizes that the inmate may ask to amend his visiting list at any time. Section 540.51(c) is new language, but expresses the Bureau of Prisons' longstanding right and practice to require that staff verify the identity of visitors prior to the visitors' admission to the institution. Section 540.51(d) requires staff make available to visitors written guidelines for visiting and requires that each visitor sign a statement declaring that he does not knowingly have any articles in his possession which could pose a threat to institution security. In its internal instructions to staff, the Bureau requires that the visiting guidelines be available at the visiting area for those persons who state that they are unfamiliar with these requirements. This provision will ensure that all visitors have the opportunity to become familiar with the institution's visiting guidelines, either through reception from the inmate or at the time of the visit. Section 540.51(e) is a modification of proposed § 540.41(c). Specifically, it deletes the phrase "at any time" in recognition of more specific regulations that have been proposed regarding searches of visitors (See 44 FR 2982–2983). Search of inmates is deleted from the final rule, also covered separately in a more specific rule (see 45 FR 23367–23368). Final § 540.51(f) requires the Warden to maintain a record of visitors to each inmate and specifies that the visitor's signature shall be required on at least one visiting log or record maintained by the institution. Final § 540.51(g)(1) and (g)(4) clarifies proposed § 540.41(a), now final § 540.51(g). The final rule deletes the term "discipline", with security and good order of the institution being recognized as the major concern in supervision of visits. Section 540.51(g)(1) relates to the visiting room officer's responsibility to insure that visits are conducted in an orderly manner. Section 540.51(g)(4) charges the officer with responsibility to be aware of articles passed between the inmate and the visitor. The final rule recognizes staff's right to examine an item when a reasonable basis exists to believe that the item constitutes contraband or is otherwise in violation of law or Bureau regulations. This is consistent with the intent of proposed § 540.41(a), now final § 540.51(g). Proposed § 540.41(b), in stipulating that "staff shall permit limited physical contact", was found to conflict with the need at one institution for non-contact visiting as required by security considerations. Thus, final § 540.51(g)(2) is revised to read "unless there is clear and convincing evidence that such contact would jeopardize the safety or security of the institution." It is expected that some physical contact will be permitted at all institutions with facilities in use for contact visiting, with limitations imposed to minimize the opportunity for the introduction of contraband and to maintain the orderly operation of the visiting area. Proposed § 540.41(d) becomes final § 540.51(g)(3) and is amended to allow either the Warden or a designated staff member to approve the acceptance of packages. Similarly, money may be left with a designated staff member for deposit in the inmate's commissary account.

13. Section 540.52—Section 540.52, "Penalty for violation of visiting regulations", modifies language previously contained in proposed § 540.49. The final rule states denial of future visits may be taken as a result of disciplinary action.

Other Comments

1. Section 540.40—In response to the provision empowering the Warden to restrict inmate visits, one comment contended that space and expense considerations should not form the basis for restrictions. Recognizing security and good order are inextricably bound to proper allocation of the prison's limited resources, factors like staffing, space, and expense will unavoidably affect visiting policies.

2. Section 540.42—A comment objected to the phrase "at a minimum" and "when feasible" in proposed § 540.43(a). The final rule (§ 540.42) recognizes that to limit visits to weekends and holidays may impose a hardship on some visitors. The rule sets minimum visiting times. It is fully expected that Wardens will establish additional visiting times as permitted by institutional resources.

3. Section 540.44—In response to the rule directing the Warden to place members of the inmate's immediate family on his regular visiting list, one comment pointed out the apparent omission of common-law wives and husbands from relationships designated as "immediate family". The word "spouse" includes common-law spouses in those states which recognize common law status. In states which do not, common-law relationships have no legal standing and, therefore, cannot be considered "immediate family".

A commenter objected to proposed § 540.44(c)(6) in which the prospective visitor is asked whether he is writing or visiting another inmate. The commenter suggests this information could be used to arbitrarily deny visits and may violate First Amendment rights absent compelling reason. While not specifically cited in the final rule, this information is a necessary part of the Bureau's investigation to determine whether it has ever been necessary to deny the prospective visitor permission to visit or correspond with other inmates on the basis of posing a threat to the security or good order of the institution. Such use justifies the inquiry.

4. Section 540.51—A commenter suggested that the inmate receive written reasons for a denial of visitation rights, and that administrative appeals be made available. The final rule requires staff notify the inmate of each approval or disapproval of a requested person for the visiting list. The Administrative Remedy Procedure (see 28 CFR Part 542) provides the inmate an avenue of appeal.

The same commenter suggested that the Bureau delineate identification procedures rather than leave this to the discretion of individual prison officials. It is not necessary or possible to provide a comprehensive list of identification procedures. Driver's licenses and social security cards are the most common means of identification, but we see no value in restricting Bureau staff from using other available resources to verify identity and to clarify doubtful cases.

Comments challenged the rules governing supervision of visits, which is done primarily for preventing the introduction of contraband; restricting physical contact between inmates and visitors; and permitting inspections and searches of persons and belongings. One suggestion for no inspections recommended that some sort of depository exist outside the visiting area for visitors' personal belongings. At the present time, many institutions, generally those of greater security, provide lockers to serve just that function, while the construction of similar areas at the remaining prisons is generally not practicable.

Other comments questioned the authority of staff to conduct searches of inmates and visitors, citing unnecessary intrusion upon personal privacy. One suggested that a standard of probable cause or reasonable suspicion should be met before warrantless searches would be allowed. Another urged the drafting

of more specific search regulations. The search, and any privacy intrusion it is felt to produce, may be avoided by declining the visit; to consent to the visit is to consent to the necessity for searches, as called for in these rules. More specific rules have been proposed separately, both as to searches of inmates (see 45 FR 23367–23368) and searches of visitors (see 44 FR 2982–2983).

As for restrictions on physical contact between inmates and visitors, these are necessary for security reasons. In view of the public and family-oriented nature of inmate visiting, standards of behavior which serve the interests of good taste and propriety are necessary.

A commenter favored regulations to insure that the inmate's privacy is not unnecessarily abridged during the visit. The Bureau agrees with this concept and final § 540.51(g) addresses this issue. Eavesdropping and monitoring of conversations between visitor and inmate are not condoned by the Bureau. Staff supervision is intended to be unobtrusive, except where there exists a reasonable basis to believe contraband is being passed or where there is a threat to the security and good order of the institution.

V. Part 570 Subpart D—Reimbursement by Inmates Confined in Federal Facilities Participating in Community Employment Programs

1. Subpart D is retitled Reimbursement by Inmates Confined in Federal Facilities Participating in Community Employment Programs. This change recognizes that the rule applies only to work releasees confined in federal institutions and residents in federal community treatment centers. Final § 570.50 includes this recognition.

2. Section 570.51—§ 570.51(a) is revised to state the $2.00 reimbursement "contributes to" (but does not absorb) the cost of services and supplies. The phrase "into the U.S. Treasury" is deleted from final § 570.51(a), with the Bureau's internal instructions to staff requiring that the reimbursement be deposited in the U.S. Treasury. Proposed § 570.51(b) is deleted as its intent is reflected in final § 570.51(a). Proposed § 570.51(c) becomes final § 5709.51(b).

3. Section 570.52—§ 570.52, "Waivers", is new. § 570.52(a) expands proposed § 570.51(d), providing examples of when the Warden (as opposed to "Center Director" in the proposed rule) may waive the fixed charge. The proposed rule language of "emergency or compelling" reasons is reflected in final § 570.52(b) which authorizes the Warden to recommend for approval of the Regional Director a waiver of the fixed charge for an inmate with a "compelling reason" other than as specified in final § 570.52(a). Proposed § 570.51(e) is deleted, with its intent reflected in final § 570.52(a)(3). Reference in proposed § 570.51(f)–(h) to not charging an inmate who works less than four hours per day or prorating the fixed charge when the inmate is on layoff from employment or who works more than four hours a day but less than 40 hours a week is deleted from the final rule. The concept is covered by the rule allowing waiver for less than full-time employment. Final § 570.52(a) (1) and (2) allow the fixed charge to be waived when the inmate is unemployed or employed less than full time.

VI. Part 571 Subpart B—Pre-Release Program

1. Section 571.10—Final § 571.10 requires the Warden to provide a pre-release program at both the institution and unit levels.

2. Section 571.12—The second sentence of § 571.12(b) is revised to recognize that, while staff may require an inmate to participate in a specific number of pre-release sessions, participation in other sessions is voluntary. The final rule requires staff to document in the inmate's central file the inmate's participation in the pre-release program. Proposed § 571.12(c) is deleted, since its intent is incorporated into § 571.12(b). Proposed § 571.12(d), now final § 571.12(c), deletes specific reference to Part 570, Subpart C, inserting the phrase "Bureau of Prisons' rules on furloughs". Proposed § 571.12(e), now final § 571.12(d), provides additional examples of "proper identification".

Conclusion

Accordingly, pursuant to the rulemaking authority vested in the Attorney General in 5 U.S.C. 552(a) and delegated to the Director of the Bureau of Prisons in 28 CFR 0.96(t), 28 CFR, Chapter V, is amended as set forth below.

Dated: June 25, 1980.

Norman A. Carlson,

Director, Bureau of Prisons.

1. Subchapter A is amended by adding Part 513.

PART 513—ACCESS TO RECORDS

Subpart A—[Reserved]

Subpart B—Production or Disclosure of Material or Information: FBI Identification Records; FBI Criminal History Records

Sec.
513.10 Purpose and scope.
513.11 Procedures applicable where an FBI identification record is sought.
513.12 Procedures applicable where an FBI criminal history record (NCIC/CCH) is sought.
513.13 Inmate request for record clarification.

Authority: 5 U.S.C. 301; 18 U.S.C. 4001, 4042, 4081, 4082, 5015, 5039; 28 U.S.C. 509, 510; 28 CFR 0.95–0.99.

Subpart A—[Reserved]

Subpart B—Production or Disclosure of Material or Information: FBI Identification Records; FBI Criminal History Records

§ 513.10 Purpose and scope.

By authorization of the Federal Bureau of Investigation (FBI), the Bureau of Prisons may provide an inmate with a copy of his FBI identification record commonly known as a rap sheet. Where an inmate's criminal history record has been computerized, staff may provide a copy of the National Crime Information Center Computerized Criminal History record (NCIC/CCH) at the inmate's request.

§ 513.11 Procedures applicable where an FBI identification record is sought.

(a) The inmate may ask institution staff for a copy of his FBI identification record.

(b) Staff shall provide the inmate with a copy of the requested record.

(c) An inmate who so desires may obtain a copy of the identification record directly from the FBI by following the procedure outlined in 28 CFR 16.30 et seq.

(1) Bureau of Prisons staff shall assist the inmate to obtain the fingerprint impressions required to be submitted with such an application.

(2) The inmate may direct that funds be withdrawn from his institution account to pay the applicable fee.

§ 513.12 Procedures applicable where an FBI criminal history record (NCIC/CCH) is sought.

(a) An inmate whose criminal history record is stored in the FBI's National Crime Information Center Computerized Criminal History records may ask institution staff for a copy of this record.

(b) Staff shall provide the NCIC/CCH record only in response to a request from the inmate who is the subject of the record.

(c) Staff shall honor only one such request per inmate per month.

(d) An inmate who so desires may address the request for his NCIC/CCH record directly to the FBI according to the procedure outlined in § 513.11(c).

§ 513.13 Inmate request for record clarification.

Where the inmate believes that the record is incorrect or inaccurate, the inmate may follow procedures outlined in 28 CFR 16.30 et seq.

2. In Subchapter B, Subpart C is added to Part 522.

PART 522—ADMISSION TO INSTITUTION

* * * * *

Subpart C—Intake Screening

Sec.
522.20 Purpose and scope.
522.21 Procedures.

Authority: 5 U.S.C. 301; 18 U.S.C. 4001, 4042, 4081, 4082, 5015, 5039; 28 U.S.C. 509, 510; 28 CFR 0.95–0.99.

* * * * *

Subpart C—Intake Screening

§ 522.20 Purpose and scope.

Bureau of Prisons staff screen newly arrived inmates to ensure that Bureau health, safety, and security standards are met.

§ 522.21 Procedures.

(a) Except for such camps and other satellite facilities where segregating a newly arrived inmate in detention is not feasible, the Warden shall ensure that a newly arrived inmate is cleared by the Medical Department and provided a social interview by staff before assignment to the general population.

(1) Immediately upon an inmate's arrival, staff shall interview the inmate to determine if there are non-medical reasons for housing the inmate away from the general population. Staff shall evaluate both the general physical appearance and emotional condition of the inmate.

(2) Within 24 hours after an inmate's arrival, medical staff shall medically screen the inmate in compliance with Bureau of Prisons' medical procedures to determine if there are medical reasons for housing the inmate away from the general population or for restricting temporary work assignments.

(3) Staff shall place recorded results of the intake medical screening and the social interview in the inmate's central file.

3. Subchapter C, Part 540 is amended as follows:

A. Subparts A and B are revised.

B. Subpart D is added.

PART 540—CONTACT WITH PERSONS IN THE COMMUNITY

Subpart A—General

Sec.
540.2 Definitions.

Subpart B—Correspondence

Sec.
540.10 Purpose and scope.
540.11 Controls and procedures.
540.12 Notification of rejections.
540.13 General correspondence.
540.14 Restricted general correspondence.
540.15 Inmate correspondence while in segregation and holdover status.
540.16 Correspondence between confined inmates.
540.17 Special mail.
540.18 Legal correspondence.
540.19 Inmate correspondence with representatives of the news media.
540.20 Payment of postage.
540.21 Returned mail.
540.22 Change of address and forwarding of mail for inmates.

Subpart C [Reserved]

Subpart D—Visiting Regulations

Sec.
540.40 Purpose and scope.
540.41 Visiting facilities.
540.42 Visiting times.
540.43 Frequency of visits and number of visitors.
540.44 Regular visitors.
540.45 Business visitors.
540.46 Consular visitors.
540.47 Visits from representatives of community groups.
540.48 Special visits.
540.49 Transportation assistance.
540. Visits to inmates not in regular population status.
540.51 Procedures.
540.52 Penalty for violation of visiting regulations.

Authority: 5 U.S.C. 301; 18 U.S.C. 4001, 4042, 4081, 4082, 5015, 5039; 28 U.S.C. 509, 510; 28 CFR 0.95–0.99.

Subpart A—General

§ 540.2 Definitions.

(a) "General Correspondence" means incoming or outgoing correspondence other than "special mail". "General Correspondence" includes packages sent through the mail.

(1) "Open General Correspondence" means general correspondence which is not limited to a list of authorized correspondents, except as provided in § 540.16.

(2) "Restricted General Correspondence" means general correspondence which is limited to a list of authorized correspondents.

(b) "Representatives of the News Media" means persons whose principal employment is to gather or report news for:

(1) A newspaper which qualifies as a general circulation newspaper in the community in which it is published. A newspaper is one of "general circulation" if it circulates among the general public and if it publishes news of a general character of general interest to the public such as news of political, religious, commercial, or social affairs. A key test to determine whether a newspaper qualifies as a "general circulation" newspaper is to determine whether the paper qualifies for the purpose of publishing legal notices in the community in which it is located or the area to which it distributes;

(2) A news magazine which has a national circulation and is sold by newsstands and by mail subscription to the general public;

(3) A national or international news service; or

(4) A radio or television news program of a station holding a Federal Communications Commission license.

(c) "Special Mail" means correspondence sent to the following: President and Vice President of the U.S., the U.S. Department of Justice (including the Bureau of Prisons), U.S. Attorneys Offices, Surgeon General, U.S. Public Health Service, Secretary of the Army, Navy, or Air Force, U.S. Courts including U.S. Probation Officers, Members of the U.S. Congress, Embassies and Consulates, Governors, State Attorneys General, Prosecuting Attorneys, Directors of State Departments of Corrections, State Parole Commissioners, State Legislators, State Courts, State Probation Officers, other Federal and State law enforcement offices, attorneys, and representatives of the news media.

"Special Mail" also includes correspondence received from the following: President and Vice President of the U.S., attorneys, Members of the U.S. Congress, Embassies and Consulates, the U.S. Department of Justice (excluding the Bureau of Prisons but including U.S. Attorneys), other Federal law enforcement officers, State Attorneys General, Prosecuting Attorneys, Governors, U.S. Courts; and State Courts.

Subpart B—Correspondence

§ 540.10 Purpose and scope.

The Bureau of Prisons encourages correspondence that is directed to socially useful goals. The Warden shall establish correspondence procedures for inmates in each institution, as authorized and suggested in this rule. Regulations contained in this subpart supplement regulations generally applicable to mail, issued by the United States Postal Service (See 39 CFR, Chapter I).

§ 540.11 Controls and procedures.

(a) The Warden shall establish and exercise controls to protect individuals, and the security, discipline, and good order of the institution. The size,

complexity, and security level of the institution, the degree of sophistication of the inmates confined, and other variables require flexibility in correspondence procedures. All Wardens shall establish open general correspondence procedures.

(b) Staff shall inform each inmate in writing promptly after arrival at an institution of that institution's rules for handling of inmate mail. This notice includes the following statement:

The staff of each institution of the Bureau of Prisons has the authority to open all mail addressed to you before it is delivered to you. "Special Mail" (mail from the President and Vice President of the U.S., attorneys, Members of the U.S. Congress, Embassies and Consulates, the U.S. Department of Justice (excluding the Bureau of Prisons but including U.S. Attorneys), other Federal law enforcement officers, State Attorneys General, Prosecuting Attorneys, Governors, U.S. Courts, and State Courts) may be opened only in your presence to be checked for contraband. This procedure occurs only if the sender adequately identifies himself on the envelope and the envelope is marked "Special Mail—Open only in the presence of the inmate." Other mail may be opened and read by the staff.

If you do not want your general correspondence opened and read, the Bureau will return it to the Postal Service. This means that you will not receive such mail. You may choose whether you want your general correspondence delivered to you subject to the above conditions, or returned to the Postal Service. Whatever your choice, special mail will be delivered to you, after it is opened in your presence and checked for contraband. You can make your choice by signing Part I or Part II.

Part I—General Correspondence To Be Returned to the Postal Service

I have read or had read to me the foregoing notice regarding mail. I do not want my general correspondence opened and read. I request that the Bureau of Prisons return my general correspondence to the Postal Service. I understand that special mail will be delivered to me, after it is opened in my presence and checked for contraband.

(Name) _____
(Reg. No.) _____
(Date) _____

Part II—General Correspondence To Be Opened, Read, and Delivered

I have read or had read to me the foregoing notice regarding mail. I wish to receive my general correspondence. I understand that the Bureau of Prisons may open and read my general correspondence if I choose to receive same. I also understand that special mail will be delivered to me, after it is opened in my presence and checked for contraband.

(Name) _____
(Reg. No.) _____
(Date) _____
Inmate (Name) _____
Reg. No. _____, refused to sign this form.

He (she) was advised by me that the Bureau of Prisons retains the authority to open and read all general correspondence. The inmate was also advised that his (her) refusal to sign this form will be interpreted as an indication that he (she) wishes to receive general correspondence subject to the above mentioned conditions.

Staff Member's Signature _____
Date _____

(c) Staff shall inform an inmate that letters placed in the U.S. Mail are placed there at the request of the inmate and he must assume responsibility for the contents of each letter. Correspondence containing threats, extortion, etc., may result in prosecution for violation of federal laws. When such material is discovered, the inmate may be subject to disciplinary action, the written material may be copied, and all material may be referred to the appropriate law enforcement agency for prosecution.

(d) An inmate shall place his or her name on each outgoing envelope.

§ 540.12 Notification of rejections.

When correspondence is rejected because of content, the Warden shall notify the sender in writing of the rejection and the reasons for the rejection. The Warden shall also give notice that the sender may appeal the rejection. The Warden shall also notify an inmate of the rejection of any letter addressed to him, along with the reasons for the rejection and notify him of the right to appeal the rejection. The Warden shall refer an appeal to an official other than the one who originally disapproved the correspondence. The Warden shall return rejected correspondence to the sender unless the correspondence includes plans for or discussion of commission of a crime or evidence of a crime, in which case there is no need to return the correspondence or give notice of the rejection, and the correspondence should be referred to appropriate law enforcement authorities. Also, contraband need not be returned to the sender.

§ 540.13 General correspondence.

(a) The Warden may not limit the number of incoming letters an inmate may receive unless the number received places an unreasonable burden on the institution.

(b) Institution staff shall open and inspect all incoming general correspondence. Incoming general correspondence may be read as frequently as deemed necessary to maintain security or monitor a particular problem confronting an inmate.

(c) Outgoing mail in Security Level 1, 2, 3, and of pre-trial detainees in all institutions may be sealed by the inmate and is sent out unopened and uninspected. Staff may open an inmate's outgoing general correspondence:

(1) If there is reason to believe it would interfere with the orderly running of the institution, that it would be threatening to the recipient, or that it would facilitate criminal activity;

(2) If the inmate is on a restricted correspondence list; or

(3) If the correspondence is between inmates. (See § 540.16)

(d) Outgoing mail in Security Level 4, 5, and 6 and administrative institutions, except "special mail", may not be sealed by the inmate and may be inspected and read by staff.

(e) The Warden may reject correspondence sent by or to an inmate if it contains any of the following:

(1) Matter which is nonmailable under law or postal regulations;

(2) Information of escape plots, of plans to commit illegal activities, or to violate institution rules;

(3) Direction of an inmate's business (See § 541.11(d), Prohibited Act No. 408). An inmate, unless he is a pre-trial detainee, may not direct a business while confined.

This does not, however, prohibit correspondence necessary to enable an inmate to protect property and funds that were legitimately his at the time of commitment. Thus, for example, an inmate may correspond about refinancing a mortgage on his home or sign insurance papers, but he may not operate a mortgage or insurance business while in the institution.

(4) Clear harassment of a member of the public, including invasion of privacy;

(5) A code; or

(6) Contraband. (See § 500.1. A package received without prior authorization by the Warden is considered to be contraband.)

§ 540.14 Restricted general correspondence.

(a) The Warden may place an inmate on restricted general correspondence based on misconduct or as a matter of classification.

Determining factors include the inmate's:

(1) Involvement in any of the activities listed in § 540.13(e);

(2) Attempting regularly to correspond with persons or businesses where the addressee is known by the inmate only through such sources as advertisements in newspapers, magazines, telephone directories, etc.;

(3) Being a security risk;

(4) Threatening a government official;

(5) Having committed an offense involving the mail;

(6) Having participated in major criminal activity of a sophisticated nature; or

(7) Notoriety or being highly publicized.

(b) The Warden may limit to a reasonable number persons on the approved restricted general correspondence list of an inmate.

(c) The Warden shall utilize one of the following procedures before placing an inmate on restricted general correpondence.

(1) Where the restriction will be based upon an incident report, procedures must be followed in accordance with inmate disciplinary regulations (Part 541, Subpart B of this Chapter).

(2) Where there is no incident report, the Warden:

(i) Shall advise the inmate in writing of the reasons the inmate is to be placed on restricted general correspondence;

(ii) Shall give the inmate the opportunity to respond to the classification or change in classification; the inmate has the option to respond orally or to submit written information or both; and

(iii) Shall notify the inmate of the decision and the reasons, and shall advise the inmate that the inmate may appeal the decision under the Administrative Remedy Procedure.

(d) When an inmate is placed on restricted general correspondence, the inmate may, except as provided in §§ 540.15 and 540.16:

(1) Correspond with his spouse, mother, father, children, and siblings, unless the correspondent is involved in a violation of correspondence regulations or would be a threat to the security or good order of the institution;

(2) Request other persons also to be placed on the approved correspondence list, subject to investigation, evaluation, and approval by the Warden; with prior approval, the inmate may write to a proposed correspondent to obtain a release authorizing an investigation; and

(3) Correspond with former business associates, unless it appears to the Warden that the proposed correspondent would be a threat to the security or good order of the institution, or that the resulting correspondence could reasonably be expected to result in criminal activity. Correspondence with former business associates is limited to social matters.

(e) The Warden may allow an inmate additional correspondence with persons other than those on his approval mailing list when the correspondence is shown to be necessary and does not require an addition to the mailing list because it is not of an ongoing nature.

§ 540.15 Inmate correspondence while in segregation and holdover status.

(a) The Warden shall permit an inmate in holdover status (i.e., enroute to a designated institution) to have correspondence privileges similar to those of other inmates insofar as practical.

(b) The Warden shall permit an inmate in segregation to have full correspondence privileges unless placed on restricted general correspondence under § 540.14.

§ 540.16 Correspondence between confined inmates.

An inmate may be permitted to correspond with an inmate confined in another penal or correctional institution, providing the other inmate is either a member of the immediate family, or is a party or a witness in a legal action in which both inmates are involved. The Warden may approve such correspondence in other exceptional circumstances, with particular regard to the security level of the institution, the nature of the relationship between the two inmates, and whether the inmate has other regular correspondence. The following additional limitations apply:

(a) Such correspondence may always be inspected and read by staff at the sending and receiving institutions (it may not be sealed by the inmate); and

(b) The Wardens of both institutions must approve of the correspondence.

§ 540.17 Special mail.

(a) The Warden shall open incoming special mail only in the presence of the inmate for inspection for physical contraband and the qualification of any enclosures as special mail. The correspondence may not be read or copied if the sender has adequately identified himself on the envelope, and the envelope is marked "Special Mail—Open only in the presence of the inmate".

(b) In the absence of adequate identification and the "special mail" marking indicated in paragraph (a) of this section appearing on the envelope, staff may treat the mail as general correspondence and may open, inspect, and read the mail.

(c) Outgoing special mail may be sealed by the inmate and is not subject to inspection.

(d) Staff shall stamp the following statement directly on the back side of the inmate's outgoing special mail: "The enclosed letter was processed through special mailing procedures for forwarding to you. The letter has been neither opened nor inspected. If the writer raises a question or problem over which this facility has jurisdiction, you may wish to return the material for further information or clarification. If the writer encloses correspondence for forwarding to another addressee, please return the enclosure to the above address."

§ 540.18 Legal correspondence.

(a) Staff shall mark each envelope of incoming legal mail (mail from courts or attorneys) to show the date and time of receipt, the date and time the letter is delivered to an inmate and opened in his presence, and the name of the staff member who delivered the letter.

(b) The inmate is responsible for advising his attorney that correspondence will be handled as special mail only if the envelope is marked with the attorney's name and an indication he is an attorney and the envelope is marked "Special Mail—Open only in the presence of the inmate". Legal mail shall be opened in accordance with special mail procedures (see § 540.17).

(c) Grounds for the limitation or denial of an attorney's correspondence rights or privileges are stated in Part 543, Subpart B. If such action is taken, the Warden shall give written notice to the attorney and the inmate affected.

(d) In order to send mail to an attorney's assistant or to a legal aid student or assistant, an inmate shall address the mail to the attorney or legal aid supervisor, or the legal organization or firm, to the attention of the student or assistant.

(e) Mail to an inmate from an attorney's assistant or legal aid student or assistant, in order to be identified and treated by staff as special mail, must be properly identified on the envelope as required in paragraph (b) of this section, and must be marked on the envelope as being mail from the attorney or from the legal aid supervisor.

§ 540.19 Inmate correspondence with representatives of the news media.

(a) An inmate may write through "special mail" to representatives of the news media specified by name or title (see § 540.2(b)).

(b) The inmate may not receive compensation or anything of value for correspondence with the news media. The inmate may not act as reporter or publish under a byline.

(c) Representatives of the news media may initiate correspondence with an inmate. Staff shall open incoming correspondence from representatives of the media and inspect for contraband, for its qualification as media correspondence, and for content which is likely to promote either illegal activity

or conduct contrary to Bureau regulations.

§ 540.20 Payment of postage.

(a) Each inmate shall receive five postage stamps, or the equivalent, each month, sufficient to mail five pieces of first-class domestic mail, weighing one ounce or less. Inmates who have verified correspondents in foreign countries may be provided postage for foreign mail in lieu of the domestic allowance.

(1) Additional postage charges are borne by the inmate. Postage shall be available for purchase in the inmate commissary.

(2) Writing paper and envelopes are provided at no cost to the inmate.

(3) Inmate organizations will purchase their own postage.

(b) An inmate who has neither funds nor sufficient postage and who wishes to mail legal mail (includes courts and attorneys) or Administrative Remedy forms will be provided the postage for such mailing. To prevent abuses of this provision, the Warden may impose restrictions on the free legal and Administrative Remedy mailings.

(c) Mailing at government expense is also allowed for necessary correspondence in verified emergency situations for inmates with neither funds nor sufficient postage.

(d) Mail received with postage due may not be delivered to the inmate until he has authorized withdrawal of funds from his commissary account to pay the postage due.

(e) Holdovers and pre-trial commitments will be provided a reasonable number of letters at government expense.

(f) Inmates may not be permitted to receive stamps or stamped envelopes from any source other than allocation or issuance from the institution or by purchase from commissary.

(g) Inmates must sign for all stamps, whether they are from general issue or those issued in emergency cases.

§ 540.21 Returned mail.

Staff shall open and inspect for contraband all undelivered mail returned to an institution by the Post Office before returning it to the inmate. The purpose of this inspection is to determine if the content originated with the inmate sender identified on the letter or package; to prevent the transmission of material, substances, and property which an inmate is not permitted to possess in the institution; and to determine that the mail was not opened or tampered with before its return to the institution. Any remailing is at the inmate's expense. Any returned mail qualifying as "special mail" is opened and inspected for contraband in the inmate's presence.

§ 540.22 Change of address and forwarding of mail for inmates.

(a) Staff shall make available to an inmate who is being released or transferred appropriate U.S. Postal Service forms for change of address.

(b) Each inmate is responsible for informing the U.S. Postal Service and any correspondents of a change of address.

(c) The Bureau of Prisons will pay postage for mailing one change of address card to the U.S. Postal Service. Additional postage is paid by the inmate.

(d) Except as provided in paragraph (e) of this section, all mail received for a released or transferred inmate will be returned to the U.S. Postal Service for disposition in accordance with U.S. Postal Service regulations.

(e) Staff shall permit an inmate released temporarily on writ to elect whether he wishes his mail held at the institution for a period not to exceed 30 days, or returned to the U.S. Postal Service for disposition in accordance with instructions the inmate may give the U.S. Postal Service.

(1) If the inmate refuses to make this election, staff at the institution shall document this refusal, and any reasons, in the inmate's central file. Staff shall return to the U.S. Postal Service all mail received for such an inmate after the inmate's departure.

(2) If the inmate does not return from writ within the time indicated, staff shall return to the U.S. Postal Service all mail being held for that inmate for disposition in accordance with postal regulations and any instructions which the inmate may give the U.S. Postal Service.

* * * * *

Subpart D—Visiting Regulations

§ 540.40 Purpose and scope.

The Bureau of Prisons encourages visiting by family, friends, and community groups to maintain the morale of the inmate and to develop closer relationships between the inmate and family members or others in the community. The Warden shall develop procedures consistent with this rule to permit inmate visiting. The Warden may restrict inmate visiting when necessary to insure the security and good order of the institution.

§ 540.41 Visiting facilities.

The Warden shall have the visiting room arranged so as to provide adequate supervision, adapted to the degree of security required by the type of institution. The Warden shall ensure that the visiting area is as comfortable and pleasant as practicable, and appropriately furnished and arranged. If space is available, the Warden shall have a portion of the visiting room equipped and set up to provide facilities for the children of visitors.

(a) Institutions of Security Levels 1, 2, and 3 may permit visits beyond the security perimeter, but always under supervision of an officer.

(b) Institutions of Security Levels 4, 5, and 6 and administrative institutions may establish outdoor visiting, but it will always be inside the security perimeter and always under supervision of an officer.

§ 540.42 Visiting times.

Each Warden shall establish a visiting schedule for the institution. At a minimum, the Warden shall permit visiting on Saturdays, Sundays, and holidays. The restriction of visiting to these days may be a hardship upon some families and arrangements for other suitable hours shall be made if at all possible. Where staff resources permit, the Warden may establish evening visiting hours.

§ 540.43 Frequency of visits and number of visitors.

The Warden shall allow each inmate a minimum of four hours visiting time per month. The Warden may limit the length or frequency of visits only to avoid chronic overcrowding. The Warden may establish a guideline for the maximum number of persons who may visit an inmate at one time, to prevent overcrowding in the visiting room or unusual difficulty in supervising a visit. Exceptions may be made to any local guideline when indicated by special circumstances, such as distance the visitor must travel, frequency of the inmate's visits, or health problems of the inmate or visitor.

§ 540.44 Regular visitors.

An inmate desiring to have regular visitors must submit a list of proposed visitors to the designated staff. Staff shall compile a visiting list for each inmate after suitable investigation (see § 540.51(b)). The list may include:

(a) Members of the Immediate Family—These persons include mother, father, step-parents, foster parents, brothers and sisters, spouse, and children. These individuals are placed on the visiting list, absent strong circumstances which preclude visiting.

(b) Other Relatives—These persons include grandparents, uncles, aunts, in-

laws, and cousins. They may be placed on the approved list if the inmate wishes to have visits from them regularly and if there exists no reason to exclude them.

(c) Friends and Associates:

(1) For Security Level 1–3 Institutions: The visiting privilege shall ordinarily be extended to friends and other non-relatives, unless visits could reasonably create a threat to the security and good order of the institution;

(2) For Security Level 4–6 Institutions and administrative institutions: The visiting privilege shall ordinarily be extended to friends and associates having an established relationship prior to confinement, unless such visits could reasonably create a threat to the security and good order of the institution. Exceptions to the prior relationship rule may be made, particularly for inmates without other visitors, when it is shown that the proposed visitor is reliable and poses no threat to the security or good order of the institution.

(d) Persons with Prior Criminal Convictions—The existence of a criminal conviction alone does not preclude visits. Staff shall give consideration to the nature, extent and recentness of convictions, as weighed against the security considerations of the institution. Specific approval of the Warden may be required before such visits take place.

(e) Children under Sixteen—Children under the age of 16 may not visit unless accompanied by a responsible adult. Children shall be kept under supervision of a responsible adult or a children's program. Exceptions in unusual circumstances may be made by special approval of the Warden.

§ 540.45 Business visitors.

No inmate is permitted to engage actively in a business or profession. An inmate who was engaged in a business or profession prior to commitment is expected to assign authority for the operation of such business or profession to a person in the community. Even though the inmate has turned over the operation of a business or profession to another person, there may be an occasion where a decision must be made which will substantially affect the assets or prospects of the business. In such cases, the Warden may permit a special visit.

§ 540.46 Consular visitors.

Whenever it has been determined that an inmate is a citizen of a foreign country, the Warden shall permit the consular representative of that country to visit on matters of legitimate business. The Warden may not withhold this privilege even though the inmate is in disciplinary status.

§ 540.47 Visits from representatives of community groups.

The Warden may approve as regular visitors, for one or more inmates, representatives from community groups such as civic and religious organziations, or other persons whose interests and qualifications for this kind of service are confirmed by staff. The Warden may waive the requirement for the existence of an established relationship prior to confinement for visitors approved under this section.

§ 540.48 Special visits.

The Warden may authorize special visits:

(a) For clergy, former or prospective employers, sponsors, and parole advisors. Visits in this category serve such purposes as assistance in release planning, counseling, and discussion of family problems;

(b) By an authorized visitor at other than regularly established visiting times, or in excess of regularly permitted visits;

(c) By attorneys;

(d) To pre-trial inmates to assist in protecting their business or in preparing for trial.

§ 540.49 Transportation assistance.

The Warden shall ensure that directions for transportation to and from the institution are provided for the approved visitor (see § 540.51(b)(4)). Directions for transportation to and from the institution and pay phone service, with commercial transportation phone numbers posted, are also to be made available at the institution to assist visitors.

§ 540.50 Visits to inmates not in regular population status.

(a) Admission and Holdover Status—The Warden may limit to the immediate family of the inmate visits during the admission-orientation period or for holdovers where there is neither a visiting list from a transferring institution nor other verification of proposed visitors.

(b) Hospital Patients:

(1) When visitors request to see an inmate who is hospitalized in the institution, the Chief Medical Officer (or, in his absence, the Hospital Administrative Officer), in consultation with the Chief Correctional Supervisor, shall determine whether a visit may occur, and if so, whether it may be held in the hospital.

(2) Visits to inmates hospitalized in the community may be restricted to only the immediate family and are subject to the general visiting policy of that hospital.

(c) Detention or Segregation Status—Staff may not suspend an inmate's visiting privileges because of violation of Bureau regulations other than for those specifically concerned with the visiting guidelines or having a reasonable relationship to the orderliness or security of the visiting room.

§ 540.51 Procedures.

(a) Responsibility: The Warden of the institution shall establish and enforce local visiting guidelines in accordance with the rules and regulations of the Bureau of Prisons.

(b) Preparation of the List of Visitors:

(1) Staff shall ask each inmate to submit during the admission-orientation process a list of proposed visitors. After appropriate investigation, staff shall prepare a list of all visitors and distribute that list to the inmate and the visiting room officer.

(2) Staff may request background information from potential visitors who are not members of the inmate's immediate family, before placing them on the inmate's approved visiting list.

(3) If a background investigation is necessary before approving a visitor, the inmate may be held responsible for having a release authorization form forwarded to the proposed visitor. That form must be signed and returned to staff by the proposed visitor prior to any further action regarding visiting. Upon receipt of the authorization form, staff may then forward a questionnaire, along with the release authorization, to the appropriate law enforcement or crime information agency.

(4) Staff shall notify the inmate of each approval or disapproval of a requested person for the visiting list. Upon approval of each visitor, staff shall provide the inmate with a copy of the visiting guidelines and with directions for transportation to and from the institution. The inmate is responsible for notifying the visitor of the approval or disapproval to visit and is expected to provide the approved visitor with a copy of the visiting guidelines and directions for transportation to and from the institution. The visiting guidelines shall include specific directions for reaching the institution and shall cite 18 USC 1791, which provides a penalty of not more than ten years for any person who introduces or attempts to introduce into or upon the grounds of any Federal penal or correctional institution or takes or attempts to take or send therefrom anything whatsoever without the knowledge and consent of the Chief Executive Officer of the institution.

(5) An inmate's visiting list may be amended at any time in accordance with the procedures of this section.

(c) Identification of Visitors: Staff shall verify the identity of each visitor (through driver's license, photo identification, etc.) prior to admission of the visitor to the institution.

(d) Notification to Visitors: Staff shall make available to all visitors written guidelines for visiting the institution. Staff shall have the visitor sign a statement acknowledging that the guidelines were provided and declaring that the visitor does not have any articles in his/her possession which the visitor knows to be a threat to the security of the institution. Staff may deny the visiting privilege to a visitor who refuses to make such a declaration.

(e) Searching Visitors: Staff may require a visitor to submit to a personal search, including a search of any items of personal property, as a condition of allowing or continuing a visit.

(f) Record of Visitors: The Warden shall maintain a record of visitors to each inmate. The visitor's signature may be required on that record and shall be required on at least one visiting log or record maintained by the institution.

(g) Supervision of Visits: Staff shall supervise each inmate visit to prevent the passage of contraband and to ensure the security and good order of the institution.

(1) The visiting room officer shall ensure that all visits are conducted in a quiet, orderly, and dignified manner. The visiting room officer may terminate visits that are not conducted in the appropriate manner. See 28 CFR § 541.11(c), item 5 for description of an inmate's responsibility during visits.

(2) Staff shall permit limited physical contact, such as handshaking, embracing and kissing, between an inmate and a visitor, unless there is clear and convincing evidence that such contact would jeopardize the safety or security of the institution. Where contact visiting is provided, handshaking, embracing and kissing are ordinarily permitted within the bounds of good taste and only at the beginning and at the end of the visit. The staff may limit physical contact to minimize opportunity for the introduction of contraband and to maintain the orderly operation of the visiting area.

(3) The visiting room officer may not accept articles or gifts of any kind for an inmate, except packages which have had prior approval by the Warden or a designated staff member. The Warden may allow a visitor to leave money with a designated staff member for deposit in the inmate's commissary account.

(4) The officer shall be aware of any articles passed between the inmate and the visitor. If there is any reasonable basis to believe that any item is being passed which constitutes contraband or is otherwise in violation of the law or Bureau regulations, the visiting room officer may examine the item.

§ 540.52 Penalty for violation of visiting regulations.

Any act or effort to violate the visiting guidelines of an institution may result in disciplinary action against the inmate, which may include the denial of future visits, possibly over an extended period of time. Moreover, criminal prosecution may be initiated against the visitor, the inmate, or both, in the case of criminal violations.

4. Subchapter D is amended by adding Part 570.

PART 570—COMMUNITY PROGRAMS

Subpart A-C—[Reserved]

Subpart D—Reimbursement by Inmates Confined in Federal Facilities Participating in Community Employment Programs

Sec.
570.50 Authorization.
570.51 Policy.
570.52 Waivers.

Authority: 5 U.S.C. 301; 18 U.S.C. 4001, 4042, 4081, 4082, 5015, 5039; 28 U.S.C. 509, 510; 28 CFR 0.95–0.99.

Subpart A-C—[Reserved]

Subpart D—Reimbursement by Inmates Confined in Federal Facilities Participating in Community Employment Programs

§ 570.50 Authorization.

Under 18 U.S.C. 4082(c)(2) the Attorney General may require a participant in a community work program to pay appropriate and reasonable costs incidental to the inmate's confinement. This policy affects only work releasees confined in federal institutions and residents in federal community treatment centers.

§ 570.51 Policy.

(a) A fully employed participant in a community work program shall pay a fixed charge of $2.00 per calendar day in reimbursement for services and supplies normally made available to inmates of federal institutions. The reimbursement contributes to the cost of services and supplies, such as lodging, meals taken at the residential facility, clothing, bedding, laundry, allowances and medical care, but excludes transportation to and from the inmate's place of work.

(b) No charge is made during the inmate's first thirty calendar days of community employment.

§ 570.52 Waivers.

(a) The Warden may waive the fixed charge for an inmate after the first thirty days when the inmate:

(1) is unemployed;

(2) has less than full-time employment (40 hour work week);

(3) lives away ("live-out") from the Center as an integral part of his program;

(4) has a verified serious need of financial assistance to his immediate family; or

(5) has a verified serious need of his own: for example, savings required for establishment of residence; specialized employment requirements (training, education, automobile, etc.).

(b) The Warden may recommend for approval of the Regional Director or designee a waiver of the fixed charge for an inmate who provides a compelling reason other than as specified in paragraph (a) of this section.

5. Subchapter D is amended by adding Subpart B to Part 571.

PART 571—RELEASE FROM CUSTODY

* * * * *

Subpart B—Pre-Release Program

Sec.
571.10 Purpose and scope.
571.11 Program responsibility.
571.12 General characteristics.

Authority: 5 U.S.C. 301; 18 U.S.C. 4001, 4042, 4081, 4082, 5015, 5039; 28 U.S.C. 509, 510; 28 CFR 0.95–0.99.

* * * * *

Subpart B—Pre-Release Program

§ 571.10 Purpose and scope.

The Bureau of Prisons recognizes that an inmate's preparation for release begins as soon as the inmate is committed to the institution. The Warden shall provide a pre-release program at both the institution and unit levels to prepare an inmate for return to the community.

§ 571.11 Program responsibility.

(a) The Warden shall delegate to a staff member the responsibility to:

(1) Coordinate the pre-release program for the entire institution;

(2) Establish outlines of inmate need areas; and

(3) Contact and schedule volunteers from the local community.

§ 571.12 General characteristics.

(a) Staff shall structure the pre-release program to make extensive use of staff, inmate, and community resources.

(b) Staff shall strongly encourage and support an inmate's participation in a pre-release program. Staff may require an inmate to participate in a specific number of pre-release sessions with other sessions on a voluntary basis. Staff shall document the inmate's participation in the pre-release program in the inmate's central file.

(c) To assist in the release process, the Warden may, in accordance with the Bureau of Prisons' rules on furloughs, grant a furlough for release preparation purposes to an inmate.

(d) Staff shall help an inmate obtain proper identification (social security card, driver's license, birth certificate, and/or any other documents needed by the inmate) prior to release.

[FR Doc. 80-19541 Filed 6-29-80; 8:45 am]
BILLING CODE 4410-05-M

federal register

Monday
June 30, 1980

Part IX

Department of Energy

Economic Regulatory Administration

Mandatory Petroleum Price Regulations; Equal Application Rule

DEPARTMENT OF ENERGY

Economic Regulatory Administration

10 CFR Part 212

[Docket No. ERA-R-80-20]

Mandatory Petroleum Price Regulations; Equal Application Rule

AGENCY: Economic Regulatory Administration, Department of Energy.

ACTION: Notice of Proposed Rulemaking and Public Hearing.

SUMMARY: The Economic Regulatory Administration (ERA) of the Department of Energy (DOE) hereby gives notice of a proposed rulemaking and public hearing regarding the equal application rule. Specifically, DOE proposes to eliminate the equal application rule with respect to retail sales of gasoline. In the alternative, DOE proposes to eliminate the equal application rule with respect to (1) all sales of gasoline, (2) retail sales of gasoline provided more increased costs are passed through in retail prices than in the weighted average price increase of other sales, or (3) all sales of gasoline provided more increased costs are passed through in retail prices than in the weighted average price increase of other sales.

DATES: Comments due 4:30 p.m. 60 days from the date this notice appears in the Federal Register. Requests to speak at San Francisco hearing by July 18, 1980, 4:30 p.m. Requests to speak at Washington, D.C. hearing by July 10, 1980, 4:30 p.m. Hearing Date: San Francisco hearing, July 22, 1980, 9:30 a.m.; Washington, D.C. hearing, July 15, 1980, 9:30 a.m.

ADDRESSES: All comments to Public Hearing Management, Docket No. ERA-R-80-20, Department of Energy, Room 2313, 2000 "M" Street, N.W., Washington, D.C. 20461. Requests to speak at San Francisco hearing to Department of Energy, Attn: Terry Osborn, 333 Market St., San Francisco, California, 94111, (415) 556-4953. Requests to speak at Washington, D.C. hearing to Office of Public Hearing Managment, Room 2313, 2000 "M" Street, N.W., Washington, D.C. 20461, (202) 653-3757.

HEARING LOCATIONS: San Francisco hearing: Golden Gate Gateway Holiday Inn, Oregon-Nevada Room, 1500 Van Ness Ave., San Francisco, California; Washington hearing: 2000 "M" Street, N.W., Room 2105, Washington, D.C. 20461.

FOR FURTHER INFORMATION CONTACT:

Robert C. Gillette (Hearing Procedures), Economic Regulatory Administration, Room 2222-A, 2000 M Street, N.W., Washington, D.C. 20461, (202) 653-3757

William L. Webb (Office of Public Information), Economic Regulatory Administration, Room 110-B, 2000 M Street, N.W., Washington, D.C. 20461, (202) 653-4055

Chuck Boehl (Regulations and Emergency Planning), Economic Regulatory Administration, Room 7302, 2000 M Street, N.W., Washington, D.C. 20461, (202) 653-3202

William Funk or William Mayo Lee (Office of General Counsel), Department of Energy, Room 6A-127, 1000 Independence Avenue, S.W., Washington, D.C. 20585, (202) 252-6736 or 252-6754.

SUPPLEMENTARY INFORMATION:

I. Background
II. Proposed Rule
III. Alternative Proposals
IV. Written Comments and Public Hearing Procedures
V. Procedural Requirements

I. Background

On July 16, 1979 (44 FR 42541, July 19, 1979), DOE issued final rules concerning the price rule for sales of motor gasoline by independent retailers. The rules adopted a different and much simplified method for retailers to calculate the maximum lawful selling price of each type or grade of gasoline. The DOE adopted similar rules for resellers and reseller-retailers effective May 1, 1980. In effect, the new price rules state that the maximum lawful selling price for each type or grade of gasoline is the acquisition cost, plus a fixed cents per gallon markup,[1] plus applicable taxes. The equal application rule with respect to independent retailers' sales and most resellers' and reseller-retailers' sales of gasoline was no longer operative and therefore was deleted.

On September 17, 1979 DOE issued a Notice of Proposed Rulemaking (44 FR 54902, September 21, 1979), concerning the equal application rule as it applied to retail sales. DOE believed the regulations, in some instances, provided a regulatory incentive for certain refiners and reseller-retailers to maintain their selling prices in retail sales of gasoline substantially below those of independent retailers.[2] This created competitive imbalances in the market place which possibly could have had serious long-term effects on the independent portion of the industry. Accordingly, on June 15, 1980, DOE issued a final rule which increased the 3 cents per gallon limitation on the difference refiners may charge between retail sales and other types of sales, without being subject to the equal application rule, to 9.3 cents per gallon. In addition, the reseller-retailer equal application rule was amended to permit reseller-retailers up to a 9.3 cents per gallon difference between increased costs which may be passed through at retail and other levels of distribution without being subject to the equal application rule.[3]

Generally, the amendments to the equal application rule allow refiners and reseller-retailers a margin increase in retail prices without permitting them an increase in their overall allowable margins. Any increases in retail prices result in compensating reductions in the prices charged in other sales or in a drawdown of "banked" costs.

Many of the comments received during the rulemaking process specifically suggested that DOE's solution would not meaningfully address the problem of price disparities at the retail level, but that the elimination of the equal application rule in its entirety with respect to all gasoline sales, or at least at the retail level, would avoid possible regulatory-induced undercutting by refiners of their independent competitors.[4] The commenters stated that the proposed changes to the equal application rule would not eliminate the requirement that the equal application rule apply *within* a class of purchaser as well as *between* classes of purchaser. In other words, firms would be deemed to recoup any increase in one retail sale on all other retail sales. Since in many instances competitive market conditions would not allow refiners to raise all their retail gasoline prices, they stated that as a practical matter in most cases they would be unable to raise any of their retail prices.

In response to those comments, DOE is issuing this Notice of Proposed Rulemaking concerning the equal

[1] Independent retailers were permitted a 16.1 fixed cents per gallon markup. Effective June 15, 1980, the 16.1 fixed cents per gallon markup limitation was increased to 16.8 cents to reflect the GNP deflator. Resellers and reseller-retailers were permitted a 7.7 fixed cents per gallon markup in resales of gasoline. Beginning June 15, 1980, this figure was increased to 8.4 cents per gallon to reflect the GNP deflator.

[2] With the adoption of the new reseller and reseller-retailer price rules, the same problem could develop at the wholesale level with respect to refiners' resales and at the retail level with respect to reseller-retailers' retail sales.

[3] Beginning May 1, 1980 the equal application rule for resellers and reseller-retailers will only apply to firms which elect to establish maximum lawful selling prices pursuant to § 212.93(a)(5). Effective June 15, 1980, the 8.6 cents was increased to 9.3 cents to reflect increases in the GNP deflator.

[4] With the adoption of new reseller and reseller-retailer price rules, the problem of price disparities may develop at the wholesale level of distribution.

application rule. Specifically DOE proposes the elimination of the equal application rule in retail sales of gasoline, or, in the alternative, elimination of the equal application rule altogether with respect to sales of gasoline. Finally, DOE is also proposing alternatives which would eliminate the equal application rule either in retail sales or in all sales of gasoline only when the increased costs passed through at retail are greater than those passed through in wholesale sales.

In proposing the partial or total elimination of the equal application rule, DOE does not intend to suggest that the equal application rule was misconceived or a mistake and that it did not serve the purposes of the Emergency Petroleum Allocation Act of 1973 (EPAA). To the contrary, DOE believes the equal application rule has played an important role in the equitable pricing of petroleum products.

The present price control system for refiners generally established as a base price, the prices paid by each class of purchaser in transactions on March 15, 1973. The base price for each class of purchaser was frozen as of that date, a time when the petroleum markets were relatively normal. In order to protect the various classes of purchasers in a price control system expected to be of short duration, increased costs were to be allocated equally to each class of purchaser and within each class of purchaser. The equal application rule plays an integral role in the method and theory of the present price control system for refiners, which is essentially to maintain the historical differentials in prices between and among classes of purchasers in order to ensure that petroleum products are distributed at equitable prices. Partial, and especially total, elimination of the equal application rule would therefore substantially alter the method and theory of the price control system by eliminating the strong incentive to maintain historical differentials. If such changes were adopted, both the class of purchaser concept and so-called transaction rule would in the future have little impact.

Three factors lead DOE to propose the partial or total elimination at this time. First, Executive Order 12044 requires all departments to review existing regulations. The equal application rule has been a regulation subjected to much discussion and some criticism and, therefore, it is appropriate for DOE to review it in light of current needs and requirements. This is especially so because, while maintaining historical differentials ensures equitable prices for a certain period of time, at some point a change in society, the economy, and the petroleum market could make the historical differentials inequitable and anomalous. Second the changes in the resellers', reseller-retailers', and retailers' price rules, which in most instances eliminated the May 15, 1973, base price plus allowable cost increases as the basis for establishing maximum lawful selling prices, as well as the equal application rule in these market sales, may make the retention of the equal application rule for refiners and certain resellers an anomaly, particularly when applied at the retail level. Third, the equal application rule tends to discourage the imposition of significant price differentials among similarly situated customers and therefore may reduce the pricing flexibility of those subject to it. In a regime of full scale and pervasive controls, such a reduction in pricing flexibility may be justified, because the conditions that make pervasive controls necessary suggest that free market competition is inadequate to allocate products equitably at equitable prices. The Administration and DOE, however, have indicated their intention to decontrol gasoline as soon as market conditions allow. The EPAA, the statutory basis for controls, expires in September 1981. With respect to crude oil, DOE has undertaken a number of regulatory actions designed to "phase in" decontrol so that ultimate decontrol will not be unnecessarily disruptive. Accordingly, it may be advisable to take certain actions with respect to the gasoline price regulations which would similarly "phase in" its decontrol. Among such possible actions would be modifications to or elimination of the equal application rule to introduce a greater degree of pricing flexibility and market competition.

As noted above, total elimination of the equal application rule would substantially alter the present price control system for refiners. While the amount of increased costs that could be added to prices would not be affected, the regulations effectively would no longer assign those costs among and between classes of purchasers. Rather the market would assign these costs.

In proposing the partial or total elimination of the equal application rule, ERA is not ignoring the EPAA mandate to ensure equitable pricing to the maximum extent practical. Instead, this proposal reflects ERA's tentative conclusion that at this time and given the current and projected petroleum stocks, and decreased demand, allocation of increased costs by market forces will result in equitable pricing, while at the same time furthering the EPAA objective of minimizing unnecessary interference with market mechanisms.

II. Proposed Rule

The proposed rule would amend the equal application rule, with respect to refiners and those reseller-retailers electing to establish maximum lawful selling prices pursuant to § 212.93(a)(5), by excepting retail sales of gasoline from the equal application rule.

The effect of such a rule would be to allow refiners and reseller-retailers to pass through greater increased costs at retail generally than at other levels, or pass through greater increased costs in some retail markets than in others, without having the differences deemed to have been recouped pursuant to the provisions of the equal application rule.

The proposed rule would not increase the potential revenues of refiners and reseller-retailers because it would not increase the total amount of allowable increased costs that could be passed through. Rather, the proposed rule would permit refiners and reseller-retailers to allocate their increased costs in a different and more flexible manner because they would not be required by the regulations to sell gasoline at prices below their independent competition. For example, if a firm does not have any "banks" of unrecouped increased costs and generally passes through greater increased costs in retail sales, it will have to diminish the increased costs passed through at other levels of distribution. In addition, if a firm passes through greater increased costs in some retailed markets, it may decrease the pass through of increased costs in other retail markets rather than diminishing the pass through at other levels of distribution.

On the other hand, if a firm has "banks" of unrecouped increased costs, it may draw down those "banks" by passing through greater increased costs in retail sales generally or in particular retail markets while not diminishing the increased costs passed through at other levels. In other words, the firm could increase its actual revenues in the short-run to the extent that market competition or other government programs, such as the Council on Wage and Price Stability (COWPS), allow (see Draft Regulatory Analysis).

Elimination of the equal application rule at the retail level, however, would remove the incentive for refiners and reseller-retailers to pass through equal amount of increased costs at each level of distribution and in each retail sale. To the extent that this flexibility could

result in undercutting by refiners and reseller-retailers of prices charged by independents, it would be inconsistent with the purpose of the proposed amendment. Nevertheless, the existing regulations may encourage refiners and reseller-retailers to sell gasoline at prices below those charged by independent retailers. Under the proposed amendment, there would be no regulatory-induced incentive for refiners or reseller-retailers to undercut their independent competition. Should firms take advantage of termination of the rule to initiate predatory pricing, which could harm the independent segment of the industry in the long-term, there are anti-trust laws that may apply in certain situations or perhaps other legislation may be appropriate. And, as discussed above, allowing the pricing flexibility provided in the proposal is a form of phasing out controls which will expire in September 1981. On balance, DOE believes that at the present time the procompetitive aspects of eliminating the equal application rule at the retail level outweigh any possible anti-competitive potential, and thus the proposal would further the purposes of the EPAA. Nevertheless, DOE is proposing in two of the alternatives in this notice a possible safeguard against price undercutting that DOE may adopt if comments convince us that the anti-competitive potential is greater than anticipated.

III. Alternative Proposals

In the alternative, DOE proposes to 1) eliminate the equal application rule with respect to all sales by refiners, resellers, and reseller-retailers, 2) eliminate the equal application rule in retail sales provided that increased costs passed through at retail are not less than at other levels of distribution, or 3) eliminate the rule for all sales of gasoline except for the retail sales in which increased costs passed through are less than at other levels of distribution. DOE reserves the authority to adopt any of the proposals, or modifications thereof, depending on the comments received.

The elimination of the equal application rule in its entirety would permit firms to allocate increased costs at the various levels of distribution without regard to historic differentials between or within classes of purchaser. In other words, firms would be free to alter the price differentials between or within classes of purchaser without being deemed to have recouped with respect to all customers the highest increased cost passed through to any customer. That is, firms could pass through much greater increased costs in some marketing areas if competition would allow it.[5] On the other hand, where supplies are generally adequate, a firm could subsidize prices in other marketing areas in order to increase its market share. Both could be problems, but, as described above, at this time and after several years experience under the equal-application rule, DOE believes it is appropriate to reassess the potential for these problems and the costs of the equal application rule in terms of pricing inflexibility and its anti-competitive effects. In this respect, DOE especially seeks the views of the Department of Justice, the Federal Trade Commission, and the Council on Wage and Price Stability.

A second alternative is to eliminate the equal application rule at the retail level, but only to the extent that increased costs passed through at retail are not less than at other levels. This would exempt from the equal application rule only those actual retail sales in which greater increased costs were passed through than were passed through in the same marketing area at other marketing levels. Under this alternative, refiners and reseller-retailers would continue to be deemed to have recouped increased costs if they reduce the pass through of increased costs in retail prices relative to other prices.

For example, if a refiner with two retail outlets in the same marketing area passes through one cent and six cents respectively, while passing through a weighted average 4 cents at wholesale, then the equal application rule would not apply with respect to sales at the station with a 6 cents pass through but would apply at the station with the 1 cent pass through. At the latter station the firm would be deemed to have recouped an additional 3 cents with respect to all volumes sold at that outlet.

A third alternative would be to eliminate the equal application rule for all sales except at retail when increased costs passed through at retail are less than the weighted average amount of increased costs passed through at other levels. As in the case of the second alternative, this could protect independent marketers by providing a disincentive for refiners and reseller-retailers from passing through less costs at retail than at other levels of distribution, but would also promote competition at other levels of distribution.

[5] At retail this could not occur because refiner and reseller-retailers are limited in the amount of increased costs which may be passed through in retail sales. *See* § 212.83(c)(1)(i)(C) and § 212.93(b)(v). However, it could occur at other marketing levels.

Under each alternative the 9.3 cents differential permitted between retail sales and other sales in the current rules would be eliminated. Also, the 3 cents differential currently permitted between PADD's would no longer apply.

IV. Written Comment and Public Hearing Procedures

A. *Written Comments.* You are invited to participate in this notice or rulemaking by submitting data, views or arguments with respect to the issues set forth in this Notice. Comments should be identified on the outside envelope and on documents submitted with the designation "Equal Application Rule" Docket No. ERA-R-80-20. Ten copies should be submitted. All comments received will be available for public inspection in the DOE Freedom of Information Office, Room GA-145, James Forrestal Building, 1000 Independence Avenue, S.W., Washington, D.C., between the hours of 8:00 a.m. and 4:30 p.m., Monday through Friday. Comments regarding the proposed amendments should be received on or before August 29, 1980.

B. *Public Hearing.* 1. *Procedure for Requesting Participation.* The times and places for the hearings are indicated in the "Dates" and "Addresses" section of this Notice. If necessary to present all testimony, hearings will be continued at 9:30 a.m., on the next business day following the first day of the hearing.

You may make a written request for an opportunity to make an oral presentation at the hearings. The requests should contain a phone number where you may be contacted through the day before the hearing.

We will notify each person selected to be heard at the Washington, D.C hearing before 4:30 p.m., July 7, 1980, and at the San Francisco hearing before 4:30 p.m, July 18, 1980. Persons scheduled to speak at the hearings are requested to bring 100 copies of their statement to San Francisco on the date of the hearing and to Room 300A, Federal Building, 12th and Pennsylvania Avenue, N.W., Washington, D.C. 20461, by 4:30 p.m., July 14, 1980, for the Washington hearing.

2. *Conduct of the Hearing.* We reserve the right to select the persons to be heard at the hearing, to schedule their respective presentations, and to establish the procedures governing the conduct of the hearing. The length of each presentation may be limited, based on the number of persons requesting to be heard.

A DOE official will be designated to preside at the hearings, which will not be judicial in nature. Questions may be asked only by those conducting the

hearing. At the conclusion of all initial oral statements, each person who has made an oral statement will be given the opportunity to make a rebuttal statement. The rebuttal statements will be given in the order in which the initial statements were made and will be subject to time limitations.

You may submit questions to be asked by the presiding officer of any person making a statement at the hearings. Such questions should be submitted to the address indicated above for requests to speak, for the location concerned, before 4:30 p.m. on the day prior to the hearing. If at the hearing you decide that you would like to ask a question of a witness, you may submit the question, in writing, to the presiding officer. In either case the presiding officer will determine whether the question is appropriate and if the time limitations permit it to be presented for a response.

Any further procedural rules needed for the proper conduct of a hearing will be announced by the presiding officer.

Transcripts of the hearings will be made, and the entire record of the hearings, including the transcripts, will be retained by the DOE and made available for inspection at the Freedom of Information Office, Room GA-145, James Forrestal Building, 1000 Independence Avenue, S.W., Washington, D.C., between the hours of 8 a.m. and 4:30 p.m., Monday through Friday. Any person may purchase a copy of the transcript from the reporter.

In the event that it becomes necessary for us to cancel a hearing, we will make every effort to publish advance notice in the Federal Register of such cancellation. Moreover, we will give actual notice to all persons scheduled to testify at the hearings. However, it is not possible to give actual notice of cancellations or changes to persons not identified to us as participants. Accordingly, persons desiring to attend a hearing are advised to contact DOE on the last working day preceding the date of the hearing to confirm that it will be held as scheduled.

V. Procedural Requirements

A. *Section 7 of the FEA Act*

Under section 7(a) of the Federal Energy Administration Act of 1974 (15 U.S.C. § 787 *et seq.*, Pub. L. 93275, as amended), the requirements of which remain in effect under section 501(a) of the DOE Act, the delegate of the Secretary of Energy shall, before promulgating proposed rules, regulations, or policies affecting the quality of the environment, provide a period of not less than five working days during which the Administrator of the Environmental Protection Agency (EPA) may provide written comments concerning the impact of such rules, regulations, or policies on the quality of the environment. Such comments shall be published together with publication of notice of the prosposed action. The Administrator commented that he does not foresee these actions having an unfavorable impact on the quality of the environment as related to the duties and responsibilities of the EPA.

B. *Section 404 of the DOE Act*

Pursuant to the requirements of section 404(a) of the Department of Energy Organization Act ("DOE Act" Pub. L. 95-91), this proposed rule has been referred, concurrently with the issuance hereof, to the Federal Energy Regulatory Commission for a determination as to whether the proposed rule might significantly affect any function within the Commission's jurisdiction under section 402(c) of the DOE Act. The Commission will have until the scheduled close of the public comment period on the proposal, to make such determination.

C. *Regulatory Analysis*

A regulatory analysis as required for proposed rulemakings pursuant to Executive Order 12044, entitled "Improving Government Regulations" (43 FR 12661, March 24, 1978) and DOE's implementing procedures, has been prepared by ERA. A summary of the proposed regulatory analysis is set forth as an appendix to this notice. The proposed regulatory analysis is available at ERA's Office of Public Information, Room B-210, 2000 "M" Street, N.W., Washington, D.C. You are invited to comment on the proposed regulatory analysis.

(Emergency Petroleum Allocation Act of 1973, 15 U.S.C. § 751 *et seq.*, Pub. L. 93-159, as amended, Pub. L. 93-511, Pub. L. 94-99, Pub. L. 94-133, Pub. L. 94-163, and Pub. L. 94-385; Federal Energy Administration Act of 1974, 15 U.S.C. § 787 *et seq.*, Pub. L. 93-275, as amended, Pub. L. 94-332, Pub. L. 94-385, Pub. L. 95-70, and Pub. L. 95-91; Energy Policy and Conservation Act, 42 U.S.C. § 6201 *et seq.*, Pub. L. 94-163, as amended, Pub. L. 94-385, and Pub. L. 95-70; Department of Energy Organization Act, 42 U.S.C. § 7101 *et seq.*, Pub. L. 95-91; E.O. 11790, 39 FR 23185; E.O. 12009, 42 FR 46267.)

In consideration of the foregoing, Part 212 of Chapter II, Title 10 of the Code of Federal Regulations, is proposed to be amended as set forth below.

Issued in Washington, D.C., June 24, 1980.

Hazel R. Rollins,

Administrator, Economic Regulatory Administration.

1. Section 212.83(h)(2)(iv) is revised to read as follows:

§ 212.83 Price rule.

* * * * *

(h) *Equal application among classes of purchaser.*

* * * * *

(2) *Special rules.*

* * * * *

(iv) *Retail sales of gasoline by refiners.* Retail sales of gasoline are not subject to the provisions of paragraph (1) of this section.

* * * * *

2. Section 212.93(e)(1) is revised to read as follows:

§ 212.93 Price rule.

* * * * *

(e) Notwithstanding the provisions of subparagraph (a)(1) of this section:

(1)(i) except in sales of gasoline unless the gasoline is priced pursuant to subparagraph (a)(5) of this section: if a seller charges prices for a particular product that result in the recoupment of less total revenues than the total amount of increased product costs of that product incurred during the month, the amount of increased product costs not recouped by a price adjustment in the subsequent month pursuant to paragraph (a) of this section may also be added to the May 15, 1973, selling prices of that product in a subsequent month at the time the selling prices are computed pursuant to paragraph (a). A seller shall calculate its amount of increased product cost of a particular product not recouped, since the most recent price increase after November 1, 1973, to include the following: (A) any "increased product costs" not added to the May 15, 1973, selling price at the time of the most recent price increase implemented after November 1, 1973, multiplied by the volume sold since that price increase, plus (B) increases in the weighted average unit cost above the weighted average unit cost which was used to calculate the most recent price increase implemented after November 1, 1973, multiplied by the volume of product purchased at each such increased product cost, less, (C) any decrease in the weighted average unit cost from the weighted average unit cost which was used to calculate the most recent price increase implemented after November 1, 1973, multiplied by the volume of product purchased at each such lesser cost.

(ii) With respect to sales of gasoline by resellers and reseller-retailers which establish maximum lawful selling prices in other than retail sales pursuant to paragraph (a)(5) of this section and sales of other covered products, when a seller calculates its amount of increased product costs not recouped under this paragraph, it shall calculate its revenues as though the greatest amount of

increased product costs actually added to the May 15, 1973 selling price of that covered product and included in the price charged to any class of purchaser had been added in the same amount to the May 15, 1973 selling price of such covered product and included in the price charged to each class of purchaser; except that, where an equal amount of increased product cost is not included in the price charged to a purchaser because of (A) a price term of a written contract covering the sale of such product which was entered into on or before September 1, 1974, or (B) the provisions in paragraph (b)(1)(iv), such portion of the increased product costs not included in the price charged to such a purchaser need not be included in the calculation of revenues.

* * * * *

§ 212.83 [Amended]

Alternative Proposal I

1. Section 212.83(h) is deleted.

§ 212.93 [Amended]

2. Section 212.93(e)(1)(ii) is deleted.

Alternative Proposal II

1. Section 212.83(h)(2)(iv) is revised to read as follows:

§ 212.83 Price rule.

* * * * *

(h) *Equal application among classes of purchaser.*

* * * * *

(2) *Special rules.*

* * * * *

(iv) *Retail sales of gasoline by refiners.* (A) A particular retail sale is not subject to the provisions of paragraph (1) of this section when the amount of increased costs added to the particular May 15, 1973 selling price of gasoline at retail is equal to or greater than the weighted average amount of increased costs added to the May 15, 1973 selling price of gasoline at other than retail.

(B) When the amount of increased costs added to a particular May 15, 1973 selling price of gasoline at retail is less than the weighted average amount of increased costs added to the May 15, 1973 selling price of gasoline at other than retail, a refiner shall calculate increased costs for those sales as though the greatest amount of increased costs actually added to any May 15, 1973, selling price of gasoline and included in the price charged to any class of purchaser had been added to the May 15, 1973, selling price of that gasoline and included in the price charged in that retail sale.

(C) When a firm calculates the amount of increased costs not recouped that may be added to the May 15, 1973 selling price of gasoline to compute maximum allowable prices in a subsequent month, it may notwithstanding the general rule in subparagraph (1) above, with respect to retail sales of gasoline, include the amount by which the greatest amount of increased costs actually added to any May 15, 1973 selling price of gasoline to any class of purchaser exceeds the amount of increased costs which could have been added to the May 15, 1973 selling price in retail sales of gasoline but for the limitation in § 212.83 (c)(1)(i)(C).

* * * * *

2. Section 212.93(e)(1) is amended to add a new subparagraph (iii) to read as follows:

§ 212.93 Price rule.

* * * * *

(e)

* * * * *

(1)

* * * * *

(iii) When the amount of increased costs added to a specific May 15, 1973 selling price of gasoline at retail is equal to or greater than the weighted average amount of increased costs added to any May 15, 1973 selling price of gasoline in sales other than retail, such retail sale of gasoline is not subject to the provisions of subparagraph (e)(1)(ii) of this section.

* * * * *

Alternative Proposal III

1. Section 212.83(h)(2) (i) and (iv) are revised to read as follows:

§ 212.83 Price Rule.

* * * * *

(h) *Equal application among classes of purchaser.*

* * * * *

(2) *Special rules.*

* * * * *

(i) Sales of gasoline are not subject to the provisions of subparagraph (h)(i) of this paragraph except as provided in subparagraph (h)(2)(iv) of this paragraph.

* * * * *

(iv) *Retail sales of gasoline by refiners.* (A) A particular retail sale is not subject to the provisions of paragraph (1) of this section when the amount of increased costs added to the particular May 15, 1973, selling price of gasoline at retail is equal to or greater than the weighted average amount of increased costs added to the May 15, 1973, selling price of gasoline at other than retail.

(b) When the amount of increased costs added to a particular May 15, 1973, selling price of gasoline at retail is less than the weighted average amount of increased costs added to the May 15, 1973, selling price of gasoline at other than retail, a refiner shall calculate increased costs for those sales as though the greatest amount of increased costs actually added to any May 15, 1973, selling price of gasoline and included in the price charged to any class of purchaser had been added to the May 15, 1973, selling price of that gasoline and included in the price charged in that retail sale.

(C) When a firm calculates the amount of increased costs not recouped that may be added to the May 15, 1973, selling price of gasoline to compute maximum allowable prices in a subsequent month, it may notwithstanding the general rule in subparagraph (1) above, with respect to retail sales of gasoline, include the amount by which the greatest amount of increased costs actually added to any May 15, 1973, selling price of gasoline to any class of purchaser exceeds the amount of increased costs which could have been added to the May 15, 1973, selling price in retail sales of gasoline but for the limitation in § 212.83(c)(1)(i)(C).

* * * * *

2. Section 212.93(e)(1) is amended to add a new subparagraph (iii) to read as follows:

§ 212.93 Price rule.

* * * * *

(e) * * *

* * * * *

(1) * * *

* * * * *

(iii) Sales of gasoline are not subject to the provisions in subparagraph (ii) except when the amount of increased costs added to a specific May 15, 1973, selling price of gasoline at retail is less than the weighted average amount of increased costs added to any May 15, 1973, selling price of gasoline in sales other than retail.

* * * * *

Appendix—Petroleum Price Regulations, Regulations and Emergency Planning, June 1980

Draft—Regulatory Analysis of Proposed Changes in the Equal Application Rule for Motor Gasoline

Summary

Retention of the Present Rule

Because the amount of passthrough of increased costs is generally deemed to be equal within and between marketing levels under the current Equal Application Rule (Rule), the volume sold at one level of distribution and the market conditions at that level could be the determining factor for the cost passthrough at all levels of distribution. For example, if 90% of a seller's market was at wholesale and the remaining 10%, perhaps in another marketing area, was at retail, the seller's wholesale market conditions could determine the amount of the allowable increased costs passed through at both wholesale and retail. If wholesale demand is weak, the retail price would be lower than it might be without the Rule. At retail, the Rule may result in integrated marketers maintaining pump prices substantially below those that can be charged by independent retailers purchasing gasoline from them and, moreover, can result in refiners having prices, in a PAD District, that there are perhaps 6 or more cents above or below the local market level. To the extent the refiner's pump price is below the local market, this contributes to gasoline lines forming at their stations, is an unnecessary waste of fuel, confuses the consumer, and is inequitable.

At the other levels of distribution the Rule may provide additional protection from price discrimination, but it also could prevent adjustments for market demand and changing business practices over the last 7 years and may continue to preserve price anomalies that existed on May 15, 1973.

Eliminating Equal Application for Retail Sales

Elimination of the Rule at retail is widely supported by all segments of the industry, including the independent retail dealters, who complain of unfair price competition by refiner-owned stations that directly results from the regulation.

This regulatory change would eliminate the equal application rule with respect to retail sales of gasoline by refiners and by reseller-retailers who have not adopted the standard fixed cents per gallon margin pricing system effective May 1, 1980. The one restriction would be that the retail prices of reseller-retailers could be no higher than their Dealer Tankwagon price to the nearest independent retailer plus the markup allowed independent retailers. This would allow the passthrough of additional increased costs in retail sales and permit marketers to raise or lower retail prices at the individual retail stations operated by the marketer, within that limit, to reflect local market conditions without incurring the equal application penalty.

Under the proposed amendment, marketers would have pricing flexibility to use allowable increased costs, to the extent they are available, to charge competitive prices without penalty. There will be no actual increase in allowable costs that may be passed through, because increased costs used at retail will result in a reduction in the allowable increased costs available for use at other marketing levels or in the firm's banks.

This amendment will result in motorists being less confused by price variations in the locality. This would reduce possible lines at the least costly stations and minimize the possibility that motorists would travel greater distances than necessary to secure lower cost gasoline. It would also allow independent retailers to be more competitive as they would not be required to lower their prices or increase their hours of operation to retain customers.

Elimination of the Equal Application Rule

Generally, this proposal approximates a free market situation, except that prices would still be constrained by the amount of increased costs incurred. Unrecovered increased costs could still be banked for possible future recovery, but that potential recovery could still be less than allowed by free market prices in a shortage situation.

The major advantage of this proposal is that it would allow refiners and applicable reseller-retailers and resellers to adjust their pricing practices which have been relatively frozen since May 15, 1973, at all wholesale and retail levels. It would allow marketers to make adjustments to reflect changes in the types of marketing operations in which its customers are engaging, *e.g.*, increased sales to other than regular customers. Adjustments also could be made to correct any anomalies that happened to exist on that base date. Additionally, it would allow marketers greater pricing flexibility and thus be competitive at all levels of distribution. This will allow other marketers who are their customers (especially retail dealers) to be more competitive in the marketplace.

For example, the Rule has perpetuated for almost 7 years special circumstances that existed in cargo (barge) prices at the major distribution center of New Orleans, Louisiana. Because of a tight gasoline supply situation on May 15, 1973, refiners were charging cargo buyers, usually large independent marketers, prices based on spot market costs. Those prices closely approximated the dealer tankwagon prices charged to retailers. Thus, as long as price controls have been in effect, the Rule has kept cargo prices at New Orleans unnecessarily high and independent marketers have been disadvantaged by this situation. Also it may be contrary to the purposes of certain anti-trust laws.

A number of price adjustments will almost certainly be made following deregulation. Allowing them to occur prior to that time will create less turmoil in the post-deregulation market. It will also be easier to identify and correct any serious inequities that might occur while price controls are still in effect rather than after they have expired.

Elimination of the Equal Application Rule at the Retail Level to the Extent Prices Are Increased More Than the Weighted Average of Wholesale Prices

This proposal would discourage refiners from attempting to recover more increased allowable costs from wholesale customers than from retail customers. To the extent that retail sales are more costly because of the lower volume of individual sales or the higher expenses, the alternative would probably not be restrictive. There could be instances, however, where the cost of wholesale sales might exceed the cost of a retail sale, which would result in a transfer of costs to retail customers to prevent being subject to the Rule. In addition, if there should be an oversupply of gasoline in an area where the marketer has retail outlets, the supply/demand situation in another area where the marketer's wholesale operations are located could effectively prevent a reduction in the retail price.

As with other options of this type, this alternative tends to preserve any anomalies in the May 15, 1973, pricing of products and to discourage any price adjustments appropriate due to changes in the cost of supplying particular customers.

Elimination of the Equal Application Rule at All Levels to the Extent Retail Prices are Increased More Than Wholesale Prices

The third alternative would allow different passthroughs of allowable increased costs to various wholesale and different retail customers without the Rule's penalty, but the Rule's imputed cost recovery would apply in any instances where the marketer passes through less increased costs to a retail customer than the weighted average passthrough to other classes of purchasers. Thus, there would be a disincentive for refiners to lower prices at their own retail outlets in order to increase their market share.

To the extent refiners increase their own retail prices more than their other prices, it would benefit their reseller customers and independent retailers with whom the refiner-retailer is competing. The independent retailer could increase its selling price and still be competitive, while the independent reseller would have a lower cost for gasoline from the refiner and thus be more competitive.

Banked Costs

In assessing the potential impact of modifying or eliminating the Rule under each of the alternatives, there should be consideration of whether refiners would draw down their previously unrecovered increased costs ("banks") at a faster rate than otherwise would occur. In February 1980, total banks for all refiners amounted to $7.8 billion, double the level during the period up to the first quarter in 1979. Banks attributable only to motor gasoline for all refiners increased from $2.2 to $6.5 billion over the same period of time.[1]

It is important to note that there is no constant correlation between an individual refiner's level of banks and that refiner's gasoline prices. For example, several refiners with high banks have average cost passthroughs and prices.

Some refiners are currently unable to raise prices because of competition. That is, supply

[1] EIA, *Weekly Petroleum Status Report*, May 30, 1980, Pg. 7.

is plentiful and demand is down. There most likely would be some impact on prices, however, within particular market areas. Where refiners' retail and dealer tankwagon costs had been constraining independent dealers' gasoline prices, there may be increases. However, to the extent that refiners are constrained by Council on Wage and Price Stability (COWPS) guidelines in passing through increased costs, the impact will be minimal (when they go up in one area, they may go down in another or increases to one class of customer may be balanced by decreases to another). Any such decreases in prices would tend to require competing independent dealers to reduce their prices.

In summary, the banks of prior increased costs partially represent crude oil and gasoline stocks and will be retained for use when stocks are eventually sold. In part, they represent voluntary compliance with COWPS guidelines restricting profit margins. Neither circumstances would be changed by the proposed regulation. This assumption is further supported by refiners with prices appreciably below market levels having sizable banks of increased costs. Some possibility exists, however, that a small portion of banked sosts could be used to make market adjustments in certain areas.

Conclusion

Our conclusion, subject to revision based on testimony, written comments and additional study, is that current market conditions allow elimination of the Rule and that doing so will have no adverse economic effect on the industry or the consuming public.

[FR Doc. 80-19589 Filed 6-27-80; 9:01 am]

BILLING CODE 6450-01-M