7-3-80
Vol. 45 No. 130
Pages 45247-45564

federal register

Thursday
July 3, 1980

Highlights

45247 **Registration Under the Military Selective Service Act** Presidential proclamation

45249 **National Porcelain Act Month** Presidential proclamation

45374 **Grant Programs—Health** HHS/HDSO announces acceptance of applications on aging from State units and area agencies under the Model Projects on Aging Program; apply by 8-25-80

45338 **Grant Programs—Science and Technology** Commerce/NOAA solicits competitive applications for participation in research for ground-based measurements of solar variability; apply by 8-5-80

45281 **Minority Businesses** DOT releases rule creating a minority business enterprise program for DOT financial assistance programs

45377 **Maternal and Child Health** HHS issues general position notice concerning grantees of funds under the Maternal and Child Health/Crippled Children's (MCH/CC) Program

45303 **Banks and Banking** Depository Institutions Deregulation Committee proposes to adopt rules concerning maximum rate of interest payable on interest-bearing transaction accounts; comments by 8-4-80

CONTINUED INSIDE

Highlights

FEDERAL REGISTER Published daily, Monday through Friday, (not published on Saturdays, Sundays, or on official holidays), by the Office of the Federal Register, National Archives and Records Service, General Services Administration, Washington, D.C. 20408, under the Federal Register Act (49 Stat. 500, as amended; 44 U.S.C. Ch. 15) and the regulations of the Administrative Committee of the Federal Register (1 CFR Ch. I). Distribution is made only by the Superintendent of Documents, U.S. Government Printing Office, Washington, D.C. 20402.

The Federal Register provides a uniform system for making available to the public regulations and legal notices issued by Federal agencies. These include Presidential proclamations and Executive Orders and Federal agency documents having general applicability and legal effect, documents required to be published by Act of Congress and other Federal agency documents of public interest. Documents are on file for public inspection in the Office of the Federal Register the day before they are published, unless earlier filing is requested by the issuing agency.

The Federal Register will be furnished by mail to subscribers, free of postage, for $75.00 per year, or $45.00 for six months, payable in advance. The charge for individual copies is $1.00 for each issue, or $1.00 for each group of pages as actually bound. Remit check or money order, made payable to the Superintendent of Documents, U.S. Government Printing Office, Washington, D.C. 20402.

There are no restrictions on the republication of material appearing in the Federal Register.

Questions and requests for specific information may be directed to the telephone numbers listed under INFORMATION AND ASSISTANCE in the READER AIDS section of this issue.

45257 **Banks and Banking** FRS revises an interpretation that defines terms used to describe the competitive effects of proposed mergers; effective 6-11-80

45419 **Manpower Training Programs** Labor/ETA intends to reallocate funds under Title II-D of the Comprehensive Employment and Training Act (CETA); comments by 8-4-80

45257 **Campaign Funds** FEC releases July 3, 1980, as the effective date for suspension of primary matching fund payment ruling

45554 **Regulatory Reform and Review** SEC publishes list on certain regulatory matters and related information; comments by 10-1-80 (Part III of this issue)

45381 **Privacy Act Documents** Interior/Sec'y

45270 **Cable Systems** Library of Congress/Copyright Office prescribes various conditions under which cable systems may obtain a compulsory license to retransmit copyright works; effective 7-1-80

45524-45526, 45528, 45529, 45534, 45545 **Interstate Commerce** ICC publishes rules governing procedures on motor carrier entry; various effective dates (8 documents) (Part II of this issue)

45334 **Marine Safety** DOT/NHTSA request comments concerning the establishment of higher levels of performance for boat trailer lamps; comments by 10-1-80

45269 **Marine Safety** DOT/CG revises requirements for boat operators to carry visual distress signals; effective 1-1-81

45278 **Marine Safety** DOT/CG amends approval specification for hand red flare distress signals; effective 10-1-80

45336 **Motor Vehicles** DOT/NHTSA grants petition to commence rulemaking proceeding to establish safe entry and exit requirements for commercial vehicles

45322 **Environmental Protection** EPA publishes proposed rules regarding electroplating point source category effluent guidelines and standards; comments by 9-2-80

45449 **Sunshine Act Meetings**

Separate Parts of This Issue

45524 **Part II, ICC**
45554 **Part III, SEC**

Contents

Federal Register
Vol. 45, No. 130
Thursday, July 3, 1980

The President
PROCLAMATIONS
45249 Porcelain Month, National (Proc. 4772)
45247 Selective Service Act, Military, registration under (Proc. 4771)

Executive Agencies

Actuaries, Joint Board for Enrollment
NOTICES
Meetings:
45419 Actuarial Examinations Advisory Committee

Agricultural Marketing Service
RULES
45301 Lemons grown in Ariz. and Calif.
45252 Nectarines grown in Calif.
45251 Oranges, grapefruit, tangerines, and tangelos grown in Fla.
45252 Oranges (Valencia) grown in Ariz. and Calif.
PROPOSED RULES
Milk marketing orders:
45302 Memphis, Tenn., etc.

Agriculture Department
See Agricultural Marketing Service; Forest Service.

Air Force Department
NOTICES
Meetings:
45342 Air University Board of Visitors

Blind and Other Severely Handicapped, Committee for Purchase from
NOTICES
45342 Procurement list, 1980; additions and deletions (2 documents)

Civil Aeronautics Board
NOTICES
Hearings, etc.:
45338 Competitive marketing of air transportation
45338 Former large irregular air service investigation (2 documents)

Coast Guard
RULES
Boating safety:
45269 Equipment requirements; hand red flares as visual distress signals
Lifesaving equipment:
45278 Distress signals; hand red flares, heptane ignition test
Safety zones:
45269 Lower Hudson River, N.Y.
PROPOSED RULES
Dangerous cargoes:
45327 Unmanned barges carrying bulk cargoes
NOTICES
Bridges, highway; proposed construction:
45444 Green River, Kent, Wash.; intent to prepare environmental statements

Commerce Department
See International Trade Administration; National Oceanic and Atmospheric Administration.

Copyright Office, Library of Congress
RULES
45270 Cable systems; compulsory license to retransmit copyrighted works

Defense Department
See Air Force Department; Engineers Corps.

Depository Institutions Deregulation Committee
PROPOSED RULES
Interest on deposits:
45303 Transaction accounts; ceiling rates

Economic Regulatory Administration
PROPOSED RULES
Powerplant and industrial fuel use:
45303 Alternate fuel use; calculation of cost; hearing change
NOTICES
Canadian allocation program:
45347 Crude oil, July through September
Consent orders:
45348 Ditmas Oil Associates et al.
Natural gas; fuel oil displacement certification applications:
45346 Public Service Electric & Gas Co.
Powerplant and industrial fuel use; existing powerplant or installation; classification requests:
45345 Jones & Laughlin Steel Corp.

Education Department
NOTICES
Meetings:
45344 Extension and Continuing Education National Advisory Council

Employment and Training Administration
NOTICES
Comprehensive Employment and Training Act programs:
45419 Reallocation of funds; prime sponsors

Energy Department
See also Economic Regulatory Administration; Energy Research Office; Southeastern Power Administration.
NOTICES
Meetings:
45349 Interagency Geothermal Coordinating Council
45345 Ocean thermal energy conversion (OTEC) pilot plant; program opportunity notice

Energy Research Office
NOTICES
Meetings:
45349 Energy Research Advisory Board

Engineers Corps
NOTICES
Environmental statements; availability, etc.:
45343 Columbia River navigation channel and Cowlitz and Toutle River basins; remedial dredging and corrective measures
45343 Golden Gate Estates, Collier County, Fla.; hydrologic restoration
45344 Stillaguamish River basin, Stanwood, Wash.; flood damage reduction project
Harbor maintenance curtailment; dredging deferred:
45342 Bolles Harbor, Mich.
45343 Grand Traverse Bay Harbor, Mich., etc.

Environmental Protection Agency
RULES
Air quality implementation plans; approval and promulgation; various States, etc.:
45275 Maryland
Air quality implementation plans; delayed compliance orders:
45277 Pennsylvania; correction
PROPOSED RULES
Air quality implementation plans; approval and promulgation; various States, etc.:
45314 Indiana
45318 Wisconsin
Water pollution; effluent guidelines for point source categories:
45322 Electroplating
NOTICES
Air pollution control, new motor vehicles and engines:
45356 California pollution control standard, gasoline-powered motor vehicles; fuel tank fill pipe and opening; hearings
45357 California pollution control standard, light and medium duty trucks; nitrogen oxide emission standards; petition from AMC; reconsideration of waiver and hearings
45359 California pollution control standard, passenger cars; nitrogen oxide emission standard; petition from AMC; waiver of Federal preemption and hearings
Environmental statements; availability, etc.:
45351 Agency statements; review and comment
45361 Central Contra Costa Sanitary District, Calif.; withdrawal
45370 Jewett Mine and Limestone Electric Generating Station, Tex.
45369 Las Cruces, N. Mex.; wastewater treatment facilities construction and design
Meetings:
45362 FIFRA Scientific Advisory Panel
Pesticide registration, cancellation, etc.:
45362 Lindane; rebuttable presumption against registration; preliminary notice of determination and availability of position document

Federal Aviation Administration
RULES
Airworthiness directives:
45263 AVCO Lycoming
45263 Boeing
45258 DeHavilland
45257 Piper
45258 Semco and Challenger
45264 Societe Nationale Industrielle Aerospatiale
45265, 45267 Control zones (2 documents)
45268 Jet routes
45265–45268 Transition areas (5 documents)
PROPOSED RULES
45305 Terminal control areas; informal airspace; meetings; St. Louis, Mo.
45305–45310 Transition areas (7 documents)
NOTICES
Meetings:
45445 Aeronautics Radio Technical Commission (2 documents)

Federal Communications Commission
NOTICES
45370, 45371 AM broadcast applications accepted for filing and notification of cut-off date (2 documents)

Federal Deposit Insurance Corporation
NOTICES
45449 Meetings; Sunshine Act (3 documents)

Federal Election Commission
RULES
Presidential election campaign fund and primary matching fund:
45257 Candidate eligibility; payment suspension for exceeding expenditure limitations; effective date
NOTICES
45450 Meetings; Sunshine Act

Federal Emergency Management Agency
NOTICES
45371 Senior Executive Service Performance Review Board; membership

Federal Highway Administration
NOTICES
Environmental statements; availability, etc.:
45446 Hartford County, Conn.; intent to prepare
45447 Montague County, Tex.; intent to prepare
45446 Prince of Wales Island, Alaska; intent to prepare
Meetings:
45445 Energy impact assessment panel discussion; republication

Federal Maritime Commission
RULES
Practice and procedure:
45280 Pleadings in formal proceedings, copy requirements
NOTICES
Freight forwarder licenses:
45371 Behring International, Inc.
45450 Meetings; Sunshine Act

Federal Mine Safety and Health Review Commission
NOTICES
45450 Meetings; Sunshine Act

Federal Railroad Administration
NOTICES
Meetings:
45447 Minority Business Resource Center Advisory Committee

Federal Reserve System
RULES
Bank holding companies (Regulation Y):
45257 Proposed mergers, definition of competitive effects; interpretation
PROPOSED RULES
45303 Reserves of member banks (Regulation D); correction
NOTICES
Applications, etc.:
45372 Citizen's National Corp.
45372 Howland Bancshares, Inc.
45372 Northern Kentucky Bancshares, Inc.
45373 South Holland Bancorp, Inc.
45373 Spring Grove Investments, Inc.
45450 Meetings; Sunshine Act

Fiscal Service
NOTICES
Surety companies acceptable on Federal bonds:
45448 First General Insurance Co.

Fish and Wildlife Service
RULES
Hunting:
45289 Arrowwood National Wildlife Refuge et al., N. Dak.
NOTICES
Pipeline applications:
45380 Sevilleta National Wildlife Refuge, N. Mex.

Forest Service
NOTICES
Environmental statements; availability, etc.:
45337 Chippewa National Forest, land and resource management plan, Minn.
45337 Medicine Bow National Forest, Thunder Basin National Grassland, coal unsuitability criteria, Wyo.
45337 Tonto National Forest, Lower Salt River Recreational Area, land and resource management plan, Ariz.
Meetings:
45338 Medicine Bow National Forest Grazing Advisory Board

General Accounting Office
NOTICES
45373 Regulatory reports review; proposals, approvals, violations, etc. (ICC)

Geological Survey
NOTICES
Outer Continental Shelf; oil, gas, and sulphur operations; development and production plans:
45381 Chevron U.S.A. Inc.

Health, Education, and Welfare Department
See Health and Human Services Department.

Health and Human Services Department
See Health Resources Administration; Health Services Administration; Human Development Services Office; Public Health Service.

Health Resource Administration
NOTICES
Meetings; advisory committees:
45374 July and September
45374 August

Health Services Administration
NOTICES
Grants availability, etc.:
45377 Maternal and child health/crippled children's services program; third-party reimbursement; policy statement

Human Development Services Office
NOTICES
Grant applications and proposals; closing dates:
45374 Aging program; model projects

Interior Department
See also Fish and Wildlife Service; Geological Survey; Land Management Bureau; Surface Mining Office.
NOTICES
45381 Privacy Act; systems of records

Internal Revenue Service
PROPOSED RULES
Income taxes:
45311 Corporations; treatment of interests as stock or indebtedness; extension of time and hearing

International Trade Administration
NOTICES
Meetings:
45338 Exporters' Textile Advisory Committee

Interstate Commerce Commission
RULES
Motor carriers:
45524 Agricultural cooperative exemption
45528 Common and contract carriers; dual operations policy, removal
45526 Intercorporate hauling operations; interim rule and request for comments
45525 Temporary authority and emergency temporary authority rules, duration
Practice and procedure:
45529 Motor carrier application procedures; interim rule and request for comments
45534 Operating authority application procedures; interim rule and request for comments
Railroad car service orders; various companies:
45288 Denver & Rio Grande Western Railroad Co.
45288 Tippecanoe Railroad Co.
45289 Transkentucky Transportation Railroad Co., Inc.
PROPOSED RULES
Motor carriers:
45545 For-hire carriers; easing of licensing requirements and establishment of zone of reasonableness of rates; discontinuance of rulemaking procedure
45545 Operating authority; acceptable forms of request; policy statement

NOTICES
Motor and rail carriers:
45410 Carrier-affiliated shippers' agents, status; declaratory order proceeding
Motor carriers:
45411 Household goods, used; transportation for DOD pack-and-crate operation; special certificate letter
45382 Permanent authority applications
45411, 45416 Transportation of Government traffic; special certificate letter (2 documents)

Justice Assistance, Research and Statistics Office
PROPOSED RULES
45311 National Environmental Policy Act; implementation; inquiry

Justice Department
See Justice Assistance, Research and Statistics Office.

Labor Department
See Employment and Training Administration.

Land Management Bureau
NOTICES
Exchange of public lands for private land:
45378 New Mexico
Meetings:
45378 Butte District Grazing Advisory Board
45380 Outer Continental Shelf Advisory Board
45378 Roswell District Grazing Advisory Board
Motor vehicles, off-road, etc.; area closures:
45380 California
45378 Oregon; correction
Withdrawal and reservation of lands; proposed, etc.:
45379 California
45379 Oregon

Library of Congress
See Copyright Office, Library of Congress.

Management and Budget Office
NOTICES
45433 Agency forms under review

National Highway Traffic Safety Administration
RULES
Motor vehicle safety standards:
45287 Lamps, reflective devices and associated equipment; side marker lamps photometric requirements
PROPOSED RULES
Motor vehicle safety standards:
45336 Commercial vehicles; safe entry and exit requirements; rulemaking petition granted
45334 Lamps, reflective devices and associated equipment; boat trailer lamps test procedures; request for comments on rulemaking petition

National Oceanic and Atmospheric Administration
RULES
Fishery conservation and management:
45291 Atlantic mackerel
45296 Atlantic squid
PROPOSED RULES
Fishery conservation and management:
45336 Atlantic groundfish; development of interim plan; meetings; correction
NOTICES
Grants; availability, etc.:
45338 Ground-based measurements of solar variability research program
Meetings:
45339 Mid-Atlantic Fishery Management Council
45340 Outer Continental Shelf; oil and gas exploration, development, or production; Fishermen's Contingency Fund, claims notification; correction
45339 Salmon tenders, time charter; request for comments on Maritime Administration approval or disapproval of application from Penninsula Salmon, Inc.

National Transportation Safety Board
NOTICES
45419 Accident reports, safety recommendations and responses, etc.; availability

Nuclear Regulatory Commission
RULES
45256 National security information program; implementation; access authorization fees
45256 National security information program; implementation; extension of effective date
Practice rules:
45253 Adjudications involving conduct of military or foreign affairs functions, exceptions
PROPOSED RULES
Radiation protection standards:
45302 Clarification
NOTICES
Applications, etc.:
45425 Carolina Power & Light Co.
45425 Columbus-Cuneo-Cabrini Medical Center
45426, 45432 Commonwealth Edison Co. et al. (2 documents)
45427 Florida Power Corp. et al.
45427 Metropolitan Edison Co. et al.
45427 Nebraska Public Power District
45428 New York State Power Authority
45428 Nuclear Fuel Services, Inc.
45428 Portland General Electric Co. et al.
45429 Southern California Edison Co. et al.
45429 Tennessee Valley Authority
45429 University of Chicago
45431 Virginia Electric & Power Co.
45432 Wisconsin Electric Power Co.
45424 International Atomic Energy Agency codes of practice and safety guides; availability of drafts
Meetings:
45432 Electrical equipment; implementation of requirements for environmental qualification
45451 Meetings; Sunshine Act
45424 Regulatory guides; issuance and availability
Topical reports; issuance and availability:
45425 Estimating water equivalent snow depth from related meteorological variables; and probability estimates of temperature extremes for the contiguous United States

Public Health Service
NOTICES
Health maintenance organzations:
45377 Qualification requirements; correction

Radiation Policy Council
NOTICES
45436 Federal Occupational Radiation Exposure Regulations Task Force; establishment; extension of time per comments
45436 Radon in inhabited structures; task force work plan; inquiry; correction

Science and Technology Policy Office
NOTICES
Meetings:
45435, 45436 Intergovernmental Science, Engineering, and Technology Advisory Panel (4 documents)

Securities and Exchange Commission
PROPOSED RULES
Improving Govenment regulations:
45554 Regulatory agenda
NOTICES
Hearings, etc.:
45436 BNP U.S. Finance Corp.
45438 Consolidated Rail Corp.
Self-regulatory organizations; proposed rule changes:
45441 Bradford Securities Processing Services, Inc.
45441 National Association of Securities Dealers, Inc.
45443 Options Clearing Corp.

Southeastern Power Administration
NOTICES
45349 Kerr-Philpott system of projects; proposed marketing policy; inquiry

State Department
NOTICES
Environmental statements; availability, etc.:
45443 Antarctic mineral resources, international arrangement; intent to prepare

Surface Mining Office
PROPOSED RULES
Permanent program submission; various States:
45313 Colorado; hearing; correction
45313 Mississippi; public disclosure of Federal agencies comments

Textile Agreements Implementation Committee
NOTICES
Cotton, man-made, and wool textiles:
45341 Colombia
Man-made textiles:
45340 Taiwan

Trade Representative, Office of United States
NOTICES
45448 International Sugar agreement; letter to the Commissioner of Customs concerning implementation

Transportation Department
See also Coast Guard; Federal Aviation Administration; Federal Highway Administration; Federal Railroad Administration; National Highway Traffic Safety Administration; Urban Mass Transportation Administration.
RULES
45281 Minority business enterprise participation in DOT programs; implementation guidance
45269 Shipping restrictions and shipments of American flag ships and aircraft; transfer and redesignation of regulations; cross reference

Treasury Department
See Fiscal Service; Internal Revenue Service.

United States Railway Association
NOTICES
45451 Meetings; Sunshine Act

Urban Mass Transportation Administration
NOTICES
45447 Light rail vehicles, specifications; inquiry
Meetings:
45445 Energy impact assessment panel discussion; republication

MEETINGS ANNOUNCED IN THIS ISSUE

AGRICULTURE DEPARTMENT
Forest Service—
45338 Medicine Bow National Forest Grazing Advisory Board, 7-21-80

COMMERCE DEPARTMENT
International Trade Administration—
45338 Exporters' Textile Advisory Committee, 7-29-80
National Oceanic and Atmospheric Administration—
45339 Mid-Atlantic Fishery Management Council's Atlantic Mackerel, Resources Subpanel, Squid Fishery Resources Subpanel and Butterfish Subpanel, 7-17-80

DEFENSE DEPARTMENT
Air Force Department—
45342 Air University Board of Visitors, Air Force Institute of Technology Subcommittee, 8-5-80

EDUCATION DEPARTMENT
45344 Extension and Continuing Education National Advisory Council, Executive Committee, 8-8-80
45344 Extension and Continuing Education National Advisory Council, Media in Continuing Education Ad Hoc Committee, 8-6 and 8-7-80

ENERGY DEPARTMENT
45349 Interagency Geothermal Coordinating Council, Environmental Controls Panel, 7-8-80
Energy Research Office—
45349 Energy Research Advisory Board, Conservation R. & D. Subpanel, 7-10 and 7-11-80

ENVIRONMENTAL PROTECTION AGENCY
45362 Federal Insecticide, Fungicide, and Rodenticide Act (FIFRA) Scientific Advisory Panel, 7-24 and 7-25-80

HEALTH AND HUMAN SERVICES
Health Resources Administration—
45374 Graduate Medical Education National Advisory Committee, 7-27 through 7-29-80
45374 Health Professions Education National Advisory Council, 8-11 through 8-13-80

INTERIOR DEPARTMENT
Land Management Bureau—
45378 Butte District Grazing Advisory Board, 8-5 and 8-6-80
45380 Outer Continental Shelf Advisory Board, Alaska Regional Technical Working Group Committee, 7-23 and 7-24-80
45378 Roswell District Grazing Advisory Board, 8-7-80

JOINT BOARD FOR THE ENROLLMENT OF ACTUARIES ADVISORY COMMITTEE
45419 Actuarial Examinations Advisory Committee, 7-29-80

NUCLEAR REGULATORY COMMISSION
45432 Nuclear power plants, environmental qualification of electrical equipment, 7-14 through 7-19-80

SCIENCE AND TECHNOLOGY POLICY OFFICE
45435 Intergovernmental Science, Engineering, and Technology Advisory Panel (ISETAP) Full Panel, 7-25-80
45436 Intergovernmental Science, Engineering, and Technology Advisory Panel (ISETAP) Natural Resources and Environment Task Force, 7-24-80
45436 Intergovernmental Science, Engineering, and Technology Advisory Panel (ISETAP) Science and Technology Transfer Task Force, 7-24-80
45435 Intergovernmental Science, Engineering, and Technology Advisory Panel (ISETAP) Transportation, Commerce, and Community Development Task Force, 7-24-80

TRANSPORTATION DEPARTMENT
Federal Aviation Administration—
45445 Radio Technical Commission for Aeronautics (RTCA) Separation Study Review Group, 7-24 and 7-25-80
45445 Radio Technical Commission for Aeronautics (RTCA) Special Committee 145-Digital Avionics Software, 7-22 and 7-23-80
Federal Highway Administration—
45445 Energy impact panel discussion, 7-7 and 7-8-80
Federal Railroad Administration—
45447 Minority Business Resource Center Advisory Committee, 7-21-80

HEARING

ENVIRONMENTAL PROTECTION AGENCY
45356, 45357, 45359 California State Motor Vehicle Pollution Control Standard, 7-24 and possibly 7-25-80

CORRECTED HEARINGS

COMMERCE DEPARTMENT
National Oceanic and Atmospheric Administration—
45336 Atlantic Groundfish Management, 7-16-80

INTERIOR DEPARTMENT
Office of Surface Mining—
45313 Permanent Program Submission from the State of Colorado, 7-18 corrected to 7-25-80

RESCHEDULED HEARING

ENERGY DEPARTMENT
Economic Regulatory Administration—
45303 Calculation for the cost of using alternate fuels under the Powerplant and Industrial Fuel Use Act of 1978, rescheduled from 7-10 to 7-31 and 8-1-80

CFR PARTS AFFECTED IN THIS ISSUE

A cumulative list of the parts affected this month can be found in the Reader Aids section at the end of this issue.

3 CFR
Proclamations:
4771 45247
4772 45249

7 CFR
905 45251
908 45252
910 45301
916 45252
Proposed Rules:
1097 45302
1102 45302
1108 45302

10 CFR
2 45253
25 (2 documents) 45256
95 45256
Proposed Rules:
20 45302
503 45303
504 45303
506 45303

11 CFR
9033 45257

12 CFR
225 45257
Proposed Rules:
204 45303
1204 45303

14 CFR
39 (6 documents) 45257–45264
71 (7 documents) 45265–45268
75 45268
Proposed Rules:
Ch. I 45305
71 (7 documents) 45305–45310

17 CFR
Proposed Rules:
Ch. II 45554

26 CFR
Proposed Rules:
1 45311

28 CFR
Proposed Rules:
Ch. I 45311

30 CFR
Proposed Rules:
Ch. VII 45313
732 45313

32A CFR
Ch. VII 45269

33 CFR
165 45269
175 45269

37 CFR
201 45270

40 CFR
52 45275
65 45277
Proposed Rules:
52 (2 documents) 45314, 45318
413 45322

44 CFR
Ch. IV 45269

46 CFR
160 45278
502 45280
Proposed Rules:
151 45327

49 CFR
23 45281
571 45287
1002 (2 documents) 45526, 45534
1003 45534
1004 45528
1011 45525
1033 (3 documents) 45288, 45289
1045A 45534
1047 45524
1056 45534
1062 45534
1100 (2 documents) 45529 45534
1101 45525
1130 45534
1131 45525
1136 45526
1150 45534
Proposed Rules:
Ch. X (2 documents) 45545
571 (2 documents) 45334, 45336

50 CFR
32 45289
611 (2 documents) 45291, 45296
655 45296
656 45291
Proposed Rules:
651 45336

Federal Register
Vol. 45, No. 130
Thursday, July 3, 1980

Presidential Documents

Title 3—

The President

Proclamation 4771 of July 2, 1980

Registration Under the Military Selective Service Act

By the President of the United States of America

A Proclamation

Section 3 of the Military Selective Service Act, as amended (50 U.S.C. App. 453), provides that male citizens of the United States and other male persons residing in the United States who are between the ages of 18 and 26, except those exempted by Sections 3 and 6(a) of the Military Selective Service Act, must present themselves for registration at such time or times and place or places, and in such manner as determined by the President. Section 6(k) provides that such exceptions shall not continue after the cause for the exemption ceases to exist.

The Congress of the United States has made available the funds (H.J. Res. 521, approved by me on June 27, 1980), which are needed to initiate this registration, beginning with those born on or after January 1, 1960.

NOW, THEREFORE, I, JIMMY CARTER, President of the United States of America, by the authority vested in me by the Military Selective Service Act, as amended (50 U.S.C. App. 451 *et seq.*), do hereby proclaim as follows:

1-1. *Persons to be Registered and Days of Registration.*

1-101. Male citizens of the United States and other males residing in the United States, unless exempted by the Military Selective Service Act, as amended, who were born on or after January 1, 1960, and who have attained their eighteenth birthday, shall present themselves for registration in the manner and at the time and places as hereinafter provided.

1-102. Persons born in calendar year 1960 shall present themselves for registration on any of the six days beginning Monday, July 21, 1980.

1-103. Persons born in calendar year 1961 shall present themselves for registration on any of the six days beginning Monday, July 28, 1980.

1-104. Persons born in calendar year 1962 shall present themselves for registration on any of the six days beginning Monday, January 5, 1981.

1-105. Persons born on or after January 1, 1963, shall present themselves for registration on the day they attain the 18th anniversary of their birth or on any day within the period of 60 days beginning 30 days before such date; however, in no event shall such persons present themselves for registration prior to January 5, 1981.

1-106. Aliens who would be required to present themselves for registration pursuant to Sections 1-101 to 1-105, but who are in processing centers on the dates fixed for registration, shall present themselves for registration within 30 days after their release from such centers.

1-107. Aliens and noncitizen nationals of the United States who reside in the United States, but who are absent from the United States on the days fixed for their registration, shall present themselves for registration within 30 days after their return to the United States.

1-108. Aliens and noncitizen nationals of the United States who, on or after July 1, 1980, come into and reside in the United States shall present themselves for registration in accordance with Sections 1-101 to 1-105 or within 30 days after coming into the United States, whichever is later.

1–109. Persons who would have been required to present themselves for registration pursuant to Sections 1–101 to 1–108 but for an exemption pursuant to Section 3 or 6(a) of the Military Selective Service Act, as amended, or but for some condition beyond their control such as hospitalization or incarceration, shall present themselves for registration within 30 days after the cause for their exempt status ceases to exist or within 30 days after the termination of the condition which was beyond their control.

1–2. *Places and Times for Registration.*

1–201. Persons who are required to be registered and who are in the United States on any day fixed herein for their registration, shall present themselves for registration before a duly designated employee in any classified United States Post Office.

1–202. Citizens of the United States who are required to be registered and who are not in the United States on any of the days set aside for their registration, shall present themselves at a United States Embassy or Consulate for registration before a diplomatic or consular officer of the United States or before a registrar duly appointed by a diplomatic or consular officer of the United States.

1–203. The hours for registration in United States Post Offices shall be the business hours during the days of operation of the particular United States Post Office. The hours for registration in United States Embassies and Consulates shall be those prescribed by the United States Embassies and Consulates.

1–3. *Manner of Registration.*

1–301. Persons who are required to be registered shall comply with the registration procedures and other rules and regulations prescribed by the Director of Selective Service.

1–302. When reporting for registration each person shall present for inspection reasonable evidence of his identity. After registration, each person shall keep the Selective Service System informed of his current address.

Having proclaimed these requirements for registration, I urge everyone, including employers in the private and public sectors, to cooperate with and assist those persons who are required to be registered in order to ensure a timely and complete registration. Also, I direct the heads of Executive agencies, when requested by the Director of Selective Service and to the extent permitted by law, to cooperate and assist in carrying out the purposes of this Proclamation.

IN WITNESS WHEREOF, I have hereunto set my hand this second day of July, in the year of our Lord nineteen hundred and eighty, and of the Independence of the United States of America the two hundred and fourth.

Jimmy Carter

[FR Doc. 80–20268
Filed 7–2–80; 11:44 am]
Billing code 3195–01–M

[1]Editorial Note: The President's remarks of July 2, 1980, on signing Proclamation 4771, are printed in the Weekly Compilation of Presidential Documents (Vol. 16, no. 27).

Presidential Documents

Proclamation 4772 of July 2, 1980

National Porcelain Art Month

By the President of the United States of America

A Proclamation

The art of painting on porcelain has been recognized as a fine art by all the world's great civilizations and has enriched museums in many countries for hundreds of years.

This art form, requiring great skill, training, and talent, has been enthusiastically adopted and enhanced by thousands of talented Americans whose labors will awe and delight generations yet to come.

The Congress, by Senate Joint Resolution 115, has requested the President to proclaim the month of July 1980 as National Porcelain Art Month.

NOW, THEREFORE, I, JIMMY CARTER, President of the United States of America, do hereby proclaim the month of July 1980 as National Porcelain Art Month, and I call upon the people of the United States to observe the month with appropriate ceremonies and activities.

IN WITNESS WHEREOF, I have hereunto set my hand this second day of July in the year of our Lord nineteen hundred and eighty, and of the Independence of the United States of America the two hundred and fourth.

Jimmy Carter

[FR Doc. 80-20269
Filed 7-2-80; 11:45 am]
Billing code 3195-01-M

Rules and Regulations

Federal Register
Vol. 45, No. 130
Thursday, July 3, 1980

This section of the FEDERAL REGISTER contains regulatory documents having general applicability and legal effect, most of which are keyed to and codified in the Code of Federal Regulations, which is published under 50 titles pursuant to 44 U.S.C. 1510.
The Code of Federal Regulations is sold by the Superintendent of Documents. Prices of new books are listed in the first FEDERAL REGISTER issue of each month.

DEPARTMENT OF AGRICULTURE

Agricultural Marketing Service

7 CFR Part 905

[Orange, Grapefruit, Tangerine, and Tangelo Reg. 3, Amdt. 12]

Oranges, Grapefruit, Tangerines, and Tangelos Grown in Florida; Amendment of Grade Requirements

AGENCY: Agricultural Marketing Service, USDA.

ACTION: Final rule.

SUMMARY: This amendment lowers the minimum grade requirements on domestic and export shipments of Florida Valencia and other late type oranges from U.S. No. 1 to U.S. No. 2 Russet. Specification of such minimum grade requirements for Florida Valencia and other late type oranges is necessary because of current and prospective supply and demand for such fruit, and to maintain orderly marketing conditions in the interest of producers and consumers.

EFFECTIVE DATE: June 30, 1980.

FOR FURTHER INFORMATION CONTACT: Malvin E. McGaha, Chief, Fruit Branch, F&V, AMS, USDA, Washington, D.C. 20250, telephone 202-447-5975. The Final Impact Analysis relative to this final rule is available on request from the above named individual.

SUPPLEMENTARY INFORMATION: *Findings.* This final action has been reviewed under USDA procedures established in Secretary's Memorandum 1955 to implement Executive Order 12044, and has been classified "not significant". This regulation is issued under the marketing agreement and Order No. 905 (7 CFR Part 905), regulating the handling of oranges, grapefruit, tangerines, tangelos grown in Florida. The agreement and order are effective under the Agricultural Marketing Agreement Act of 1937, as amended (7 U.S.C. 601-674). The regulation is based upon the recommendations of the committee established under the marketing agreement and order, and upon other information. It is found that the regulation of shipments of Valencia and other late type oranges, as hereinafter provided, will tend to effectuate the declared policy of the act.

The amendment reflects the Department's appraisal of the current and prospective supply and market demand conditions for Florida Valencia oranges. Less restrictive grade requirements for such fruit are consistent with the character of much of the oranges available for fresh shipment.

This action was recommended at a public meeting at which all present could state their views. There is insufficient time between the date when information became available upon which this regulation is based and when the action must be taken to warrant a 60-day comment period as recommended in E.O. 12044, and it is impracticable and contrary to the public interest to give preliminary notice, engage in public rulemaking, and postpone the effective date until 30 days after publication in the Federal Register (5 U.S.C. 553). It is necessary to effectuate the declared purposes of the act to make these regulatory provisions effective as specified, and handlers have been apprised of such provisions and the effective time. This amendment relieves restrictions on the handling of Valencia and other late type oranges.

Accordingly, it is found that the provisions of § 905.303 (44 FR 59195; 65962; 66779; 69917; 72025; 74794; 45 FR 6591; 7999; 12773; 24446; 27739; and 35305) should be and hereby are amended by revising in Table I (applicable to domestic shipments of the specified fruit) and in Table II (applicable to export shipments of the specified fruit) the minimum grade applicable to Valencia and other late type oranges as follows:

§ 905.303 Orange, Grapefruit, Tangerine, and Tangelo Regulation 3.

(a) * * *

Table I

Variety	Regulation period	Minimum grade	Minimum diameter (inches)
	(2)	(3)	(4)
Oranges: Valencia and other late type.	June 30 thru Oct. 12, 1980	U.S. No. 2 Russet	2 9/16

* * * * * * *

Table II

Variety	Regulation period	Minimum grade	Minimum diameter (inches)
	(2)	(3)	(4)
Oranges: Valencia and other late type.	June 30 thru Oct. 12, 1980	U.S. No. 2 Russet	2 9/16

* * * * * * *

(Secs. 1-19, 48 Stat. 31, as amended; (7 U.S.C. 601-674))

Dated, June 27, 1980, to become effective June 30, 1980.

Charles R. Brader,

Director, Fruit and Vegetable Division, Agricultural Marketing Service.

[FR Doc. 80-19951 Filed 7-2-80; 8:45 am]
BILLING CODE 3410-02-M

7 CFR Part 908

[Valencia Orange Reg. 652, Amdt. 1; Valencia Orange Reg. 653]

Valencia Oranges Grown in Arizona and Designated Part of California; Limitation of Handling

AGENCY: Agricultural Marketing Service, USDA.

ACTION: Final rule.

SUMMARY: This action establishes the quantity of fresh California-Arizona Valencia oranges that may be shipped to market during the period July 4–July 10, 1980, and increases the quantity of such oranges that may be so shipped during the period June 27–July 3, 1980. Such action is needed to provide for orderly marketing of fresh Valencia oranges for the periods specified due to the marketing situation confronting the orange industry.

DATES: The regulation becomes effective July 4, 1980, and the amendment is effective for the period June 27–July 3, 1980.

FOR FURTHER INFORMATION CONTACT: Malvin E. McGaha, 202–447–5975.

SUPPLEMENTARY INFORMATION: *Findings.* This regulation and amendment are issued under the marketing agreement, as amended, and Order No. 908, as amended (7 CFR part 908), regulating the handling of Valencia oranges grown in Arizona and designated part of California. The agreement and order are effective under the Agricultural Marketing Agreement Act of 1937, as amended (7 U.S.C. 601–674). The action is based upon the recommendations and information submitted by the Valencia Orange Administrative Committee and upon other available information. It is hereby found that the action will tend to effectuate the declared policy of the act.

This action is consistent with the marketing policy for 1979–80 which was designated significant under the procedures of Executive Order 12044. The marketing policy was recommended by the committee following discussion at a public meeting on January 22, 1980. A final impact analysis on the marketing policy is available from Malvin E. McGaha, Chief, Fruit Branch, F&V, AMS, USDA, Washington, D.C. 20250, telephone 202–447–5975.

The committee met again publicly on July 1, 1980 at Los Angeles, California, to consider the current and prospective conditions of supply and demand and recommended a quantity of Valencia oranges deemed advisable to be handled during the specified weeks. The committee reports the demand for Valencia oranges is steady.

It is further found that there is insufficient time between the date when information became available upon which this regulation and amendment are based and when the actions must be taken to warrant a 60-day comment period as recommended in E.O. 12044, and that it is impracticable and contrary to the public interest to give preliminary notice, engage in public rulemaking, and postpone the effective date until 30 days after publication in the Federal Register (5 U.S.C. 553), and the amendment relieves restrictions on the handling of Valencia oranges. It is necessary to effectuate the declared purposes of the act to make these regulatory provisions effective as specified, and handlers have been apprised of such provisions and the effective times.

1. Section 908.953 is added as follows:

§ 908.953. Valencia Orange Regulation 653.

Order. (a) The quantities of Valencia oranges grown in Arizona and California which may be handled during the period July 4, 1980, through July 10, 1980, are established as follows:

(1) District 1: 306,000 cartons;
(2) District 2: 344,000 cartons;
(3) District 3: Open Movement.

(b) As used in this section, "handled," "District 1," "District 2," "District 3," and "carton" mean the same as defined in the marketing order.

§ 908.952 [Amended]

2. Paragraph (a) in § 908.952 Valencia Orange Regulation 652 (45 FR 43151), is hereby amended to read:

§ 908.952 Valencia Orange Regulation 652.

(a) * * *
(1) District 1: 453,000 cartons;
(2) District 2: 397,000 cartons;
(3) District 3: Open Movement.

(Secs. 1–19, 48 Stat. 31, as amended; 7 U.S.C. 601–674)

Dated: July 2, 1980.

D. S. Kuryloski,
Deputy Director, Fruit and Vegetable Division, Agricultural Marketing Service.

[FR Doc. 80-20266 Filed 7-2-80; 11:46 am]
BILLING CODE 3410-02-M

---

7 CFR Part 916

[Nectarine Regulation 12, Amendment 1]

Nectarines Grown in California; Grade and Size Requirements

AGENCY: Agricultural Marketing Service, USDA.

ACTION: Final rule.

SUMMARY: This amendment extends minimum grade and size requirements currently in effect for fresh California nectarine shipments for the balance of the 1980 season. Such action is designed to promote orderly marketing of suitable quality and sizes of fresh California nectarines in the interest of producers and consumers.

EFFECTIVE DATES: July 7, 1980, through May 31, 1981.

FOR FURTHER INFORMATION CONTACT: Malvin E. McGaha, Chief, Fruit Branch, Fruit and Vegetable Division, AMS, USDA, Washington, D.C. 20250, telephone: 202–447–5975. The Final Impact Statement relative to this final rule is available on request from the above named individual.

SUPPLEMENTARY INFORMATION: This final action has been reviewed under USDA procedures established in Secretary's Memorandum 1955 to implement Executive Order 12044, and has been classified as "not significant." Section 916.354 Nectarine Regulation 12, which established grade and size requirements for fresh shipments of nectarines for the period May 16–July 6, 1980, was published in the May 16, 1980, issue of the Federal Register (45 FR 32308).

Notice of proposed extension of these requirements was published in the Federal Register (45 FR 38386; 41962), on June 9, 1980, and it provided interested persons 15 days for filing written comments. None were received.

This amendment is issued under the marketing agreement, as amended, and Order No. 916, as amended (7 CFR Part 916), regulating the handling of nectarines grown in California. The agreement and order are effective under the Agricultural Marketing Agreement Act of 1937, as amended (7 U.S.C. 601–674). This action is based upon the recommendations and information submitted by the Nectarine Administrative Committee established under the marketing agreement and order which requested that the regulatory provisions be effective through May 31, 1981, and upon other available information.

Under the amendment, California fresh nectarine shipments are required to grade at least U.S. No. 1, except that provision is made for a higher maturity standard based on color standards by variety or other specified tests. The grade requirements allow slightly less scarring, but an additional 25 percent tolerance is permitted for fruit not well formed but not badly misshapen. In addition, minimum size requirements are specified for 56 varieties of nectarines in terms of the number of

fruit in a No. 22D standard lug box, or in a 16-pound sample.

These grade and size requirements reflect the Department's appraisal of the need for regulating nectarines during the 1980 season, based on the available supply and market demand conditions. Production of 1980 season California nectarines is estimated at 185,000 tons compared with production of 172,000 tons in 1979, and 148,000 tons in 1978. Shipment of this season's nectarine crop, which is sizing well and of good quality, is currently underway.

After consideration of all matter presented, including the proposals in the notice and other available information, it is hereby found that this amendment is in accordance with the marketing agreement and order and it will tend to effectuate the declared policy of the act.

It is further found that good cause exists for not postponing the effective date of this amendment until 30 days after publication in the Federal Register (5 U.S.C. 553) in that: (1) Nectarines are currently being shipped and the regulatory provisions should apply to all shipments in order to effectuate the declared policy of the act; (2) The regulatory provisions are the same as those currently in effect as well as those in the notice to which no comments were filed; and (3) Handlers have been apprised of such provisions and the effective time.

Therefore, § 916.354 Nectarine Regulation 12 (45 FR 32308) is amended to read as follows: (§ 916.354 expires May 31, 1981, and will not be published in the annual Code of Federal Regulations).

§ 916.354 Nectarine Regulation 12.

(a) During the period July 7, 1980, through May 31, 1981, no handler shall handle:

(1) Any package or container of any variety of nectarines unless such nectarines meet the requirements of U.S. No. 1 grade: *Provided,* That maturity shall be determined by the application of color standards by variety or such other tests as determined to be proper by the Federal or Federal-State Inspection Service: *Provided further,* That nectarines 2 inches in diameter or smaller, shall not have fairly light colored, fairly smooth scars which exceed the aggregate area of a circle ⅜ inch in diameter, and nectarines larger than 2 inches in diameter shall not have fairly light colored, fairly smooth scars which exceed an aggregate area of a circle ½ inch in diameter: *Provided further,* That an additional tolerance of 25 percent shall be permitted for fruit that is not well formed but not badly misshapen.

(2) Any package or container of Mayred variety nectarines unless:

(i) Such nectarines, when packed in molded forms (tray pack) in a No. 22D standard lug box, are of a size that will pack, in accordance with the requirements of a standard pack, not more than 112 nectarines in the lug box;

(ii) Such nectarines in any container when packed other than as specified in subdivision (i) of this subparagraph (2) are of a size that a 16-pound sample, representative of the nectarines in the package or container, contains not more than 105 nectarines.

(3) Any package or container of Mayfair, Maybelle, or Aurello Grand variety nectarines unless:

(i) Such nectarines, when packed in molded forms (tray pack) in a No. 22D standard lug box, are of a size that will pack, in accordance with the requirements of a standard pack, not more than 108 nectarines in the lug box;

(ii) Such nectarines in any container when packed other than as specified in subdivision (i) of this subparagraph (3) are of a size that a 16-pound sample, representative of the nectarines in the package or container, contains not more than 98 nectarines.

(4) Any package or container of Apache, Armking, Crimson Gold, Early Red, Early Star, Early Sungrand, Firebrite, Independence, June Belle, June Grand, Kent Grand, May Grand, Moon Grand, Red Diamond, Red June, Spring Grand, Spring Red, Star Grand I, Star Grand II, Summer Grand, Sun Grand, 73–40, or Zee Gold variety nectarines unless:

(i) Such nectarines, when packed in molded forms (tray pack) in a No. 22D standard lug box, are of a size that will pack, in accordance with the requirements of a standard pack, not more than 96 nectarines in the lug box; or

(ii) Such nectarines in any container when packed other than as specified in subdivision (i) of this subparagraph (4) are of a size that a 16-pound sample, representative of the nectarines in the package or container, contains not more than 90 nectarines.

(5) Any package or container of Autumn Grand, Bob Grand, Clinton-Strawberry, Ed's Red, Fairlane Fantasia, Flamekist, Flavortop, Gold King, Granderli, Grand Prize, Hi-Red, Late Le Grand, Le Grand, Niagara-Grand, Red Free, Red Grand, Regal Grand, Richards Grand, Royal Giant, Royal Grand, Ruby Grand, September Grand, Tasty Free, Tom Grand, 61–61, Honey Gold, Larry's Grand, Son Red variety nectarines unless:

(i) Such nectarines, when packed in molded forms (tray pack) in a No. 22D standard lug box, are of a size that will pack, in accordance with the requirements of a standard pack, not more than 88 nectarines in the lug box; or

(ii) Such nectarines in any container when packed other than specified in subdivision (i) of this subparagraph (5) are of a size that a 16-pound sample representative of the nectarines in the package or container, contains not more than 78 nectarines.

(b) As used herein, "U.S. No 1" and "standard pack" means the same as defined in the United States Standards for Grades of Nectarines (7 CFR 2851.3145–3160); "No. 22D standard lug box" means the same as defined in § 1387.11 of the "Regulations of the California Department of Food and Agriculture." All other terms mean the same as defined in this marketing order.

(Secs. 1–19, 48 Stat. 31, as amended; 7 U.S.C. 601–674)

Dated: June 30, 1980.

D. S. Kuryloski,

Deputy Director, Fruit and Vegetable Division, Agricultural Marketing Service.

[FR Doc. 80-20089 Filed 7-2-80; 8:45 am]
BILLING CODE 3410-02-M

NUCLEAR REGULATORY COMMISSION

10 CFR Part 2

Amendment To Provide Exception From Procedural Rules for Adjudications Involving Conduct of Military or Foreign Affairs Functions

AGENCY: U.S. Nuclear Regulatory Commission.

ACTION: Immediately effective final rule.

SUMMARY: The Commission is amending its "Rules of General Applicability" for the conduct of adjudicatory proceedings in 10 CFR Part 2 to provide an exception from those rules for adjudications involving the conduct of military or foreign affairs functions. The amendment permits the Commission to exercise greater flexibility within due process limits in fashioning procedures for proceedings involving military or foreign affairs functions. The amendment involves the conduct of military or foreign affairs functions and is thereby exempt from the notice of proposed rulemaking and deferred effectiveness provisions of § 553 of the Administrative Procedure Act (APA). It is also exempt from these provisions as an interpretative rule and a rule of agency procedure.

DATE: The amendments are effective on July 3, 1980.

FOR FURTHER INFORMATION CONTACT: Marjorie S. Nordlinger, Office of the General Counsel, U.S. Nuclear Regulatory Commission, Washington, D.C. 20555; phone 202-634-1465.

SUPPLEMENTARY INFORMATION: The Commission is amending its rules governing procedures for adjudications in subpart G of 10 CFR Part 2 to provide an exception from those procedures for proceedings to the extent that there is involved the conduct of military or foreign affairs functions.

This rule change has developed from the Commission's consideration of Natural Resources Defense Council's February 6, 1980 request for a hearing in the matter of a proposed amendment to the special nuclear materials license of Nuclear Fuel Services at Erwin, Tennessee. The Commission has been reflecting on whether the public interest would be better served by a legislative type hearing in light of the fact that sensitive issues and basic regulatory policy questions involving the conduct of military functions may be bound up in the adjudication of this matter.

Because there have previously been no NRC hearings involving the conduct of military functions, the Commission has not specifically addressed such hearings in its rules. However, the Administrative Procedure Act (APA) provides for just such an exception as the Commission proposes. 5 U.S.C. 554 entitled "Adjudications" provides in relevant part:

> (a) This section applies, according to the provisions thereof, in every case of adjudication required by statute to be determined on the record after opportunity for an agency hearing, except to the extent that there is involved—. . . . (4) the conduct of military or foreign affairs functions.

In the Commission's view the § 554(a)(4) exception is currently applicable to NRC adjudications pursuant to Section 181 of the Atomic Energy Act of 1954 as amended, which makes the APA applicable to all agency action, but for purposes of clarification the Commission has decided to incorporate the exception in its rules. That will have the effect of clarifying that adjudications involving military functions may be exempted under the Commission's rules from the formal adjudicatory procedural requirements which are applicable by rule to other adjudications conducted by the NRC. Should the Commission decide on a legislative type hearing in the NFS Erwin proceeding, there will then be no question about the appropriateness of such hearings under its rules.

The Commission has decided to incorporate an exemption for the "conduct of foreign affairs functions" in order to conform its rule more exactly to the APA exemption, and to clarify that it has available the same measure of flexibility in fashioning procedures where military or foreign affairs functions are involved.

The military and foreign affairs exception will serve the same purposes in our rules as it does in the APA. It will ensure that delays often associated with the adjudicatory process will not encumber the military or foreign affairs functions of the United States. It will also serve better to protect the highly sensitive information associated with both military and foreign affairs functions. Finally, it will enable the Commission to reserve to itself consideration of military and foreign policy issues which only it can resolve and to approach such matters in an informal procedural framework best suited to consideration of these issues. The alternative of the Commission itself presiding over the conduct of a formal evidentiary proceeding is impracticable because of the demands on the Commissioners' time this would entail, and is inappropriate because formal adjudicatory proceedings are not the most suitable means for resolution of policy issues.

This rule is promulgated effective immediately. The requirements of Section 553 of the APA do not apply by the terms of that section (*see* § 553(a)(1)) where, as here, a military or foreign affairs function of the United States is involved). Additionally, general notice of proposed rulemaking is not required because the amendments by their nature concern rules of agency procedure or practice, and because the amendments merely interpret the present rules of practice in 10 CFR part 2 in light of Section 181 of the Atomic Energy Act.

Pursuant to the Atomic Energy Act of 1954, as amended, the Energy Reorganization Act of 1974, as amended, and Sections 552, 553, and 554 of Title 5 of the United States Code, notice is hereby given that the following amendment to Title 10, Chapter 1, Code of Federal Regulations, part 2 is published as a document subject to codification.

10 CFR part 2 subpart G is therefore amended effective immediately by adding after § 2.700 a new § 2.700a reading as follows:

§ 2.700a Exceptions.

Consistent with due process requirements the Commission may provide alternative procedures in adjudications to the extent that there is involved the conduct of military or foreign affairs functions.

(Sec. 161p, Pub. L. 83-703, 68 Stat. 948 (42 U.S.C. 2201p); 5 U.S.C. 554, Pub. L. 89-554, Sept. 6, 1966, 80 Stat. 384)

Note.—Commissioners Gilinsky and Bradford dissent from this order. Their separate views are attached.

FOR FURTHER INFORMATION CONTACT: Marjorie S. Nordlinger, Office of the General Counsel, U.S. Nuclear Regulatory Commission, Washington, D.C. 20555; phone 202-634-1465.

Dated at Washington, D.C. this 26th day of June, 1980.

Nuclear Regulatory Commission.

Samuel J. Chilk,

Secretary of the Commission.

Commissioner Gilinsky's Dissent—SECY-A-80-41A and SECY-A-80-82A

I do not believe that the provisions of the Administrative Procedures Act permit the Commission to amend its adjudicatory regulations in a manner which affects the substantive rights of the parties without providing notice and an opportunity for comment.

It is worth recalling what this case is about. The NFS Erwin facility was unable to meet the NRC requirements regarding material accounting of potential bomb material. There is little question that if this had been a commercial facility, its license would have been revoked. This was the course of action which the NRC staff recommended. Because the operations of this facility are dictated ultimately by the needs of the Navy, irrespective of whether or not the facility meets NRC requirements, the NRC staff suggested that responsiblity for its oversight be transferred to the Assistant Secretary for Defense Programs, Department of Energy. I agreed; the Commission decided on another course. It relaxed the applicable material accounting requirements to a level the facility is apparently able to meet, and thus continued nominal oversight of this facility.

The lengths to which the Commission is now prepared to go to prevent public examination of this decision confirms my belief that my original view was correct. Since authority over the operation of the facility rests, as a practical matter, with the Department of Energy, responsibility for keeping track of the material should also rest with that Department.

Dissent of Commissioner Bradford

Today's decisions in this matter are dishonorable and disgraceful. They leave one wondering just where the Commission would stop in its efforts to avoid public scrutiny. In order to rush them out while a majority could still be had for such clumsy squirming, the Commission has had to trample its own rules of procedure.[1] A major side effect of the

[1] The agency's rules provide for an automatic five-day extension of time upon the request of any Commissioner before a vote on any item. They also provide that a majority of the Commission may change the rules at will. The decision to disregard agency legal advice was agreed to by three Commissioners on June 23. An extension having been requested on June 24, the Commission for the first time in its history voted to instruct the

Footnotes continued on next page

Commission's decision is to confirm the concern expressed by Commissioner Gilinsky when the Nuclear Regulatory Commission decided to retain jurisdiction over the Erwin facility in December 1979. It is now clear that that decision did not mean, as I then thought in joining the majority, that serious regulation would continue at Erwin. Instead, the Commission was seeking to extend whatever credibility it possessed to cover the facility's inability to keep adequate track of special nuclear material while avoiding any substantive or procedural regulatory action that might inconvenience or embarrass the facility operators or the Department of Energy.

There are three decisions involved here. The basic one is the Commission decision to renege on its earlier offer of a full adjudicatory hearing on the Erwin facility to the Natural Resources Defense Council. The hearing offered in January 1980 was clearly adjudicatory, with discovery and cross-examination, for the Commission rules at that time provided for no other format in a case like this.[2] It is this difficulty in the rules that has led the majority to its second decision, namely the promulgation of a rule stating that "consistent with due process requirements, the Commission may provide alternative procedures in adjudication to the extent that there is involved the conduct of military or foreign affairs functions." The third decision, made in the face of irreconcilable advice from every respectable legal office in the agency,[3] was to make this rule immediately effective through yet a second reliance on a military functions exception in the Administrative Procedure Act. It is dubious enough to have stated that the regulation of the Erwin facility involves a clear military function, for neither regulation nor the loss of special nuclear material are within the functions normally performed by the military and none of the people involved are employees of the military. However, the dubiousness of this action pales beside the absolutely preposterous claim that the promulgation of a Nuclear Regulatory Commission rule regarding military functions itself involves the conduct of military affairs.[4] Even the Department of Defense, which might attempt such a claim regarding its rules, chooses instead to offer notice and comment. Throughout the entire span of the Federal Government, I venture with some confidence to say that only the three would-be colonels who are voting for today's action have ever tried such a deception as to what might be a military function.

By making this rule change immediately effective, the Commission has violated the Administrative Procedure Act.[5] The Commission states three bases for its action: 1) the rule involves a military function; 2) the rule is interpretative; and 3) it is a rule of agency procedure. Each reason is far from the truth. As already noted, there is no military function in the promulgating of a change in the Commission's rules of practice or in eliminating public comment on the change. In addition, it is clear from the legislative history of the Administrative Procedure Act that this exception was only meant to apply "to the extent" a military function is "clearly and directly" or "directly involved."[6] It is also clear, as already noted, that this is not an interpretative rule, for it creates two new types of hearing categories that are not currently provided for in the NRC's regulations. Finally, it is clear that this is not a truly procedural rule, for it is no mechanistic prescription of the form of agency practice. This Commission has previously recognized that the rights of parties to adjudicatory hearings, including the rights to cross-examination are substantial.[7] Furthermore, new procedural rules cannot be applied to pending proceedings if a party will be injured or prejudiced thereby.[8]

Lastly, there is the question of whether an adjudicatory hearing is in order here. The NRDC petition makes a number of factual allegations regarding the sufficiency of NRC security and accounting procedures at Erwin, a facility shut down last year precisely because it had lost track of significant quantities of special nuclear material. Judgments about the adequacy of the revised NRC procedures are not broad policy decisions. They cannot be made without detailed factual findings of precisely the sort best aided by discovery and cross-examination.[9]

Needless to say, classified information can be protected as necessary in any proceeding.[10] The presiding officer(s) can avoid any dilatory tactics or abuses of procedural rights. The facility would continue to operate during the proceeding, so that Navy's fuel supply is not in jeopardy. General statements to the contrary appearing at pp. 3-4 of the Supplementary Information section of the rule are deliberately phrased to mislead and are of absolutely no applicability to this proceeding. The only thing being protected against here is the potential embarrassment to this agency or to the Department of Energy that might flow from effective probing of particular facts in this case. That the NRC would go to such dishonorable lengths for so unworthy a purpose is, as I said at the outset, a disgrace.

[FR Doc. 80-20151 Filed 7-2-80; 8:45 am]

BILLING CODE 7590-01-M

Footnotes continued from last page

Secretary not to grant it. This was done despite the fact that decisions on other matters of major importance have been forthcoming throughout the week and that both June 25 and June 26 were entirely taken up with Commission meetings on other matters.

[2] Contrary to the Commission claim in the supplementary information section that the proposed rule clarifies existing authority, the General Counsel advised the Agency, "Current NRC rules require formal hearings in all cases of agency adjudication, and the offer of a hearing in this case was no doubt construed—quite reasonably—as an offer of a formal hearing." (General Counsel's memorandum of May 16, 1980, page 2.) In fact, there is no ambiguity here to clarify. NRC has in past not made use of the military or foreign affairs exceptions provided in the APA in the context of Section 189 even when this argument might have been made. The regulations and many years of practice make clear that a party requesting a hearing in a license amendment matter is entitled to an on-the-record adjudicatory hearing. If the Commission entertained doubt on this point, it would not be risking court reversal by promulgating this rule on an immediately effective basis.

The only past indication of a different sort appears in *In the Matter of Edlow International*, 3 NRC 563 (1976). There, the Commission conceded that a hearing of right would have to be "adjudicatory or trial-type," "subject to appropriate modifications made in accordance with the [APA's] 'foreign policy' exception (at p. 570)." The Commission then denied standing and granted a discretionary hearing very like the one offered here, pointing out that, if standing had been found, a more formal hearing would have been in order. Since the Commission did not put its dictum regarding the APA exceptions into practice, it never made clear why it would concede that an adjudicatory hearing was required despite the exceptions while still feeling that the military or foreign affairs exception was available to modify that hearing.

[3] SECY-A-80-41—"NRDC's Request for a Hearing in the Matter of NFS-Erwin" (March 27, 1980).

SECY-A-80-82—"SECY-A-80-41, NRDC's Request for a Hearing in the Matter of NFS-Erwin—Draft Federal Register Notice Proposing a Rule Change" (June 11, 1980).

Memorandum to the Commission from Leonard Bickwit, "SECY-A-80-41—Analysis of the Requirement for an Adjudicatory Hearing and Discussion of Alternatives" (May 16, 1980). Advice to the contrary in this paper was explicitly *rescinded in SECY-A-80-82*.

Memorandum to the Commission from Leonard Bickwit, Jr., General Counsel, "SECY-A-80-82—Rule Change to Take Advantage of the Military Function Exception—Immediate Effectiveness" (June 16, 1980).

Memorandum to Chairman Ahearne from Howard K. Shapar, Executive Legal Director, "Prior Notice Requirement for Rule Change" (June 19, 1980).

[4] The difference between putting the proposed change out for comment and enacting it immediately is *entirely* that Commissioner Kennedy's term would expire during the comment period, and the present majority has reason to doubt that a new appointee would join their charade. No armies will march; no navies will sail; no planes will fly as a result of this rule being made immediately effective instead of being put out for comment. Not one iota more or less fuel will be fabricated for the Navy. Nothing remotely resembling a military function will occur. All that will happen is that a civilian commissioner's civilian term on this all-civilian agency will not end before he casts his civilian vote for a change in the agency's civilian rules of practice.

[5] 5 U.S.C. 553.

[6] Senate Committee on the Judiciary, Administrative Procedure Act: Legislative History, S. Doc. No. 248, 79th Cong., 2d Sess. 199, 257 (1947).

[7] In *Bailly*, ALAB-249, 8 AEC 960 (1974) the inability of a party to cross-examine was held sufficient grounds to reopen the hearing. Furthermore, this agency has recognized that "intervenors may build their cases 'defensively' through cross-examination." *Tennessee Valley Authority* (Hartsville Nuclear Plant, Units 1A, 2A, 1B and 2B), ALAB-483, 7 NRC 341, 358 (1978).

[8] *Pacific Molasses Company v. FTC*, 356 F.2d, 386 (5th Cir. 1966). See also *American Farm Lines v. Black Ball*, 397 U.S. 532 (1970).

[9] Indeed, it is possible that the "hearing" offered by the Commission (without an effective mechanism for adjudicating contested material facts) does not satisfy NRDC's right to a hearing as provided for in Section 189 of the Atomic Energy Act.

[10] Atomic Energy Act, Section 181; 10 CFR 2.900 *et seq.*

10 CFR Part 25

Access Authorization Fees for Nuclear Industry

AGENCY: U.S. Nuclear Regulatory Commission.

ACTION: Final rule.

SUMMARY: The Nuclear Regulatory Commission is publishing Appendix A to 10 CFR Part 25 which establishes a fee schedule to cover costs related to the processing of access authorizations for personnel affected by 10 CFR Part 25, "Access Authorization for Licensee Personnel." This fee schedule shall be applied to requests filed by NRC licensees on behalf of their personnel or their contractor personnel, agents, or others who require access to NRC classified information about the protection of nuclear material.

EFFECTIVE DATE: August 4, 1980.

FOR FURTHER INFORMATION CONTACT: Duane G. Kidd, Chief, Security Policy Branch, Division of Security, Office of Administration, United States Nuclear Regulatory Commission, Washington, DC 20555 (301) 427-4415.

SUPPLEMENTARY INFORMATION: CFR Part 25, "Access Authorization for Licensee Personnel," was published in the Federal Register on March 5, 1980. Section 25.17 of Part 25 indicates that access authorization fees will be published in December of each year and will be applicable to each access authorization request received during the following calendar year. Since Part 25 will become effective before December 1980, the fees reflected in Appendix A to Part 25 will be used for the remainder of this calendar year.

These fees are charged for access authorizations processed and services rendered by the Nuclear Regulatory Commission, at the request of an identifiable recipient of the services, and are authorized under Title V of the Independent Offices Appropriation Act of 1952 (65 Stat. 290; 31 U.S.C. 483a).

The fees established in the schedule for both an "L" and "Q" access authorization are identical to those currently charged by the Department of Energy (DOE) under its Access Permit Program. These same fees will be used by the NRC, at least until December 1980. Thereafter, charges may be based on full cost recovery which could significantly affect the cost of an "L" access authorization.

The classified information being protected from unauthorized disclosure through the implementation of Parts 25 and 95 and through the application of the Classification Guide for Safeguards Information (Part 95, Appendix A) should not be classified higher than Secret National Security Information or Confidential Restricted Data. At these levels, only an "L" access authorization is needed by licensee or licensee contractor personnel or others affected by these parts. It is expected that very few, if any, NRC "Q" access authorizations will be required.

The investigative basis for an NRC "L" access authorization is a national agency check conducted by the Office of Personnel Management (OPM) for which NRC is charged $7.25. The investigative basis for an NRC "Q" access authorization is a full field background investigation, also conducted by OPM, for which NRC is charged $950.00. The fees reflected in Appendix A to Part 25 recover these costs plus a part of NRC's overhead associated with the processing of these access authorizations.

Since the fees set forth in Appendix A are based primarily upon the actual amounts charged to NRC by OPM for conducting the investigations, NRC has little control over the charges. Therefore, it is unlikely that public comment would result in reducing any of the fees. Furthermore, in order to keep the fees at the same amount charged by DOE for providing these services, NRC's charges included in the fee for evaluating the investigative data prior to issuing an access authorization are less than NRC's actual costs. Under the circumstances, NRC, for good cause, finds that notice of proposed rulemaking and public procedure thereon are unnecessary. The amendments will become effective 30 days after publication (August 4, 1980).

Pursuant to the Independent Offices Appropriation Act of 1952 (65 Stat. 290; 31 U.S.C. 483a) and 5 U.S.C. 553, notice is hereby given that Appendix A to 10 CFR Part 25 is published as a document subject to codification:

PART 25—ACCESS AUTHORIZATION FOR LICENSEE PERSONNEL

Appendix A to Part 25—Fees for NRC Access Authorization

Category	Fee
Initial "L" Access Authorization	$15
Reinstatement of "L" Access Authorization	*15
Extension or Transfer of "L" Access Authorization	*15
Initial "Q" Access Authorization	1,095
Reinstatement of "Q" Access Authorization	*1,095
Extension or Transfer of "Q"	*1,095

*Full fee will only be charged if investigation is required.

(31 U.S.C. 483a (65 Stat. 290))

Dated at Washington, DC this 19th day of June 1980.

For the Nuclear Regulatory Commission.

William J. Dircks,

Acting Executive Director for Operations.

[FR Doc. 80-20085 Filed 7-2-80; 8:45 am]

BILLING CODE 7590-01-M

10 CFR Parts 25 and 95

Access to and Protection of National Security Information Restricted Data; Extension of Effective Data

AGENCY: U.S. Nuclear Regulatory Commission.

ACTION: Final rule; extension of effective date.

SUMMARY: The Nuclear Regulatory Commission (NRC) is extending from May 19, 1980, to October 1, 1980, the effective date of new 10 CFR Part 25, "Access Authorization for Licensee Personnel," and 10 CFR Part 95, "Security Facility Approval and Safeguarding of National Security Information and Restricted Data." This extension is made in order to provide additional time to furnish necessary administrative guidance to affected licensees, and for licensees to be able to achieve compliance with the regulations.

EFFECTIVE DATE: October 1, 1980.

FOR FURTHER INFORMATION CONTACT: Duane G. Kidd, Chief, Security Policy Branch, Division of Security, Office of Administration, U.S. Nuclear Regulatory Commission, Washington, DC 20555, Telephone: 301-427-4415.

SUPPLEMENTARY INFORMATION: CFR Part 25, "Access Authorization for Licensee Personnel," and 10 CFR Part 95, "Security Facility Approval and Safeguarding of National Security Information and Restricted Data," were published as final rules in the Federal Register on March 5, 1980 (45 FR 14476), each with an effective date of May 19, 1980. In order to provide additional time to furnish necessary administrative guidance to affected licensees, and for the licensees to be able to achieve compliance with the regulations, the NRC is extending the effective date of 10 CFR Parts 25 and 95 to October 1, 1980. Since the amendment relates solely to a minor procedural matter, notice of proposed rulemaking and public

procedure thereon are unnecessary, and good cause exists to make the amendments effective October 1, 1980 in the Federal Register.

In Federal Register Document 80-6526, appearing at pages 14476 thru 14493 of the Federal Register for March 5, 1980, the EFFECTIVE DATE of the final rules, 10 CFR Parts 25 and 95, which appears at page 14476, column 1, is changed from May 19, 1980 to October 1, 1980.

(Sec. 161i, Pub. L. 83-703, 68 Stat. 948, Pub. L. 93-377, 88 Stat. 475; Sec. 201, Pub. L. 93-438, 88 Stat. 1242-2143, Pub. L. 94-79, 89 Stat. 413 (42 U.S.C. 2201, 5841))

Dated at Bethesda, Maryland, this 19th day of June 1980.

For the Nuclear Regulatory Commission.

William J. Dircks,

Acting Executive Director for Operations.

[FR Doc. 80-20106 Filed 7-2-80; 8:45 am]

BILLING CODE 7590-01-M

FEDERAL ELECTION COMMISSION

11 CFR Part 9033

[Notice 1980-24]

Suspension of Primary Matching Fund Payments; Effective Date

AGENCY: Federal Election Commission.

ACTION: Final rule: Announcement of effective date.

SUMMARY: On April 15, 1980, (45 FR 25378) the Commission published the text of regulations to suspend primary matching fund payments to a candidate who knowingly, willfully, and substantially exceeds expenditure limitations. The Commission announces that these regulations are effective as of July 3, 1980.

EFFECTIVE DATE: July 3, 1980.

FOR FURTHER INFORMATION CONTACT: Ms. Patricia Ann Fiori, Assistant General Counsel, 1325 K Street, NW., Washington, D.C. 20463, (202) 523-4143.

SUPPLEMENTARY INFORMATION: 26 USC 9039(c) requires that any rule or regulation prescribed by the Commission to implement Chapter 96 of Title 26, United States Code, be transmitted to the Speaker of the House of Representatives and the President of the Senate prior to final promulgation. If neither House of Congress disapproves the regulations within 30 days after their transmittal, the Commission may finally prescribe the regulations in the question. The regulations being made effective by this notice were transmitted to Congress on April 10, 1980, and 30 legislative days expired as of June 9, 1980.

"11 CFR 9033.9, as published at 45 FR 25379, is effective as of July 3, 1980."

Dated: June 24, 1980.

Max L. Friedersdorf,

Chairman, Federal Election Commission.

[FR Doc. 80-19932 Filed 7-2-80; 8:45 am]

BILLING CODE 6715-01-M

FEDERAL RESERVE SYSTEM

12 CFR Part 225

[Reg.Y, Docket No. R-0312]

Terms Defining Competitive Effects of Proposed Mergers; Revised Interpretation

AGENCY: Board of Governors of the Federal Reserve System.

ACTION: Revision of interpretation.

SUMMARY: The Bank Merger Act (12 U.S.C. 1828(c)) requires the Federal banking agency responsible for deciding a merger application to request reports on competitive factors from the Department of Justice and from the other two banking agencies. The Board is revising an interpretation that defined terms used to describe the competitive effects of proposed mergers. The revision standardizes descriptive terms used by the Board in competitive factor reports with those used by the Federal Deposit Insurance Corporation and the Office of the Comptroller of the Currency.

EFFECTIVE DATE: June 11, 1980.

FOR FURTHER INFORMATION CONTACT: Jack M. Egertson, Assistant Director, Division of Banking Supervision and Regulation (202-452-3408), Board of Governors of the Federal Reserve System, Washington, D.C. 20551.

The Board is revising § 250.182 to read as follows:

§ 250.182 Terms defining competitive effects of proposed mergers.

Under the Bank Merger Act (12 U.S.C. 1828(c)), a Federal Banking agency receiving a merger application must request the views of the other two banking agencies and the Department of Justice on the competitive factors involved. Standard descriptive terms are used by the Board, the Federal Deposit Insurance Corporation, and the Comptroller of the Currency. The terms and their definitions are as follows:

(a) The term "*monopoly*" means that the proposed transaction must be disapproved in accordance with 12 U.S.C. 1828(c)(5)(A).

(b) The term "*substantially adverse*" means that the proposed transaction would have anticompetitive effects which preclude approval unless the anticompetitive effects are clearly outweighed in the public interest by the probable effect of the transaction in meeting the convenience and needs of the community to be served as specified in 12 U.S.C. 1828(c)(5)(B).

(c) The term "*adverse*" means that proposed transaction would have anticompetitive effects which would be material to the decision but which would not preclude approval.

(d) The term "*no significant effect*" means that the anticompetitive effects of the proposed transaction, if any, would not be material to the decision.

Board of Governors of the Federal Reserve System, June 27, 1980.

Griffith L. Garwood,

Deputy Secretary of the Board.

[FR Doc. 80-20070 Filed 7-2-80; 8:45 am]

BILLING CODE 6210-01-M

DEPARTMENT OF TRANSPORTATION

Federal Aviation Administration

14 CFR Part 39

[Docket No. 79-EA-71; Amdt. 39-3829]

Piper Model PA-31T; Airworthiness Directives

AGENCY: Federal Aviation Administration (FAA), DOT.

ACTION: Final rule.

SUMMARY: This amendment adopts an airworthiness directive applicable to Piper PA-31T type airplanes and involves the airplane's high altitude characteristics. As a result of a flight test program it was determined that the airplane exhibited undesirable dynamic characteristics above 20,000 feet in the low speed regime. It required nearly full-time pilot attention to maintain the desired aircraft attitude, which meant high pilot workload. The proposed amendment will limit the minimum speed for the climb and cruise configuration and thus enhance its operation.

EFFECTIVE DATE: July 7, 1980. Compliance is required as set forth in the AD.

FOR FURTHER INFORMATION CONTACT: N. Glenn, Flight Test Section, AEA-216, Engineering and Manufacturing Branch, Federal Building, J.F.K. International Airport, Jamaica, New York 11430; Tel. 212-995-2865.

SUPPLEMENTARY INFORMATION: The Federal Aviation Administration published an NPRM on page 10303 of the Federal Register for February 19, 1980, proposing to issue an airworthiness directive applicable to Piper Model PA-

31T type airplanes. Interested parties were given an opportunity to submit written data or comments. The only comment was from the Corporate Aircraft Center-Southwest and suggested that in view of a 100% compliance in that area with the substance of the proposal, an airworthiness directive was unnecessary. However, Piper records support only approximately 60% compliance and thus the directive must be published as a rule. The focus of the proposal was to alleviate the nearly full-time pilot attention to maintain the desired aircraft attitude when in the low speed regime above 20,000 feet. The manufacturer has revised the longitudinal control system.

Adoption of the Amendment

Accordingly, pursuant to the authority delegated to me by the Administrator, § 39.13 of Part 39 of the Federal Aviation Regulations, 14 CFR 39.13 is amended, by adopting the amendment as published.

Effective date. This amendment is effective July 7, 1980.

(Secs. 313(a), 601, 603, Federal Aviation Act of 1958, as amended, (49 U.S.C. 1354(a), 1421, 1423); sec. 6(c), Department of Transportation Act, (49 U.S.C. 1655(c)); 14 CFR 11.89)

Note.—The Federal Aviation Administration has determined that this document involves a regulation which is not significant under Executive Order 12044 as implemented by Department of Transportation Regulatory Policies and Procedures (44 FR 11034; February 26, 1979).

Issued in Jamaica, New York, on June 23, 1980.

Lonnie D. Parrish,

Acting Director, Eastern Region.

Piper: Applies to Model PA-31T, Serial Numbers 31T-7400002 thru 31T-7620057 and 31T-7720001 thru 31T-7920004 certificated in all categories.

Compliance required within 25 hours in service after the effective date of this AD unless already accomplished.

In order to prevent undesirable high altitude (above 20,000 feet) Longitudinal Dynamic Stability (Phugoid) Characteristics, accomplish the following:

a. Incorporate the applicable Airplane Flight Manual/Pilot's Operating Handbook Revision, as listed below, into the FAA-Delegation Option Authority approved Airplane Flight Manual/Pilot's Operating Handbook in accordance with Piper Instruction, Code 31T-6 dated February 5, 1979, or Piper Instruction Code PFI-31T-790228 dated August 17, 1979.

Airplane Serial Number: 31T-7400002 thru 31T-7620057. AFM/POH Rev. and Part No.: Rev. 11-761 560 (AFM). AFM Rev. No.: 790228. Date: 2/28/79.

Airplane Serial Number: 31T-7720001 thru 31T-7920004. AFM/POH Rev. and Part No.: Rev. 5-761 625 (POH). AFM Rev. No.: 781006. Date: 10/6/78.

b. Upon submission of substantiating data by an owner or operator through an FAA Maintenance Inspector, the Chief, Engineering and Manufacturing Branch, FAA, Eastern Region may adjust the inspection intervals specified in this AD.

c. The manufacturer's specifications and procedures identified and described in this directive are incorporated herein and made a part hereof pursuant to 5 U.S.C. 552(a)(1.) All persons affected by this directive who have not already received these documents from the manufacturer may obtain copies upon request to Piper Aircraft Corporation, 820 E. Bald Eagle Street, Lock Haven, Pennsylvania 17745. These documents may also be examined at the Eastern Region, Federal Aviation Administration, Federal Building, JFK International Airport, Jamaica, New York 11430, and at FAA headquarters, 800 Independence Avenue, SW., Washington, D.C. A historical file on this AD which includes the incorporated material in full is maintained by the FAA at its headquarters in Washington, D.C., and at the Eastern Region.

[FR Doc. 80-19804 Filed 7-2-80; 8:45 am]
BILLING CODE 4910-13-M

---

14 CFR Part 39

[Docket No. 79-EA-63; Amdt. 39-3824]

DeHavilland Model DHC-6 Series Airplanes; Airworthiness Directives

AGENCY: Federal Aviation Administration (FAA), DOT.

ACTION: Final rule.

SUMMARY: This amendment amends an existing Airworthiness Directive Amendment 39-1175 (AD 69-05-01), applicable to DeHavilland DHC-6 type airplanes, which required an inspection of the control column lower sub-assembly for cracks. This amendment permits replacement of the sub-assembly with a different part number. When the new part number is used, the repetitive inspections are eliminated. This results from the recommendations of the manufacturer.

EFFECTIVE DATE: July 7, 1980. Compliance is required as set forth in the AD.

ADDRESSES: DeHavilland Service Bulletins may be acquired from the manufacturer at Downsview, Ontario, Canada M3K 145.

FOR FURTHER INFORMATION CONTACT: A. Maila, Airframe Section, AEA-212, Engineering and Manufacturing Branch, Federal Building, J.F.K. International Airport, Jamaica, New York 11430; Tel. 212-995-2875.

SUPPLEMENTARY INFORMATION: This is a relaxatory amendment and allows the replacement of parts with new parts which will eliminate repetitive inspections when DeHavilland's modification 6/1433 is incorporated. Thus, since there is no additional burden on any person, notice and public procedure are unnecessary, and the amendment may be made effective in less than 30 days.

Adoption of the Amendment

Accordingly, and pursuant to the authority delegated to me by the Administrator, § 39.13 of Part 39 of the Federal Aviation Regulations (14 CFR 39.13) is amended, by amending Amendment 39-1175 (AD 69-05-01) as follows:

1. Add Paragraphs (d) and (e) to read as follows:

* * * * *

(d) Cracked parts, P/N C3CF39-17, may be replaced with a new sub-assembly, P/N C3CF39-19, in accordance with DeHavilland Modification No. 6/1433 in DeHavilland Service Bulletin (S/B) No. 6/180, Revision D, dated April 30, 1976, Accomplishment Instructions No. 5, or with an equivalent approved by the Chief, Engineering and Manufacturing Branch, FAA, Eastern Region.

(e) The repetitive inspection required by (a) may be discontinued when the lower sub-assembly is replaced by P/N C3CF39-19 in accordance with DeHavilland Modification No. 6/1433, or FAA approved equivalent.

Effective date. The amendment becomes effective July 7, 1980.

(Secs. 313(a), 601, 603, Federal Aviation Act of 1958, as amended (49 U.S.C. 1354(a), 1421, 1423); sec. 6(c), Department of Transportation Act (49 U.S.C. 1655(c)); 14 CFR 11.89)

Note.—The Federal Aviation Administration has determined that this document involves a regulation which is not significant under Executive Order 12044 as implemented by Department of Transportation Regulatory Policies and Procedures (44 FR 11034; February 26, 1979).

Issued in Jamaica, New York, on June 23, 1980.

Lonnie D. Parrish,

Acting Director, Eastern Region.

[FR Doc. 80-19811 Filed 7-2-80; 8:45 am]
BILLING CODE 4910-13-M

---

14 CFR Part 39

[Docket No. 79-EA-69, Amdt. 39-3825]

Semco Hot Air Balloons, T, TC4-A and Challenger Models; Airworthiness Directives

AGENCY: Federal Aviation Administration (FAA), DOT.

ACTION: Final rule.

SUMMARY: This amendment issues a new airworthiness directive, applicable to Semco Models T, TC4-A and Challenger type hot air balloons, which requires an inspection of the diamond

aluminum fittings on the gondola for cracks and replacement where necessary. It also requires modifying the canvas siding by extending it down to and securing it to the gondola floor. The type certificate holder, after investigation, recommended fitting inspections, and the chance of a limb slipping through the space between the siding and the floor required the alteration since an injury could occur.

EFFECTIVE DATE: July 7, 1980. Compliance is required as set forth in the AD.

ADDRESSES: Semco Service Bulletins may be acquired from the manufacturer at c/o Eagle Balloons, Ltd., Hangar No. 2, Hanover County Airport, Ashland, Virginia 23005.

FOR FURTHER INFORMATION CONTACT: A. Maila, Airframe Section, AEA-212, Engineering and Manufacturing Branch, Federal Building, J.F.K. International Airport, Jamaica, New York 11430; Tel. 212-995-2875.

SUPPLEMENTARY INFORMATION: There had been reports of injuries to the feet of passengers when the balloon had been turned on its side due to unfavorable winds. It appears that the foot of a passenger had slipped through the space between the canvas siding and the floor of the gondola causing an injury. Since this problem can arise with similarly designed gondolas, an airworthiness directive is being issued requiring a closing of the space and an inspection of the fittings attaching the corner posts of the siding to the floor. In view of the air safety aspect of the problem, notice and public procedure herein are impractical and cause exists for making the amendment effective in less than 30 days.

Adoption of the Amendment

Accordingly, pursuant to the authority delegated to me by the Administrator, § 39.13 of Part 39 of the Federal Aviation Regulations, 14 CFR 39.13 is amended, by adding the following new Airworthiness Directive:

Semco: Applies to Semco Hot Air Balloon Model TC-4A, S/N SEM 81 and subsequent; Model T, S/N SEM 78 and subsequent; Challenger, S/N SEM 25 and subsequent, equipped with tubular aluminum gondolas covered with chair duck canvas.

Compliance required as indicated below after the effective date of this AD. To preclude failure of the gondola structural fittings and to alter the gondola chair duck canvas, accomplish the following:

1. Before next flight, and each flight thereafter:

a. Visually check all Diamond aluminum fittings for cracks, in the tongue radius area, on the following models:

Model number and fitting

	Dash No.	P/N	Quantity
Model TC-4A Dwg. No. 1	11	No. 150	4
	14	No. 158	8
	28	No. 115	4
	4	No. 103	8
Model T Dwg. No. 1	4	No. 150	4
	5	No. 158	8
	3	No. 115	4
	6	No. 103	8
Challenger Dwg. No. 1	3	No. 150	4
	6	No. 158	8
	9	No. 115	4
	11	No. 103	8

Rework existing plywood floor as shown below.

b. Replace cracked parts with new parts before next flight.

2. Secure the gondola chair duck canvas siding to the gondola floor using grommets in the lower portion of the canvas. Extend the existing canvas using a 3/8" french fell seam per Advisory Circular 43.13-1A, Chapter 3, Page 85. Hem the bottom of the canvas and install grommets as noted in sketch below.

BILLING CODE 4910-13-M

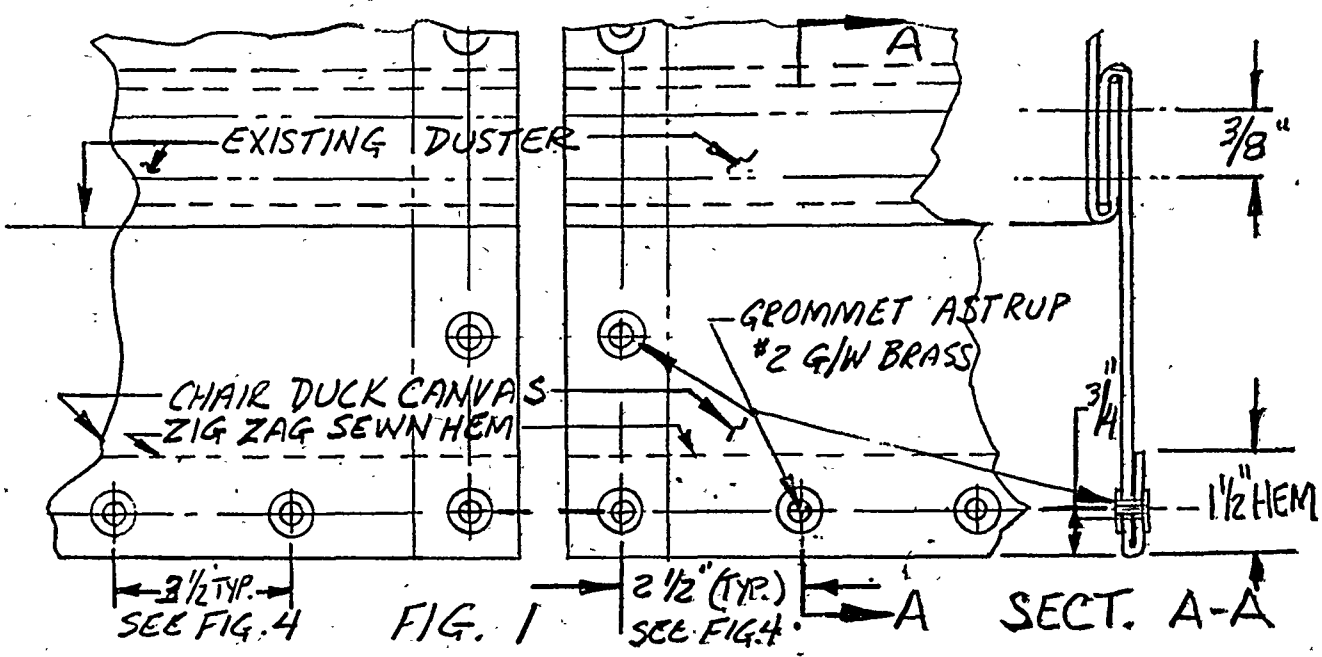

FIG. 1

Rework existing plywood floor as shown below.

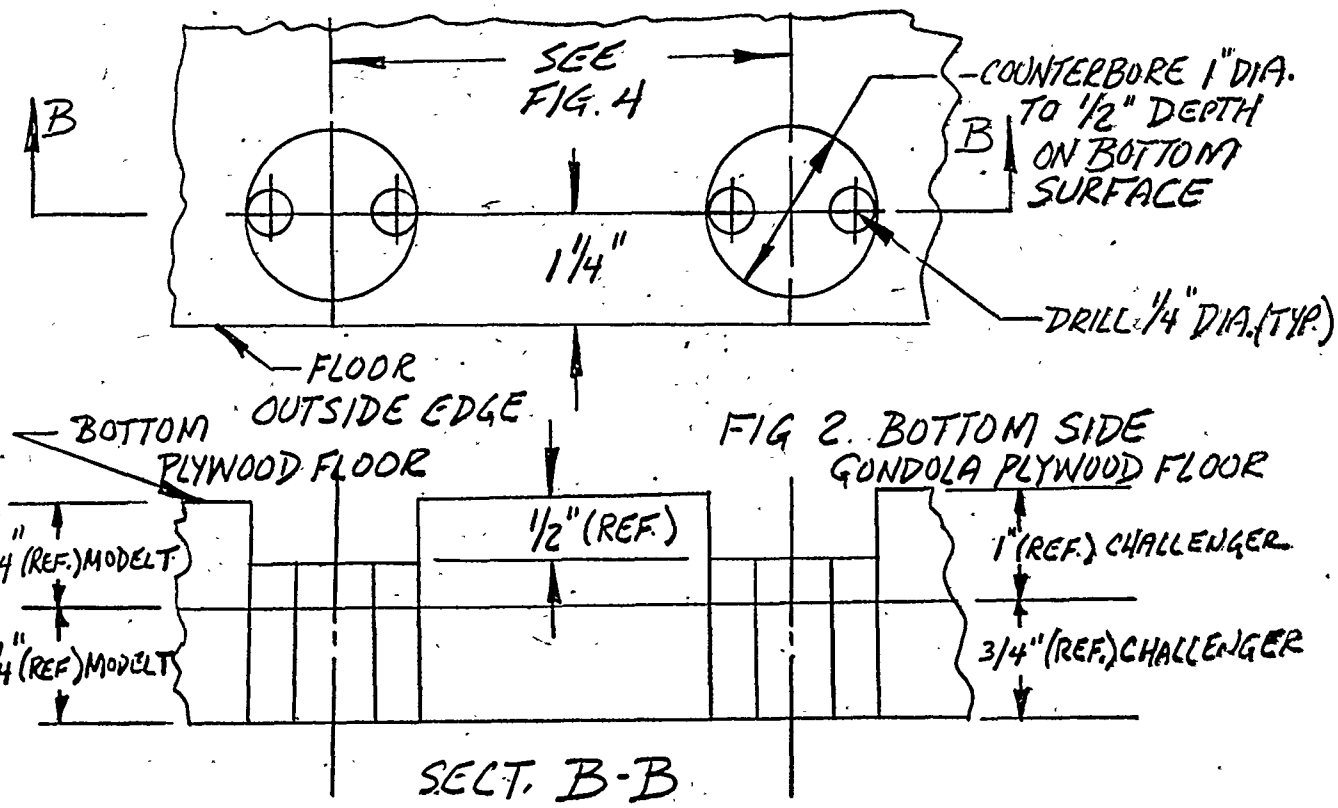

FIG 2. BOTTOM SIDE
GONDOLA PLYWOOD FLOOR

BILLING CODE 4910-13-C

Lace canvas to plywood floor using ¼" diameter braided nylon line as shown.

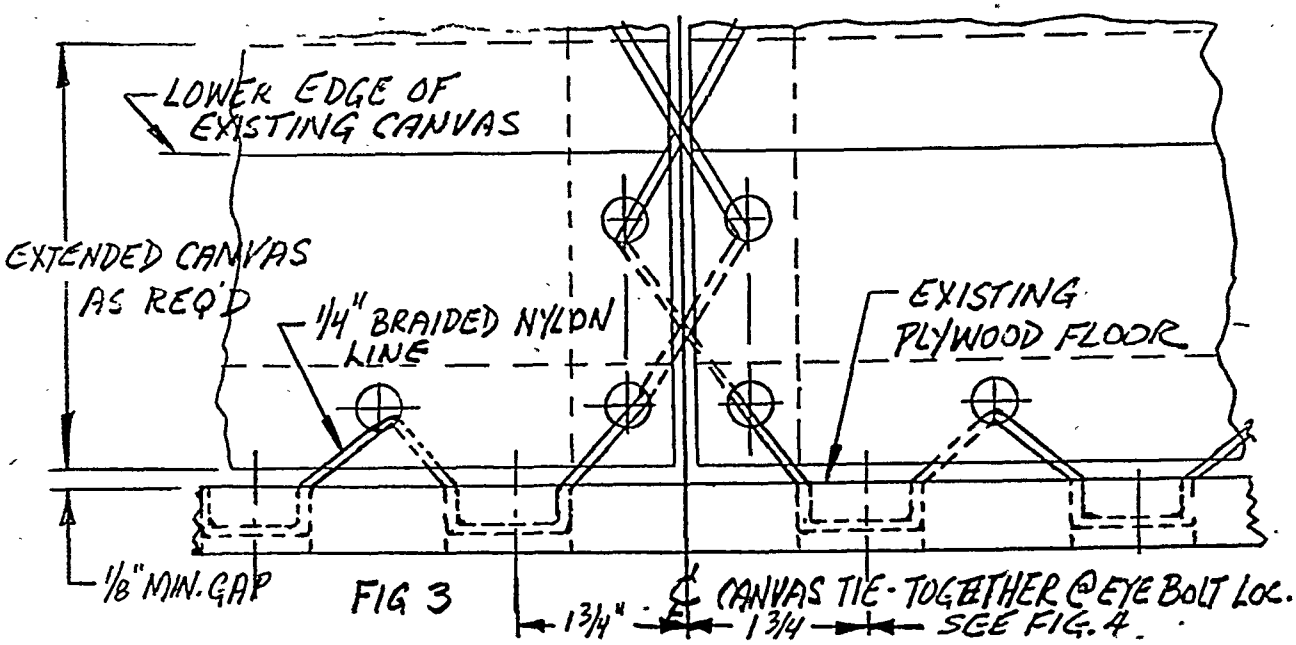

3. Within the next 100 hours or next annual inspection, whichever occurs first accomplish the following:

a. Remove Diamond aluminum slip-on fittings noted in paragraph 1.a.

b. Clean surfaces as necessary and visually inspect for cracks by dye penetrant with a glass of at least 10 power, or equivalent, particularly in the tongue radius area.

c. If no cracks are found, the Diamond aluminum slip-on fittings may be returned to service.

d. Replace cracked parts with unused parts prior to next flight.

4. The repetitive inspection in paragraph (3) is to be accomplished at intervals not to exceed 100 hours in service or annually thereafter, whichever occurs first.215.5. Equivalent inspections, alterations and replacement parts must be approved by the Chief, Engineering and Manufacturing Branch, FAA, Eastern Region.

6. Upon submission of substantiating data by an owner, or operator through an FAA Maintenance Inspector, the Chief, Engineering and Manufacturing Branch, FAA, Eastern Region, may adjust the compliance times specified in this AD.

BILLING CODE 4910-13-M

PLANVIEW - FLOOR UNDERSIDE

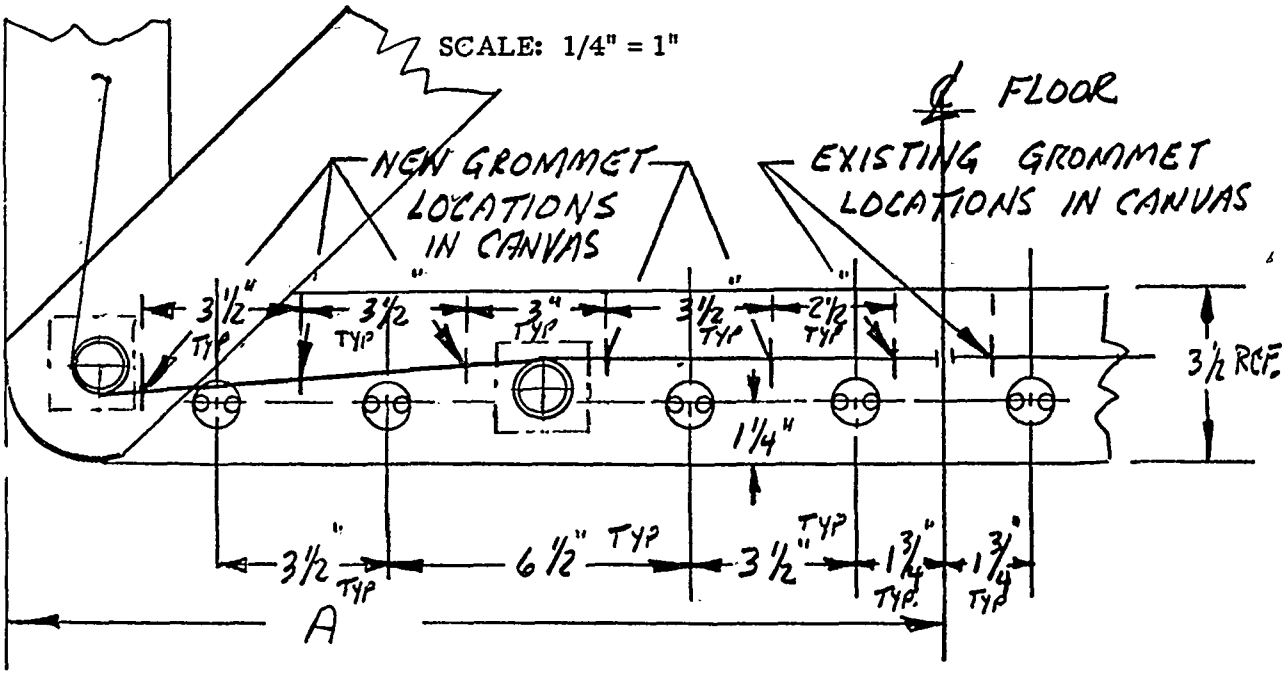

FIG. 4

MODEL	A
MODEL T	20"
CHALLENGER	21"

BILLING CODE 4910-13-C

Effective Date. This amendment is effective July 7, 1980.

(Secs. 313(a), 601 603, Federal Aviation Act of 1958, as amended, (49 U.S.C. 1354(a), 1421, 1423); sec. 6(c), Department of Transportation Act, (49 U.S.C. 1655(c)); and 14 CFR 11.89)

Note.— The Federal Aviation Administration has determined that this document involves a regulation which is not significant under Executive Order 12044 as implemented by Department of Transportation Regulatory Policies and Procedures (44 FR 11034; February 26, 1979).

Issued in Jamaica, New York, on June 23, 1980.

Lonnie D. Parrish,

Acting Director, Eastern Region.

[FR Doc. 80-19812 Filed 7-2-80; 8:45 am]

BILLING CODE 4910-13-M

---

14 CFR Part 39

[Docket No. 80-EA-22; Amdt. 39-3827]

Boeing Vertol Model 107-II; Airworthiness Directives

AGENCY: Federal Aviation Administration (FAA), DOT.

ACTION: Final Rule.

SUMMARY: This amendment amends AD 64-21-6, applicable to Boeing Vertol 107-II type rotorcraft, and requires additional inspection for cracks in the lug area of the pitch housing of the main rotor blades. This results from a finding of fatigue failures of lower trailing lugs during inspections. Undetected lug failures could result in other lug failures and loss of the blade.

EFFECTIVE DATE: July 7, 1980. Compliance is required as set forth in the AD.

ADDRESSES: Boeing Vertol Service Bulletins may be acquired from the manufacturer at P.O. Box 16858, Philadelphia, Pa. 19142.

FOR FURTHER INFORMATION CONTACT: J. E. Chrastil, Airframe Section, AEA-212, Engineering and Manufacturing Branch, Federal Building, J.F.K. International Airport, Jamaica, New York 11430; Tel. 212-995-2875.

SUPPLEMENTARY INFORMATION: The outboard end of the pitch housing of the main rotor blades has four lugs, two forward and two aft, through which vertical taper-pins pass. Mating the four lugs are eight lugs of the main blade socket, the above mentioned taper-pins pass through the four lugs of the pitch housing and the eight lugs of the main blade socket. The blade socket is attached to the root end of the main rotor blade. The "joint" covered by this AD amendment is the pitch housing lugs/main blade socket lugs attachment accomplished by vertical taper-pins.

Three fatigue failures of a lower trailing lug of the main rotor pitch housings have been found in service during visual inspections or upon blade removal for routine maintenance since AD 64-21-6 was issued.

If a failure occurred and was to go undetected, it could lead to the failure of another lug and subsequent loss of a main rotor blade.

The joint has been analyzed in accordance with the requirements of FAR 29.571 Paragraph (d), "Failsafe Evaluation" and it complies provided the inspection procedures called for in this AD amendment are accomplished. Since a situation exists that requires the immediate adoption of this regulation, it is found that notice and public procedure hereon are impracticable and good cause exists for making this amendment effective in less than 30 days.

Adoption of the Amendment

Accordingly, pursuant to the authority delegated to me by the Administrator, § 39.13 of Part 39 of the Federal Aviation Regulations, 14 CFR 39.13 is amended, by amending AD 64-21-6 as follows:

Amend Airworthiness Directive 64-21-6, as follows:

Add a new paragraph (f) and revise paragraph (d) and (e), all to read as follows:

(d) Unless already accomplished, within the next 50 hours in service on pitch housing 107R2553-8, -10, -14, -16, with 1000 hours or more in service and within the next 100 hours in service on pitch housing 107R2553-7, -9, -13, -15, with 2000 hours or more in service install crack detector wire in accordance with Part I "Installation Procedure" of Boeing Service Bulletin No. 107-343 dated March 10, 1980, or equivalent.

(1) Inspect for cracks in accordance with Part II "Inspection Procedures" of the above Bulletin, or equivalent, the lug area of pitch housings 107R2553-8, -10, -14, -16, with 1000 hours or more in service within the next 50 hours in service and thereafter at intervals not to exceed 25 hours in service, and pitch housing 107R2553-7, -9, -13, -15, with 2000 hours or more in service within the next 100 hours in service and thereafter at intervals not to exceed 50 hours in service.

(2) Unless already accomplished, install crack detector wire in accordance with Part I "Installation Procedure" of the above Bulletin, or equivalent on pitch housings 107R2553-8, -10, -14, -16, with less than 1000 hours in service prior to the accumulation of 1050 hours in service, and on pitch housings 107R2553-7, -9, -13, -15, with less than 2000 hours in service prior to the accumulation of 2100 hours in service.

(3) Inspect pitch housings 107R2553-8, -10, -14, -16, with less than 1000 hours in service in accordance with (1) prior to accumulation of 1050 hours in service. Inspect pitch housings 107R2553-7, -9, -13, -15, with less than 2000 hours in service in accordance with (1) prior to accumulation of 2100 hours in service.

(4) Conduct a visual inspection for cracks in the lug area of blade sockets 42R1043-11, -12, -13, and -14 at intervals not to exceed 50 hours in service. This may be accomplished without disassembly from the helicopter.

(e) If any cracks are found replace the part before further flight with a part found serviceable in accordance with this AD.

(f) Upon request with substantiating data submitted through an FAA Maintenance Inspector, the compliance times specified in this AD may be adjusted by the Chief, Engineering and Manufacturing Branch, FAA Eastern Region.

In paragraph (g) change "4000 hours" to read "5000 hours".

Effective date. This amendment is effective July 7, 1980.

(Secs. 313(a), 601, 603, Federal Aviation Act of 1958, as amended, (49 U.S.C. 1354(a), 1421, 1423); sec. 6(c), Department of Transportation Act, (49 U.S.C. 1655(c); 14 CFR 11.89)

Note.—The Federal Aviation Administration has determined that this document involves a regulation which is not significant under Executive Order 12044 as implemented by Department of Transportation Regulatory Policies and Procedures (44 FR 11034; February 26, 1979).

Issued in Jamaica, New York, on June 3, 1980.

Lonnie D. Parrish

Acting Director, Eastern Region.

[FR Doc. 80-19813 Filed 7-2-80; 8:45 am]

BILLING CODE 4910-13-M

---

14 CFR Part 39

[Docket No. 80-EA-21; Amdt. 39-3826]

Avco Lycoming 0-320-H, 0-360-E, and LO-360-E Series Engines; Airworthiness Directives

AGENCY: Federal Aviation Administration (FAA), DOT.

ACTION: Final rule.

SUMMARY: This amendment issues a new airworthiness directive, applicable to Avco Lycoming 0-320-H, 0-360-E, and LO-360-E type engines. It requires an inspection of all upper exhaust valve seat identification characters to assure proper parts and replacement of improper parts. This results from the distribution by the manufacturer of valves with inadequate hardening procedures. The improper valves with soft seats when failed will cause the retaining keys to disengage and resultant valve failure.

EFFECTIVE DATE: July 7, 1980. Compliance is required as set forth in the AD.

ADDRESSES: Avco Lycoming Service Bulletins may be acquired from the manufacturer at Williamsport, Pa. 17701.

FOR FURTHER INFORMATION CONTACT: I. Mankuta, Propulsion Section, AEA-214, Engineering and Manufacturing Branch, Federal Building, J.F.K. International Airport, Jamaica, New York 11430; Tel. 212-995-2875.

SUPPLEMENTARY INFORMATION: There had been a report that in order to expedite the availability of parts for compliance with a previous AD, Lycoming advised their supplier of exhaust valve spring seats P/N LW-16475 that they need not have the specified hardness. It was Lycoming's intent to heat treat these parts to the correct hardness through their own factory procedure. However, Lycoming's metallurgical hardening procedure was found inadequate resulting in failure of the seat thereby causing the exhaust valve retaining keys to disengage. This further caused the failure of the exhaust valve.

To assure that no "soft" seats would be installed when complying with AD 80-04-03, the AD specified replacing all LW-16475 seats with the hardened seats identified with Part No. LW16475-KLI. This amendment is being issued to ensure compliance with Lycoming S/B 447 and will apply to those operators who have complied with S/B 435 prior to issuance of AD 80-04-03 and who may have unknowingly installed soft seats. Since a situation exists that requires the immediate adoption of this regulation, it is found that notice and public procedure hereon are impracticable and good cause exists for making this amendment effective in less than 30 days.

Adoption of the Amendment

Accordingly, pursuant to the authority delegated to me by the Administrator, § 39.13 of Part 39 of the Federal Aviation Regulations, 14 CFR 39.13 is amended, by adding the following new Airworthiness Directive:

Avco Lycoming: Applies to 0-320-H series engines, S/Ns L-101-76 thru L-7608-76; 0-360-E series engines, S/Ns L-101-77 thru L-455-77; LO-360-E series engines, S/Ns L-101-72 thru L-451-72 and all remanufactured engines of these models shipped prior to November 16, 1979.

Compliance required as indicated, unless already accomplished.

To prevent failure of valves due to installation of improperly hardened upper exhaust valve spring seats, accomplish the following:

Within the next 25 hours in service after the effective date of this AD remove the valve rocker box covers and visually inspect all upper exhaust valve spring seats for part number identification.

(a) If all four upper exhaust valve spring seats are identified as Part Number LW-16475 followed by the letter "KLI", in a curved pattern as shown in Lycoming Service Bulletin No. 447, the engine may be returned to service.

(b) If any of the upper exhaust valve spring seats are identified as Part Number LW-16475 without the letters "KLI", they must be removed and placed with seats market as described in paragraph (a) above. Installation of these valve spring seats shall be accomplished per instructions in AVCO Lycoming S/B No. 435 or Lycoming Overhaul Manual P/N 60294-9 or an approved alternate.

Compliance with paragraph (a) of AD 80-04-03 or AVCO Lycoming S/B 447 dated January 11, 1980, will constitute compliance with the requirements of this AD.

Equivalent methods of compliance may be approved by the Chief, Engineering and Manufacturing Branch, Federal Aviation Administration (FAA) Eastern Region.

Upon submission of substantiating data by an owner or operator through an FAA Maintenance Inspector, the Chief, Engineering and Manufacturing Branch, FAA, Eastern Region may adjust the compliance time specified in this AD.

Effective date. This amendment is effective July 7, 1980.

(Secs. 313(a), 601, 603, Federal Aviation Act of 1958, as amended, (49 U.S.C. 1354(a), 1421, 1423); sec. 6(c), Department of Transportation Act, (49 U.S.C. 1655(c)); 14 CFR 11.89)

Note.—The Federal Aviation Administration has determined that this document involves a regulation which is not significant under Executive Order 12044 as implemented by Department of Transportation Regulatory Policies and Procedures (44 FR 11034; February 26, 1979).

Issued in Jamaica, New York, on June 23, 1980.

Lonnie D. Parrish,

Acting Director, Eastern Region.

[FR Doc. 80-19814 Filed 7-2-80; 8:45 am]

BILLING CODE 4910-13-M

---

14 CFR Part 39

[Docket No. 20490; Amdt. 39-3833]

Societe Nationale Industrielle Aerospatiale Model AS-350 Series Helicopters; Airworthiness Directives

AGENCY: Federal Aviation Administration (FAA), DOT.

ACTION: Final rule.

SUMMARY: This action publishes in the Federal Register and makes effective as to all persons an amendment adopting a new airworthiness directive (AD) which was previously made effective as to all known U.S. owners and operators of Societe Nationale Industrielle Aerospatiale Model AS-350 series helicopters by individual telegrams. The AD requires inspection of the flange blending radius for cracks, replacement as necessary, and repetitive inspection until a steel flange is installed. The AD is necessary to detect cracks which could cause failure of the rotor system and loss of the helicopter.

DATES: Effective July 3, 1980, as to all persons except those persons to whom it was made immediately effective by the telegram issued April 23, 1979, which contained this amendment.

Compliance schedule—as prescribed in the body of the AD.

ADDRESSES: The applicable work cards and service bulletin may be obtained from: Societe Nationale Industrielle Aerospatiale (SNIAS), 37, blvd. de Montmorency, 75781 Paris Cedex 16, France.

A copy of the service bulletin is contained in the Rules Docket, Room 916, 800 Independence Avenue, SW., Washington, D.C. 20591.

FOR FURTHER INFORMATION CONTACT: Don C. Jacobsen, Chief, Aircraft Certification Staff, AEU-100, Europe, Africa, and Middle East Office, Federal Aviation Administration, c/o American Embassy, Brussels, Belgium, Telephone 513.38.30, or C. Christie, Chief, Technical Standards Branch, AWS-110, Federal Aviation Administration, 800 Independence Avenue, SW., Washington, D.C. 20591, Telephone: 202-426-8374.

SUPPLEMENTARY INFORMATION: On April 23, 1979, a telegraphic airworthiness directive was issued and made effective immediately as to all known U.S. owners and operators of Societe Nationale Industrielle Aerospatiale Model AS-350 series helicopters. The AD required an inspection of the flange blending radius for cracks, replacement if cracks are found, and repetitive inspection until a steel flange is installed. The AD was necessary because the FAA determined that cracks can develop in the flange, which could lead to failure of the rotor system and loss of the helicopter.

Since it was found that immediate corrective action was required, notice and public procedure thereon were impracticable and contrary to the public interest and good cause existed for making the AD effective immediately to all known U.S. owners and operators of Societe Nationale Industrielle Aerospatiale Model AS-350 series helicopters by individual telegrams issued April 23, 1979. These conditions still exist and the AD is hereby published in the Federal Register as an amendment to § 39.13 of Part 39 of the Federal Aviation Regulations to make it effective as to all persons.

Adoption of the Amendment

Accordingly, pursuant to the authority delegated to me by the Administrator, § 39.13 of Part 39 of the Federal Aviation Regulations (14 CFR 39.13) is amended by adding the following new airworthiness directive:

Societe Nationale Industrielle Aerospatiale (SNIAS). Applies to Model AS-350 series helicopters with flange, P/N 350A371201-20 installed, certificated in all categories.

To prevent the failure of flange P/N 350A371201-20, accomplish the following:

(a) Within the next five hours time in service after the effective date of this AD, and thereafter at intervals not to exceed 25 hours time in service from the last inspection until a steel flange P/N 350A371207-20 is installed, inspect the flange P/N 350A371201-20 for cracks using the dye penetrant method as follows:

(1) Remove the vibration damper in accordance with Aerospatiale Maintenance Work Card 65.12.403, dated February 1979, or an FAA-approved equivalent. Do not remove flange.

(2) Clean the flange P/N 350A371201-20 with soapy water and a non-metallic brush.

(3) Apply the dye penetrant to the flange blending radius to the cylindrical section, being careful to protect the adjacent areas against splashing.

(b) If, during an inspection required by paragraph (a) or (d) of this AD, no cracking is found, reinstall the vibration damper in accordance with Aerospatiale Maintenance Work Card 65.12.403, dated February 1979, or an FAA-approved equivalent, return the assembly to service, and continue to inspect in accordance with paragraph (a) or (d) of this AD, as appropriate.

(c) If, during an inspection required by paragraph (a) or (d) of this AD, cracking is found, before further flight—

(1) Replace the flange in accordance with Aerospatiale Maintenance Work Card 65.12.401, dated June 1977, or an FAA-approved equivalent, with a crack-free new or serviceable used flange of the same part number and accomplish the repetitive inspection required by paragraph (d) of this AD. (Before installation of a used flange, inspect it in accordance with the method specified in paragraph (a) of this AD to ensure that it is crack-free); or

(2) Install a steel flange, P/N 350A371207-20 (also identified as modification AMS 6063).

(d) Within the next 25 hours time in service after flange replacement in accordance with paragraph (c)(1) of this AD, and thereafter at intervals not to exceed 25 hours time in service from the last inspection, inspect flange P/N 350A371201-20 in accordance with the method specified in paragraph (a) of this AD.

(e) Upon installation of a steel flange P/N 350A371207-20, inspections required by paragraphs (a) and (b) of this AD may be discontinued.

(f) For purposes of this AD, an FAA-approved equivalent must be approved by the Chief, Aircraft Certification Staff, FAA, Europe, Africa, and Middle East Office.

Note.—SNIAS (Aerospatiale) Mandatory Service Bulletin 05-03, dated May 10, 1979, pertains to this same subject.

This amendment becomes effective July 3, 1980, as to all persons except those persons to whom it was made immediately effective by the telegram issued April 23, 1979, which contained this amendment.

(Secs. 313(a), 601, 603, Federal Aviation Act of 1958, as amended (49 U.S.C. 1354(a), 1421, and 1423); sec. 6(c), Department of Transportation Act (49 U.S.C. 1655(c)); (14 CFR 11.89))

Note.—The FAA has determined that this document involves a regulation which is not significant under Executive Order 12044, as implemented by Department of Transportation Regulatory Policies and procedures (44 FR 11034; February 26, 1979).

Issued in Washington, D.C., on June 20, 1980.

M. C. Beard,

Director of Airworthiness.

[FR Doc. 80-19618 Filed 7-2-80; 8:45 am]

BILLING CODE 4910-13-M

---

14 CFR Part 71

[Airspace Docket No. 80-NE-26]

Designation of Federal Airways, Area Low Routes, Controlled Airspace and Reporting Points; Alteration to the Descriptions of the Bangor, Maine, Control Zone

AGENCY: Federal Aviation Administration (FAA), DOT.

ACTION: Final rule.

SUMMARY: This amendment changes the description of the Bangor, Maine, control zone. The present description of the Bangor, Maine, control zone makes reference to the Levant Private Landing Area, West Levant, Maine. As this landing area has been abandoned it is necessary to revise the description accordingly.

EFFECTIVE DATE: July 3, 1980.

FOR FURTHER INFORMATION CONTACT: Richard G. Carlson, Operations Procedures and Airspace Branch, ANE-536, Federal Aviation Administration, Air Traffic Division, 12 New England Executive Park, Burlington, Massachusetts 01803; telephone (617) 273-7285.

SUPPLEMENTARY INFORMATION: The FAA is amending Subpart F of the Federal Aviation Regulations (14 CFR Part 71) so as to change the description of the Bangor, Maine, control zone.

The present description of the Bangor, Maine, control zone is described with reference to the Levant Private Landing Area, West Levant, Maine. It is necessary to revise the description because the landing area has been abandoned.

As this revision is editorial in nature and does not change in any way the dimensions of the control zone, notice and public procedure hereon are unnecessary, and the amendment may be made effective in less than 30 days.

Adoption of the Amendment

Accordingly, pursuant to the authority delegated to me by the Administrator, § 71.171 of the Federal Aviation Regulations (14 CFR Part 71) is amended as follows:

Amend § 71.171 of Part 71 of the Federal Aviation Regulations by amending the description of the Bangor, Maine, control zone to read as follows:

After 8 miles northwest of the VORTAC, delete,

"Within a one mile radius of the center latitude: 44°53'56"N, Longitude: 69°01'12"W of Levant Private Landing area, West Levant, Maine,"

Then as previously described beginning at,

"Within 3.5 miles each side of the Bangor ILS."

(Sec. 307(a), Federal Aviation Act of 1958 (72 Stat. 49 U.S.C. 1348(a)); sec. 6(c), Department of Transportation Act (49 U.S.C. 1655(c) and 14 CFR 11.69))

Note.—The FAA has determined that this document involves a regulation which is not considered to be significant under the procedures and criteria prescribed by Executive Order 12044 and as implemented by Interim Department of Transportation guidelines (43 FR 9582; March 8, 1979). The anticipated impact is so minimal that this action does not warrant preparation of a regulatory evaluation.

Issued in Burlington, Mass., on June 20, 1980.

Robert E. Whittington,

Director, New England Region.

[FR Doc. 80-19620 Filed 7-2-80; 8:45 am]

BILLING CODE 4910-13-M

---

14 CFR Part 71

[Airspace Docket No. 80-WE-5]

Alteration of Transition Area

AGENCY: Federal Aviation Administration (FAA), DOT.

ACTION: Final rule.

SUMMARY: This rule redesignates an extension in the Douglas, Arizona, transition area. This action provides controlled airspace required to protect instrument flight operations for the Bisbee-Douglas International Airport.

EFFECTIVE DATES: September 4, 1980.

FOR FURTHER INFORMATION CONTACT: Mr. Thomas W. Binczak, Airspace and Procedures Branch, Air Traffic Division, Federal Aviation Administration, 15000 Aviation Boulevard, Lawndale, California 90261, telephone: (213) 536-6182.

SUPPLEMENTARY INFORMATION:

History

On May 12, 1980, the FAA proposed to amend Part 71 of the Federal Aviation Regulations (14 CFR Part 71) to redesignate the transition area for Douglas, Arizona (45 FR 31129). Redesignation of this transition area will provide controlled airspace for protection of instrument operations at the Bisbee-Douglas Airport. Interested persons were invited to participate in the rulemaking proceeding by submitting comments on the proposal to the FAA. No comments objecting to the proposal were received. This amendment is the same as that proposed in the notice. Section 71.181 was republished in the Federal Register on January 2, 1980 (45 FR 445).

The Rule

This amendment to Part 71 of the Federal Aviation Regulations (14 CFR Part 71) redesignates the transition area at Douglas, Arizona. This transition area provides protection for instrument operations authorized for the Bisbee-Douglas Airport. This amendment increases air traffic safety and improves flow control procedures.

Adoption of the Amendment

Accordingly, pursuant to the authority delegated to me by the Administrator, § 71.181 of Part 71 of the Federal Aviation Regulations (14 CFR Part 71) as republished (45 FR 445) is amended, effective 0901 GMT, September 4, 1980, as follows:

§ 71.181 Douglas, Arizona.

Delete all between "* * * within 4.5 miles southwest and 9.5 miles northeast * * *" and substitute therein "* * * within 4.5 miles northeast and 9.5 miles southwest * * *"

(Secs. 307(a), 313(a), Federal Aviation Act of 1958 (49 U.S.C. 1348(a), 1354(a)); sec. 6(c), Department of Transportation Act (49 U.S.C. 1655(c)); 14 CFR 11.69)

The FAA has determined that this document involves a regulation which is not significant under Executive Order 12044, as implemented by DOT Regulatory Policies and Procedures (44 FR 11034; February 26, 1979). Since this regulatory action involves an established body of technical requirements for which frequent and routine amendments are necessary to keep them operationally current and promote safe flight operations, the anticipated impact is so minimal that this action does not warrant preparation of a regulatory evaluation.

Issued in Los Angeles, California on June 19, 1980.

W. R. Frehse,

Acting Director, Western Region.

[FR Doc. 80-19621 Filed 7-2-80; 8:45 am]

BILLING CODE 4910-13-M

---

14 CFR Part 71

[Airspace Docket No. 80-ASW-21]

Alteration of Transition Area; Castroville, Tex.

AGENCY: Federal Aviation Administration (FAA), DOT.

ACTION: Final rule.

SUMMARY: The nature of the action being taken is to alter the transition area at Castroville, Tex. The intended effect of the action is to provide additional controlled airspace for aircraft executing a new instrument approach procedure to the Castroville Municipal Airport. The circumstance which created the need for the action is the scheduled installation of an instrument landing system (ILS) at the Castroville Municipal Airport. In addition, higher performance aircraft are using the airport, which requires additional airspace.

EFFECTIVE DATE: July 10, 1980.

FOR FURTHER INFORMATION CONTACT: Kenneth L. Stephenson, Airspace and Procedures Branch (ASW-535), Air Traffic Division, Southwest Region, Federal Aviation Administration, P.O. Box 1689, Fort Worth, Texas 76101; telephone 817-624-4911, extension 302.

SUPPLEMENTARY INFORMATION:

History

On May 8, 1980, a notice of proposed rule making was published in the Federal Register (45 FR 30450) stating that the Federal Aviation Administration proposed to alter the Castroville, Tex., transition area. Interested persons were invited to participate in this rule making proceeding by submitting written comments on the proposal to the Federal Aviation Administration. Comments were received without objections. Except for editorial changes this amendment is that proposed in the notice.

The Rule

This amendment to Subpart G of Part 71 of the Federal Aviation Regulations (14 CFR Part 71) alters the Castroville, Tex., transition area. This action provides controlled airspace from 700 feet above the ground for the protection of aircraft executing existing and proposed instrument approach procedures to Castroville Municipal Airport.

Adoption of the Amendment

Accordingly, pursuant to the authority delegated to me by the Administrator, Subpart G of Part 71 of the Federal Aviation Regulations (14 CFR Part 71) as republished (45 FR 445) is amended, effective 0901 G.m.t., July 10, 1980, as follows.

In Subpart G, § 71.181 (45 FR 445), the following transition area is altered to read:

Castroville, Tex.

That airspace extending upward from 700 feet above the surface within a 6.5-mile radius of Castroville Municipal Airport (latitude 29°20'32"N., longitude 98°51'03"W.), within 3.5 miles each side of the 170-degree bearing from the airport extending from the 6.5-mile radius to 11.5 miles south of the airport.

(Sec. 307(a), Federal Aviation Act of 1958 (49 U.S.C. 1348(a); sec. 6(c), Department of Transportation Act (49 U.S.C. 1655(c)))

Note.—The FAA has determined that this document involves a regulation which is not significant under Executive Order 12044, as implemented by DOT Regulatory Policies and Procedures (44 FR 11034; February 26, 1979). Since this regulatory action involves an established body of technical requirements for which frequent and routine amendments are necessary to keep them operationally current and promote safe flight operations, the anticipated impact is so minimal that this action does not warrant preparation of a regulatory evaluation.

Issued in Fort Worth, Tex., on June 12, 1980.

F. E. Whitfield,

Acting Director, Southwest Region.

[FR Doc. 80-19625 Filed 7-2-80; 8:45 am]

BILLING CODE 4910-13-M

---

14 CFR Part 71

[Airspace Docket No. 80-ASW-19]

Designation of Transition Area; Farmerville, La.

AGENCY: Federal Aviation Administration (FAA), DOT.

ACTION: Final rule.

SUMMARY: The nature of the action being taken is to designate a transition area at Farmerville, La. The intended effect of the action is to provide controlled airspace for aircraft executing a new instrument approach procedure to the Farmerville Airport. The circumstance which created the need for the action is the proposed

instrument approach procedure to the Farmerville Airport using the Monroe VORTAC. Coincident with this action, the airport is changed from Visual Flight Rules (VFR) to Instrument Flight Rules (IFR).

EFFECTIVE DATE: September 4, 1980.

FOR FURTHER INFORMATION CONTACT: Kenneth L. Stephenson, Airspace and Procedures Branch (ASW-535), Air Traffic Division, Southwest Region, Federal Aviation Administration, P.O. Box 1689, Fort Worth, Texas 76101; telephone 817-624-4911, extension 302.

SUPPLEMENTARY INFORMATION:

History

On May 8, 1980, a notice of proposed rule making was published in the Federal Register (45 FR 30449) stating that the Federal Aviation Administration proposed to designate the Farmerville, La., transition area. Interested persons were invited to participate in this rule making proceeding by submitting written comments on the proposal to the Federal Aviation Administration. Comments were received without objections. Except for editorial changes this amendment is that proposed in the notice.

The Rule

This amendment to Subpart G of Part 71 of the Federal Aviation Regulations (14 CFR Part 71) designates the Farmerville, La., transition area. This action provides controlled airspace from 700 feet above the ground for the protection of aircraft executing proposed instrument approach procedures to the Farmerville Airport.

Adoption of the Amendment

Accordingly, pursuant to the authority delegated to me by the Administrator, Subpart G of Part 71 of the Federal Aviation Regulations (14 CFR Part 71) as republished (45 FR 445) is amended, effective 0901 G.m.t., September 4, 1980, as follows.

In Subpart G, § 71.181 (45 FR 445), the following transition area is added:

Farmerville, La.

That airspace extending upward from 700 feet above the surface within a 6.5-mile radius of the Farmerville Airport, (latitude 32°43'30" N., longitude 92°20'15" W.).

(Sec. 307(a), Federal Aviation Act of 1958 (49 U.S.C. 1348(a); and sec. 6(c), Department of Transportation Act (49 U.S.C. 1655(c)))

Note.—The FAA has determined that this document involves a regulation which is not significant under Executive Order 12044, as implemented by DOT Regulatory Policies and Procedures (44 FR 11034; February 26, 1979). Since this regulatory action involves an established body of technical requirements for which frequent and routine amendments are necessary to keep them operationally current and promote safe flight operations, the anticipated impact is so minimal that this action does not warrant preparation of a regulatory evaluation.

Issued in Fort Worth, Tex., on June 17, 1980.

F. E. Whitfield,

Acting Director, Southwest Region.

[FR Doc. 80-19620 Filed 7-2-80; 8:45 am]

BILLING CODE 4910-13-M

---

14 CFR Part 71

[Airspace Docket No. 80-SO-09]

Designation of Transition Area, Paducah, Ky. (Farrington Airpark)

AGENCY: Federal Aviation Administration (FAA), DOT.

ACTION: Final rule.

SUMMARY: This rule designates the Paducah, Kentucky, 700-foot transition area. A new public standard instrument approach procedure (VOR/DME-B) has been developed to the Farrington Airpark and additional controlled airspace is required to protect aircraft Instrument Flight Rule (IFR) operations.

EFFECTIVE DATE: 0901 G.m.t., August 1, 1980.

ADDRESS: Federal Aviation Administration, Chief, Air Traffic Division, P.O. Box 20636, Atlanta, Georgia 30320.

FOR FURTHER INFORMATION CONTACT: Alton L. Matthews, Airspace and Procedures Branch, Federal Aviation Administration, P.O. Box 20636, Atlanta, Georgia 30320; telephone 404-763-7646.

SUPPLEMENTARY INFORMATION: A Notice of Proposed Rulemaking was published in the Federal Register on Thursday, April 24, 1980 (45 FR 27773), which proposed: (1) designation of the Paducah, Kentucky (Farrington Airpark), Transition Area, (2) A standard instrument approach procedure, VOR/DME-B, utilizing the Cunningham VORTAC and (3) airport operating status change from VFR to IFR.

In response to the notice, the Air Transport Association of America (ATA) stated an objection if IFR operations at Farrington Airpark would cause derogation of IFR operations at the Barkley Regional Airport.

The FAA review of the ATA statement revealed there would be no significant adverse impact upon IFR operations at Barkley Regional Airport because of the anticipated low volume of IFR activity at Farrington Airpark. Therefore, the Farrington Airpark operating status is hereby changed from VFR to IFR.

Adoption of the Amendment

Accordingly, Subpart G, § 71.181 (45 FR 445) of Part 71 of the Federal Aviation Regulations (14 CFR Part 71) is amended, effective 0901 G.m.t., August 1, 1980, by adding the following:

Paducah, Ky. (Farrington Airpark)

That airspace extending upward from 700 feet above the surface within a 5.5-mile radius of the Farrington Airpark Airport (Latitude 36°58'00" N., Longitude 88°33'54" W.), excluding that portion within the Paducah, Kentucky, Transition Area.

(Sec. 307(a), Federal Aviation Act of 1958, as amended (49 U.S.C. 1348(a)); sec. 6(c), Department of Transportation Act (49 U.S.C. 1655(c)))

Note.—The Federal Aviation Administration has determined that this document involves a proposed regulation which is not significant under Executive Order 12044, as implemented by DOT Regulatory Policies and Procedures (44 FR 11034, February 26, 1979). Since this regulatory action involves an established body of technical requirements for which frequent and routine amendments are necessary to keep them operationally current and promote safe flight operations, the anticipated impact is so minimal that this action does not warrant preparation of a regulatory evaluation.

Issued in East Point, Ga., on June 19, 1980.

Louis J. Cardinali,

Director, Southern Region.

[FR Doc. 80-19627 Filed 7-2-80; 8:45 am]

BILLING CODE 4910-13-M

---

14 CFR Part 71

[Airspace Docket No. 80-AAL-10]

Redesignation of Control Zone; Anchorage, Alaska (Bryant AAF)

AGENCY: Federal Aviation Administration (FAA), DOT.

ACTION: Final rule.

SUMMARY: This amendment will redesignate the Anchorage, Alaska (Bryant AAF) control zone by changing "Bryant AAF" to "Bryant AHP". This change is necessary because the U.S. Army has changed the name of the Fort Richardson, Alaska, airport facility from Bryant Army Airfield to Bryant Army Heliport. This change will not affect controlled airspace volume or boundaries.

EFFECTIVE DATE: 0901 GMT, September 4, 1980.

FOR FURTHER INFORMATION CONTACT: Jerry M. Wylie, Operations, Procedures, and Airspace Branch, Air Traffic Division, Federal Aviation Administration, 701 C Street, Box 14, Anchorage, Alaska 99513, telephone (907) 271-5903.

SUPPLEMENTARY INFORMATION: The purpose of this amendment to § 71.171 of Part 71 of the Federal Aviation Regulations (14 CFR Part 71) is to redesignate the Anchorage, Alaska (Bryant AAF) control zone to Anchorage Alaska (Bryant AHP) control zone. The military aircraft activity at Bryant has changed from primarily fixed wing operations to helicopter operations and although the Ft. Richardson Flying Club continues to operate fixed wing aircraft from this airport, Bryant has been officially redesignated as a heliport. This action will change only the name of the facility on which the control zone is based. No need exists for a change in either the volume or boundaries of the present control zone. Since this amendment will not cause a physical change to controlled airspace nor constraints or impact on the public, I find that notice and public procedure thereon are unnecessary.

Accordingly, pursuant to the authority delegated to me by the Administrator, § 71.171 of Part 71 of the Federal Aviation Regulations (14 CFR Part 71) as republished (45 FR 356) is amended by redesignating the Anchorage, Alaska (Bryant AAF) control zone as follows:

Anchorage, Alaska (Bryant AHP)

Within a 3-mile radius of Bryant AHP (latitude 61°16'N., longitude 149°40'W.), excluding the portion west of longitude 149°43'W. This control zone is effective during the specific dates and times established in advance by a Notice to Airmen. The effective date and time will thereafter be continuously published in the United States Government Flight Information Publication Supplement Alaska.

(Sec. 307(a), Federal Aviation Act of 1958, as amended (49 U.S.C. 1348(a)); sec. 6(c) of the Department of Transportation Act (49 U.S.C. 1655(c)); and 14 CFR 11.69)

Note.—The FAA has determined that this document involves a regulation which is not significant under Executive Order 12044, as implemented by DOT Regulatory Policies and Procedures (44 FR 1134, February 26, 1979). Since this regulatory action involves an established body of technical requirements for which frequent and routine amendments are necessary to keep them operationally current and promote safe flight operations, and anticipated impact is so minimal that this action does not warrant preparation of a regulatory evaluation.

Issued in Anchorage, Alaska, on June 23, 1980.

Robert L. Faith,

Director, Alaska Region.

[FR Doc. 80-19805 Filed 7-2-80; 8:45 am]

BILLING CODE 4910-13-M

14 CFR Part 71

[Airspace Docket No. 80-GL-20]

Designation of Transition Area

AGENCY: Federal Aviation Administration (FAA), DOT.

ACTION: Final action.

SUMMARY: The nature of this federal action is to designate controlled airspace near Maple Lake, Minnesota to accommodate a new instrument approach into Maple Lake Municipal Airport, which was established on the basis of a request from the local Airport officials to provide that facility with instrument approach capability.

EFFECTIVE DATE: September 4, 1980.

FOR FURTHER INFORMATION CONTACT: Doyle W. Hegland, Airspace and Procedures Branch, Air Traffic Division, AGL-530, FAA, Great Lakes Region, 2300 East Devon Avenue, Des Plaines, Illinois 60018, Telephone (312) 694-4500, Extension 456.

SUPPLEMENTARY INFORMATION: The intended effect of this action is to insure segregation of the aircraft using this approach procedure in instrument weather conditions from other aircraft operating under visual conditions. The floor of the controlled airspace in this area will be lowered from 1200' above ground to 700' above ground. The development of the proposed instrument procedures necessitates that the FAA lower the floor of the controlled airspace. The minimum descent altitude for this procedure may be established below the floor of the 700 foot controlled airspace. In addition, aeronautical maps and charts will reflect the area of the instrument procedure which will enable other aircraft to circumnavigate the area in order to comply with applicable visual flight rule requirements.

Discussion of Comments

On page 20905 of the Federal Register dated March 31, 1980, the Federal Aviation Administration published a Notice of Proposed Rule Making which would amend § 71.181 of Part 71 of the Federal Aviation Regulations so as to designate a transition area at Maple Lake, Minnesota. Interested persons were invited to participate in this rulemaking proceeding by submitting written comments on the proposal to the FAA.

No objections were received as a result of the Notice of Proposed Rule Making.

Adoption of Amendment

Accordingly, pursuant to the authority delegated to me by the Administrator, Part 71 of the Federal Aviation Regulations (14 CFR Part 71) is amended, effective September 4, 1980, as follows:

In § 71.181 (45 FR 445) the following transition area is added:

Maple Lake, Minn.

That airspace extending upward from 700 feet above the surface within a 6.5 mile radius of the Maple Lake Municipal Airport, Maple Lake, Minnesota (latitude 45°14'10"N; longitude 93°58'55"W) and within 3.0 miles either side of the 276° bearing from the Minneapolis (MSP) VORTAC (latitude 45°08'45"N; longitude 93°22'23"W) extending from the 6.5 mile radius area out to 7.5 miles east of the airport, excluding that portion which overlaps the Buffalo, Minnesota transition area.

(Sec. 307(a), Federal Aviation Act of 1958 (49 U.S.C. 1348(a)); sec. 6(c), Department of Transportation Act (49 U.S.C. 1655(c)); sec. 11.61 of the Federal Aviation Regulations (14 CFR 11.61)

Note.—The Federal Aviation Administration has determined that this document involves a regulation which is not significant under Executive Order 12044, as implemented by Department of Transportation Regulatory Policies and Procedures (44 FR 11034; February 26, 1979). A copy of the final evaluation prepared for this document is contained in the docket. A copy of it may be obtained by writing to the Federal Aviation Administration, Attention: Rules Docket Clerk (AGL-7), Docket No. 80-GL-20, 2300 East Devon Avenue, Des Plaines, Illinois.

Issued in Des Plaines, Ill., on May 20, 1980.

Wayne J. Barlow,

Director, Great Lakes Region.

[FR Doc. 80-19810 Filed 7-2-80; 8:45 am]

BILLING CODE 4910-13-M

14 CFR Part 75

[Airspace Docket No. 80-NW-5]

Establishment of J-537

AGENCY: Federal Aviation Administration (FAA), DOT.

ACTION: Final rule.

SUMMARY: This amendment designates Jet Route No. J-537 from Rome, Oreg., via Mullan Pass, Idaho, to the U.S./Canadian Border via a direct route to Calgary, Alberta, Canada, and Canadian High Level Airway No. HL537. Air traffic between Calgary and the Los Angeles, Calif., area has increased sufficiently to justify designation of the route as a jet route. This action reduces flight planning and communication time required for the use of the route.

EFFECTIVE DATE: September 4, 1980.

FOR FURTHER INFORMATION CONTACT: L. Jack Overman, Airspace Regulations Branch (AAT-230), Airspace and Air

Traffic Rules Division, Air Traffic Service, Federal Aviation Administration, 800 Independence Avenue, SW., Washington, D.C. 20591; telephone: (202) 426-3715.

SUPPLEMENTARY INFORMATION:

History

On May 8, 1980, the FAA proposed to amend § 75.100 of Part 75 of the Federal Aviation Regulations (14 CFR Part 75) to designate Jet Route No. J-537 from Rome, Oreg., via Mullan Pass, Idaho, to the U.S./Canadian Border (45 FR 30453). Interested persons were invited to participate in the rulemaking proceeding by submitting written comments on the proposal to the FAA. The comments received expressed no objections. This amendment is the same as that proposed in the notice. Section 75.100 of Part 75 was republished in the Federal Register on January 2, 1980, (45 FR 732).

The Rule

This amendment to § 75.100 of Part 75 of the Federal Aviation Regulations (14 CFR Part 75) designates Jet Route No. J-537 from Rome, Oreg., via Mullan Pass, Idaho, to Calgary, Alberta, Canada, excluding the airspace within Canada. Pilot and air traffic controller workload would be reduced by designating this route as a jet route.

Adoption of the Amendment

Accordingly, pursuant to the authority delegated to me by the Administrator, § 75.100 of Part 75 of the Federal Aviation Regulations (14 CFR Part 75) as republished (45 FR 732) is amended, effective 0901 G.m.t., September 4, 1980, as follows:

"Jet Route No. 537 from Rome, Oreg., via Mullan Pass, Idaho; to Calgary, Alberta, Canada; excluding the airspace within Canada." is added.

(Secs. 307(a), 313(a), Federal Aviation Act of 1958 (49 U.S.C. 1348(a) and 1354(a)); sec. 6(c), Department of Transportation Act (49 U.S.C. 1655(c)); and 14 CFR 11.69)

Note.—The FAA has determined that this document involves a regulation which is not significant under Executive Order 12044, as implemented by DOT Regulatory Policies and Procedures (44 FR 11034; February 26, 1979). Since this regulatory action involves an established body of technical requirements for which frequent and routine amendments are necessary to keep them operationally current and promote safe flight operations, the anticipated impact is so minimal that this action does not warrant preparation of a regulatory evaluation.

Issued in Washington, D.C., on June 26, 1980.

B. Keith Potts,

Acting Chief, Airspace and Air Traffic Rules Division.

[FR Doc. 80-19606 Filed 7-2-80; 8:45 am]

BILLING CODE 4910-13-M

32A CFR Ch. VII

44 CFR Ch. IV

Transfer and Redesignation of Regulations

Cross Reference: For a document transferring the regulations contained in 32A CFR Chapter VII to 44 CFR Chapter IV, see the Federal Register of Tuesday, July 1, 1980 (45 FR 44574).

Coast Guard

33 CFR Part 165

[CGD3-80-2-R]

Safety Zone: Lower Hudson River, N.Y.

AGENCY: Coast Guard, DOT.

ACTION: Final rule.

SUMMARY: This amendment to the Coast Guard's Safety Zone regulations establishes a portion of the waters of the Lower Hudson River, New York as a Safety Zone. This Safety Zone is established to protect vessels from a hazard to navigation and possible damage due to the presentation of a fireworks display at the Railroad Yard, Weehawken, New Jersey. No vessel may enter or remain in a Safety Zone without the permission of the Captain of the Port, New York.

EFFECTIVE DATE: This amendment is effective on July 4, 1980.

FOR FURTHER INFORMATION CONTACT: Captain J. L. Fleishell, Captain of the Port, New York, Building 109, Governors Island, New York, New York (212) 668-7917, during normal working hours 8:00 a.m., to 4:30 p.m., Monday through Friday.

SUPPLEMENTARY INFORMATION: This amendment is issued without publication of a notice of proposed rulemaking and this amendment is effective in less than 30 days from the date of publication because of the short time between the scheduling of the event and its occurrance makes such procedures impractical. Extensive local public notice has been given.

DRAFTING INFORMATION: The principal persons involved in drafting this rule are: Lieutenant Junior Grade Ernest L. Del Bueno, Jr., Project Manager, Captain of the Port, New York, New York; and Lieutenant Robert Bruce, Project Attorney, Legal Office, Third Coast Guard District, New York, New York.

In consideration of the foregoing, Part 165 of Title 33 of the Code of Federal Regulations is amended by adding § 165.312 to read as follows:

§ 165.312 Lower Hudson River, New York Harbor, New York.

The waters of the Lower Hudson River within a boundary extending from the southern tip of the pierhead, pier 2 Weehawken, New Jersey (NOAA Chart 12341) east on a course of 090° true approximately 500 yards to a point 39°46'26" N., 74°00'11" W. Thence upriver on a course of031° True approximately 1700 yards to a point 39°47'08" N., 73°59'39" W. Thence west on a course of 270° True to the north tip of a pierhead, pier 13, Weehawken, New Jersey is established as a Safety Zone from 8:30 p.m. E.D.S.T. to 10:15 p.m. E.D.S.T. on July 4, 1980, in the event of rain this Safety Zone will be established from 8:30 p.m. E.D.S.T. to 10:15 p.m. E.D.S.T. on July 5, 1980.

(92 Stat. 1471 (33 U.S.C. 1225 and 1231); 49 CFR 1.46(n)(4))

Dated: June 17, 1980.

J. L. Fleishell,

Captain, U.S. Coast Guard, Captain of the Port, New York.

[FR Doc. 80-19607 Filed 7-2-80; 8:45 am]

BILLING CODE 4910-14-M

---

33 CFR Part 175

[CGD 80-021A]

Equipment Requirements for Boat Operators; Acceptance of Hand Red Flares as Visual Distress Signals

AGENCY: Coast Guard, DOT.

ACTION: Final rule.

SUMMARY: This rule revises the Coast Guard requirements for boat operators to carry visual distress signals. The revision would add Coast Guard approved hand red flares to the list of devices that are acceptable for use on recreational boats. This will provide the boat operator with greater flexibility in satisfying the carriage requirement for visual distress signals and allow this requirement to be met with an inexpensive, yet effective, device. This rule is issued in conjunction with an associated rule (CGD 80-021) changing the approval specification requirements for hand red flare distress signals which appears elsewhere in this issue of the Federal Register.

EFFECTIVE DATE: January 1, 1981.

FOR FURTHER INFORMATION CONTACT: LCDR Harry Schmecht, Office of Boating Safety (G-BLC-3/42), Department of Transportation, U.S. Coast Guard Headquarters, Washington, D.C. 20593, (202) 426-4176.

SUPPLEMENTARY INFORMATION: A notice of proposed rulemaking concerning this amendment was published in the Federal Register of April 3, 1980 (45 FR 22110). Interested persons were invited to submit comments on the proposal until May 19, 1980.

The National Boating Safety Advisory Council has been consulted and its opinions and advice have been considered in the formulation of this amendment. The transcripts of the proceedings of the National Boating Safety Advisory Council at which this amendment was discussed are available for examination in room 4224, U.S. Coast Guard Headquarters, 2100 Second Street, SW., Washington, D.C. The minutes of the meetings are available from the Executive Director, National Boating Safety Advisory Council, c/o Commandant (G-BA/42), U.S. Coast Guard, Washington, D.C. 20593.

Drafting Information

The principal persons involved in drafting this rule are LTJG J. W. Coleman, Project Manager, Officer of Boating Safety, and Mr. Coleman Sachs, Project Attorney, Office of Chief Counsel.

Discussion of Comments

Six comments were received. Five of these were concerned primarily with the addition of the heptane ignition test to the approval specification for hand red flares. These comments are discussed in (CGD 80-021) in this issue of the Federal Register. One comment was from a party opposed to the acceptance of the hand red flare owing to a concern for personal injury and property damage that could result from its use. This consideration was addressed in the Notice of Proposed Rulemaking for the addition of the heptane test (April 3, 1980, 45 FR 22116). In the preamble of the notice, it was stated that despite repeated efforts to solicit specific accident or hazard data, the Coast Guard is not aware of a single incident in which a flare caused a fire, explosion, or other significant harm in actual use. The heptane test was added to reduce the possibility of fires or explosions. The Coast Guard feels that the risk of minor personal injury or property damage posed by hot slag dripping from the flare is not excessive and is outweighed by the benefits the boating public stands to realize through the opportunity to use this inexpensive and effective signalling device. The Coast Guard is therefore adopting its proposal to accept the hand red flare as a visual distress signal for recreational boats.

Evaluation

This final rule has been reviewed and determined to be non-significant under the Department of Transportation's Regulatory Policies and Procedures published on February 26, 1979 (44 FR 1034). A final evaluation has been prepared and may be obtained from the Marine Safety Council (G-CMC/24), Room 2418, Department of Transportation, Coast Guard Headquarters, Washington, D.C. 20593.

In consideration of the foregoing, the Coast Guard amends Part 175 of Title 33 of the Code of Federal Regulations by revising table 175.130 to read as follows:

Table 175.130

Device description		Accepted for use	Number required to be carried
Number marked on device:			
160.021	Hand red flare distress signals	Day and night [1]	3
160.022	Floating orange smoke distress signals	Day only	3
160.024	Pistol-projected parachute red flare distress signals.	Day and night [2]	3
160.036	Hand-held rocket-propelled parachute red flare distress signals.	Day and night	3
160.037	Hand-held orange smoke distress signals	Day only	3
160.057	Floating orange smoke distress signals	Day only	3
160.058	Distress signal for boats, red aerial pyrotechnic flare.	Day and night [3]	3
160.072	Distress signal for boats, orange flag	Day only	1
161.013	Electric distress light for boats	Night only	1

[1] These signals must have a date of manufacture of October 1, 1980 or later to be acceptable.
[2] The signals require use in combination with a suitable launching device approved under 46 CFR 160.028.
[3] These devices may be either self-contained or pistol launched, and either meteor or parachute assisted type. Some of these signals may require use in combination with a suitable launching device approved under 46 CFR 160.026.

(46 U.S.C. 1454 49 CFR 1.46 (n)(1))

Dated: June 25, 1980.

E. A. Delaney,

Captain, Coast Guard, Acting Chief, Office of Boating Safety.

[FR Doc. 80-20078 Filed 7-2-80; 8:45 am]

BILLING CODE 4910-14-M

LIBRARY OF CONGRESS

Copyright Office

37 CFR Part 201

[Docket No. RM 79-4]

Compulsory License for Cable Systems

AGENCY: Library of Congress, Copyright Office.

ACTION: Final regulations.

SUMMARY: This notice is issued to advise the public that the Copyright Office of the Library of Congress is adopting revised regulations regarding section 111 of the Copyright Act of 1976, title 17 U.S.C. That section prescribes various conditions under which cable systems may obtain a compulsory license to retransmit copyrighted works, including conditions for the filing of certain notices and Statements of Account. The new regulations revise certain requirements concerning the filing of Statements of Account.

EFFECTIVE DATE: July 1, 1980.

FOR FURTHER INFORMATION CONTACT: Dorothy Schrader, General Counsel, Copyright Office, Library of Congress, Washington, D.C. 20559 (703) 557-8731.

SUPPLEMENTARY INFORMATION: Section 111(c) of the Copyright Act of 1976 (Act of October 19, 1976, 90 Stat. 2541) establishes a compulsory licensing system under which cable systems may make secondary transmissions of copyrighted works. The compulsory license is subject to various conditions, including requirements that the cable system comply with provisions regarding deposit of Statements of Account under section 111(d)(2).

On June 27, 1978, the Copyright Office published in the Federal Register (43 FR 27827) amendments to its regulations (37 CFR 201.17) governing the form, content, and filing of Statements of Account. Further experience with these regulations led us to propose certain clarifying and technical amendments which were published in the Federal Register (44 FR 73123) on December 17,

1979. Twelve comments were received in response to the Notice of Proposed Rulemaking. After careful consideration of all the comments, we have decided to adopt the proposed regulations with several minor changes. A discussion of the major substantive comments appears below.

1. *Date or dates of receipt.* Comments received from copyright owners and cable system operators supported our proposal to delete from the regulations references to the "date of acceptance by the Copyright Office" and the term "accepted" appearing on the Statement of Account forms. Although the Licensing Division of the Copyright Office reviews the submitted Statements of Account, royalty fee payments, and other related documents and payments for certain obvious errors or omissions, and seeks their correction, it does not examine the documents or payments for all possible errors or omissions. As we stated in the supplementary information accompanying our proposed regulations (44 FR 73124), the elimination of the concept of "acceptance" of submitted documents and fees is intended to clarify

> that nothing on the form as finally placed on record should in any way suggest either that (1) the filing date, with its statutory consequences, has anything to do with the date the Copyright Office examines and finally processes the document; or (2) that the Office has sought to verify the information given and, by placing it on record, has given it some sort of official imprimatur or evidentiary weight.

One comment on behalf of cable system operators, however, criticized the extent of the examination and correction activities now undertaken by the Licensing Division. The comment suggested that our regulations be further amended to make clear that the Copyright Office will not reject filings because of disagreements with cable operators with respect to interpretations of the Act. In addition, the comment suggested that the regulations should specifically recognize the limitations of the Copyright Office insofar as enforcement of its cable regulations.

We have not adopted these suggestions. While elimination of the "acceptance" concept is intended to make clear that the Copyright Office will neither "accept" nor "reject" submitted documents and fees, we believe that we have a statutory obligation to examine the Statements of Account and royalty fee payments for obvious errors and omissions appearing on their face and to require their correction before placing the Statement in the completed record of Statements of Account. However, as we stated in the supplementary information accompanying the proposed regulations (44 FR 73124),

> the regulations will continue to make clear that placing the documents in the completed records of the Copyright Office does not imply any determination that the statutory requirements of section 111 have been met * * *.

One comment submitted on behalf of a data research firm that compiles in automated form the information contained in the Licensing Division's cable records critized the Office for our failure to seek correction of various types of nonobvious discrepancies that they have allegedly found on several Statements of Account. The research firm has generously offered us access to their data base in order to assist in the review of the submitted documents.

Although use of a data base of this kind might be beneficial in identifying certain discrepancies that would not be apparent from the face of the documents, the type of enforcement activity contemplated by the research firm in its comment would be beyond our statutory authority. The principal obligation for enforcement of violations of section 111 rests with the affected copyright owners, not the Copyright Office. In addition, it is uncertain whether the data base would be of value to the Licensing Division because of the difficulty of verifying the information provided therein.

Proposed § 201.17(c)(2) is therefore adopted without change.

2. *Distant signal equivalent values.* Proposed subparagraph (3) of § 201.17(f) is intended to eliminate any doubt concerning instances where a cable system may properly reduce the ordinary distant signal equivalent (DSE) value of a distant television station. Our proposal restricted these instances to the four situations specified in the definition of "distant signal equivalent" in section 111(f) of the Act.

Comments from representatives of the cable television industry were critical of this proposal. Their arguments can be summarized as follows:

> 1. The general principle underlying the cable television compulsory license is that royalty payments are to be based on the *carriage* of distant non-network programming;
>
> 2. The fact that Congress specifically noted four occasions in which the ordinary distant signal equivalent value can be reduced is indicative of a general policy of limiting the royalty payment schedule to the *actual carriage* of distant non-network programming;
>
> 3. Congress limited the exceptions to the four situations specified in the definition of "distant signal equivalent" because those were the only situations contemplated at the time of enactment. There is nothing in the legislative history of the Act to indicate that Congress would have precluded the reduction of the DSE value in other instances had they been considered; and
>
> 4. The statute should be broadly and liberally construed to carry out the policy of Congress of calculating royalty payments based on the actual carriage of distant non-network programming.

We do not agree that Congress in enacting section 111 manifested the intent to limit royalty payments by cable systems to the actual carriage of distant non-network programming. On the contrary, Congress required that all cable systems, including those that carry no distant non-network programming, must pay a minimum copyright royalty fee of $15 per accounting period. 17 U.S.C. 111(d)(2)(C).

We cannot emphasize too strongly that the phrase "distant signal equivalent" is a statutory definition, and one which was created *sui generis* in the Copyright Act. The Copyright Office was not given any authority by Congress to elaborate on this definition. General principles of statutory construction require that clear and unambiguous definitions, and provisos contained in and limiting the operative effect of definitions, shall be given controlling effect. This is especially true where the term or phrase was created by the very statute in which it appears. Thus, if the Copyright Office should attempt to modify this statutory definition, there is no other body of law to which we could look for guidance.

When we turn to the legislative history of this definition, we see that Congress clearly did not intend to establish an open-ended policy of permitting the reduction of DSE values to correspond to actual signal carriage. One of the exceptions and limitations specified in the definition of "distant signal equivalent" calls for the reduction of the DSE of a station where a cable system, at its option, under the rules, regulations, or authorizations of the Federal Communications Commission in effect on *the date of enactment of the Act*, retransmits a live non-network program in place of a substituted program. That Congress considered and specifically rejected a further extension of this provision to similar but distinct situations is apparent from the discussion of the definition in the Report of the Judiciary Committee of the House of Representatives (H.R. REP. NO. 94-1476, 94th cong., 2d Sess. (1976) at 100):

> [W]here the FCC rules on the date of enactment of this legislation permit a cable system, at its discretion, to make such deletions or substitutions or to carry additional programs not transmitted by

primary transmitters within whose local service area the cable system is located [and] * * * the substituted or additional program is a "live" program (e.g., a sports event), then an additional value is assigned to the carriage of the distant signal computed as a fraction of one distant signal equivalent * * *. [*T*]*he discretionary exception is limited to those FCC rules in effect on the date of enactment of this legislation. If subsequent FCC rule amendments or individual authorizations enlarge the discretionary ability of cable systems to delete and substitute programs, such deletions and substitutions would be counted at the full value assigned the particular type of station provided above.* (emphasis added).

Given the legislative policy expressed in this excerpt and the clarity and specificity of the language used in the statutory definition, we see no justification for extending the exceptions and limitations to situations not specified in the section 111(f) definition of distant signal equivalent value.

That Congress *might* have legislated additional exceptions to a full DSE value if cable system operators had argued for additional exceptions cannot be demonstrated now. No support for this argument can be found in the relevant congressional reports. The Copyright Office cannot issue regulations to change a statutory definition based upon mere speculation about congressional reaction to arguments that were never presented to Congress.

General arguments in support of a "broad and liberal" construction of section 111 seem misplaced when it is recognized that this section is itself an exception to the broad principle of the Copyright Act that authors and other owners of copyright have the exclusive right to control public performances of their works. Section 111 establishes a compulsory license. Anyone who wants to obtain the benefits of that compulsory license must satisfy the clear statutory conditions and pay the required royalties. In construing the compulsory license for mechanical reproduction of music under the former copyright law, the courts held that a compulsory license provision, as a derogation of the property rights of copyright owners, should be narrowly construed. *See*, for example, *Duchess Music Corp. v. Stern*, 458 F. 2d 1305 (9th Cir. 1972), and cases cited therein.

In the supplementary information accompanying our proposed regulations (44 FR 73125) we noted five situations where questions have arisen concerning the reduction of the DSE value of a station. The fourth situation raised the question where:

During an accounting period, a signal changes its "type of station" status from a network station or a noncommercial educational station to an independent station (or vice versa).

One comment pointed out that the proposed regulation does not offer any guidance as to whether an affected cable operator should rely on the station's "type value" at the beginning of the period, or at its end; or whether to select the DSE value depending on its status during a majority of the accounting period.

We are not now prepared to issue a regulation that specifies a particular result for this situation. This issue may be considered later as part of a future rulemaking proceeding. For the present, we can only suggest that a prudent approach would be to apply the greater of the two possible "type values" in calculating the royalty fee. This action would assure compliance with the statute. However, the Licensing Division will not question the propriety of submitted Statements of Account where the lower of the two possible "type values" has been used in this particular situation.

Comments submitted on behalf of professional sports proprietors were in support of our proposed regulation. However, they contended that based on the proposal, a signal which is carried on a substituted basis for its sports programming during part of an accounting period, and carried on a regular basis during another part of the accounting period, should have a DSE value greater than the full ordinary DSE value of the station. They contend that the full DSE value for the regular carriage during part of the accounting period and the fractional DSE value based on the substituted programming should be added together.

This result is inconsistent with section 111(f) of the Act. The structure of the "distant signal equivalent" definition in section 111(f) sets forth the general DSE value for particular types of stations and then provides certain exceptions and limitations which can be applied to *reduce* the ordinary DSE value. We do not believe the definition could reasonably and appropriately be interpreted to *increase*, rather than *reduce*, the ordinary full DSE value for a given station's signal. However, where a cable system carries a distant television station on a substitute program basis *and* on a part-time basis in which a reduction in the ordinary DSE value is permitted under the Act, the station's DSE would then be the total of the DSE's thus computed not to exceed the full DSE value for the station's signal.

Proposed § 201.17(f)(3) is therefore adopted without change.

3. *Corrections, supplemental payments, and refunds.* Copyright owners and cable system operators supported our proposal to allow for corrections to Statements of Account, acceptance of supplemental royalty payments and refunds of royalty overpayments. The cable system operators, however, were concerned with some of the limitations and conditions contained in the proposal.

Subparagraph (3)(i) of § 201.17(i) of our proposal required that cable operators *request* refunds "before the expiration of 60 days from the last day of the applicable Statement of Account filing period". This limitation has raised several questions.

One comment noted that most mistakes are discovered by the Licensing Division of the Copyright Office during its examination of the Statements of Account. Since this examination process often extends beyond the 60 day filing period, this limitation, they contend, could preclude the availability of refunds in most cases.

Our proposal, however, is only intended to apply in those situations where the cable operator discovers an error in the statements *independent* from our examination. A *request* for a refund, in this case, must be made "before the expiration of 60 days from the last day of the applicable Statements of Account filing period." Since its inception, the Licensing Division has made refunds to cable operators of royalty overpayments detected during *its examination* of Statements of Account.

We have amended the proposed regulation to make clear that refunds in these cases will continue to be made without regard to any time limitations by adding subdivision (vi) to § 201.17(i).

Other comments contended that our proposal arbitrarily limits the time period for refunds but not for submissions of supplemental payments. They suggest that cable systems should not be obligated to make supplemental payments after a similar time limit. We have not adopted this suggestion.

There is a significant difference between refunds and supplemental payments. In the former case, the compulsory licensee may be considered to have exceeded the compulsory license requirements. Under our regulations, a supplemental payment "shall have only such effect as may be attributed to it by a court of competent jurisdiction", but its submission may be *necessary* to assure compliance with the compulsory license requirements.

Furthermore, it would be beyond our statutory authority to modify the terms of the compulsory license to limit royalty payments to an amount *lower* than that required in section 111(d) of the Act.

Further comments suggested that the "60-day" time limit for refund requests should be extended to 6 months from the end of a filing period or even to the point of distribution by the Copyright Royalty Tribunal.

The supplementary information accompanying our proposed regulations (44 FR 73125) offered several reasons for designating a short and strict time limit on requests for refunds:

> To enable the Copyright Office to fulfill its statutory obligation promptly to transfer royalty payments to the Treasury for investment in interest-bearing securities; to provide detailed accounting to the Copyright Royalty Tribunal; to assure that copyright owner will derive the intended benefits of prompt transfers and investment; and to prevent the Copyright Royalty Tribunal from being hampered in distributing the accumulated fees and interest to copyright owners.

We continue to believe that the statutory obligations addressed in the Notice require us to adhere to this short and strict time limit. It should be noted that the time limit imposed in our corresponding regulation (37 CFR 201.16(g)(3)) for refund requests made in connection with the recordation and certification of coin-operated phonorecord players pursuant to section 116 of the Act is "30 days from the date on which the original certificate was issued by the Copyright Office." Because of the greater complexities involved in preparation and review of cable Statements of Account, we felt it would be appropriate to provide a longer refund request period. We believe that 120 days (the initial 60 day filing period following the expiration of the semiannual accounting period plus the 60 day extension for refund requests) is an adequate period of time to prepare a Statement of Account, review it, and seek a refund if so entitled.

In addition to requests for refunds "before the expiration of 60 days from the last day of the applicable Statement of Account filing period," paragraph (3)(i) of proposed § 201.17(i) provided an alternative date of "April 15, 1980," whichever is later. This alternative date was included to establish a reasonable cut-off date for refund requests relating to Statements filed for the first three accounting periods. One comment suggested that this date be extended to 6 months from the effective date of the final regulations in order to allow for a proper review of the three previous submissions.

We have not adopted this suggestion. Cable royalties collected during the first two accounting periods may be distributed by the Copyright Royalty Tribunal before the expiration of the 6 month period. Cable system operators have already had more than a year to review Statements of Account for calendar 1978. The publication of our Notice on December 17, 1979, alerted cable system operators that we would probably set a time limit on requests for refunds. Finally, since we have changed the cut-off date for refund requests to September 1, 1980, 8 months will have passed between publication of our original Notice and imposition of any time limit. We believe the time limits set in the regulation are ample for adequate review of the Statements of Account.

With respect to the form of the supplemental royalty payment, paragraph (i)(3)(iv)(B) of the proposed regulation requires that the payment be made in the form of a certified check, cashier's check, or money order. This corresponds to the requirement set forth in paragraph (h) of § 201.17 pertaining to the submission of ordinary royalty fee payments.

We have continued to receive complaints from cable operators about this requirement. Paragraph 10 of the supplementary information accompanying our final regulations as issued on June 27, 1978 (43 FR 27829) stated:

> Copyright royalty fees are due on the dates specified in the regulations, and, after deducting administrative costs of the Copyright Office, are to be invested by the Department of the Treasury in "interest-bearing United States securities for later distribution with interest" to copyright owners. Copyright owners are thus entitled to interest earned on royalty fees from the earliest date on which purchase of the securities can be accomplished. In order to assure that none of this interest is lost to copyright owners because of payment by a check drawn on an account with insufficient funds, and also to assure that no administrative costs are incurred in handling bad checks, we are requiring in § 201.17(h) that all copyright royalty fee payments be made by certified check, cashier's check, or money order.

Because of the similar consequences resulting from a supplemental royalty fee payment by a check drawn on an account with insufficient funds, we feel obliged to extend this requirement to these payments as well.

4. *Other issues.* Several comments raised various issues outside the scope of the present rulemaking. Most of these comments suggested modifications in the Statement of Account forms. When the final regulations were first adopted, we stated in the supplementary information (43 FR 958):

> It should be noted at the outset * * * that we are dealing with an entirely new area of copyright law in which all parties concerned lack practical experience. Moreover, future actions by the Copyright Royalty Tribunal and Federal Communications Commission can be expected to affect the theory and application of our rules. Accordingly, these regulations must be considered somewhat experimental and subject to reconsideration as circumstances and experience develop.

Based on their experience reviewing the Statements of Account submitted during the first three accounting periods, copyright owners noted in their comments particular areas where they feel further information and/or clarifications are needed. These areas principally concern the designation of local and distant stations, classification of Canadian and Mexican stations, and problems resulting from filings submitted on behalf of joint "individual" cable systems. In addition, some copyright owners proposed changes that they contend would streamline the royalty calculation steps required on forms CS/SA-2 and CS/SA-3.

Comments on behalf of cable operators, on the other hand, suggested that a good deal of the information required on the Statements of Account for the purpose of assisting copyright owners and the Copyright Royalty Tribunal in the distribution of cable royalties is, in fact, unnecessary. They also advocated a review of our definition of "gross receipts for the 'basic service of providing secondary transmissions of primary broadcast transmitters' " based on recent technological advances and new marketing strategies affecting the types of services now available for a single monthly fee.

We believe that some of these developments do warrant a review of our cable regulations and Statement of Account forms at an appropriate time. We will continue to monitor further developments and will consider additional issues in a separate proceeding.

The proposed regulations as published on December 17, 1979, subject to the changes noted above, are hereby adopted as final. Part 201 of 37 CFR Chapter II, is amended in the manner set forth below.

§ 201.17 Statements of account covering compulsory licenses for secondary transmissions by cable systems. [Amended]

1. By revising § 201.17(c)(2) (as adopted on June 27, 1978) to read as follows:

* * * * *

(c) * * *

(1) * * *

(2) Upon receiving a Statement of Account and royalty fee, the Copyright Office will make an official record of the actual date when such Statement and fee were physically received in the Copyright Office. Thereafter, the Office will examine the Statement and fee for obvious errors or omissions appearing on the face of the documents, and will require that any such obvious errors or omissions be corrected before final processing of the documents is completed. If, as the result of communications between the Copyright Office and the cable system, an additional fee is deposited or changes or additions are made in the Statement of Account, the date that additional deposit or information was actually received in the Office will be added to the official record of the case. However, completion by the Copyright Office of the final processing of a Statement of Account and royalty fee deposit shall establish only the fact of such completion and the date or dates of receipt shown in the official record. It shall in no case be considered a determination that the Statement of Account was, in fact, properly prepared and accurate, that the correct amount of the royalty fee had been deposited, that the statutory time limits for filing had been met, or that any other requirements to qualify for a compulsory license have been satisfied.

* * * * *

2. By adding a new subparagraph (3) to § 201.17(c) to read as follows:

* * * * *

(c) * * *

(3) Statements of Account and royalty fees received before the end of the particular accounting period they purport to cover will not be processed by the Copyright Office. Statements of Account and royalty fees received after the filing deadlines of August 29 or March 1, respectively, will be accepted for whatever legal effect they may have, if any.

* * * * *

3. By adopting, after subparagraph (2) of § 201.17(f) (as adopted on June 27, 1978), a new subparagraph (3) to read as follows:

* * * * *

(f) * * *

(3) In computing the DSE of a primary transmitter in a particular case, the cable system may make no prorated adjustments other than those specified as permissible "exceptions and limitations" in the definition of "distant signal equivalent" in the fifth paragraph of section 111(f) of title 17 of the United States Code, as amended by Pub. L. 94-553. The four prorated adjustments, as prescribed in the fourth and fifth sentences of said definition, are permitted under certain conditions where:

(i) A station is carried pursuant to the late-night programming rules of the Federal Communications Commission;

(ii) A station is carried pursuant to the specialty programming rules of the Federal Communications Commission;

(iii) A station is carried on a part-time basis where full-time carriage is not possible because the cable system lacks the activated channel capacity to retransmit on a full-time basis all signals which it is authorized to carry; and

(iv) A station is carried on a "substitute" basis under rules, regulations, or authorizations of the Federal Communications Commission in effect on October 19, 1976.

4. By Deleting subparagraph (3) of § 201.17(f) (as adopted on June 27, 1978), and by adding a new subparagraph (4), to read as follows:

* * * * *

(f) * * *

(4) In computing a DSE, a cable system may round off to the third decimal point. If a DSE is rounded off in any case in a Statement of Account, it must be rounded off throughout the Statement. Where a cable system has chosen to round off, and the fourth decimal point for a particular DSE value would, without rounding off, have been 1, 2, 3, or 4, the third decimal point remains unchanged; if, in such a case, the fourth decimal point would, without rounding off, be 5, 6, 7, 8, or 9, the third decimal point must be rounded off the next higher number.

* * * * *

5. By adding a new paragraph (i) to § 201.17 to read as follows:

* * * * *

(i) *Corrections, supplemental payments, and refunds.* (1) Upon compliance with the procedures and within the time limits set forth in paragraph (i)(3) of this section, corrections to Statements of Account will be placed on record, supplemental royalty fee payments will be received for deposit, or refunds will be issued, in the following cases:

(i) Where, with respect to the accounting period covered by a Statement of Account, any of the information given in the Statement filed in the Copyright Office is incorrect or incomplete;

(ii) Where, for any reason except that mentioned in paragraph (i)(1)(ii) of this section, calculation of the royalty fee payable for a particular accounting period was incorrect, and the amount deposited in the Copyright Office for that period was either too high or too low; or

(iii) Where, for the semiannual accounting period of January 1, 1978, through June 30, 1978, the total royalty fee deposited was incorrect because the cable operator failed to compute royalties attributable to carriage of late-night, specialty, or part-time programming between January 1, 1978, and February 9, 1978.

(2) Corrections to Statements of Account will not be placed on record, supplemental royalty fee payments will not be received for deposit, and refunds will not be issued, where the information in the Statements of Account, the royalty fee calculations, or the payments were correct as of the date on which the accounting period ended, but changes (for example, addition or deletion of a distant signal) took place later.

(3) Requests that corrections to a Statement of Account be placed on record, that fee payments be accepted, or requests for the issuance of refunds, shall be made only in the cases mentioned in paragraph (i)(1) of this section. Such requests shall be addressed to the Licensing Division of the Copyright Office, and shall meet the following conditions:

(i) The request must be in writing, must clearly identify its purpose, and, in the case of a request for a refund, must be received in the Copyright Office before the expiration of 60 days from the last day of the applicable Statement of Account filing period, as provided for in paragraph (c)(1) of this section, or before September 1, 1980, whichever is later. A request made by telephone or by telegraphic or similar unsigned communication, will be considered to meet this requirement if it clearly identifies the basis of the request, if it is received in the Copyright Office within the required 60-day period, and if a written request meeting all the conditions of this paragraph (i)(3) is also received in the Copyright Office within 14 days after the end of such 60-day period;

(ii) The Statement of Account to which the request pertains must be sufficiently identified in the request (by inclusion of the name of the owner of the cable system, the community or

communities served, and the accounting period in question) so that it can be readily located in the records of the Copyright Office;

(iii) The request must contain a clear statement of the facts on which it is based, in accordance with the following requirements:

(A) In the case of a request filed under paragraph (i)(1)(i) of this section, where the information given in the Statement of Account is incorrect or incomplete, the request must clearly identify the erroneous or incomplete information and provide the correct or additional information;

(B) In the case of a request filed under paragraph (i)(1)(ii) of this section, where the royalty fee was miscalculated and the amount deposited in the Copyright Office was either too high or too low, the request must be accompanied by an affidavit under the official seal of any officer authorized to administer oaths within the United States, or a statement in accordance with section 1746 of title 28 of the United States Code, made and signed in accordance with paragraph (e)(14) of this section. The affidavit or statement shall describe the reasons why the royalty fee was improperly calculated and include a detailed analysis of the proper royalty calculations;

(C) In the case of a request filed under paragraph (i)(1)(iii) of this section, the request shall be identified as "Transitional and Supplemental Royalty Fee Payment" and include a detailed analysis of the proper royalty calculations;

(iv)(A) All requests filed under this paragraph (i) (except those filed under subparagraph (1)(iii) of this paragraph must be accompanied by a filing fee in the amount of $15 for each Statement of Account involved. Payment of this fee may be in the form of a personal or company check, or of a certified check, cashier's check or money order, payable to: Register of Copyrights. No request will be processed until the appropriate filing fees are received.

(B) All requests that a supplemental royalty fee payment be received for deposit under this paragraph (i), must be accompanied by a remittance in the full amount of such fee. Payment of the supplemental royalty fee must be in the form of a certified check, cashier's check, or money order, payable to: Register of Copyrights. No such request will be processed until an acceptable remittance in the full amount of the supplemental royalty fee has been received.

(v) All requests submitted under this paragraph (i) must be signed by the cable system owner named in the Statement of Account, or the duly authorized agent of the owner, in accordance with paragraph (e)(14) of this section.

(vi) A request for a refund is not necessary where the Licensing Division, during its examination of a Statement of Account or related document, discovers an error that has resulted in a royalty overpayment. In this case, the Licensing Division will forward the royalty refund to the cable system owner named in the Statement of Account without regard to the time limitations provided for in paragraph (i)(3)(i) of this section.

(4) Following final processing, all requests submitted under this paragraph (i) will be filed with the original Statement of Account in the records of the Copyright Office. Nothing contained in this paragraph shall be considered to relieve cable systems from their full obligations under title 17 of the United States Code, and the filing of a correction or supplemental payment shall have only such effect as may be attributed to it by a court of competent jurisdiction.

(17 U.S.C. 111, 702, 708)

Dated: June 25, 1980.

David L. Ladd,

Register of Copyrights.

Approved:

Daniel J. Boorstin,

The Librarian of Congress.

[FR Doc. 80-20074 Filed 7-2-80; 8:45 am]

BILLING CODE 1410-03-M

ENVIRONMENTAL PROTECTION AGENCY

40 CFR Part 52

[FRL 1532-1]

Approval of Revisions of the Maryland State Implementation Plan

AGENCY: Environmental Protection Agency.

ACTION: Final rule.

SUMMARY: This notice announces the Administrator's approval, as revisions of the Maryland State Implementation Plan (SIP) of amendments to Maryland Regulations governing control of particulate matter (TSP), sulfur oxides, and hydrocarbon emissions. The specific amendments include changes of regulations designed to control open burning operations, emissions from new incinerators, process emissions, particulate emissions from fuel-burning equipment (Central Maryland, Southern Maryland, and Eastern Shore AQCRs only); and control of sulfur oxides from fuel burning and sources other than fuel-burning equipment. This notice also announces the Administrator's approval as SIP revisions, amendments consisting of various definitions of terms, changes of the State Air Pollution Episode Plans, changes of test methods, and changes of the registration procedures for existing installations. Other changes approved in this notice of final rulemaking include the addition of equivalent metric units to supplement the English System units and deletion of certain outmoded and redundant provisions contained in the current SIP.

EFFECTIVE DATE: August 4, 1980.

ADDRESSES: Copies of the amended Maryland Regulations and associated support and comment material are available for public inspection during normal business hours at the following locations:

U.S. Environmental Protection Agency, Region III, Air Programs Branch, Curtis Building, 6th & Walnut Streets, Philadephia, PA 19106, ATTN: Patricia Sheridan

Bureau of Air Quality and Noise Control, State of Maryland, 201 W. Preston Street, Baltimore, Maryland 21201, ATTN: George P. Ferreri

Public Information Reference Unit, Room 2922—EPA Library, U.S. Environmental Protection Agency, 401 M Street, S.W. (Waterside Mall), Washington, DC 20460.

FOR FURTHER INFORMATION CONTACT: Mr. Harold A. Frankford (3AH12), Air Programs Branch, U.S. Environmental Protection Agency, Region III, 6th & Walnut Streets, Philadelphia, PA 19106: telephone (215/597-8392).

SUPPLEMENTARY INFORMATION:

I. Background

On Feburary 10, 1977, the State of Maryland submitted to the Regional Administrator, EPA Region III, a number of amendments to the State air pollution control regulations. The State requested that these amendments be reviewed and processed as a revision of the Maryland State Implementation Plan (SIP) for attainment and maintenance of national ambient air quality standards.

The amendments consist of changes to State Regulations 10.03.35 through 10.03.41 inclusive (these regulations are currently designated as Regulations 10.18.01 through 10.18.07 inclusive). Many of the changes consist of supplementing English System measurement units currently used in the control regulations with equivalent metric units. The State of Maryland also submitted a number of amendments to the existing regulations which include substantive changes and which are summarized below:

Maryland Regulation Amendments

Regulation and Brief Description

10.03.35.01N (10.18.01.01P)—Definition of *"Fuel Burning Equipment"*—The amended definition excludes certain types of small heating equipment.

10.03.35.01AT (10.18.01.01XX)—Definitions of *"Standard Conditions"*—The amended definition brings the standard conditions for ambient air quality standards and stack testing into equivalence.

10.05.03B (2)d(2)(e)—*Emergency Stage Level for Photochemical Oxidants*—. This amendment changes the level from 0.6PPM to 0.5PPM.

10.03.35.05E—*Installations Not Required to be Registered*—This amendment requires registration information for all equipment greater than the specified minimum sizes.

10.03.35.06A(1), 10.35.35.06A(3)—*Test Methods*—This amendment formally adopts specific stack test methods suggested by EPA, with minor modifications to some equipment specifications.

10.03.35.08—*Penalties and Plan for Compliance*—This section is deleted as it is redundant with language included in the Air Quality Law of Maryland.

10.03.35.12—*Emission Test Methods*—This Section is added in conjunction with the amendments to 10.03.35.06A.

10.03.36–37, 40–41, Table I—*Emission Standards for New Fuel-Burning Equipment*—The amendment changes the grain-loading standard for units of 13–50 mmbtu/hr from .025 gr/dscf to .03 gr/dscf; the dust collecting efficiency requirements are deleted.

10.03.38–39.03B(1)—*Dust Collector Requirements*—Solid fuel burners—an emission standard replaces the dust collection efficiency requirements.

10.03.38–39.03E(2)—*Process Weight Requirement/Equation Table 2*—This process weight requirement and associated equation, and table are deleted. The .03gr/dscf limit still applies

10.03.38–39.04J(2)e(2)—(Vapor Recovery)—The sentences in this section are rearranged with no change in meaning.

10.03.38.06C(1)a—*Prohibition of Certain Incinerators*—The minimum size for new incinerators is increased.

10.03.38–39.07—*Transition from Previous Regulations*—This section is deleted, as the provisions are obsolete.

10.03.38–39, Table I—The amendment changes the grain-loading standard for units of 13–50 mmbtu/hr from 0.25 gr/dscf to .03 gr/dscf; the dust collector efficiency requirements are deleted.

Table II—The process weight table is deleted.

10.03.39.01B, 10.03.39.01B(9), 10.03.39.01D(1)—*Control of Open Fires*—These additions increase the minimum distance requirements of open burning from habitable dwellings.

10.03.39.04C(1)—*Sulfur Compounds from Other than Fuel-Burning Equipment*—The date for determination of an existing source is changed from January 4, 1971 to February 21, 1971.

10.03.39.04D(1)—*Sulfur Oxide Emissions from Fuel-Burning Equipment*—This section is reworded to state that fuels containing sulfur in excess of the applicable sulfur-in-fuel limitations may be used in conjunction with stack gas desulfurization methods, provided that the discharge of sulfur oxides do not exceed those levels that would occur when fuels meeting the applicable sulfur-in-fuel limitations are used.

The State of Maryland submitted proof that a public hearing was held on October 6, 1976 in Baltimore, in acccordance with the requirements set forth in 40 C.F.R. Section 51.4.

On June 28, 1977, 42 Fed. Reg. 32811, the Regional Administrator acknowledged receipt of the amendments, proposed them as revisions of the Maryland SIP, and provided for a 30-day public comment period ending July 28, 1977.

II. Public Comments Received

During the 30-day public comment period, EPA received comments from the District of Columbia Department of Environmental Services (DES). The District of Columbia DES submitted comments in opposition to the elimination of the dust collection efficiency requirements for solid fuel-fired fuel-burning equipment and the relaxation of the total suspended particulates (TSP) emission standards for residual oil-fired fuel-burning equipment located in the Maryland portion of the National Capital Interstate AQCR. EPA's response appears in Section III, item 6 of this notice.

III. Approvability of Proposed Revisions

The above-listed amendments meet the criteria of Section 110(a)(2) of the Clean Air Act and 40 C.F.R. Part 51, Requirements for Preparation, Adoption, and Submittal of Implementation Plans.

Many of the SIP revisions submitted by Maryland are administrative in nature and serve to remove outmoded and redundant regulations or to clarify existing provisions. For instance, metric unit equivalents are added to supplement the English System units. However, six amendments herein approved by EPA as revisions of the Maryland SIP require additional explanation to understand the reasons or the Administrator's approval action:

1. An amendment to Section 10.03.35.03B pertains to air pollution episode criteria. The amendment changes from 0.6 ppm to 0.5 ppm the ambient concentration level at which the emergency episode stage for ozone is declared. This change is consistent with a similar change to Appendix L of 40 C.F.R. Part 51 (40 Fed. Reg. 36333, August 20, 1975).

2. Amendments to Section .03E of Regulations 10.03.38 and 10.03.39 delete the process weight table (Table 2) and associated equations governing control of particulate emissions from sources other than fuel burning equipment. The .03 gr/dscf emission standard will still apply for all sources. The State indicated that this deletion would have a negligible effect on particulate emissions. The .03 gr/dscf emission standard can be measured with a stack testing procedure, while the "pounds-per-hour" emissions standard found in the process weight table is more cumbersome to enforce.

3. An amendment to Regulation 10.03.38.06C(1) refers to prohibition of certain incinerators. The revised Regulation 10.03.38.06C(1)a prohibits construction of any incinerator with a capacity of 5 tons per hour or less and which is used to burn less than 20 tons of refuse per day. This revised regulation would conform with that of Regulation 10.03.39 (Regulations for the Maryland portion of the National Capital Interstate ACQR). The State expects no change in TSP emissions as a result of these amendments. In addition, the current provisions of Regulations 10.03.35.11 (Permits) requires new incinerators with a rated capacity of 2000 pounds (one ton) per hour or more to have both a permit to construct and a permit to operate. The provisions of Regulation 10.03.35.11 meet the requirements of 40 CFR Section 51.18 (Review of New Sources and Modifications). Thus, the State has adequately demonstrated that new source review procedures currently in effect are such as to enable an assessment of the impact of those incinerators in nonattainment areas.

4. Section 10.03.39.04C(1) controls sulfur dioxide emissions from sources other than fuel-burning equipment in the Maryland portion of the National Capital Interstate AQCR. The amendment changes the date for determining the definition of "existing source" from an installation constructed

before January 4, 1971 to an installation constructed before February 21, 1971. The purpose of the date change is to conform with the effective date of Maryland Regulation 10.03.38.

According to the current SIP approved regulation, an "existing source" is allowed to emit up to 2000 ppm SO_2, while a "new source" is allowed to emit up to 500 ppm SO_2. While it is conceivable that the date change could allow a "new source" built between January 4, 1971 and February 21, 1971 to be considered an "existing source" and therefore be allowed to increase its SO_2 emissions, the State had indicated that to the best of its knowledge, no source would be affected by the date change. Based on the State's information, this regulation is approvable.

5. Section 10.03.39.04D refers to exceptions from the regulations controlling sulfur oxide emissions. This section is reworded to state that fuels containing sulfur in excess of the applicable sulfur-in-fuel limitations may be used in conjunction with stack gas desulfurization methods, provided that the discharge of sulfur oxides does not exceed those levels that would occur if fuels meeting the applicable sulfur-in-fuel limitations were to be burned. The State explained that the reason for the change was to make the language of Regulation 10.03.39.04D(1) conform with that of Regulation 10.03.38.04D(1). The State has also indicated that there are no sources at the current time which would be subject to this regulation.

6. Table 1 of Regulations 10.03.36 through 10.03.41 is amended to remove the dust collection efficiency requirements for all fuel-burning equipment and change the grain loading standard, from 0.025 gr/dscf to 0.03 gr/dscf, for residual oil-fired fuel-burning equipment with a heat input of between 13 mmbtu/hr and 50 mmbtu/hr. The State supported this amendment with the following arguments: (1) The change in grain-loading cannot be measured by available stack test procedures; (2) the grain-loading standards are considered to be the enforceable standard while the dust collection efficiency requirement was considered an equipment design standard. Therefore, Maryland expects no increase in TSP emission as a result of the deletion of the dust collection efficiency requirements; and (3) while certain sources could theoretically increase TSP emissions as a result of the change from 0.025 gr/dscf to 0.030 gr/dscf, the State has no evidence that such sources have increased their emissions. EPA considers this response to be adequate in addressing the concerns raised by the District of Columbia DES.

In view of the above arguments, EPA believes that the amendments in Table 1 will not adversely affect TSP levels in those AQCR's which are currently designated as attainment or unclassified areas and will not exacerbate TSP violations in those AQCR's currently designated as nonattainment areas. Therefore, EPA approves these amendments as a revision of the Maryland SIP.

IV. Conclusion

In view of the above evaluation, the Administrator approves these amendments to Maryland Regulations 10.03.35 through 10.03.41, effective 30 days after publication of this notice. Accordingly, 40 C.F.R. Section 52.1070 (Identification of Plan) of Subpart V (Maryland) is revised to incorporate these amendments into the approved Maryland SIP.

Under Executive Order 12044, EPA is required to judge whether a regulation is "significant" and therefore subject to the procedural requirements of the Order or whether it may follow other specialized development procedures. EPA labels these other regulations "specialized." I have reviewed this regulation and determined that it is a specialized regulation not subject to the procedural requirements of Executive Order 12044.

(42 U.S.C. 7401–642)

Dated: June 27, 1980.

Douglas M. Costle,

Administrator.

Part 52 of Title 40, Code of Federal Regulations is revised to read as follows:

Subpart V—Maryland

1. In Section 52.1070, Subsection (c) is revised by adding paragraph (c)(23) and (c)(24) to read as follows:

§ 52.1070 Identification of plan.

* * * * *

(c) The plan revisions listed below were submitted on the dates specified * * *

(23) Amendments to Sections .01 (Definitions), .03 (Air Pollution Episode System), .06 (Test Methods) and .12 (Emission Test Methods); and deletion of Section .08 (Penalties and Plans for Compliance) of Regulation 10.03.35 (Regulations Governing Air Pollution Control in the State of Maryland); amendments to Table 1 (Emission Standards for New Fuel Burning Equipment) of Maryland Regulations 10.03.36 through 10.03.41; amendments to Section .04 (Control and Prohibition of Gas and Vapor Emissions) and .06 (Control and Prohibition of Installations and Operations; and deletion of Section. .03E (Process Weight Requirements) and .07 (Transition from Previous Regulations) of Maryland Regulation 10.03.38 (Regulation Governing Air Pollution Control in the Metropolitan Baltimore AQCR); amendments to Section .01 (Control of Open Fires) and .04 (Control of Gas and Vapor Emissions; and deletion of Sections .03E (Process Weight Requirements) and .07 (Transition from Previous Regulations) of Maryland Regulation 10.03.39 (Regulation Governing Air Pollution Control in the Maryland Portion of the National Capital Interstate AQCR) submitted on February 10, 1977 by the Governor.

(24) Amendments to Maryland Regulation 10.03.35 through 10.03.41 inclusive which supplement the English System measurement with equivalent metric units submitted on February 10, 1977 by the Governor.

[FR Doc. 80-20019 Filed 7-2-80; 8:45 am]

BILLING CODE 6560-01-M

---

40 CFR Part 65

[FRL 1531-4]

Disapproval of a Delayed Compliance Order Issued by the Pennsylvania Department of Environmental Resources to the Bethlehem Steel Corp; Correction

AGENCY: Environmental Protection Agency.

ACTION: Correction to final rule.

SUMMARY: On October 2, 1979, the Administrator of EPA disapproved a delayed compliance order issued by the Pennsylvania Department of Environmental Resources to the Bethlehem Steel Corporation with respect to four blast furnaces at its Bethlehem, Pennsylvania plant. Notice of this disapproval appeared at 44 FR No. 192, page 56696. Due to an oversight, that Notice contained an error. Today's Notice contains a correction of that error.

DATE: This rule is effective July 3, 1980.

FOR FURTHER INFORMATION CONTACT: Richard Watman, U.S. EPA—Region III, Curtis Building, Sixth & Walnut Streets, Philadelphia, Pennsylvania 19106, (215) 597–0913.

Authority: 42 U.S.C. §§ 7413(d), 7601.

Dated: June 18, 1980.

Jack Schramm,

Regional Administrator.

The amendment to 40 CFR Part 65 appearing at 44 FR 56698, October 2, 1979, third column, is corrected as follows:

1. The section reference appearing in amendment Item No. 1 is changed from "§ 65.632" to "§ 65.432".

2. The section designation appearing in the section heading is changed from "§ 65.532" to "§ 65.432".

As corrected, the amendment reads as follows:

PART 65—DELAYED COMPLIANCE ORDERS

§ 65.432 EPA disapproval of State delayed compliance orders.

Source	Location	Order No.	Date of FR proposal	SIP regulation involved	Final compliance date
*	*	*	*	*	*
Bethlehem Steel Corp.; Bethlehem plant.	Bethlehem, PA	None	7/30/79	25 PA Code §§ 123.1, 123.41.	None.
*	*	*	*	*	*

[FR Doc. 80-20103 Filed 7-2-80; 8:45 am]

BILLING CODE 6560-01-M

DEPARTMENT OF TRANSPORTATION

Coast Guard

46 CFR Part 160

[CGD 80-021]

Distress Signals; Heptane Ignition Test for Hand Red Flares

AGENCY: Coast Guard, DOT.

ACTION: Final rules.

SUMMARY: This action amends the Coast Guard approval specification for hand red flare distress signals. The amendments eliminate the reference to merchant vessels in the subpart heading for this specification and add the requirement for a heptane ignition test that is intended to measure the tendency of the flares to start a fire on a boat. This will allow the hand red flare to be accepted for use on recreational boats. This rulemaking is issued in conjunction with a rulemaking that changes the equipment requirements for boats (CGD 80-021a)) which appears elsewhere in this issue of the Federal Register.

EFFECTIVE DATE: These amendments become effective on October 1, 1980.

FOR FURTHER INFORMATION CONTACT: Mr. Robert Markle, Office of Merchant Marine Safety (G-MMT-3/12), Department of Transportation, U.S. Coast Guard Headquarters, Washington, D.C. 20593, (202) 426-1444.

SUPPLEMENTARY INFORMATION: On April 3, 1980, the Coast Guard published a notice of proposed rulemaking in the Federal Register (45 FR 22116) that proposed the addition of a heptane ignition test to the Coast Guard approval specification for hand red flares found in 46 CFR 160.021. Six parties commented on the proposal before the comment period closed on May 19, 1980. Commenters included private individuals, a commercial enterprise, an industry association, and a State boating administrator. These comments are discussed in greater detail in subsequent paragraphs.

The National Boating Safety Advisory Council has been consulted and its opinions and advice have been considered in the formulation of this amendment. The transcripts of the proceedings of the National Boating Safety Advisory Council at which this amendment was discussed are available for examination in room 4224, U.S. Coast Guard Headquarters, 2100 Second St., SW., Washington, D.C. The minutes of the meetings are available from the Executive Director, National Boating Safety Advisory Council, c/o Commandant (G-BA/42).

Summary of Final Evaluation

A Final Evalution has been prepared for these regulations in accordance with the Department of Transportation's Regulatory Policies and Procedures published in the Federal Register on February 26, 1979 (44 FR 11034). That document requires that the evaluation quantify, to the maximum extent practicable, the estimated cost of the regulations to the private sector, consumers, and Federal, State and local governments, as well as the anticipated benefits and impact of the regulations.

This rulemaking is expected to result in an initial cost of about $40,000 and a recurring annual cost of about $1,000. These costs will be imposed directly on the private sector (the manufacturers of the flares). The manufacturers are expected to pass the costs through to the ultimate consumers of the flares in the form of price increases; however, because of the large numbers of flares that are expected to be produced, the price increase for an individual flare will be negligible. There is no effect on Federal, State, and local governments except in their capacities as consumers of the flares. The primary benefit identified for the proposal is the increased safety for users of hand red flares.

The Final Evaluation has been included in the public docket for this rulemaking, and may be obtained from the Marine Safety Council (G-CMC/24), Coast Guard Headquarters, 2100 Second St., SW., Washington, D.C. 20593, (202) 426-1477.

Drafting Information

The principal persons involved in drafting these regulations are: Mr. Robert Markle, Office of Merchant Marine Safety, and Mr. Coleman Sachs, Office of the Chief Counsel.

Discussion of Comments on the Proposed Regulations

Four of the comments favored the addition of the heptane test, although three of them qualified their support with suggested changes or additions.

The fifth commenter suggested a modification to the test without specifically expressing support for its adoption. The issues raised by these commenters are addressed in subsequent paragraphs. The last commenter felt that the Coast Guard did not extablish in the proposed rulemaking that a sufficient hazard exists to justify addition of the heptane test. The Coast Guard does not agree with this commenter. As discussed in the notice of proposed rulemaking, not a single real world incident has been brought to our attention in which the use of a hand flare caused a fire or explosion, or other significant harm. Despite this, the Coast Guard feels that, since most recreational boats use gasoline for fuel, a potential risk exists that justifies the minimal cost of the tests.

One commenter expressed the opinion that the underwater conditioning requirement in § 160.021-4(c)(2) should be changed as a consequence of the addition of the heptane ignition test. The suggestion was to change from 5 minutes to 30 seconds the period in which the flare is immersed with its protective cap removed to test the water proofing of its igniter button. The commenter stated that the changes required to make the flare pass the heptane test would prevent it from passing the 5 minute immersion test for

the igniter button. The Coast Guard disagrees. The purpose of this requirement is to make sure that the signal is not disabled when it is ready to fire, should it be dropped onto a wet surface, drenched by a breaking wave, or soaked in a rainstorm. A flare that could pass a 30 second immersion, but not a 5 minute immersion, would have to be considered marginally waterproof. Furthermore, the Coast Guard is aware of at least one flare that can pass both the heptane ignation test and the 5 minute immersion test. Consequently, meeting both requirements would not appear to be impossible.

One commenter suggested that the Coast Guard permit the manufacture and distribution of flares capable of passing the heptane test which are produced before this regulation becomes effective on October 1, 1980. The commenter's concern was apparently prompted by the proposal in the companion project (CGD 80-021a) that would limit boaters to using hand flares manufactured after October 1, 1980. The Coast Guard will permit conforming hand flares produced before October 1, 1980 to be marked with an October 1980 date of manufacture; however, the date of expiration would have to be within the normal 42 months from the actual date of manufacture. This will assure that manufacturers that comply with the regulations at an early date are not penalized, and that flares will still expire at the time that they normally should.

The commenter also expressed the opinion that manufacturers that are unable to comply with the heptane ignition test before October 1, 1980 should not be excluded from their existing merchant vessel market because of a requirement aimed primarily at the recreational boater. As discussed in the notice of proposed rulemaking, the Coast Guard is equally concerned with the hazards posed by the use of hand flares on merchant vessels. It is noted, however, that the existing manufacturers of approved hand flares are for the most part small businesses. The Coast Guard recognizes that it may be difficult for these concerns to make the necessary investment to develop the needed changes before the October 1, 1980 effective date. Consequently, the Coast Guard will permit these manufacturers to continue production of their existing flares until October 1, 1982, provided these devices are marked "Not Approved for Use on Recreational Boats." This additional time will permit these manufacturers to explore appropriate ways of meeting the heptane ignition test without eliminating them from the merchant vessel market they have served in previous years. The Coast Guard will not accept any applications for approval of new hand flares that do not pass the heptane ignition test.

One commenter suggested that the hot slag problem could be eliminated if only high intensity flares or flares that have a metallic base composition were approved. The commenter stated that the 500 candela low technology flare that is now approved by the Coast Guard will produce molten dripping slag by the nature of its combustion process, and that slag is not produced by flares of the type suggested. The commenter also stated that the long term reliability of flares of the suggested type is better. The Coast Guard recognizes that it may be easier to make high intensity flares burn without hot dripping slag, but these flares may also include combustible components that can be ejected as burning particles. This was demonstrated during the test series conducted by the National Bureau of Standards in the formulation of this rule that was described in the notice of proposed rulemaking. The Coast Guard feels it is appropriate to retain the performance requirement as proposed, thereby enabling manufacturers to eliminate hot slag without the Coast Guard dictating the method of its elimination. The Coast Guard does not consider the long term reliability advantage claimed by the commenter to be significant. All pyrotechnics deteriorate with time, but in the evaluations conducted by the Coast Guard in advance of its proposal to require visual distress signals on boats, a number of outdated pyrotechnics were used. Although their performance capabilities were reduced, they were generally observed to function well.

One comment suggested a change in the way the heptane test is to be conducted. As proposed, the test would require a quantity of heptane to be added to a pan containing 12 mm (½ in.) of water. The suggested change would have required the heptane to be placed directly upon the bottom of the pan without water or for no more than ⅛ in. of water to be used. The object of the change would be to prevent quenching of the hot slag in the water, thereby allowing enough heat to build up within an accumulation of slag to start the heptane burning. The Coast Guard is unwilling to adopt the suggested change. The water in the pan serves several important functions. If it were not present, the heptane may be ignited from the build-up of heat in a pile of slag that forms directly under the flare. As flares are not held in a fixed position in actual use, the accumulation of slag is unlikely to occur. It should therefore be eliminated as factor that may result in certain flares failing the test. A similar accumulation of slag was one of the reasons that the Coast Guard abandoned a newspaper ignition test for hot slag that had been proposed earlier. In addition the water provides a level surface over which the heptane spreads out in a uniform film. This would not occur on the bottom surface of the pan alone unless that surface were exceptionally level. Exposure to fire can easily distort the pan, requiring its frequent replacement if the commenter's suggestion were adopted. Furthermore, the water provides a source of cooling for the pan in the case of a fire. This cooling limits the amount of distortion that the pan will suffer in a fire.

Another commenter expressed the opinion that hand flares were unsafe, and should be subjected to a test over gasoline spilled on an open deck, and to another test over paper on an open deck, both in addition to the heptane ignition test. The Coast Guard disagrees with the commenter. As the gasoline which is commercially available contains a number of additives, it lacks sufficient uniformity to be used as a test fuel. Heptane, which is one of the components of gasoline, is used as a standard test fuel to represent gasoline. The spilling of gasoline on an open deck does not create uniform test conditions that could be easily reproduced. This objective is achieved by using a film of heptane over water. In addition, a test over gasoline spilled on an open deck would present the same test problems as discussed in the preceding paragraph for the heptane test without water. As discussed in the notice of proposed rulemaking the use of paper as a test medium was abandoned because it does not represent any material or hazardous condition likely to be encountered in the marine environment. The Coast Guard believes that the inadequacies of the paper test render it invalid, and it is not aware of any other solid surface that can provide a fair and uniform test.

One commenter suggested that the heptane test procedure should include a warning for the operator to stand clear of the heptane pan while igniting the flare and while the flare is burning. The reason for the suggestion is that although heptane will not explode in that unconfined test configuration, it can burst into flame very rapidly, exposing the unwary to serious burns. Although the Coast Guard feels that the laboratories and manufacturers that

would be conducting these tests would be well aware of the dangers associated with flammable and explosive materials, the warning could possibly alert someone to a danger that had not been adequately considered. Accordingly, the suggested warning has been added to the test procedure in the form of a cautionary note.

In consideration of the foregoing, Part 160 of Title 46 of the Code of Federal Regulations is amended as set forth below.

1. By revising the heading of Subpart 160.021 to read as follows:

Subpart 160.021—Hand Red Flare Distress Signals

2. By adding a new paragraph (d)(8) to § 160.021–4 to read as follows:

§ 160.021–4 Approval and production tests.

* * * * *

(d) *Technical tests.* * * *

(8) *Heptane ignition.* (i) A metal pan must be used to hold a layer of water at least 12mm (½ in.) deep with a layer of technical grade heptane on top of the water. The pan must be at least 1 m (39 in.) square with sides extending between 175mm (7 in.) and 200 mm (8 in.) above the surface of the water. The amount of heptane used to form the layer must be 2.0 liters per square meter of pan area (6.25 fluid ounces per square foot).

(ii) The test must be conducted in a draft-free location. The ambient temperature, the temperature of the water, and the temperature of the heptane must all be between 20° C (68° F) and 25° C (77° F) at the time of the test.

(iii) The signal under test must be held with the flame end pointing upward at an angle of approximately 45°, 1.2 m (4 ft.) directly above the center of the pan. The signal must be ignited as soon as the heptane is observed to spread out over the water in continuous layer. The signal must be allowed to burn completely, and must remain in position until it has cooled.

(iv) the heptane must not be ignited by the flare or by material from the flare.

Caution: Heptane ignites rapidly and burns vigorously. The flare should be remotely ignited and all personnel should stay clear of the test pan while the flare is burning and while any part of it remains hot.

(46 U.S.C. 481, 49 U.S.C. 1655(b)(1), 49 CFR 1.46(b))

Dated: June 26, 1980.

Henry H. Bell,

Rear Admiral, U.S. Coast Guard, Chief, Office of Merchant Marine Safety.

[FR Doc. 80-20080 Filed 7-2-80; 8:45 am]

BILLING CODE 4910-14-M

FEDERAL MARITIME COMMISSION

46 CFR Part 502

[General Order 16; Amdt. 36]

Rules of Practice and Procedure; Copy Requirements

AGENCY: Federal Maritime Commission.

ACTION: Final rule.

SUMMARY: The rules of practice and procedure are amended to reduce the requirements for copies of certain filings in formal proceedings from an original and fifteen to an original and four, to clarify other copy requirements, and to incorporate all such requirements into a single rule. These changes eliminate unnecessary copies and clarify filing procedures.

EFFECTIVE DATE: July 3, 1980.

FOR FURTHER INFORMATION CONTACT: Francis C. Hurney, Secretary, Federal Maritime Commission, 1100 L Street, NW., Washington, D.C. 20573, (202) 523-5725.

SUPPLEMENTARY INFORMATION: The Commission's rules of practice and procedure currently generally require that an original and fifteen copies of all pleadings in formal proceedings be submitted for use of the Commission (46 CFR 502.118). Experience shows that for many submissions this requirement is excessive. In particular, on matters which are pending before an Administrative Law Judge the usual motion, request for ruling, prehearing statement, stipulation or similar filing is disposed of by the Administrative Law Judge without recourse to the full Commission. On such matters the full fifteen copies submitted are seldom put to use. By virtue of the amendment adopted here, the copy requirement for such submissions will be reduced to an original and four. The original and fifteen copy requirement still will apply to submissions which it is contemplated the full Commission will consider or decide.

Other aspects of the current copy requirements are often misunderstood or overlooked by practitioners. This is especially true in the area of discovery materials and prepared testimony. By virtue of this amendment additional clarifications are made and all copy requirements are incorporated into a single section. It is hoped that this will eliminate the current confusion.

Therefore, pursuant to 5 U.S.C. 553 and section 43 of the Shipping Act, 1916 (46 U.S.C. 841(a)) the following amendments to 46 CFR Part 502 are adopted.

1. Section 502.118 is revised to read as follows:

§ 502.118 Copies of documents for use of the Commission.

(a) Except as otherwise provided in the rules in this part, the original and fifteen (15) copies of every document filed and served in proceedings before the Commission shall be furnished for the Commission's use. If a certificate of service accompanied the original document, a copy of such certificate shall be attached to each such copy of the document.

(b) In matters pending before an Administrative Law Judge the following copy requirements apply.

(1) An original and fifteen copies shall be filed with the Secretary of:

(i) Appeals and replies thereto filed pursuant to § 502.153.

(ii) Memoranda submitted under shortened procedures of Subpart K of this part.

(iii) Briefs submitted pursuant to § 502.221.

(iv) All motions, replies and other filings for which a request is made of the Administrative Law Judge for certification to the Commission or on which it otherwise appears it will be necessary for the Commission to rule.

(2) An original and four copies shall be filed with the Secretary of prehearing statements required by § 502.95, stipulations under § 502.162, all other motions, petitions, or other written communications seeking a ruling from the presiding Administrative Law Judge.

(3) (i) A single copy shall be filed with the Secretary of requests for discovery, answers, or objections exchanged among the parties under procedures of subpart L of this part. Such materials will not be part of the record for decision unless admitted by the Presiding Officer or Commission.

(ii) Motions filed pursuant to § 502.210 are governed by the requirements of paragraph (b)(2) of this section and motions filed pursuant to § 502.211 are governed by the requirements of paragraph (b)(1)(iv) of this section.

(4) One copy of each exhibit shall be furnished to the official reporter, to each of the parties present at the hearing and to the Presiding Officer unless he directs otherwise. If submitted other than at a hearing, the "reporter's" copy of an exhibit shall be furnished to the Administrative Law Judge for later

inclusion in the record if and when admitted.

(5) Copies of prepared testimony submitted pursuant to §§ 502.67(d) and 502.157 are governed by the requirements for exhibits in paragraph (b)(4) of this section.

§ 502.159 [Revoked]

2. Section 502.159 is revoked.

3. Section 502.201(a) is revised to read as follows:

§ 502.201 General.

(a) *Applicability.* The procedures described in this subpart are to be available in all proceedings under section 22 of the Shipping Act, 1916 and are governed by the copy requirements of § 502.118.

* * * * *

By the Commission June 25, 1980.

Francis C. Hurney,

Secretary.

[FR Doc. 80-19894 Filed 7-2-80; 8:45 am]

BILLING CODE 6730-01-M

DEPARTMENT OF TRANSPORTATION

Office of the Secretary

49 CFR Part 23

Guidance for Implementing Department of Transportation Rules Creating a Minority Business Enterprise Program in DOT Financial Assistance Programs

AGENCY: Office of the Secretary, Department of Transportation.

ACTION: Notice of Policy.

SUMMARY: On March 31, the Department of Transportation (DOT) published a final rule creating a minority business enterprise (MBE) program for DOT financial assistance programs. The rule requires, among other things, that certain recipients of DOT assistance have MBE programs in effect by August 1 in order to continue receiving grant and project approvals. The Department is publishing this notice in order to assist recipients in drafting these programs and to answer questions that recipients and other members of the public have asked about the regulation.

FOR FURTHER INFORMATION CONTACT: Carl T. Horton, Special Assistant to the Secretary of Transportation, 400 7th Street, SW., Washington, D.C. 20590 (202) 426-8553.

SUPPLEMENTARY INFORMATION:

Background

Purpose

The Department's MBE regulation (49 CFR Part 23; 45 FR 21172, March 31, 1980) requires many recipients of DOT financial assistance to devise MBE programs in order to increase MBE participation in DOT-assisted activities. In order to continue receiving grant and project approvals after August 1, 1980, these recipients must have an MBE program approved by DOT and in effect. Recipients and other members of the public have raised a number of questions about the Department's policy concerning the content of MBE programs, the Department's process for reviewing and evaluating the programs, and the Department's interpretation of various provisions of the regulation. This document is intended to answer these questions and to provide guidance to recipients as they draft their MBE programs.

Contents

MBE Program Submission and Review

Recipients with Existing Programs
Delays in Submission and Review of MBE Programs
Transit Vehicle Manufacturer Requirement

Relationship of Primary Recipients and Subrecipients Requirements Concerning Lessees Coverage of the Regulation the MBE Program (Sections 23.45 and 23.49)

MBE Policy Statement (section 23.45(a)) and/or (section 23.43(a))
MBE Liaison Officer (section 23.45(b))
Affirmative Action Techniques to Ensure MBE
Participation (section 23.45(c))
Minority and Female Owned Banks (section 23.45(d))
MBE Directory (section 23.45(e))
MBE Eligibility (section 23.45(f))
Goals for MBEs (section 23.45(g))
Identification of MBEs by Competitors (section 23.45(h))
Operation of Award Selection Procedures
Consistency with State Law of Award Selection Procedure
MBE Compliance by Contractors and Subrecipients (section 23.45(j))
MBE Set-Asides (section 23.45(k))

Exemptions

Lead Agency Concept

Certification Appeals (Section 23.55)

Attachment A—Applicant and Recipient Requirement Chart

MBE Program Submission and Review

Recipients with Existing Programs

Applicants and recipients who have developed an MBE program approved by a DOT element under previous requirements must revise those programs to conform to the requirements of the regulation within the 90-day "grace period" prescribed in § 23.41(b) of the regulation. An MBE program, once submitted and approved by a DOT element, need not be resubmitted but will apply continuously to all DOT elements until amended.

Delays in Submission and Review of MBE Programs

Under the terms of the regulation, a recipient that has not submitted an MBE program and had that program approved by DOT by August 1 is technically in noncompliance. We recognize, however, that three situations may occur that could cause delays in the approval of the programs submitted this year. First, because of administrative delays within the recipient organizations, some recipients may not submit programs before August 1. Second, the recipient may submit the program before August 1, but the DOT administration involved may not have completed its review of the program by August 1. Third, the DOT operating administration involved may have identified deficiencies in the program, but corrective action may not have been taken by August 1 so that approval is possible.

The Department believes that it is very important for recipients to submit their programs on time. However, there may be some cases in which, despite diligence and maximum effort, certain recipients find it impossible to submit plans before August 1. In order not to penalize such recipients, the Department will consider requests for extensions of time to submit plans. In order for an extension to be granted, the requests will have to demonstrate that there is an intractable problem preventing timely submission of a plan. While we sympathize with organizations having heavy workloads, it is unlikely that workload alone will justify extensions. Extensions will be granted in meritorious cases for a reasonable time during which maximum effort can be expected to result in the submission of a program. Whenever available, drafts of programs should be submitted to the Department with extension requests.

When the recipient submits a program to the Department, that program must be in effect. Solicitations made after the date the program is adopted by the recipient and submitted to the Department should contain all clauses, goals, and other material required by the program. Contracts for which solicitations are issued before adoption of the program by the recipient are not required to contain this material, even though the contracts are awarded after the adoption of the program. The Department believes that it would be

unwieldly to require new or amended solicitations in these cases.

When the Department receives a program from a recipient by August 1, it intends to approve or disapprove the programs by September 15. Programs received after August 1 are intended to be processd in approximately the same length of time. In the interim between submission and approval, recipients are considered to be in compliance with the regulation, insofar as the MBE program requirement is concerned, so long as their programs are in effect and being implemented.

The Department's review of programs it receives will have two stages. Within 5–10 days of receiving a program, the Department will conduct a preliminary review to ascertain whether there are any major omissions. Major omissions would include the absence of any of the required program elements set forth in § 23.45 of the rule that apply to the recipient.

If there are major omissions (or if no program is received), the operating administration will send a letter to the recipient informing it of the problem and requesting expeditious correction.

With respect to programs that do not have major omissions, or in which major omissions have been corrected, the Department will make a more thorough examination of the contents of the program. The Department may approve a program as it stands, approve it with comments or instructions to correct minor problems in the next annual update, or indicate that the plan has serious deficiencies that require correction if the plan is to be approved. In the latter case, the operating administration concerned will send a letter to the recipient instructing the recipient to correct the problems within a given period of time.

If a program is not received, if major omissions are not corrected, or if the recipient does not correct serious deficiencies in the program in a timely manner, the program (if submitted) will be disapproved with and the recipient will be regarded as being in noncompliance with the regulation. It will then be subject to enforcement action and sanctions as provided in §§ 23.81–85 of the regulation.

So long as a recipient has a program in effect, and it has not been found in noncompliance by DOT as the result of the failure to submit or disapproval of a program, grant and project approvals may continue to be made, and solicitations and awards of contracts may proceed.

Later modifications of MBE programs may be required by a DOT operating element as a result of annual percentage goal reviews, investigations of complaints, or compliance reviews, in accordance with §§ 23.45(g)(6), 23.73, and 23.75.

Transit Vehicle Manufacturer Requirement

UMTA recipients that purchase transit vehicles must advise major transit vehicle manufacturers that provisions implementing § 23.41(e) are being developed for issuance as a Notice of Proposed Rule Making (NPRM). Comments on the proposed rule will be reviewed and final provisions will constitute Subpart D of the regulation. Recipients must continue to abide by the policy expressed in the UMTA Deputy Administrator's letter of November 13, 1978. Major transit vehicle manufacturers must have an MBE program pursuant to provisions in UMTA's November 13, 1978 letter. All applicants for transit vehicle purchase grants must address the provisions of this subsection in their MBE programs. All questions concerning these interim requirements are to be referred to the UMTA Office of Civil Rights.

Relationship of Primary Recipients and Subrecipients

The regulation defines "recipient" as "any entity, public or private to whom DOT financial assistance is extended directly, or through another recipient." A "primary recipient," is defined as a recipient who receives DOT financial assistance and passes all or some of the assistance on to another recipient." For example, if a State Department of Transportation receives Federal highway funds and passes some of the funds on to a county, the State is the primary recipient and the county is the subrecipient. Likewise, if a State receives Federal planning funds and passes some of these funds on to a Metropolitan Planning Organization (MPO), the State DOT is the primary recipient and the MPO is the subrecipient. Both primary and subrecipients are recipients, and therefore are subject to the requirements of the regulation.

All subrecipients must follow the requirements of § 23.43, including insertion of MBE clauses in grant agreements and contracts. Some subrecipients may fall directly under the affirmative action program requirement of § 23.45 of the regulation. For example, a subrecipient that receives Federal highway funds is required to have an MBE program, whether that recipient is a primary recipient or a subrecipient. Likewise, a recipient receiving UMTA funds in excess of $250,000, exclusive of transit vehicle purchases, would have to prepare an MBE program, whether it was a primary recipient or subrecipient.

Whenever a subrecipient is covered by the regulation in its own right, it has the responsibility to take all steps necessary to carry out all applicable parts of the regulation, including preparing an MBE program where it is required. The prime recipient, through assurances or subgrant agreement provisions, ensures that the subrecipient does so. For example, if a State DOT passes through Federal highway funds to one of its counties, the State agency's agreement with the county should bind the county to place appropriate MBE clauses in federally-assisted contracts and to devise an MBE program covering those contracts.

The subrecipient's program, which would include both overall and contract goals for the subrecipient, is approved by the primary recipient subject to review by the concerned DOT operating administration. The overall goal for the primary recipient includes funding of subrecipients. Therefore, the primary recipient is responsible through its own overall goal for the performance of subrecipients. Moreover, noncompliance with applicable provisions of the regulation by a subrecipient subjects that subrecipient to sanctions under the regulations. In the case of noncompliance by some but not all subrecipients of a primary recipient, only the Federal funds passing through to the noncomplying subrecipients would be affected by sanctions.

There are also cases in which a primary recipient does not pass through sufficient DOT funds to any one subrecipient to subject any subrecipient in its own right to the MBE program requirement of the regulation. For example, a State DOT may pass UMTA funds through to 10 small cities. Each of the subrecipients gets $100,000. Therefore, none of the subrecipients in its own right must prepare an MBE program. However, the primary recipient has received $1 million of Federal funds, making it responsible for preparing an MBE program. The MBE program should include an overall goal and provide for contract-specific goals in each covered contract let by each of the subrecipients. This responsibility for creating these contract-specific goals should be passed on to the subrecipients through a provision in the subgrant agreement. Unless the primary recipient chooses to impose such a requirement on its own initiative, each of the subrecipients would not have to have a full MBE program or an overall goal.

Where subrecipients must prepare MBE programs, the Department will allow a reasonable time past August 1

for them to do so. The Department realizes that many subrecipients are unlikely to be aware at this time of their obligations under the regulation. However, the affirmative action program of primary recipients should include a timetable for the production, review, and approval or disapproval of subrecipient plans by the primary recipient.

Requirements Concerning Lessees

Section 23.43(d)(1) prohibits recipients from excluding MBEs from participation in business opportunities by entering into long-term exclusive agreements with non-MBEs for the operation of major transportation related activities for the provision of goods and services to the facility or to the public on the facility. To fall under this prohibition, an agreement must be both long-term and exclusive (i.e., prohibit or exclude competitors from operating on the facility).

For purposes of this provision, the Department's policy will be to regard a "long-term" contract as one for a term of five years or more. As the preamble states about this provision, the purpose of the prohibition is to prevent situations in which MBEs are excluded over a long period of time from an opportunity to participate in a major business opportunity offered by a DOT recipient. On a case-by-case basis, the Department will consider granting exemptions from this prohibition, (see § 23.41(f)) where special local circumstances make it extraordinarily important to enter a long-term exclusive lease or other arrangement with a non-minority firm and there are guarantees of adequate MBE participation (e.g. through subleasing) throughout the entire life of the agreement.

Section 23.43(d)(2) requires some recipients that have business opportunities for lessees to set overall goals for the use of MBEs. The Department did not intend through this requirement to cause lease arrangements with airlines, in their normal passenger or freightcarrying capacities, to be included in lessee goals or the base from which these goals are calculated. At the same time, as the preamble to the regulation indicates, the Department is concerned with business opportunities to firms that provide services to the facility or the public on the facility. This concern extends to firms that do business devices other than through lease agreements, *per se*, and the fact that a firm's agreement with the airport is called something other than a "lease" (e.g. a "permit") should not necessaily mean that it would be excluded from consideration in the goal-setting process. For example, a business occupying a traditional "concessionaire" position at an airport should be included, even though it is a permittee, while individual cab drivers who must have permits should not be. Permittees and businesses of this kind that receive opportunities in DOT-assisted facilities through means other than leases should be included in goals and the base from which goals are calculated.

The Department has also been asked how goals should be calculated under this paragraph. Goals should be calculated on the basis of a percentage of the revenues expected to be generated by all lessees. Recipients' submissions to DOT should also reflect a commitment to obtain reasonable numbers of MBE lessees.

Section 23.43(d)(3) says that except as provided in section 23.43, recipients are not required to include lessees in their affirmative action programs. This provision was inserted because many provisions of the MBE programs established for goods and services contractors are not readily applicable to lessees. However, recipients may count toward their MBE goals for lessees only those firms that are eligible MBEs. Consequently, the certification requirements and standards of §§ 23.51 and 23.53 apply to MBE lessees. Lessees themselves do not have to carry out affirmative action programs for MBEs under the regulation.

Coverage of the Regulation

Two provisions of the regulation have given rise to questions about the coverage of the regulation. The definition of "program" in § 23.5 states that a program includes "the entire activity any part of which receives DOT financial assistance." At the same time, § 23.45(H) applies MBE identification requirements to "DOT-assisted contracts." Consequently, the question has arisen whether the requirements of the rule apply to only DOT-funded portions of recipient's activities or to non-DOT funded portions as well.

The coverage of the rule itself extends to all portions of a DOT-assisted program or facility, even to portions that do not receive any DOT funds directly. This interpretation is consistent with that of civil rights laws generally. For example, under Title VI, if an airport receives Federal funds for runway construction, it cannot discriminate against minorities with respect to the services provided through a non-Federally funded terminal. Likewise, under Title IX, the intercollegiate athletic program of a university receiving Federal funds cannot discriminate against women, even though the athletic program itself receives no Federal funds.

Under this MBE regulation, the total program of a recipient getting funds is subject to the requirement not to discriminate against MBEs. The program structure recipients must establish as part of their MBE programs (e.g. policy statement, liaison officer, directory, investigation of the possibilities of MBE banks) has obvious application to both DOT-funded and non-DOT-funded parts of a recipient's program. At the same time, provisions of the regulation related to specific contracts (e.g. contract clauses, overall and contract goals, certification requirements, award selection procedure, set-asides) apply only to DOT-assisted contracts.

The MBE Program

Applicants and recipients in the categories listed under § 23.41 (a)(2)(i thru vii) must implement an MBE program containing the elements required in § 23.45(e) thru (i). Those applicants and recipients in categories listed under § 23.41(a)(3)(i thru v) must implement an MBE program containing all of the elements required under § 23.45 (see Attachment A). The requirements of § 23.49 must also be satisfied. To facilitate DOT review of programs, each of the MBE program elements should be addressed in the same order as they appear in § 23.45.

MBE Policy Statement

Each recipient required to issue an MBE policy statement in accordance with § 23.45 (a) should include a copy of the statement with its submission.

MBE Liaison Officer

In designating an MBE liaison officer as required under § 23.45(b), the Chief Executive Officer may appoint personnel in other departments, such as legal, procurement, and construction, to assist in carrying out the MBE program and be held responsible and accountable by the recipient for exercising these functions through the regular performance evaluating process. The person(s) designated and their responsibilities should be spelled out in the MBE program.

Affirmative Action Techniques to Insure MBE Participation

In addition to the affirmative action techniques listed in § 23.45(c), the recipient may do the following to assist MBEs:

—Provide information on its organization and contractual needs;

—Offer instructions on bid specifications, procurement policy,

procedures, and general bidding requirements;

—Permit MBEs to review and evaluate successful bid documents of similar procurement;

—Use debriefing sessions to explain why certain bids were unsuccessful;

—Provide MBEs, projected procurement information or contracting schedules;

—Instruction on job performance requirements;

—Certification, subcontracting and bonding requirements.

This data may be disseminated through written materials, seminars, workshops, and specialized assistance to individual firms.

MBEs must be knowledgeable about the recipient's procurement and contracting activities in order to participate. Efforts to facilitate MBEs knowledge about the recipient's activity may include holding seminars or workshops periodically to acquaint the MBE community with appropriate procurement and contracting information. These sessions may be closely coordinated with organizations that are familiar with the problems experienced by MBEs. As an alternative, the recipient may invite an MBE trade association or assistance agency to conduct such workshops.

Handbook

Written contracting information may also be made available through a handbook containing the following:

—Procedures outlining specific steps on how to bid;

—Prerequisites for bidding on contracts;

—Information on how plans and specifications can be obtained;

—Names of persons to contact concerning questions on bid documents;

—Names of procurement officers and office hours;

—Types of supplies and services purchased;

—Explanations of standard contract implementation procedures and requirements, concerning such matters as timely performance of work, contract changes, and payment schedules.

Bid and Specification Information

Efforts to inform MBEs of bid notices and specifications related to their capability may include the following:

—The placement of bid notices in the Commerce Business Daily, Dodge Bulletin, MBE trade association newsletter, major local newspapers, as well as minority and female interest periodicals;

—The development of mailing lists for newsletters including MBEs and their associations;

—The bid notices may be sent to MBE trade associations, technical assistance agencies, minority and female economic development groups, and MBEs with capabilities relevant to the bid notice as identified by the recipient's MBE data bank;

—Bid specifications may be made available to MBE contractor associations and technical assistance agencies;

MBEs and MBE organizations may be provided with lists of majority firms bidding as primes;

—A lead time of at least 20 days may be used by both the recipient and firms bidding as prime contractors, if allowable, for advertisement of all invitations for bid in order that all firms have ample time to develop a complete bid package or proposal and secure necessary assistance;

—A pre-bid conference may be held to provide firms with an opportunity to ask questions about the MBE requirements.

Outreach: MBE Advisory Committee

The MBE program staff may make an extensive *outreach* effort to encourage MBEs to discuss their capabilities with the staff, so that more knowledge may be obtained regarding these firms. An open door policy should be maintained. The creation of a Minority Business Enterprise Advisory Committee may be an effective tool in communicating with MBEs. This committee has several important functions including:

—Serving as an advocate for the local minority business enterprise community;

—Providing a source of information to identify additional MBEs;

—Providing assistance in resolving major procurement and contracting problems affecting MBEs;

—Communicating the recipient's MBE program to minority and female businesses;

—Assisting in developing MBE program goals and procedures;

—Providing a sounding board to assess proposed changes in the MBE program;

—Providing an independent assessment of the MBE program;

In order to be effective, the committee should be composed of representatives of MBE trade associations and MBE assistance organizations. Selecting individual minority business/female business persons who do not represent a formal association is frequently viewed by MBE firms and non-minority businesses as simply favoring one individual. Members should be selected primarily because of their knowledge of business and/or the minority and female business community. Efforts should be made to obtain representation from the various groups within the minority/female community. The composition of the committee should be reflective of the types of improvements being considered and undertaken. Committee members may participate in a training session which familiarizes them with Federal requirements, administrative procedures, and personnel relating to their activities.

Procedures may also be developed for the committee to make comments and recommendations to both the chief executive officer and the Board of Directors. All proceedings should be recorded and placed on file.

Program Submission

The recipient's plans for setting up any of these or other mechanisms should be set out in the MBE program submission, though the mechanisms themselves does not have to be in place at the time the program is submitted. The program should include a general timetable for establishing such mechanisms, however.

Minority and Female Owned Banks

Recipients are encouraged to use banks owned and controlled by minorities or women under § 23.45(d). Recipients should include in their agreements with prime contractors a provision to encourage them to use the services of banks owned and controlled by minorities or women. Recipients may also share any information acquired in their investigations of the services offered by those banks with the prime contractors to facilitate the use of banks owned and controlled by minorities or women. MBE program submissions should relate what has been and will be done in this regard.

MBE Directory

In putting together an MBE Directory, as required under § 23.45(e), recipients may obtan information from the following sources as well as by doing research in their own areas.

—Names, addresses and telephone numbers;

—Type of MBE (minority or female);

—Date business established;

—Legal structure of business;

—Percent minority/female ownership;

—Capacity;

—Previous work experience;

—Bonding capability;

—Type of work/service provided;

—Contact persons;

The directory may be categorized by types of firms to facilitate identifying

businesses with capabilities relevant to a particular specification, request for approval, or purchase order. It may also be made available to bidders and proposers in their efforts to meet the MBE requirements. The directory may be compiled from sources of MBE capability information as well as outreach efforts. The following is a partial list of sources:

—*State and local directories*—In some geographic areas detailed capability information is contained in these directories; while in other places the data is too superficial to be of practical use;

—*MBE trade associations*—These associations are quite active in a number of cities and will provide information on their members;

—*Local Minority Business Development Agency (MBDA) funded assistance agencies*—These agencies which provide management and marketing technical assistance are also sources of MBE capability data.

—*Local and regional Small Business Administration offices*—SBA provides loans and other services to small businesses and therefore can be of assistance in identifying MBEs. Also, SBA certifies MBEs for a set-aside program for Federal procurement, referred to as the "8(a) Program";

—*National Minority Supplier Development Counsel MBE Data Bank*—Recipients can join this council and obtain detailed data on MBE firms. In addition, some individual major corporations maintain lists of MBE firms. The sources used to compile the directory should be included therein.

In its MBE program submission, recipients should include any directory or part of a directory they have compiled to date and their plans for completing a directory (as to content, specific efforts to find MBEs to list, and timetables). A completed directory is not required for MBE program approval in 1980. However, a reasonable plan & timetable for completing the directory is required.

MBE Eligibility

The recipient must meet the requirements of § 23.45(f) to ensure that its MBE program benefits only minority and women owned and controlled firms. For a discussion of certification requirements and procedures, the recipient is referred to §§ 23.51 through 23.55. The rule requires recipients must use Schedules A and B of the regulations for determining MBE eligibility unless the Department approves an alternate method. Until OMB clears these forms, however, their use, while strongly recommended as policy in order to prevent fraud, is not required.

Goals for MBEs

One of the questions most frequently asked of the Department concerns how recipients are to set the overall and contract goals required by § 23.45(g) of the regulation. Often, these questions seem to be asking for a convenient formula by which recipients can quickly calculate goals. To our knowledge, no such formula exists. However, a few suggestions might be helpful to recipients as they try to set overall and contract goals.

Overall goals should reflect the full range of the recipient's projected contracting activities which the MBE program will cover. Given that the objective of the regulation is to increase minority business participation in DOT-assisted contracting, overall goals should be set to call for an increase in MBE participation above existing levels, unless the recipient can show that it cannot reasonably attain increased MBE participation. In deciding what may be an appropriate goal, a recipient may take into account the size of the total universe of contractors with which it has dealt on DOT-assisted programs in the past and the number of MBE firms potentially able to do the kind of work involved in DOT-assisted contracts (whether or not the recipient has dealt with these MBE firms before).

In order to set a reasonable overall goal, the recipient should look hard for MBE firms, taking such actions as checking existing lists and directories of MBEs, advertising in general and minority-focus media asking MBEs to make themselves known to the recipient, and making direct contacts with MBEs that it has worked with in the past, associations of MBEs, and minority community organizations. The recipient may also take into account the minority population of the area in which it operates, though population usually will be only a very general guide to the appropriate percentage of MBE participation that should be established as an overall goal. In areas where MBE goals have already been set as the result of action by recipients or other Federal, state or local governments, these goals—and the resultant MBE participation—may also be a useful guide to setting realistic goals.

These suggestions should be helpful to recipients. Nevertheless, the Department realizes that setting goals is not a science, and that an exercise of judgment is inevitably involved. Particularly during this first year of implementing the MBE regulation, the Department intends in reviewing recipients' overall goals to take into account the learning process that recipients are undergoing. To this end, it is important that recipients submit with their MBE programs not only a goal but a description of how they arrived at that goal.

In setting contract goals, a first point of reference is the overall goal. Over the time period covered by the overall goal, the recipient should set contract goals that will result in meeting the overall goal. Clearly, individual contract goals can vary from the overall goal, depending on the location of the work (for example, a contract in a large urban area might reasonably have a higher contract goal than a contract in a rural area distant from a large city) and the availability of MBEs to do the particular kind of work involved in the contract. In determining the availability of MBEs to do the work, many of the same considerations discussed concerning setting overall goals are applicable.

Identification of MBEs by Competitors

The regulation (§ 23.45(h)) establishes a requirement that competitors for prime contracts that wish to remain in contention for contracts submit names of another information about MBEs after bids are opened but before contract award. This mechanism was established to reduce the administrative burden on contractors that would occur if all competitors were required to submit this information with their bids or proposals. Language spelling out this requirement should be included in all solicitations that will have MBE contract goals.

Some recipients have said that this provision will create a problem for them by allowing competitors who have bid too low to escape being awarded the contract. This provision was not intended to allow unrealistically low bidders to evade their normal bid responsibilities, and does not require recipients to surrender any rights they may have vis-a-vis bidders as the result of bid bonds. However the Department is reviewing this provision in light of recipients' experience with it.

Operation of Award Selection Procedure

The preamble to the regulation, on pages 21179–21180 describes how the award selection procedure of § 23.45(i) operates. The hypothetical example used on these pages assumes, for simplicity, that there is a single MBE goal. However, under the regulation, there are in fact dual MBE goals, one for minority-owned firms and another for women-owned firms. The question has arisen how the award selection procedure works in this case. The

following hypothetical example illustrates this process. The reviewers of the goals need only perform a simple arithmetic addition step before applying the approach spelled out in the regulation, by summing each bidder's performance in meeting both goals. However, in summing each bidder's performance in meeting the goals, bidders are never credited with exceeding any single goal. For example, if a minority business goal is 10 percent, and the bidder has 12 percent participation, it is still credited only with 10 percent participation for purposes of the award selection procedure. Consider the following bidding situation:

Goals	Women 5 pct.	Max. credit	Minorities 5 pct.	Max. credit	Total 10 pct.
Bidder No. 1...	4	4	5	5	9
Bidder No. 2...	3	3	6	5	8
Bidder No. 3...	7	5	7	5	10
Bidder No. 4...	6	5	5	5	10
Bidder No. 5...	1	1	9	5	6
Bidder No. 6...	3	3	3	3	6
Bidder No. 7...	2	2	1	1	3
Bidder No. 8...	0	0	8	5	5

Each bidder is then listed by the sum of its total goal achievement as follows:

Bidder	Percent credited
No. 3	10
No. 4	10
No. 1	9
No. 2	8
No. 5	6
No. 6	6
No. 8	5
No. 7	3

The total of the goals for minorities and women—10 percent in this example—is the standard for responsibility/responsiveness. The presumption of insufficient reasonable efforts of § 23.45(i) operates with respect to those competitors falling below ten percent total participation. The award selection procedure then takes place as explained on pages 21179–21180.

Consistency With State Law of Award Selection Procedure

In order to be a responsible/responsive bidder (proposer), a contractor must meet MBE contracting goals or demonstrate sufficient reasonable efforts to do so. Meeting contract goals or making sufficient reasonable efforts to do so, no less than meeting technical specifications or complying with bid procedures, is a necessary condition of responsiveness and/or responsibility. Among responsible and responsive bidders—that is, those bidders that meet the MBE requirements of the regulation, among other things—the bidder offering the lowest price, if that price is reasonable, is awarded the contract. This procedure changes award procedures only in that it adds a new condition of responsivenes and/or responsibility. Consequently, the procedure is not deemed by DOT to be inconsistent with State statutes that require awards to the lowest responsible and/or responsive bidder.

MBE Compliance by Contractors and Subrecipients

Recipients must include in their MBE Programs the methods by which contractors and subrecipients are to comply with their MBE requirements, in accordance with § 23.45(j).

MBE Set-Asides

As permitted under § 23.45(k), MBE set-asides may be established. A set-aside is a procurement technique that limits consideration of bids or proposals to those submitted by MBEs in cases where MBEs with capabilities consistent with contract requirements exist in sufficient numbers to permit competition. The designation of the contracts to be set-aside should be based on the known capabilites of MBEs eligible to compete, thereby ensuring that a qualified firm will be found and increasing the possibility for competition among eligible firms. At least three MBEs with capabilities consistent with contract requirements must be available. These three firms must actually submit bids or proposals for the set-aside to operate if this is the type of procurement for which bids of proposal are usually submitted. This provision is not intended, for example, to prohibit sole-source procurements using MBE. The MBE program should specify the type or dollar value of contracts to be set-aside and explain that at least three MBEs must compete. In order to use a set-aside properly, the recipient would state in its solicitation whether a set-aside will apply to minority and/or female-owned and controlled firms.

Exemptions

The basic purpose of an exemption is to provide a means for handling exceptional situations in which it would be unreasonable to apply a generally applicable regulation requirement to a particular parts in a particular situation. As a general matter, exemptions from DOT rules may be granted only upon showing of special local circumstances and are not granted on the basis of arguments made and considered during rulemaking.

One ground on which an exemption may be requested is that State or local law prohibits a particular provision in its program. Such a request for exemption should include a legal memorandum explaining how the particular law relied upon affects the recipient's ability to comply with the regulation. It should be emphasized that this exemption provision is concerned with only explicit legal prohibitions.

Where state or local law is silent with respect to an action required by the regulation, neither authorizing nor prohibiting it, there is no prohibition of the kind referred to by the section. State or local laws that require awards to be made to the lowest responsible and/or responsive bidder, for the reasons above, are not considered to be legal prohibitions against compliance with the programs called for by the regulations. Moreover, even in event that a certain State or local law explicity and directly prohibits a recipient from engaging in an activity required by the regulation, the Secretary still has discretion to grant or not to grant the request for exemption.

For example, the Secretary could exercise discretion not to grant an exemption to a recipient where a local law prohibited local public bodies from setting any goal for the participation of minority business in contracts. The Secretary, of course, has no authority to insist that a State or locality adjust its laws to conform to a Department of Transportation Regulation. However, with respect to those public bodies that wish to receive Department of Transportation funds, the Department does have the authority to condition Federal financial assistance upon compliance with Federal regulations and policies. It is possible that in some cases a recipient could remain eligible for receiving Federal funds only if a state or local law were changed to make possible compliance with this regulation.

Lead Agency Concept

For administrative convenience, DOT has designated a lead agency to review MBE programs. Recipients should submit their MBE programs to the following DOT operating administrations, even if they receive funds from other DOT elements as well: Airports (FAA); State Departments of Transportation (FHWA); State Highway Agencies (FHWA); Railroads (FRA); Mass Transportation Agencies (UMTA); Metropolitan Planning Organizations

(UMTA); State Highway Safety Officers (NHTSA). DOT will specifically designate lead agencies for types of recipient organizations not listed or in cases where further guidance is needed.

Certification Appeals

Section 23.55 provides a forum to appeal denials of certification as an MBE. Under the regulation, only certified MBEs count toward making MBE goals, either for contractors or recipients. At the same time, under normal circumstances, the regulation does not contemplate delays in contracting actions or retroactive changes in contracting actions caused by certification problems. For this reason, charges in the status of an MBE as a result of a certification appeal under section 23.55 have only a prospective effect.

For example, if a bidder submits the names of three firms it believes to be minority businesses to the recipient, and the recipient certifies only two of these firms as MBEs, then the prime contractor is credited only with the percentages of the contract amount attributable to these two certified MBEs, even if this leaves the contractor short of the MBE goal. In such a case, the recipient should give the contractor a reasonable time in which to substitute another MBE for the firm denied certification. The contractor should not be allowed to change its overall price quotation as a result of this substitution. However, the recipient resolicit the contract in such a case.

Subsequently, if the MBE denied certification appeals this denial and the Secretary grants the appeal, the firm will be considered as a certified MBE for purposes of all future contracts. However, unless the certification appeal has been granted before the original contract is awarded, the award of the original contract proceeds without reference to the appeal. (In appropriate cases, the Secretary or the operating element concerned may instruct the recipient to hold up award of the contract for a reasonable time to permit an appeal to be decided.) Neither the MBE who appealed the certification denial successfully or the prime contractor who was to have used the MBE in question is entitled under the regulation to any relief with respect to the award of the original contract.

In the reverse case, in which an MBE is granted certification and, on the basis of information supplied to the Secretary by a third party, the Secretary decide that the certification was in error and should not have been granted, the original contracting action is not disturbed. That is, the prime contractor for whom the disputed MBE is working receives credit toward meeting the contract goal with respect to award of the prime contract. Neither the prime contract or the subcontract is subject to cancellation because of the subsequent overturning of the recipient's certification by the Secretary. (As with appeals by an MBE denied certification, the Secretary or the concerned operating element may, in appropriate circumstances, instruct the recipient to delay award of a contract pending resolution of a challenge to the certification of the MBE.) When the recipient has certified an MBE and the certification is overturned, the recipient may not count the dollar of the work performed by the decertified MBE toward its overall goal, however.

There is an important exception to these principles. In the event that the recipient's certification or refusal to certify a firm as an MBE is found to be discriminatory or in bad faith (e.g. the recipient knew or should have known that the MBE firm it certified was a "front" for a non-minority firm, but certified the firm anyway) retroactive corrective action may be required by the Department. For example, a prime or subcontract could be cancelled and resolicitation ordered. The MBE firm is entitled to recover from the recipient the costs it incurred to participate in the original solicitation from the recipient.

Dated: June 27, 1980.

Issued at Washington, D.C.

Neil Goldschmidt,

Secretary of Transportation.

Attachment A—Applicant and Recipient Requirement Chart

Grant Category and Required MBE Program Elements

(1) Funds exceeding $250,000 (exclusive of transit vehicle purchases under sections 3, 5, and 17 of the Urban Mass Transportation Act of 1964, as amended (UMTA Act), and Federal Aid Urban Systems (FAUS); 23.45(e)–(i)
(2) Funds exceeding $100,000 under sections 6 and 8 of the UMTA Act; 23.45(e)–(i)
(3) Section 402 program funds of the National Highway Traffic Safety Administration (NHTSA); 23.45(e)–(i)
(4) Funds exceeding $250,000 awarded by the Federal Aviation Administration (FAA) to nonhub airports; 23.45(e)–(i)
(5) Funds exceeding $400,000 awarded by FAA; 23.45(e)–(i)
(6) Planning funds in excess of $75,000 awarded by FAA; 23.45(e)–(i)
(7) Licenses under the Deep Water Port Act of 1974; 23.45(e)–(i)
(8) Federal-aid highway program funds; all elements under 23.45
(9) Funds exceeding $500,000 (exclusive transit vehicle purchases under sections 3, 5, and 17 of the UMTA Act and FAUS; all elements under 23.45
(10) Funds exceeding $200,000 under section 6 and 8 of the UMTA Act; all elements under 23.45
(11) Funds exceeding $500,000 awarded by FAA to large, medium and small hub airports; all elements under 23.45
(12) Financial assistance, including loan guarantees, by the Federal Railroad Administration and the United States Railway Association; all elements under 23.45

[FR Doc. 80-20082 Filed 7-2-80; 8:45 am]
BILLING CODE 4910-62-M

National Highway Traffic Safety Administration

49 CFR Part 571

[Docket No. 78-12; Notice 2]

Lamps, Reflective Devices, and Associated Equipment

AGENCY: National Highway Traffic Safety Administration, Department of Transportation.

ACTION: Final rule.

SUMMARY: This notice amends Motor Vehicle Safety Standard No. 108 to allow an optional method of measuring side marker lamp light output for all vehicles less than 30 feet in overall length, regardless of width. This option currently applies to all vehicles less than 80 inches in overall width, regardless of length. This amendment is in response to a petition for rulemaking submitted by Chrysler Corp. The effect of the amendment is to remove a restriction on vehicles which are normally built in versions less than 80 inches in overall width but which have derivatives that exceed this dimension.

EFFECTIVE DATE: July 3, 1980. Since the amendment relieves a restriction it may be made effective immediately.

FOR FURTHER INFORMATION CONTACT: John Simeroth, Crash Avoidance Division, Office of Vehicle Safety Standards, National Highway Traffic Safety Administration, 400 Seventh Street, S.W., Washington, D.C. 20590 (202-426-2715).

SUPPLEMENTARY INFORMATION: A Notice of Proposed Rulemaking on this subject was published on September 7, 1978 (43 FR 39839).

Standard No. 108 requires the photometric requirements for side marker lamps to be met at test points 45 degrees outboard and inboard of the lateral center line passing through the lamp. However, if a vehicle is less than 80 inches in overall width, paragraph S4.1.1.8 of Motor Vehicle Safety Standard No. 108 allows photometric measurements of side marker lamps to "be met for all inboard test points at a

distance of 15 feet from the vehicle and on a vertical plane that is perpendicular to the longitudinal axis of the vehicle and located midway between the front and rear side marker lamps." This results in a measurement of less than 45 degrees instead of a fixed 45 degrees.

Chrysler Corp. petitioned that the option be available to all vehicles regardless of width. In its opinion, the effect of differing requirements imposes needless restrictions on smaller size vehicles normally built in versions less than 80 inches but which have special derivatives which exceed this width:

"For example, a pick-up truck may be designed with wraparound front or rear lamps (that meet S4.1.1.8). If dual rear wheels are installed on this same vehicle, its width will exceed 80 inches and different side marker lamp requirements will apply * * * (and) auxiliary lamps may have to be used on these wider vehicles."

The NHTSA agreed with Chrysler's views, but with the reservation that the exception should not apply to vehicles whose overall length is 30 feet or greater. None of these vehicles are currently eligible for this option since all exceed 80 inches in overall width. Those vehicles are required to have an intermediate side marker lamp that is centrally located between the front and rear side marker lamps. All three markers need to be clearly visible to motorists from the side so that the overall vehicle size is evident. Thus, for vehicles 30 feet or longer the 45 degree visibility angles are more appropriate than the provisions of paragraph S4.1.1.8. Accordingly, it was proposed that S4.1.1.8 of 49 CFR 571.108 Motor Vehicle Safety Standard No. 108 be revised by deleting the words "80 inches in overall width" and substituting "30 feet in overall length."

Six comments were received in response to the Notice of Proposed Rulemaking, all of which supported it. Typical was the opinion of American Motors that it is inappropriate to have differing side marker requirements based on a criterion related to vehicle width when the primary purpose of the lamp is to indicate overall length.

PART 571—FEDERAL MOTOR VEHICLE SAFETY STANDARDS

In consideration of the foregoing, paragraph S4.1.1.8 of 49 CFR 571.108, Motor Vehicle Safety Standard No. 108 is revised as follows:

§ 571.108 Motor Vehicle Safety Standard No. 108.

* * * * *

S4.1.1.8 For each motor vehicle less than 30 feet in overall length, the photometric-minimum candlepower requirements for side marker lamps specified in SAE Standard J592e "Clearance, Side Marker, and Identification Lamps", July 1972, may be met for all inboard test points at a distance of 15 feet from the vehicle and on a vertical plane that is perpendicular to the longitudinal axis of the vehicle and located midway between the front and rear side marker lamps.

The agency has considered the impacts of this amendment under Executive Order 12044, "Improving Government Regulations," and determined that they are not significant. Further, the impacts are so minor as not to warrant the preparation of a regulatory evaluation. The effect of the amendment is to relieve a minor restriction under which a manufacturer in certain circumstances would have to provide an additional or modified side marker lamp.

The program official and attorney responsible for developing this amendment are John Simeroth and Taylor Vinson respectively.

(Secs. 103, 119, Pub. L. 89-563, 80 Stat. 718 (15 U.S.C. 1392, 1407); delegation of authority at 49 CFR 1.50)

Issued on June 26, 1980.

Joan Claybrook,

Administrator.

[FR Doc. 80-19835 Filed 7-2-80; 8:45 am]

BILLING CODE 4910-59-M

INTERSTATE COMMERCE COMMISSION

49 CFR Part 1033

[Service Order No. 1400, Amdt. No. 2]

Denver and Rio Grande Western Railroad Co.; Authorized To Operate Over Tracks of the Atchison, Topeka and Santa Fe Railway Co.

AGENCY: Interstate Commerce Commission.

ACTION: Amendment No. 2 to Service Order No. 1400.

SUMMARY: This order amends Service Order No. 1400, by extending its expiration date until 11:59 p.m., September 30, 1980. Service Order No. 1400 authorizes DRGW to operate over tracks of the ATSF near Fountain, Colorado. This operation will provide for more efficient operations, improve car utilization, and transit time of unit coal trains.

EFFECTIVE DATE: 11:59 p.m., June 30, 1980. Expires: 11:59 p.m. September 30, 1980.

FOR FURTHER INFORMATION CONTACT: M. F. Clemens, Jr. (202) 275-7840.

SUPPLEMENTARY INFORMATION:

Decided: June 27, 1980.

Upon further consideration of Service Order No. 1400 (44 FR 58913, 45 FR 23695), and good cause appearing therefor:

It is ordered,

Sections 1033, 1400, Service Order No. 1400, The Denver and Rio Grande Western Railroad Company authorized to operate over tracks of the Atchison, Topeka and Santa Fe Railway Company is amended by substituting the following paragraph (e) for paragraph (e) thereof:

(e) *Expiration date.* The provisions of this order shall expire at 11:59 p.m., September 30, 1980, unless modified, changed or suspended by order of this Commission.

Effective date. This amendment shall become effective 11:59 p.m., June 30, 1980.

This action is taken under the authority of 49 U.S.C. 10304-10305 and 11121-11126.

This order shall be served upon the Association of American Railroads, Car Service Division, as agent of the railroads subscribing to the car service and car hire agreement under the terms of that agreement and upon the American Short Line Railroad Association. Notice of this order shall be given to the general public by depositing a copy in the Office of the Secretary of the Commission at Washington, D.C., and by filing a copy with the Director, Office of the Federal Register.

By the Commission, Railroad Service Board, members Joel E. Burns, Robert S. Turkington and John H. O'Brien.

Agatha L. Mergenovich,

Secretary.

[FR Doc. 80-19985 Filed 7-2-80; 8:45 am]

BILLING CODE 7035-01-M

49 CFR Part 1033

[Service Order No. 1420, Amdt. No. 1]

Tippecanoe Railroad Co.; Authorized To Operate Over Tracks Leased From the State of Indiana

AGENCY: Interstate Commerce Commission.

ACTION: Amendment No. 1 to Service Order No. 1420.

SUMMARY: This order amends Service Order No. 1420, by extending its expiration date until July 31, 1980, and is conditioned upon timely filing of

appropriate application for permanent authority. Service Order No. 1420 authorizes Tippecanoe Railroad Company to operate over tracks leased from the State of Indiana.

EFFECTIVE DATE: 11:59 p.m., June 30, 1980. Expires: July 31, 1980.

FOR FURTHER INFORMATION CONTACT: M. F. Clemens, Jr. (202) 275-7840.

SUPPLEMENTARY INFORMATION:

Decided: June 27, 1980.

Upon further consideration of Service Order No. 1420 (45 FR 2655), and good cause appearing therefor:

It is ordered,

Sections 1033, 1420, Service Order No. 1420, Tippecanoe Railroad Company authorized to operate over tracks leased from the State of Indiana is amended by substituting the following paragraph (e) for paragraph (e) thereof:

(e) *Expiration date.* The provisions of this order shall expire at 11:59 p.m., July 31, 1980, unless modified, changed or suspended by order of this Commission.

Effective date. This amendment shall become effective at 11:59 p.m., June 30, 1980.

This action is taken under the authority of 49 U.S.C. 10304-10305 and 11121-11126.

This order shall be served upon the Association of American Railroads, Car Service Division, as agent of the railroads subscribing to the car service and car hire agreement under the terms of that agreement and upon the American Short Line Railroad Association. Notice of this order shall be given to the general public by depositing a copy in the Office of the Secretary of the Commission at Washington D.C., and by filing a copy with the Director, Office of the Federal Register.

By the Commission, Railroad Service Board, members Joel E., Burns, Robert S. Turkington and John H. O'Brien.

Agatha L. Mergenovich,

Secretary.

[FR Doc. 80-19983 Filed 7-2-80; 8:45 am]

BILLING CODE 7035-01-M

---

49 CFR Part 1033

[Service Order No. 1389, Amdt. No. 3]

Transkentucky Transportation Railroad Co.; Inc. Authorized To Operate Over Tracks Abandoned by Louisville and Nashville Railroad Co.

AGENCY: Interstate Commerce Commission.

ACTION: Amendment No. 3 to Service Order No. 1389.

SUMMARY: This order amends Service Order No. 1389 by extending its expiration date until 11:59 p.m., August 31, 1980. Transkentucky Transportation Railroad, Inc. (TTI) is authorized to operate over tracks of Louisville and Nashville Railroad Company between Maysville and Paris, Kentucky. TTI has filed an application for a certificate of public convenience and necessity. This amendment continues the Service Order in effect pending the Commission's decision upon the application.

EFFECTIVE DATE: 11:59 p.m., June 30, 1980. Expires: 11:59 p.m., August 31, 1980.

FOR FURTHER INFORMATION CONTACT: M. F. Clemens, Jr. (202) 275-7840.

SUPPLEMENTARY INFORMATION:

Decided: June 27, 1980.

Upon further consideration of Service Order No. 1389, (44 FR 44853, 45 FR 14863, 45 FR 37843) and good cause appearing therefor:

It is ordered:

Sections 1033, 1389, Service Order No. 1389, Transkentucky Transportation Railroad Inc., Authorized to Operate Over Tracks Abandoned by the Louisville and Nashville Railroad Co. is amended by substituting the following paragraph (g) for paragraph (g) thereof:

(g) *Expiration date;* The provisions of this order are extended until 11:59 p.m., August 31, and shall expire unless otherwise modified, amended or vacated by order of this Commission.

Effective date. This amendment shall become effective at 11:59 p.m., June 30, 1980.

This action is taken under the authority of 49 U.S.C. 10304-10305 and 11121-11126.

This amendment shall be served upon the Association of American Railroads, Car Service Division, as agent of the railroads subscribing to the car service and car hire agreement under the terms of that agreement and upon the American Short Line Railroad Association. Notice of this amendment shall be given to the general public by depositing a copy in the Office of the Secretary of the Commission at Washington, D.C., and by filing a copy with the Director, Office of the Federal Register.

By the Commission, Railroad Service Board, members Joel E. Burns, Robert S. Turkington and John H. O'Brien.

Agatha L. Mergenovich,

Secretary.

[FR Doc. 80-19984 Filed 7-2-80; 8:45]

BILLING CODE 7035-01-M

DEPARTMENT OF THE INTERIOR

Fish and Wildlife Service

50 CFR Part 32

National Wildlife Refuges in North Dakota; Hunting

AGENCY: Fish and Wildlife Service, Interior.

ACTION: Special regulations.

SUMMARY: The Director has determined that the opening to hunting of certain National Wildlife Refuges is compatible with the objectives for which the areas were established, will utilize a renewable natural resource, and will provide additional recreational opportunity to the public. These special regulations describe the conditions under which hunting will be permitted on portions of certain National Wildlife Refuges in North Dakota.

EFFECTIVE DATES: August 1, 1980 through May 1, 1981.

FOR FURTHER INFORMATION CONTACT: The Area Manager or appropriate Refuge Manager at the address or telephone number listed below:

Gilbert E. Key, Area Manager, U.S. Fish and Wildlife Service, 1500 Capitol Avenue, Bismarck, North Dakota 58501, Telephone: (701) 255-4011, X-401.

John R. Foster, Refuge Manager, Arrowwood, Long Lake & Chase Lake, National Wildlife Refuges, Rural Route 1, Pingree, North Dakota 58476, Telephone: (701) 285-3341.

Ronald D. Shupe, Refuge Manager, Audubon and Lake Nettie National Wildlife Refuges, Rural Route 1, Coleharbor, North Dakota 58531, Telephone: (701) 442-5474.

John L. Venegoni, Refuge Manager, Des Lacs, Lostwood, White Lake and Lake Zahl National Wildife Refuges, P.O. Box 578, Kenmare, North Dakota 58746, Telephone: (701) 385-4046.

Lyle A. Stemmerman, Refuge Manager, Lake Alice National Wildlife Refuge, P.O. Box 908, Devils Lake, North Dakota 58301, Telephone: (701) 662-2924.

Darold T. Walls, Refuge Manager, J. Clark Salyer National Wildlife Refuge, Upham, North Dakota 58789, Telephone: (701) 768-2548.

David G. Potter, Refuge Manager, Tewaukon National Wildlife Refuge, Rural Route 1, Cayuga, North Dakota 58013, Telephone: (701) 724-3598.

Maurice B. Wright, Refuge Manager, Upper Souris National Wildlife Refuge, Rural Route 1, Foxholm, North Dakota 58738, Telephone: (701) 468-5468.

SUPPLEMENTARY INFORMATION: Merle O. Bennett (701) 255-4011, ext. 417 is the primary author of these special regulations.

General Conditions

Hunting on portions of the following refuges shall be in accordance with applicable State and Federal seasons and regulations, subject to additional special regulations and conditions as indicated. Portions of refuges which are open to hunting are designated by signs and/or delineated on maps. Special conditions applying to individual refuges and maps are available at refuge headquarters or from the Office of the Area Manager (addresses listed above).

The Refuge Recreation Act of 1962 (16 U.S.C. 460K) authorizes the Secretary of the Interior to administer such areas for public recreation as an appropriate incidental or secondary use only to the extent that it is practicable and not inconsistent with the primary objectives for which the areas were established. In addition, the Refuge Recreation Act requires that before any area of the refuge system is used for forms of recreation not directly related to the primary purposes and functions of the area, the Secretary must find that: (1) Such recreational use will not interfere with the primary purposes for which the area was established, and (2) funds are available for the development, operation, and maintenance of the permitted forms of recreation.

The recreational use authorized by these regulations will not interfere with the primary purposes for which these refuges were established. This determination is based upon consideration of, among other things, the Service's Final Environmental Statement on the operation of the National Wildlife Refuge System published in November 1976. Funds are available for the administration of the recreational activities permitted by these regulations.

§ 32.32 Special regulations: Big game hunting for individual wildlife refuge areas.

North Dakota

Arrowwood National Wildlife Refuge

Archery deer hunting and firearms deer hunting are permitted on designated areas of the refuge, in accordance with the following special conditions:

1. Archery deer hunting is closed from the day before the waterfowl hunting season until the day following the firearm deer season.

2. Special refuge hunting permits are required the first 2½ days of the firearm deer season.

3. Fox may be taken by deer license holders during the firearm deer season.

Chase Lake National Wildlife Refuge

Archery deer hunting and firearms deer hunting are permitted on the entire refuge, in accordance with the following special conditions:

1. Archery deer hunting is closed from the day before the waterfowl hunting season until the day following the firearms deer season.

Long Lake National Wildlife Refuge

Archery deer hunting and firearms deer hunting are permitted on designated areas of the refuge, in accordance with the following special conditions:

1. Archery deer hunting is closed from the day before the waterfowl hunting season until the day following the firearms deer season.

Slade Lake National Wildlife Refuge

Archery deer hunting and firearms deer hunting are permitted on designated areas of the refuge, in accordance with the following special conditions:

1. Archery deer hunting is closes from the day before waterfowl hunting season until the day following the firearms deer season.

Audubon National Wildlife Refuge

Archery deer hunting and firearms deer hunting are permitted on designated areas of the refuge, in accordance with the following special conditions:

1. Archery deer hunting is closed until the day following the firearms deer season.

2. Special refuge hunting permits are required the first 2½ days of the firearms deer season.

Lake Nettie National Wildlife Refuge

Archery deer hunting and firearms deer hunting are permitted on designated areas of the refuge, in accordance with the following special conditions:

1. Archery deer hunting is closed until the day following the firearms deer season.

Des Lacs National Wildlife Refuge

Firearms deer hunting is permitted on designated areas of the refuge.

Lostwood National Wildlife Refuge

Firearms deer hunting is permitted on designated areas of the refuge.

White Lake National Wildlife Refuge

Archery deer hunting is permitted on the entire refuge, in accordance with the following special condition:

1. Archery deer hunting is closed from the day before the waterfowl hunting season until the end of the State firearms deer season.

Lake Zahl National Wildlife Refuge

Archery deer hunting is permitted on designated areas of the refuge, in accordance with the following special conditions:

1. Archery deer hunting is closed from the day before the waterfowl hunting season until the day following the State firearms deer season.

J. Clark Salyer National Wildlife Refuge

Archery deer hunting and firearms deer hunting are permitted on the entire refuge, in accordance with the following special conditions:

1. Archery deer hunting is closed during the waterfowl hunting season on all portions of the refuge except that area south of the Upham-Willow City road.

2. Special refuge hunting permits are required the first 2½ days of the firearms hunting season.

Lake Alice National Wildlife Refuge

Archery deer hunting and firearms deer hunting are permitted on designated areas of the refuge, in accordance with the following special conditions:

1. Archery deer hunting is closed from the day before the waterfowl hunting season until the day following the State firearms deer season.

2. The special archery hunting unit, including access roads and parking areas, is closed to all entry during the waterfowl hunting season.

3. Firearms deer hunting is permitted only on the general public hunting unit.

Tewaukon National Wildlife Refuge

Archery deer hunting is permitted on designated areas of the refuge, in accordance with the following conditions:

1. Archery deer hunting is closed until the day following the State firearms deer season.

Upper Souris National Wildlife Refuge

Archery deer hunting and firearms deer hunting are permitted on the entire refuge, in accordance with the following special conditions:

1. Archery deer hunting is closed from the day before waterfowl hunting season until the day following the firearms deer season.

§ 32.12 Special regulations: Hunting of migratory game birds for individual wildlife refuge areas.

Lake Alice National Wildlife Refuge

Hunting of geese, ducks, coots and mergansers is permitted on designated areas of the refuge, in accordance with the following special conditions:

1. Waterfowl hunting is permitted only on the general public hunting unit.
2. Retrieval zones are designated between the hunting areas and the closed areas for the retrieval of dead or wounded game only. The use or possession of firearms within the retrieval zone is prohibited.

J. Clark Salyer National Wildlife Refuge

Hunting of geese, ducks, coots and mergansers is permitted on nine designated public hunting areas of the refuges.

§ 32.22 Special regulations: Hunting of upland game for individual wildlife refuge areas.

Arrowwood National Wildlife Refuge

Hunting of upland game birds is permitted on the refuge, in accordance with the following special conditions:

1. Pheasant, growse and partridge hunting is permitted on the entire refuge following the deer firearms season.

Lake Alice National Wildlife Refuge

Hunting of upland game birds is permitted on designated areas of the refuge, in accordance with the following special conditions:

1. Pheasant, grouse and partridge hunting is permitted only on the designated public hunting unit of the refuge.
2. Pheasant hunting will be permitted only during the State early pheasant hunting season.

J. Clark Salyer National Wildlife Refuge

Hunting of upland game birds is permitted on designated areas of the refuge, in accordance with the following special conditions:

1. Nine designated public hunting areas are open to the hunting of all game birds during the regular State seasons.
2. In addition, grouse and partridge hunting is permitted on that portion of the refuge south of the Upham-Willow City road during the entire State season.
3. Pheasant, grouse and partridge hunting is permitted on the entire refuge following the deer firearms season.

Lostwood National Wildlife Refuge

Hunting of upland game birds is permitted on designated areas of the refuge, in accordance with the following special conditions:

1. Hunting of grouse and partridge is closed on that portion of the refuge south of Highway 50 during the deer firearms season.
2. Grouse and partridge hunting is permitted north of Highway 50, only following the close of the deer firearms season.
3. The refuge is closed to the hunting of pheasants.

Dated: June 26, 1980.

M. S. Zschomler,

Acting Area Manager, Bismarck, North Dakota.

[FR Doc. 80-19949 Filed 7-2-80; 8:45 am]
BILLING CODE 4310-55-M

DEPARTMENT OF COMMERCE

National Oceanic and Atmospheric Administration

50 CFR Parts 611 and 656

Atlantic Mackerel Fishery

AGENCY: National Oceanic and Atmospheric Administration (NOAA)/Commerce.

ACTION: Promulgation of final regulations.

SUMMARY: These regulations make final the proposed regulations implementing Amendment No. 1 (amendment) to the Fishery Management Plan for Atlantic Mackerel (FMP).

The FMP for the mackerel fishery of the Northwest Atlantic provides for the conservation and management of Atlantic mackerel. The regulations implementing the FMP, and this amendment, control fishing by foreign and domestic vessels within the United States fishery conservation zone.

The amendment to the FMP: (1) Establishes a new optimum yield (OY); (2) increases the domestic annual harvest estimate (DAH); (3) increases the total allowable level of foreign fishing (TALFF); (4) eliminates the allocation of DAH between commercial and recreational fisheries; and (5) establishes a reserve for in-season allocation to TALFF.

All regulations governing foreign fishing for mackerel contained in 50 CFR Part 611 are continued in effect without change. These regulations also (1) implement the April 1, 1980–March 31, 1981 fishing year established by the amendment, (2) continue mandatory reporting for vessel operators and dealers/processors, and (3) continue the permit system instituted under the FMP.

EFFECTIVE DATE: June 30, 1980.

FOR FURTHER INFORMATION CONTACT: Mr. Allen E. Peterson, Jr., Regional Director, Northeast Region, National Marine Fisheries Service, 14 Elm Street, Gloucester, Massachusetts 01930—Telephone (617) 281-3600.

SUPPLEMENTARY INFORMATION: The FMP was prepared by the Mid-Atlantic Fishery Management Council (Council) and approved by the Assistant Administrator for Fisheries, NOAA (Assistant Administrator) on July 3, 1979, in accordance with the Fishery Conservation and Management Act of 1976, as amended. Final regulations implementing the management measures contained in the FMP were published on February 21, 1980 (45 FR 11497). Those regulations established annual harvest levels on a fishing year basis (April 1–March 31) for both domestic and foreign fishing vessels harvesting Atlantic mackerel (*Scomber scombrus*), as well as a mechanism for making in-season reallocations of mackerel between the domestic commercial and recreational fisheries. The FMP was to expire on April 1, 1980.

On March 17, 1980, the Assistant Administrator partially approved Amendment #1 to the FMP. The amendment, notice of proposed rulemaking, and request for comments were published in the Federal Register on April 3, 1980 (45 FR 22144). The proposed regulations were also implemented on an emergency basis on April 1, 1980 (45 FR 21256) for a 45-day period and were extended for an additional 45-day period on May 15, 1980 (45 FR 32002). They expire on June 30, 1980.

A summary of the changes made to the FMP by this amendment follows:

New Optimum Yield

The 1979 assessment indicated a significant increase in the Atlantic mackerel total stock size from about 515,000 mt in 1978 to about 631,000 mt in 1979. An abundant 1978 year class is primarily responsible for this increase and the result should be a significant increase in spawning stock size in 1980. The maximum sustainable yield for Atlantic mackerel is estimated at 210,000 mt to 230,000 mt. The Council raised the OY for the 1980–81 fishing year to 30,000 mt, a conservative level which will permit further stock rebuilding.

Increase in DAH

The Council expects domestic recreational catches to rise with the increased abundance of mackerel. Insufficient information is available to estimate adequately the impact of increased stock abundance on the domestic commercial harvest. DAH is increased to 20,000 mt in anticipation of fishery growth reflecting the mackerel stock increase.

Elimination of the allocation of DAH between commercial and recreational fisheries

The original FMP established a DAH of 14,000 mt. At this level of allowable removals, it was considered prudent to allocate 9,000 mt to recreational fishermen and 5,000 mt to commercial fishermen to help ensure historic division of the catch. With the increase of DAH to 20,000 mt, and the availability of a reserve, the Council considered it unnecessary to maintain this distinction.

Reserve and TALFF

The Council's uncertainty as to the exact harvesting capacities of the domestic recreational and commercial fisheries resulted in the establishment of a reserve of 6,000 mt of mackerel. The reserve is first available to domestic fishermen but will be made available to TALFF if it is ascertained that domestic fishermen will not harvest it. The TALFF if 4,000 mt, the difference between OY and DAH plus the reserve. The increase in TALFF should allow foreign vessels to conduct their directed fisheries for squid and hake, despite an increased incidental take of mackerel.

The Assistant Administrator disapproved the Council's mechanism for allocation of reserve to TALFF (45 FR 22144) and the Mid-Atlantic Council was given 45 days to respond to this decision. Regulations will be proposed in the near future to implement an allocation procedure (§ 656.22).

Public Comments

Three letters were received commenting on the proposed rulemaking. A summary of the comments and NOAA's response appear below, along with other revisions made as the result of internal agency review of the proposed rulemaking.

§ 656.1 Purpose and Scope.

One commenter questioned the legality of the management unit's extension beyond the confines of the Mid-Atlantic area, since the FMP had not been approved officially by the New England or South Atlantic Councils. Although the FMP was developed by the Mid-Atlantic Council, there was direct consultation with, and contribution from, the New England and South Atlantic Councils. Public hearings were held in these geographic areas and significant comments were received. Specific documentation appears in the Environmental Impact Statement (EIS) for the initial FMP. Since the Mid-Atlantic Council has been designated to prepare the FMP for this species, the FCMA does not require formal approval by other Councils even though the management unit may extend into their geographic areas of authority. However, since Atlantic mackerel are not indigenous to the Gulf of Mexico, and since there was no intent to include the Gulf in the fishery management unit, the description of the unit has been changed to read: * * * *that portion of the Northwest Atlantic Ocean over which the United States exercises exclusive management authority, excluding the Gulf of Mexico.*

§ 656.2 Definitions.

The U.S. Coast Guard suggested a new definition for "Vessel of the United States," to include vessels over five net tons which had no U.S. documentation but had a number issued under the National Coordinated Boating Safety Program. NOAA's proposed definition, which is also used in the foreign fishing regulations and in regulations implementing many FMPs, prevents foreign vessels over five net tons from qualifying as a U.S. vessel by obtaining a Boating Safety number from a State. The current definition provides a better expression of the Act's distinction between U.S. and foreign fishing vessels; therefore no change has been made. NOAA is considering other means to deal with the problem raised by the Coast Guard of domestic vessels over five net tons which, for technical reasons, may be ineligible for U.S. documentation.

§ 656.5 Recordkeeping and Reporting.

Two commenters stated that the Act does not authorize the requirement that fish dealers and processors report information relative to first purchases (§ 656.5(b)). The Act authorizes the establishment of mandatory dealer and processor reporting under Sections 303(a)(5) and 303(b)(7). NOAA has determined that such reporting measures are necessary and appropriate for the management of the Atlantic mackerel fishery.

One commenter stated that the record inspection provisions of § 656.5(b) expanded the scope of the information subject to inspection and broadened the scope of the locations where records could be inspected. That proposed paragraph (§ 656.5(b)(4)) has been reserved and will be reproposed after NOAA has completed its processor-reporting system and has determined its data needs with greater specificity. Another reserved paragraph, § 656.5(b)(2) on processing capacity, will be proposed at that time.

FMP Approval

The Assistant Administrator has reviewed the comments received on Amendment No. 1 to the Atlantic Mackerel FMP and finds that the amendment is consistent with the National Standards, other provisions of the Act and other applicable law.

Environmental Impact

Development and implementation of Amendment No. 1 to the FMP has been deemed a major Federal action significantly affecting the quality of the human environment. Under provisions of the National Environmental Policy Act of 1969, a supplement to the final environmental impact statement has been prepared and a notice of availability was published on June 2, 1980 (45 FR 37275).

Executive Order 12044

On March 17, 1980, the Administrator determined that this action was not significant with respect to Executive Order 12044. No regulatory analysis was prepared.

Administrative Procedures Act

The Assistant Administrator has determined that the 30-day "cooling" period required under the Administrative Procedures Act should be waived so that these regulations may become effective on or before June 30, 1980. A delay in implementation would result in a regulatory hiatus affecting both domestic and foreign fishing and could affect conservation efforts.

Signed at Washington, D.C., this 30th day of June 1980.

Winfred H. Meibohm,

Executive Director, National Marine Fisheries Service.

(16 U.S.C. 1801, et seq.)

50 CFR is revised as follows:

PART 611—FOREIGN FISHING

§ 611.20 (Appendix 1) [Revised]

1. 50 CFR 611.20, Appendix 1, is revised to read as follows:

	Species	Species code	Area	OY	DAH	JVP	Reserve	TALFF
1. Northwest Atlantic Ocean fisheries.								
* * *			*	*	*	*	*	
B. Mackerel fisheries of the Northwest Atlantic.	Atlantic mackerel	204		30,000	20,000		6,000	4,000
* * *			*	*	*	*	*	

2. 50 CFR Part 656 is revised to read as follows:

PART 656—ATLANTIC MACKEREL FISHERY

Subpart A—General Provisions

Sec.
656.1 Purpose and scope.
656.2 Definitions.
656.3 Relation to other laws.
656.4 Vessel permits and fees.
656.5 Recordkeeping and reporting requirements.
656.6 Vessel identification.
656.7 Prohibitions.
656.8 Enforcement.
656.9 Penalties.

Subpart B—Management Measures

656.20 Fishing year.
656.21 Allowable levels of harvest.
656.22 Allocation.
656.23 Closure of fishery.
656.24 Area/time restrictions. [Reserved]
656.25 Gear/vessel equipment restrictions. [Reserved]
656.26 Effort restrictions. [Reserved]

Authority: 16 U.S.C. 1801 *et seq.*

Subpart A—General Provisions

§ 656.1 Purpose and scope.

(a) The regulations in this part: (1) Implement the Fishery Management Plan for the Mackerel Fishery of the Northwest Atlantic Ocean, which was prepared and adopted by the Mid-Atlantic Fishery Management Council and approved by the Assistant Administrator; and (2) govern fishing for Atlantic mackerel by fishing vessels of the United States within that portion of the Northwest Atlantic Ocean over which the United States exercises exclusive fishery management authority, excluding the Gulf of Mexico.

(b) The regulations governing fishing for Atlantic mackerel by foreign vessels in the fishery conservation zone are contained in 50 CFR Part 611. Appendix I to 50 CFR 611.20 contains the TALFF for Atlantic mackerel.

§ 656.2 Definitions.

In addition to the definitions in the Act, the terms used in this part shall have the following meanings:

Act means the Fishery Conservation and Management Act of 1976, as amended, 16 U.S.C. 1801 *et seq.*

Assistant Administrator means the Assistant Administrator for Fisheries of the National Oceanic and Atmospheric Administration, Department of Commerce, or an individual to whom appropriate authority has been delegated.

Atlantic mackerel or *mackerel* means the species *Scomber scombrus* ranging from Labrador to North Carolina.

Authorized Officer means:

(a) Any commissioned, warrant, or petty officer of the U.S. Coast Guard;

(b) Any certified enforcement officer or special agent of the National Marine Fisheries Services;

(c) Any officer designated by the head of any Federal or State agency which has entered into an agreement with the Secretary of Commerce and the Commandant of the U.S. Coast Guard to enforce the provisions of the Act; or

(d) Any U.S. Coast Guard personnel accompanying and acting under the direction of any person described in paragraph (a) of this definition.

Catch, take, or harvest includes, but is not limited to, any activity which results in mortality to any mackerel or in bringing any mackerel on board a vessel.

Charter or party boat means any vessel which carries passengers for hire to engage in fishing.

Fishery Conservation Zone (FCZ) means that area adjacent to the United States which, except where modified to accommodate international boundaries, encompasses all waters from the seaward boundary of each of the coastal States to a line on which each point is 200 nautical miles from the baseline from which the territorial sea of the United States is measured.

Fishery Management Plan (FMP) means the Fishery Management Plan for the Mackerel Fishery of the Northwest Atlantic Ocean, and any amendments thereto.

Fishing includes any activity, other than scientific research activity conducted by a scientific research vessel, which involves:

(a) The catching, taking, or harvesting of mackerel;

(b) The attempted catching, taking, or harvesting of mackerel;

(c) Any other activity which can reasonably be expected to result in the catching, taking, or harvesting of mackerel; or

(d) Any operations at sea in support of, or in preparation for, any activity described in paragraph (a), (b) or (c) of this definition.

Fishing trip means a period of time during which fishing is conducted, beginning when the vessel leaves port and ending when the vessel returns to port.

Fishing vessel means any vessel, boat, ship, or other craft which is used for, equipped to be used for, or of a type which is normally used for: (a) Fishing; or (b) aiding or assisting one or more vessels at sea in the performance of any activity relating to fishing, including but not limited to, preparation, supply, storage, refrigeration, transportation, or processing.

Fishing week means the weekly period beginning 0001 hours Sunday and ending 2400 hours Saturday.

Operator, with respect to any fishing vessel, means the master or other individual on board and in charge of that vessel.

Owner, with respect to any fishing vessel, means:

(a) Any person who owns that vessel in whole or in part;

(b) Any charterer of the vessel, whether bareboat, time or voyage;

(c) Any person who acts in the capacity of a charterer, including but not limited to parties to a management agreement, operating agreement, or any similar agreement that bestows control over the destination, function, or operation of the vessel; or

(d) Any agent designated as such by a person described in paragraph (a), (b) or (c) of this definition.

Person means any individual (whether or not a citizen or national of the United States), corporation, partnership, association, or other entity (whether or not organized or existing under the laws of any State), and any Federal, State, local, or foreign government or any entity of any such government.

Person who receives Atlantic mackerel for a commercial purpose means any person (excluding governments and governmental entities) engaged in commerce who is the first purchaser of mackerel. The term includes, but is not limited to, dealers, brokers, processors, cooperatives, or fish exchanges. It does not include a person who only transports mackerel between a fishing vessel and a first purchaser.

Regional Director means the Regional Director, Northeast Region, National Marine Fisheries Service, Federal Building, 14 Elm Street, Gloucester, Massachusetts 01930; or a designee.

Regulated species means any species for which fishing by a vessel of the United States is regulated pursuant to the Act.

United States harvested mackerel means mackerel caught, taken, or harvested by vessels of the United States under this part, whether or not

such mackerel is landed in the United States.

Vessel of the United States means:

(a) Any vessel documented or numbered by the United States Coast Guard under United States law; or

(b) Any vessel under five net tons which is registered under the laws of any State.

§ 656.3 Relation to other laws.

(a) Persons affected by these regulations should be aware that other Federal and State statutes and regulations may apply to their activities.

(b) All fishing activity, regardless of species sought, is prohibited pursuant to 15 CFR Part 924, on the *U.S.S. Monitor* Marine Sanctuary, which is located approximately 15 miles southwest of Cape Hatteras off the coast of North Carolina (35°00'23"N., 75°24'32"W.).

§ 656.4 Vessel permits and fees.

(a) *General.* Every fishing vessel which fishes for Atlantic mackerel under this Part must have a fishing permit issued under this section. Vessels are exempt from this requirement if they catch no more than 100 pounds of mackerel per trip.

(b) *Eligibility.* [Reserved]

(c) *Application.* (1) An application for a fishing permit under this part must be submitted and signed by the owner or operator of the vessel on an appropriate form obtained from the Regional Director. The application must be submitted to the Regional Director at least 30 days prior to the date on which the applicant desires to have the permit made effective.

(2) Applicants shall provide all the following information:

(i) The name, mailing address including ZIP code, and telephone number of the owner of the vessel;

(ii) The name of the vessel;

(iii) The vessel's United States Coast Guard documentation number, or the vessel's State registration number for vessels not required to be documented under provisions of Title 46 of the United States Code;

(iv) The home port or principal port of landing, gross tonnage, radio call sign, and length of the vessel;

(v) The engine horsepower of the vessel and year the vessel was built;

(vi) The type of construction, type of propulsion, and type of echo sounder of the vessel;

(vii) The permit number of any current or previous Federal fishery permit issued to the vessel;

(viii) The approximate fish hold capacity of the vessel;

(ix) The type and quantity of fishing gear used by the vessel;

(x) The average size of the crew, which may be stated in terms of a normal range; and

(xi) Any other information concerning vessel and gear characteristics requested by the Regional Director.

(3) Any change in the information specified in paragraph (c)(2) of this section shall be submitted in writing to the Regional Director by the owner within 15 days of any such change.

(d) *Fees.* No fee is required for any permit issued under this Part.

(e) *Issuance.* The Regional Director shall issue a permit to the applicant not later than 30 days from the receipt of a completed application.

(f) *Expiration.* A permit shall expire upon any change in vessel ownership, registration, name, length, gross tonnage, fish hold capacity, home port or the regulated fisheries in which the vessel is engaged.

(g) *Duration.* A permit shall continue in effect until it expires or is revoked, suspended, or modified pursuant to 50 CFR Part 621.

(h) *Alteration.* No person shall alter, erase, or mutilate any permit. Any permit which has been intentionally altered, erased, or mutilated is invalid.

(i) *Replacement.* Replacement permits may be issued by the Regional Director when requested in writing by the owner or operator stating the need for replacement, the name of the vessel, and the fishing permit number assigned. An application for a replacement permit shall not be considered a new application.

(j) *Transfer.* A permit issued under this Part is not transferable or assignable. A permit shall be valid only for the fishing vessel and owner for which it is issued.

(k) *Display.* A permit issued under this Part must be carried on board the fishing vessel at all times. The operator of a fishing vessel shall present the permit for inspection upon request of any Authorized Officer.

(l) *Sanctions.* Subpart D of 50 CFR Part 621 (Civil Procedures) governs the imposition of sanctions against a permit issued under this part. As specified in that Subpart D, a permit may be revoked, modified, or suspended if the permitted fishing vessel is used in the commission of an offense prohibited by the Act or these regulations, or if a civil penalty or criminal fine imposed under the Act is not paid.

§ 656.5 Recordkeeping and reporting requirements.

(a) *Fishing vessel records.* (1) The operator of any fishing vessel issued a permit to fish for mackerel under this part shall:

(i) Maintain on board the vessel an accurate and complete fishing vessel record on forms supplied by the Regional Director;

(ii) Make the fishing vessel record available for inspection or reproduction by an Authorized Officer at any time during or after a fishing trip;

(iii) Keep each fishing vessel record for one year after the date of the last entry in the fishing vessel record; and

(iv) Submit fishing vessel records, as specified in § 656.5(a)(2).

(2) The owner or operator of any fishing vessel conducting any fishing operation subject to this part shall:

(i) Submit a complete fishing vessel record to a location designated by the Regional Director 48 hours after the end of any fishing week or fishing trip (whichever time period is longer) during which any regulated species were taken; or

(ii) Submit a statement to a location designated by the Regional Director 48 hours after the end of any calendar week within which no fishing for any regulated species occurred.

(3) Fishing vessel records shall contain information on a daily basis for the entirety of any trip during which mackerel or any other regulated species are caught. The information shall include dates of fishing, type and size of gear used, areas fished, duration of fishing time, time period of tow or gear set, and the estimated weight of each species taken.

(4) A request for exemption from the provisions of paragraph (a)(2)(ii) of this section shall be submitted in writing to the Regional Director. Such request shall state the reason for the request and the period of time for which the exemption is to apply. The Regional Director may issue an exemption for a period of time greater than two months and less than ten months. If an exemption is issued, the Regional Director must be notified in writing of the operator's intent to resume fishing before fishing may be resumed.

(5) The Assistant Administrator may revoke, modify, or suspend the permit of a fishing vessel whose owner or operator falsifies or fails to submit the records and reports prescribed by this section, in accordance with the provisions of 50 CFR Part 621.

(b) *Fish dealer or processor reports.* (1) Any person who receives Atlantic mackerel for a commercial purpose from a fishing vessel subject to this part shall file a weekly report (Sunday through Saturday) within 48 hours of the end of the week in which mackerel is received. This report shall include information on all first purchases of mackerel and all other fish made during the week. Such

information shall include date of transaction, name of the vessel from which mackerel was received, and the amount and price paid for mackerel and all other fish received.

(2) Domestic mackerel processing capacity. [Reserved]

(3) Reports required by § 656.5(b) shall be made on forms supplied by the Regional Director and submitted to a location designated by him.

(4) Inspection of records. [Reserved]

§ 656.6 Vessel identification.

(a) *Official Number.* Each fishing vessel subject to this part and over 25 feet in length shall display its Official Number on the port and starboard sides of the deckhouse or hull and on an appropriate weather deck so as to be clearly visible from enforcement vessels and aircraft. The Official Number is the documentation number issued by the U.S. Coast Guard for documented vessels or the registration number issued by a State or the U.S. Coast Guard for undocumented vessels.

(b) *Numerals.* (1) The Official Number shall be at least 18 inches in height for fishing vessels over 65 feet in length and at least 10 inches in height for all other vessels over 25 feet in length.

(2) The Official Number shall be permanently affixed to or painted on the vessel and shall be block Arabic numerals in contrasting color. However, charter or party boats may use nonpermanent markings to display the Official Number whenever the vessel is fishing for mackerel.

(c) *Vessel length.* The length of a vessel, for purposes of this section, is that length set forth in U.S. Coast Guard or State records.

(d) *Duties of operator.* The operator of each fishing vessel shall:

(1) Keep the Official Number clearly legible and in good repair, and

(2) Ensure that no part of the fishing vessel, its rigging, or its fishing gear obstructs the view of the Official Number from an enforcement vessel or aircraft.

§ 656.7 Prohibitions.

It is unlawful for any person to:

(a) Use any vessel for the taking, catching, harvesting, or landing of any Atlantic mackerel (except as provided for in § 656.4(a)), unless the vessel has a valid permit issued pursuant to this part, on board the vessel;

(b) Fail to report to the Regional Director within 15 days any change in the information contained in the permit application for a vessel;

(c) Falsify or fail to make, keep, maintain, or submit any fishing vessel record or fish dealer or processor report, or other record or report required by this part;

(d) Make any false statement, oral or written, to an Authorized Officer, concerning the taking, catching, landing, purchase, sale, or transfer of any mackerel;

(e) Fail to affix and maintain vessel markings as required by § 656.6 of this part;

(f) Possess, have custody or control of, ship, transport, offer for sale, sell, purchase, import, export, or land any Atlantic mackerel taken in violation of the Act, this part, or any regulation promulgated under the Act;

(g) Fish for, take, catch, or harvest any Atlantic mackerel from the FCZ after the fishery has been closed pursuant to § 656.23;

(h) Transfer directly or indirectly, or attempt to so transfer, any United States harvested mackerel to any foreign fishing vessel, which such vessel is within the FCZ, unless the foreign fishing vessel has been issued a permit under section 204 of the Act, which authorizes the receipt by such vessel of the United States harvested mackerel;

(i) Refuse to permit an Authorized Officer to inspect any fishing vessel record;

(j) Refuse to permit an Authorized Officer to board a fishing vessel subject to such person's control for purposes of conducting any search or inspection in connection with the enforcement of this Act, this part, or any other regulation promulgated under the Act;

(k) Fail to comply immediately with enforcement and boarding procedures specified in § 656.8;

(l) Forcibly assault, resist, oppose, impede, intimidate, threaten or interfere with an Authorized Officer in the conduct of any search or inspection under the Act;

(m) Resist a lawful arrest for any act prohibited by this part;

(n) Interfere with, obstruct, delay, or prevent by any means the apprehension or arrest of another person knowing that such other person has committed any act prohibited by this part;

(o) Interfere with, obstruct, delay, or prevent by any means the lawful investigation or search in the process of enforcing this part; or

(p) Violate any other provision of this part, the Act, or any regulation promulgated pursuant thereto.

§ 656.8 Enforcement.

(a) *General.* The operator of any fishing vessel subject to this part shall immediately comply with instructions issued by an Authorized Officer to facilitate safe boarding and inspection of the vessel, its gear, equipment, fishing record, and catch for purposes of enforcing the Act and this part.

(b) *Signals.* Upon being approached by a U.S. Coast Guard vessel or aircraft, or other vessel or aircraft authorized to enforce the Act, the operator of the fishing vessel shall be alert for communications conveying enforcement instructions. VHF-FM radiotelephone is the normal method os communication between vessels. Should radiotelephone communications fail, however, other methods of communication, including visual signals, may be employed. The following signals extracted from the International Code of Signals are among those which may be used, and are included here for the safety and information of fishing vessel operators:

(1) "L" means "You should stop your vessel instantly;"

(2) "SQ3" means "You should stop or heave to; I am going to board you;" and

(3) "AA AA AA etc.," which is the call to an unknown station, to which the signaled vessel shall respond by illuminating the vessel's Official Number required by § 656.6.

(c) *Boarding.* A vessel signaled to stop or heave to for boarding shall:

(1) Stop immediately and lay to or maneuver in such a way as to permit the Authorized Officer and his/her party to come aboard.

(2) Provide a safe ladder for the Authorized Officer and his/her party;

(3) When necessary to facilitate the boarding and/or when requested by an Authorized Officer, provide a man rope, safety line and illumination for the ladder; and

(4) Take such other actions as necessary to insure the safety of the Authorized Officer and his/her party to facilitate the boarding.

§ 656.9 Penalties.

Any person or fishing vessel found to be in violation of this part will be subject to the civil and criminal penalty provisions and forfeiture provisions prescribed in the Act, and to 50 CFR Part 620 (Citations) and Part 621 (Civil Procedures).

Subpart B—Management Measures

§ 656.20 Fishing year.

The fishing year for Atlantic mackerel is the 12-month period beginning April 1 and ending on March 31 of the following year.

§ 656.21 Allowable levels of harvest.

(a) *Harvest levels.* The allowed level of harvest of Atlantic mackerel on a fishing year basis is 30,000 metric tons (mt). The initial level of harvest by vessels of the United States is 20,000 mt.

(b) *Reserve.* A reserve of 6,000 mt is available for adjustments to the initial level of foreign fishing if it is ascertained that domestic fishermen will not harvest it.

(c) *Territorial waters.* These regulations do not restrict harvests of Atlantic mackerel in the waters landward of the FCZ. Harvests from these waters, however, shall be subtracted from the annual domestic level of harvest set forth in paragraph (a) of this section.

§ 656.22 Allocation. [Reserved]

§ 656.23 Closure of fishery.

(a) *General.* The Regional Director shall periodically monitor catches and landings of Atlantic mackerel.

(b) *Decision to close.* The Assistant Administrator shall close the domestic fishery when it has harvested 80 percent of the total of the initial level of domestic harvest plus the part of the reserve which has not been allocated to TALFF, if he finds that this action is necessary to prevent the allowed level of domestic harvest from being exceeded.

(c) *Notice of closure.* If the Assistant Administrator determines that a closure of the domestic fishery for mackerel is necessary, the Assistant Administrator shall:

(1) Notify in advance the Executive Directors of the Mid-Atlantic, New England, and South Atlantic Fishery Management Councils of the closure;

(2) Mail notifications to all holders of permits issued under § 656.5 of the closure at least 72 hours prior to the effective date of the closure; and

(3) Publish a notice of closure in the Federal Register.

(d) *Incidental catch.* During a period of closure, fishing vessels may catch, take, or harvest Atlantic mackerel incidental to fishing for other species of fish: *Provided,* That the amount of Atlantic mackerel constitutes no more than 10 percent by weight of the total catch of all other fish on board the vessel at the end of any fishing trip.

§ 656.24 Area/time restrictions. [Reserved]

§ 656.25 Gear/vessel equipment restrictions. [Reserved]

§ 656.26 Effort restrictions. [Reserved]

[FR Doc. 80-20060 Filed 6-30-80; 3:52 pm]
BILLING CODE 3510-22-M

50 CFR Parts 611 and 655

Atlantic Squid Fishery

AGENCY: National Oceanic and Atmospheric Administration (NOAA)/ Commerce.

ACTION: Promulgation of final regulations.

SUMMARY: These regulations make final the proposed regulations implementing Amendment #1 (amendment) to the Fishery Management Plan for the Atlantic Squid Fishery (FMP).

The amendment to the FMP: (1) Extends the FMP indefinitely; (2) maintains optimum yield (OY) levels; (3) reduces the domestic annual harvest (DAH) estimate; (4) reduces total allowable level of foreign fishing (TALFF); and (5) establishes a reserve for in-season allocation to TALFF.

All regulations governing foreign fishing for squid contained in 50 CFR Part 611 are continued in effect without change.

The FMP for the squid fishery of the Northwest Atlantic provides for the conservation and managment of two species of Atlantic squid (*Illex illecebrosus* and *Loligo pealei*). The regulations implementing the FMP, and this amendment, control fishing by foreign and domestic vessels within the United States fishery conservation zone.

EFFECTIVE DATE: June 30, 1980.

FOR FURTHER INFORMATION CONTACT: Allen E. Peterson, Jr., Regional Director, Northeast Region, National Marine Fisheries Service, 14 Elm Street, Gloucester, Massachusetts 09130, Telephone (617) 281-3600.

SUPPLEMENTARY INFORMATION: The FMP was prepared by the Mid-Atlantic Fishery Management Council (Council) and approved on June 6, 1979, by the Assistant Administrator for Fisheries, NOAA (Assistant Administrator), in accordance with the Fishery Conservation and Management Act of 1976, as amended (Act). The FMP was implemented with final regulations on December 31, 1979 (44 FR 77174). Those regulations established annual harvest levels on a fishing year basis (April 1–March 31) for both domestic and foreign fishing vessels harvesting short-finned squid (*Illex illecebrosus*) and long-finned squid (*Loligo pealei*) in the Northwest Atlantic, as well as a mechanism for making in-season reallocations of squid from DAH to TALFF. It also provided for a fishing permit and record-keeping system. The FMP was to expire on March 31, 1980.

On March 19, 1980, the Assistant Administrator partially approved Amendment #1 to the FMP. The amendment, notice of proposed rulemaking, and request for comments were published in the Federal Register on April 3, 1980 (45 FR 22121). The proposed regulations also were implemented on an emergency basis on April 1, 1980. The emergency regulations were extended once and will expire on June 30, 1980.

A summary of the changes made to the FMP by this amendment follows:

Extend FMP Indefinitely

The Council has attempted to provide for continuing management and conservation of the Atlantic squid stocks by extending the FMP indefinitely. This will provide an opportunity to update the FMP through amendment, consistent with changes in stock abundance and other factors, as needed, rather than by promulgating new FMPs annually.

Maintain OY

Based on the 1979 squid stock assessment, the Council has determined that the OY for *Illex* should be maintained at 30,000 mt and the OY for *Loligo* should be maintained at 44,000 mt. The OY for *Loligo* is equal to the maximum sustainable yield (MSY). The OY for *Illex* is 10,000 mt less than the MSY because scientific information for *Illex* is much less complete than for *Lologo.*

Reduce DAH

The Council set DAH at 5,000 mt for *Illex* and 7,000 mt for *Loligo.* These levels of DAH take into account not only past performance of U.S. fishermen in this fishery, but also changes in traditional fishing patterns and practices which the Council anticipates will take place. Because of the uncertainties, the Council feels that most reasonable approach is to set DAH as realistically as possible and to establish a reserve for potential growth in the domestic fishery.

Reduce TALFF

With creation of a reserve, the Council reduced the TALFF for *Illex* from 20,000 mt to 12,000 mt and the TALFF for *Loligo* from 30,000 mt to 18,000 mt. The Council realized this may adversely impact foreign fishing. Foreign nations will be allocated squid from the reserve, which would result in an increase in TALFF, to the extent that the domestic fisheries do not use the reserve.

Establish a Reserve

A reserve of 13,000 mt for *Illex* and 19,000 mt for *Loligo* was established to

provide an opportunity for expansion of the domestic fishery, and in recognition of the uncertainty concerning the exact harvesting capacity of the domestic fleet. The reserve is available to domestic fishermen, but will be allocated to TALFF if it is determined that domestic fishermen will not harvest it. These quotas are also depicted in the table below with the previous year shown for comparison:

Table 1—The 1979–80 and 1980–81 Fishing Year Quotas for Atlantic Squid (in metric tons)

	Illex		Loligo	
	1979–80	1980–81	1979–80	1980–81
OY	30,000	30,000	44,000	44,000
DAH	10,000	5,000	14,000	7,000
TALFF	20,000	12,000	30,000	18,000
Reserve		13,000		19,000

Public Comments

Four letters were received commenting on the proposed rulemaking. A summary of these comments and NOAA's responses appear below, along with revisions made as a result of internal agency review. The comments, responses, and changes are discussed on a section-by-section basis. Many of the changes made in the text are editorial or clarifying.

§ 655.2 Definitions.

The U.S. Coast Guard suggested a new definition for "vessel of the United States," to include vessels over five net tons which had no U.S. documentation but had a number issued under the National Coordinated Boating Safety Program. NOAA's proposed definition, which is also used in the foreign fishing regulations and in regulations implementing many FMPs, prevents foreign vessels over five net tons from qualifying as a U.S. vessel by obtaining a Boating Safety number from a State. The current definition provides a better expression of the Act's distinction between U.S. and foreign fishing vessels; therefore no change has been made. NOAA is considering other means to deal with the problem raised by the Coast Guard of domestic vessels over five net tons which, for technical reasons, may be ineligible for U.S. documentation.

§ 655.5 Recordkeeping and reporting.

Two commenters stated that the Act did not authorize the requirement that fish dealers and processors report information relative to first transactions (§ 655.5(b)). The Act authorizes the establishment of mandatory dealer and processor reporting under Sections 303(a)(5) and 303(b)(7). NOAA has determined that such reporting measures are necessary and appropriate for the management of the Atlantic squid fishery.

One commenter stated that the record inspection provisions of § 655.5(b) expanded the scope of the information subject to inspection and broadened the scope of the location(s) where records could be inspected. That proposed paragraph (§ 655.5(b)(4)) has been reserved and will be reproposed after NOAA has completed its processor-reporting system and has determined its data needs with greater specificity. Another reserved paragraph, § 655.5(b)(2) on processing capacity, will be proposed at that time.

§ 655.21 Allowable levels of harvest.

One commenter felt that setting an OY for *Illex* of 30,000 mt while MSY is 40,000 mt is inappropriate and OY should be set at 40,000 mt. Because knowledge concerning the biology and life history of *Illex* and the importance of *Illex* in overall ecological cycles is incomplete, the Council's conservative approach to specification of catch levels for this species is consistent with the stated purpose of the Act to "conserve and manage the fishery resources off the coasts of the United States" (Section 2(b)(1)). Such an approach will also ensure that overfishing does not take place, a requirement of Section 301(a)(1) of the Act.

Two commenters opposed the use of a reserve from which a portion of the annual quota may be allocated to TALFF. Furthermore, they feel the amount of OY apportioned to reserve is arbitrarily high. The Council has projected an expansion of the domestic fishery for *Illex* and *Loligo*, and has established the reserve as an appropriate means to accommodate that expansion if it materializes. If the domestic fishery does not expand, the reserve will be allocated in-season to TALFF.

§ 655.22 Allocation.

Section 655.22, on allocations from the reserve to TALFF, is reserved and will be proposed as soon as the Assistant Administrator approves an allocation mechanism. The rulemaking is expected to be completed in time to make appropriate allocations to TALFF during the 1980–81 fishing season.

FMP Approval

The Assistant Administrator for Fisheries, NOAA, has reviewed the comments received on Amendment #1 to the FMP and finds that the amendment is consistent with the National Standards, other provisions of the Act, and other applicable law.

Environmental Impact

Development and implementation of Amendment #1 to the FMP has been deemed a major federal action significantly affecting the quality of the human environment. Under provisions of the National Environmental Policy Act of 1969, a supplement to the final environmental impact statement has been prepared and a notice of availability was published on June 2, 1980 (45 FR 37275).

Executive Order 12044

Implementation of these regulations has not been deemed a significant regulatory action under provisions of NOAA Directives Manual, Chapters 21–24, which implements Executive Order 12044 (Improving Government Regulations). Consequently, a draft regulatory analysis was not prepared.

Administrative Procedures Act

The Assistant Administrator has determined that the 30-day "cooling off" period required under the Administrative Procedures Act should be waived so that these regulations may become effective on or before June 30, 1980. A delay in implementation would result in a regulatory hiatus affecting both domestic and foreign fishing and could affect conservation efforts.

Signed at Washington, D.C., this 30th day of June 1980.

(16 U.S.C. 1801 *et seq.*)

Winfred H. Meibohm,

Executive Director, National Marine Fisheries Service.

50 CFR Parts 611 and 655 are revised as follows:

1. 50 CFR 611.20, Appendix 1, is revised to read as follows:

PART 611—FOREIGN FISHING

§ 611.20 (Appendix 1) [Revised]

	Species	Species code	Area	OY	DAH	JVP	Reserve	TALFF
1. Northwest Atlantic Ocean fisheries.								
* * *		*	*	*	*	*		*
C. Trawl fisheries	Squid, long-finned	522		44,000	7,000		13,000	18,000
	Squid, short-finned	524		30,000	5,000		13,000	12,000
* * *		*	*	*		*		*

2. 50 CFR Part 655 is revised to read as follows:

PART 655—ATLANTIC SQUID FISHERY

Subpart A—General Provisions

Sec.
655.1 Purpose and scope.
655.2 Definitions.
655.3 Relation to other laws.
655.4 Vessel permits and fees.
655.5 Recordkeeping and reporting requirements.
655.6 Vessel identification.
655.7 Prohibitions.
655.8 Enforcement.
655.9 Penalties.

Subpart B—Management Measures

655.20 Fishing year.
655.21 Allowable levels of harvest.
655.22 Allocation. [Reserved]
655.23 Closure of fishery.
655.24 Area/time restrictions. [Reserved]
655.25 Gear/vessel equipment restrictions. [Reserved]
655.26 Effort restrictions. [Reserved]

Authority: 16 U.S.C. 1801 et seq.

Subpart A—General Provisions

§ 655.1 Purpose and scope.

(a) The regulations in this part: (1) Implement the Fishery Management Plan for the Squid Fishery of the Northwest Atlantic Ocean, which was prepared and adopted by the Mid-Atlantic Fishery Management Council and approved by the Assistant Administrator; and (2) govern fishing for Atlantic squid by fishing vessels of the United States within that portion of the Northwest Atlantic Ocean, excluding the Gulf of Mexico, over which the United States exercises exclusive fishery management authority.

(b) The regulations governing fishing for Atlantic squid by foreign vessels in the fishery conservation zone are contained in 50 CFR Part 611. Appendix I to 50 CFR 611.20 contains the TALFFs for Atlantic squid.

§ 655.2 Definitions

In addition to the definitions in the Act, the terms used in this part shall have the following meanings:

Act means the Fishery Conservation and Management Act of 1976, as amended, 16 U.S.C. 1801 *et seq.*

Assistant Administrator means the Assistant Administrator for Fisheries of the National Oceanic and Atmospheric Administration, Department of Commerce, or an individual to whom appropriate authority has been delegated.

Atlantic squid or *squid* means the species *Illex illecebrosus* (short-finned or summer squid) and *Loligo pealei* (long-finned or bone squid). *Illex* means the species *Illex illecebrosus. Loligo* means the species *Loligo pealei.*

Authorized Officer means:

(a) Any commissioned, warrant, or petty officer of the U.S. Coast Guard;

(b) Any certified enforcement officer or special agent of the National Marine Fisheries Services;

(c) Any officer designated by the head of any Federal or State agency which has entered into an agreement with the Secretary of Commerce and the Commandant of the U.S. Coast Guard to enforce the provisions of the Act; or

(d) Any U.S. Coast Guard personnel accompanying and acting under the direction of any person described in paragraph (a) of this definition.

Catch, take, or harvest includes, but is not limited to, any activity which results in mortality to any squid or in bringing any squid on board a vessel.

Charter or party boat means any vessel which carries passengers for hire to engage in fishing.

Fishery Conservation Zone (FCZ) means that area adjacent to the United States which, except where modified to accommodate international boundaries, encompasses all waters from the seaward boundary of each of the coastal States to a line on which each point is 200 nautical miles from the baseline from which the territorial sea of the United States is measured.

Fishery Management Plan (FMP) means the Fishery Management Plan for the Squid Fishery of the Northwest Atlantic Ocean, and any amendments thereto.

Fishing includes any activity, other than scientific research activity conducted by a scientific research vessel, which involves:

(a) The catching, taking, or harvesting of squid;

(b) The attempted catching, taking, or harvesting of squid;

(c) Any other activity which can reasonably be expected to result in the catching, taking, or harvesting of squid; or

(d) Any operations at sea in support of, or in preparation for, any activity described in paragraph (a), (b) or (c) of this definition.

Fishing trip means a period of time during which fishing is conducted, beginning when the vessel leaves port and ending when the vessel returns to port.

Fishing vessel means any vessel, boat, ship, or other craft which is used for, equipped to be used for, or of a type which is normally used for: (a) Fishing; or (b) aiding or assisting one or more vessels at sea in the performance of any activity relating to fishing, including but not limited to, preparation, supply, storage, refrigeration, transportation, or processing.

Fishing week means the weekly period beginning 0001 hours Sunday and ending 2400 hours Saturday.

Operator, with respect to any fishing vessel, means the master or other individual on board and in charge of that vessel.

Owner, with respect to any fishing vessel, means:

(a) Any person who owns that vessel in whole or in part;

(b) Any charterer of the vessel, whether bareboat, time or voyage;

(c) Any person who acts in the capacity of a charterer, including but not limited to parties to a management agreement, operating agreement, or any similar agreement that bestows control over the destination, function, or operation of the vessel; or

(d) Any agent designated as such by a person described in paragraph (a), (b) or (c) of this definition.

Person means any individual (whether or not a citizen or national of the United States), corporation, partnership, association, or other entity (whether or not organized or existing under the laws of any State), and any Federal, State, local, or foreign government or any entity of any such government.

Person who receives Atlantic squid for a commercial purpose means any person (excluding governments and governmental entities) engaged in commerce who is the first purchaser of squid. The term includes, but is not limited to, dealers, brokers, processors, cooperatives, and fish exchanges. It does not include a person who only transports squid between a fishing vessel and a first purchaser.

Regional Director means the Regional Director, Northeast Region, National Marine Fisheries Service, Federal Building, 14 Elm Street, Gloucester, Massachusetts 01930; or a designee.

Regulated species means any species for which fishing by a vessel of the United States is regulated pursuant to the Act.

United States harvested squid means squid caught, taken, or harvested by vessels of the United States under this part, whether or not such squid is landed in the United States.

Vessel of the United States means:

(a) Any vessel documented or numbered by the United States Coast Guard under United States law; or

(b) Any vessel under five net tons which is registered under the laws of any State.

§ 655.3 Relation to other laws.

(a) Persons affected by these regulations should be aware that other Federal and State statutes and regulations may apply to their activities.

(b) All fishing activity, regardless of species sought, is prohibited pursuant to 15 CFR Part 924, on the *U.S.S. Monitor Marine Sanctuary*, which is located approximately 15 miles southwest of Cape Hatteras off the coast of North Carolina (35°00'23" N., 75°24'32" W.).

§ 655.4 Vessel permits and fees.

(a) *General.* Every fishing vessel which fishes for Atlantic squid under this Part must have a fishing permit issued under this section. Vessels are exempt from this requirement if they catch no more than 100 pounds of squid per trip.

(b) *Eligibility.* [Reserved]

(c) *Application.* (1) An application for a fishing permit under this Part must be submitted and signed by the owner or operator of the vessel on an appropriate form obtained from the Regional Director. The application must be submitted to the Regional Director at least 30 days prior to the date on which the applicant desires to have the permit made effective.

(2) Applicants shall provide all the following information:

(i) The name, mailing address including ZIP code, and telephone number of the owner of the vessel;

(ii) The name of the vessel;

(iii) The vessel's United States Coast Guard documentation number or the vessel's State registration number, for vessels not required to be documented under provisions of Title 46 of the United States Code;

(iv) The home port or principal port of landing, gross tonnage, radio call sign, and length of the vessel;

(v) The engine horsepower of the vessel and year the vessel was built;

(vi) The type of construction, type of propulsion, and type of echo sounder of the vessel;

(vii) The permit number of any current or previous Federal fishery permit issued to the vessel;

(viii) The approximate fish hold capacity of the vessel;

(ix) The type and quantity of fishing gear used by the vessel;

(x) The average size of the crew, which may be stated in terms of a normal range; and

(xi) Any other information concerning vessel and gear characteristics requested by the Regional Director.

(3) Any change in the information specified in paragraph (c)(2) of this section shall be submitted in writing to the Regional Director by the owner within 15 days of any such change.

(d) *Fees.* No fee is required for any permit issued under this Part.

(e) *Issuance.* The Regional Director shall issue a permit to the applicant not later than 30 days from the receipt of a completed application.

(f) *Expiration.* A permit shall expire upon any change in vessel ownership, registration, name, length, gross tonnage, fish hold capacity, home port or the regulated fisheries in which the vessel is engaged.

(g) *Duration.* A permit shall continue in effect until it expires or is revoked, suspended, or modified pursuant to 50 CFR Part 621.

(h) *Alteration.* No person shall alter, erase, or mutilate any permit. Any permit which has been intentionally altered, erased, or mutilated is invalid.

(i) *Replacement.* Replacement permits may be issued by the Regional Director when requested in writing by the owner or operator stating the need for replacement, the name of the vessel, and the fishing permit number assigned. An application for a replacement permit shall not be considered a new application.

(j) *Transfer.* A permit issued under this Part is not transferable or assignable. A permit shall be valid only for the fishing vessel and owner for which it is issued.

(k) *Display.* A permit issued under this part must be carried on board the fishing vessel at all times. The operator of a fishing vessel shall present the permit for inspection upon request of any Authorized Officer.

(l) *Sanctions.* Subpart D of 50 CFR Part 621 (Civil Procedures) governs the imposition of sanctions against a permit issued under this part. As specified in that Subpart D, a permit may be revoked, modified, or suspended if the permitted fishing vessel is used in the commission of an offense prohibited by the Act or these regulations, or if a civil penalty or criminal fine imposed under the Act is not paid.

§ 655.5 Recordkeeping and reporting requirements.

(a) *Fishing vessel records.* (1) The operator of any fishing vessel issued a permit to fish for squid under this part shall:

(i) Maintain on board the vessel an accurate and complete fishing vessel record on forms supplied by the Regional Director;

(ii) Make the fishing vessel record available for inspection or reproduction by an Authorized Officer at any time during or after a fishing trip;

(iii) Keep each fishing vessel record for one year after the date of the last entry in the fishing vessel record; and

(iv) Submit fishing vessel records, as specified in § 655.5(a)(2).

(2) The owner or operator of any fishing vessel conducting any fishing operation subject to this part shall:

(i) Submit a complete fishing vessel record to a location designated by the Regional Director 48 hours after the end of any fishing week or fishing trip (whichever time period is longer) during which any regulated species were taken; or

(ii) Submit a statement to a location designated by the Regional Director 48 hours after the end of any calendar week within which no fishing for any regulated species occurred.

(3) Fishing vessel records shall contain information on a daily basis for the entirety of any trip during which squid or any other regulated species are caught.

(i) The information shall include: Dates of fishing, type and size of gear used, areas fished, duration of fishing time, time period of tow or gear set, and the estimated weight of each species taken.

(ii) Information on squid catches shall be provided separately for *Illex* and *Loligo*.

(4) A request for exemption from the provisions of paragraph (a)(2)(ii) of this section shall be submitted in writing to the Regional Director. Such request shall state the reason for the request and the period of time for which the exemption is to apply. The Regional Director may issue an exemption for a period of time greater than two months and less than ten months. If an exemption is issued, the Regional Director must be notified in writing of the operator's intent to resume fishing before fishing may be allowed.

(5) The Assistant Administrator may revoke, modify, or suspend the permit of a fishing vessel whose owner or operator falsifies or fails to submit the records and reports prescribed by this section, in accordance with the provisions of 50 CFR Part 621.

(b) *Fish dealer or processor reports.* (1) Any person who receives Atlantic squid for a commercial purpose from a fishing vessel subject to this Part shall file a weekly report (Sunday through Saturday) within 48 hours of the end of the week in which squid are received. This report shall include information on all first purchases, of squid (listing *Illex* and *Loligo* separately) and all other fish made during the week. Such information shall include date of transaction, name of the vessel from which squid were

received, and the amount and price paid for squid and all other fish received.

(2) Domestic squid processing capacity. [Reserved]

(3) Reports required by § 655.5(b) shall be made on forms supplied by the Regional Director and submitted to a location designated by him.

(4) Inspection of records. [Reserved]

§ 655.6 Vessel identification.

(a) *Official Number.* Each fishing vessel subject to this Part and over 25 feet in length shall display its Official Number on the port and starboard sides of the deckhouse or hull and on an appropriate weather deck so as to be clearly visible from enforcement vessels and aircraft. The Official Number is the documentation number issued by the U.S. Coast Guard for documented vessels, or the registration number issued by a State or the U.S. Coast Guard for undocumented vessels.

(b) *Numerals.* (1) The Official Number shall be at least 18 inches in height for fishing vessels over 65 feet in length and at least 10 inches in height for all other vessels over 25 feet in length.

(2) The Official Number shall be permanently affixed to or painted on the vessel and shall be block Arabic numerals in contrasting color. However, charter or party boats may use nonpermanent markings to display the Official Number whenever the vessel is fishing for squid.

(c) *Vessel length.* The length of a vessel, for purposes of this section, is that length set forth in U.S. Coast Guard or State records.

(d) *Duties of operator.* The operator of each fishing vessel shall:

(1) Keep the Official Number clearly legible and in good repair, and

(2) Ensure that no part of the fishing vessel, its rigging, or its fishing gear obstructs the view of the Official Number from an enforcement vessel or aircraft.

§ 655.7 Prohibitions.

It is unlawful for any person to:

(a) Use any vessel for the taking, catching, harvesting, or landing of any Atlantic squid (except as provided for in § 655.4(a)), unless the vessel has a valid permit issued pursuant to this part, on board the vessel;

(b) Fail to report to the Regional Director within 15 days any change in the information contained in the permit application for a vessel;

(c) Falsify or fail to make, keep, maintain, or submit any fishing vessel record or fish dealer or processor report, or other record or report required by this part;

(d) Make any false statement, oral or written, to an Authorized Officer, concerning the taking, catching, landing, purchase, sale, or transfer of any squid;

(e) Fail to affix and maintain vessel markings as required by § 655.6;

(f) Possess, have custody or control of, ship, transport, offer for sale, sell, purchase, import, export, or land any Atlantic squid taken in violation of the Act, this part, or any regulation promulgated under the Act;

(g) Fish for, take, catch, or harvest any Atlantic squid from the FCZ after the fishery has been closed pursuant to § 655.23;

(h) Transfer directly or indirectly, or attempt to so transfer, any United States harvested squid to any foreign fishing vessel, while such vessel is within the FCZ, unless the foreign fishing vessel has been issued a permit under section 204 of the Act, which authorizes the receipt by such vessel of the United States harvested squid;

(i) Refuse to permit an Authorized Officer to inspect any fishing vessel record;

(j) Refuse to permit an Authorized Officer to board a fishing vessel subject to such person's control for purposes of conducting any search or inspection in connection with the enforcement of this Act, this part, or any other regulation promulgated under the Act;

(k) Fail to comply immediately with enforcement and boarding procedures specified in § 655.8;

(l) Forcibly assault, resist, oppose, impede, intimidate, threaten or interfere with an Authorized Officer in the conduct of any search or inspection under the Act;

(m) Resist a lawful arrest for any act prohibited by this part;

(n) Interfere with, obstruct, delay, or prevent by any means the apprehension or arrest of another person knowing that such other person has committed any act prohibited by this part;

(o) Interfere with, obstruct, delay, or prevent by any means a lawful investigation or search in the process of enforcing this part; or

(p) Violate any other provision of this part, the Act, or any regulation promulgated pursuant thereto.

§ 655.8 Enforcement.

(a) *General.* The operator of any fishing vessel subject to this Part shall immediately comply with instructions issued by an Authorized Officer to facilitate safe boarding and inspection of the vessel, its gear, equipment, fishing record, and catch for purposes of enforcing the Act and this Part.

(b) *Signals.* Upon being approached by a U.S. Coast Guard vessel or aircraft, or other vessel or aircraft authorized to enforce the Act, the operator of the fishing vessel shall be alert for communications conveying enforcement instructions. VHF-FM radiotelephone is the normal method of communication between vessels. Should radiotelephone communications fail, however, other methods of communication, including visual signals, may be employed. The following signals extracted from the International Code of Signals are among those which may be used, and are included here for the safety and information of fishing vessel operators:

(1) "L" means "You should stop your vessel instantly";

(2) "SQ3" means "You should stop or heave to; I am going to board you;" and

(3) "AA AA AA etc.," which is the call to an unknown station, to which the signaled vessel shall respond by illuminating the vessel's Official Number required by § 655.6.

(c) *Boarding.* A vessel signaled to stop or heave to for boarding shall:

(1) Stop immediately and lay to or maneuver in such a way as to permit the authorized Officer and his/her party to come aboard.

(2) Provide a safe ladder for the Authorized Officer and his/her party;

(3) When necessary to facilitate the boarding and/or when requested by an Authorized Officer, provide a man rope, safety line and illumination for the ladder; and

(4) Take such other actions as necessary to insure the safety of the Authorized Officer and his/her party to facilitate the boarding.

§ 655.9 Penalties.

Any person or fishing vessel found to be in violation of this part will be subject to the civil and criminal penalty provisions and forfeiture provisions prescribed in the Act, and to 50 CFR Part 620 (Citations) and Part 621 (Civil Procedures).

Subpart B—Management Measures

§ 655.20 Fishing year.

The fishing year for Atlantic squid is the 12-month period beginning April 1 and ending on March 31 of the following year.

§ 655.21 Allowable levels of harvest.

(a) *Harvest levels.* The allowed level of harvest of Atlantic squid on a fishing year basis is 30,000 metric tons (mt) of *Illex* and 44,000 mt of *Loligo*. The initial level of harvest by vessels of the United States is 5,000 mt of *Illex* and 7,000 mt of *Loligo*.

(b) *Reserve.* A reserve of 13,000 mt for *Illex* and 19,000 mt for *Loligo* is

available for adjustments to the initial level of foreign fishing if it is determined that domestic fishermen will not harvest it.

(c) *Territorial waters.* These regulations do not restrict harvest of Atlantic squid in the waters landward of the FCZ. Harvests from these waters, however, shall be subtracted from the annual domestic levels of harvest set forth in paragraph (a) of this section.

§ 655.22 Allocation. [Reserved]

§ 655.23 Closure of fishery.

(a) *General.* The Regional Director shall periodically monitor catches and landings of Atlantic squid.

(b) *Decision to close.* The Assistant Administrator shall close the domestic fishery for either species when the domestic harvest for that species has reached 80 percent of the total of the initial level of domestic harvest plus the part of the reserve which has not been allocated to TALFF, if he finds that this action is necessary to prevent the allowed level of domestic harvest from being exceeded.

(c) *Notice of closure.* If the Assistant Administrator determines that a closure of the domestic fishery for either *Illex* or *Loligo* is necessary, the Assistant Administrator shall:

(1) Notify in advance the Executive Directors of the Mid-Atlantic, New England, and South Atlantic Fishery Management Councils of the closure;

(2) Mail notifications to all holders of permits issued under § 655.5 of the closure at least 72 hours prior to the effective date of the closure; and

(3) Publish a notice of closure in the Federal Register.

(d) *Incidental catch.* During a period of closure, fishing vessels may catch, take, or harvest the relevant species of squid incidental to fishing for other species of fish: *Provided,* That such species of squid constitutes no more than 10 percent by weight of the total catch of all fish on board the vessel at the end of any fishing trip.

§ 655.24 Area/time restrictions. [Reserved]

§ 655.25 Gear/vessel equipment restrictions. [Reserved]

§ 655.26 Effort restrictions. [Reserved]

[FR Doc. 80-20061 Filed 7-2-80; 8:45 am]
BILLING CODE 3510-22-M

DEPARTMENT OF AGRICULTURE

Agricultural Marketing Service

7 CFR Part 910

[Lemon Reg. 259]

Lemons Grown in California and Arizona; Limitation of Handling

AGENCY: Agricultural Marketing Service, USDA.

ACTION: Final rule.

SUMMARY: This regulation establishes the quantity of fresh California-Arizona lemons that may be shipped to market during the period July 6–12, 1980. Such action is needed to provide for orderly marketing of fresh lemons for this period due to the marketing situation confronting the lemon industry.

EFFECTIVE DATE: July 6, 1980.

FOR FURTHER INFORMATION CONTACT: Malvin E. McGaha, 202–447–5975.

SUPPLEMENTARY INFORMATION: *Findings.* This regulation is issued under the marketing agreement, as amended, and Order No. 910, as amended (7 CFR Part 910), regulating the handling of lemons grown in California and Arizona. The agreement and order are effective under the Agricultural Marketing Agreement Act of 1937, as amended (7 U.S.C. 601–674). The action is based upon the recommendations and information submitted by the Lemon Administrative Committee, and upon other information. It is hereby found that this action will tend to effectuate the declared policy of the act.

This action is consistent with the marketing policy for 1979–80 which was designated significant under the procedures of Executive Order 12044. The marketing policy was recommended by the committee following discussion at a public meeting on July 31, 1979. A final impact analysis on the marketing policy is available from Malvin E. McGaha, Chief, Fruit Branch, F&V, AMS, USDA, Washington, D.C. 20250, telephone 202–447–5975.

The committee met again publicly on July 1, 1980, at Los Angeles, California, to consider the current and prospective conditions of supply and demand and recommended a quantity of lemons deemed advisable to be handled during the specified week. The committee reports the demand for lemons is steady.

It is further found that there is insufficient time between the date when information became available upon which this regulation is based and when the action must be taken to warrant a 60 day comment period as recommended in E.O. 12044, and that it is impracticable and contrary to the public interest to give preliminary notice, engage in public rulemaking, and postpone the effective date until 30 days after publication in the Federal Register (5 U.S.C. 553). It is necessary to effectuate the declared purposes of the act to make these regulatory provisions effective as specified, and handlers have been apprised of such provisions and the effective time.

§ 910.559 Lemon Regulation 259.

Order. (a) The quantity of lemons grown in California and Arizona which may be handled during the period July 6, 1980 through July 12, 1980, is established at 275,000 cartons.

(b) As used in this section, "handled" and "carton(s)" mean the same as defined in the marketing order.

(Secs. 1–19, 48 Stat. 31, as amended; 7 U.S.C. 601–674)

Dated: July 2, 1980.

D. S. Kuryloski,

Deputy Director, Fruit and Vegetable Division, Agricultural Marketing Service.

[FR Doc. 80-20267 Filed 7-2-80; 11:46 am]
BILLING CODE 3410-02-M

Proposed Rules

Federal Register
Vol. 45, No. 130
Thursday, July 3, 1980

This section of the FEDERAL REGISTER contains notices to the public of the proposed issuance of rules and regulations. The purpose of these notices is to give interested persons an opportunity to participate in the rule making prior to the adoption of the final rules.

DEPARTMENT OF AGRICULTURE

Agricultural Marketing Service

7 CFR Parts 1097, 1102, and 1108

[Dockets Nos. AO-219-A36; AO-237-A30; AO-243-A34]

Milk in the Memphis, Tenn.; Fort Smith, Ark.; and Central Arkansas Marketing Areas; Extension of Time for Filing Briefs

AGENCY: Agricultural Marketing Service, USDA.

ACTION: Extension of time for filing briefs.

SUMMARY: This notice extends the time for filing briefs on the hearing held April 15–17, 1980, at Memphis, Tennessee, concerning proposals to amend the Memphis, Fort Smith, and Central Arkansas orders. Interested parties requested the additional time to complete their analyses of the record.

DATE: Briefs now are due on or before July 15, 1980.

ADDRESS: Briefs (4 copies) should be filed with the Hearing Clerk, Room 1077 South Building, U.S. Department of Agriculture, Washington, D.C. 20250.

FOR FURTHER INFORMATION CONTACT: Robert F. Groene, Marketing Specialist, Dairy Division, Agricultural Marketing Service, U.S. Department of Agriculture, Washington, D.C. 20250, (202) 447–4824.

SUPPLEMENTARY INFORMATION: Prior documents in this proceeding. Notices of Hearing: issued March 26, 1980, published March 31, 1980 (45 FR 20888); issued April 7, 1980, published April 10, 1980 (45 FR 24492).

Notice is hereby given that the time for filing briefs, proposed findings and conclusions on the record of the public hearing held April 15–17, 1980, at Memphis, Tennessee, with respect to proposed amendments to the tentative marketing agreement and to the order regulating the handling of milk in the Memphis, Tennessee; Fort Smith, Arkansas; and Central Arkansas marketing areas pursuant to notices issued March 26, 1980 (45 FR 20888) and April 7, 1980 (45 FR 24492) is hereby extended to July 15, 1980.

This notice is issued pursuant to the provisions of the agricultural Marketing Agreement Act of 1937, as amended (7 U.S.C. 601 *et seq.)*, and the applicable rules of practice and procedure governing the formulation of marketing agreements and marketing orders (7 CFR Part 900).

Signed at Washington, D.C., on June 27, 1980.

Irving W. Thomas,
Acting Deputy Administrator, Marketing Program Operations.

[FR Doc. 80-19950 Filed 7-2-80; 8:45 am]
BILLING CODE 3410-02-M

NUCLEAR REGULATORY COMMISSION

10 CFR Part 20

Miscellaneous Clarifying Amendments

AGENCY: U.S. Nuclear Regulatory Commission.

ACTION: Proposed rule.

SUMMARY: The Nuclear Regulatory Commission is proposing miscellaneous amendments to the Commission's "Standards for Protection Against Radiation." These amendments do not modify current practices or application of the regulations, but will clarify the text of several sections with the view of avoiding possible misinterpretation of these sections.

DATE: Comment period expires on September 2, 1980.

ADDRESSES: Written comments or suggestions for consideration in connection with the proposed amendments should be submitted to the Secretary of the Commission, U.S. Nuclear Regulatory Commission, Washington, DC 20555, Attention: Docketing and Service Branch.

FOR FURTHER INFORMATION CONTACT: J. M. Felton, Director, Division of Rules and Records, Office of Administration, U.S. Nuclear Regulatory Commission, Washington, DC 20555, Telephone: (301) 492–7211.

SUPPLEMENTARY INFORMATION: The Nuclear Regulatory Commission is considering miscellaneous amendments to several sections of its "Standards for Protection Against Radiation," 10 CFR Part 20. These amendments do not modify current practices or application of the regulations, but will clarify the text of several sections with the view of avoiding possible misinterpretations of these sections.

Sections 20.101, 20.104 (a), (b), and 20.105 prohibit a licensee from "causing" an individual to be exposed to radiation or radioactive material in excess of specified limits. Section 20.103, exposure of individuals to concentrations of radioactive materials in restricted areas, prohibits a licensee from "permitting" an individual in a restricted area to inhale a quantity of radioactive material in excess of specified limits. It is the intent of §§ 20.101, 20.103, 20.104, and 20.105 to hold licensees responsible for overexposures occurring in connection with their licensed activities if (1) the licensed activity "caused" an individual to be overexposed, or (2) an inadequacy or deficiency in the licensed activity "permitted" an individual to be overexposed. Included in these prohibitions would be overexposures resulting from the acts of employees acting with or without management direction in using licensed material.

Accordingly, it is proposed that §§ 20.101, 20.103, 20.104 (a), (b) and 20.105 be amended to clarify this matter by adding the words "or permit" to §§ 20.101, 20.104 (a), (b), 20.105, and by adding the words "cause or" to § 20.103.

Paragraph 20.201(b) currently states that:

> (b) Each licensee shall make or cause to be made such surveys as may be necessary for him to comply with the regulations in this part.

The purpose of the survey requirement in 10 CFR 20.201(b) is to assure that licensees have evaluated radiation hazards incident to the production, use, release, disposal, or presence of radioactive materials or other sources of radiation in order that compliance with Commission requirements is by design and not fortuitous. Licensees have at times argued that enforcement of the survey requirement in § 20.201(b) is limited to situations where the failure to survey or the performance of an inadequate survey resulted in noncompliance with some other requirement of 10 CFR Part 20. While the current language of § 20.201(b) is susceptible to such a reading, the Commission over the years has given

the section a broader construction. The regulation has been redrafted to clarify the intent of the survey requirement to assure that licensees are on notice that the requirement is to make appropriate surveys and that the requirement may be violated even if noncompliance with some other requirement of Part 20 does not result from the failure to survey or from the performance of an inadequate survey.

Pursuant to the Atomic Energy Act of 1954, as amended, the Energy Reorganization Act of 1974, as amended, and section 553 of Title 5 of the United States Code, notice is hereby given that adoption of the following amendments to Title 10, Chapter I, Code of Federal Regulations, Part 20 is contemplated.

§ 20.101 [Amended]

1. Paragraph 20.101(a) of 10 CFR Part 20 is amended by deleting the words "as to cause any individual in a restricted area" and substituting therefor "as to cause or permit any individual in a restricted area".

§ 20.103 [Amended]

2. Paragraphs 20.103(a)(1) and 20.103(a)(2) are amended by deleting the words "as to permit any individual in a restricted area" and substituting therefor "as to cause or permit any individual in a restricted area".

§ 20.104 [Amended]

3. Paragraphs 20.104(a) and 20.104(b) are amended by deleting the words "as to cause any individual within a restricted area" and substituting therefor "as to cause or permit any individual in a restricted area".

§ 20.105 [Amended]

4. The last sentence of paragraph 20.105(a) is amended by deleting the words "proposed limits are not likely to cause any individual" and substituting therefor "proposed limts are not likely to cause or permit any individual".

5. Paragraph 20.201(b) is revised to read as follows:

§ 20.201 Surveys.

* * * * *

(b) Each licensee shall make or cause to be made such surveys as are reasonably called for by circumstances surrounding the use of source, byproduct, or special nuclear material.

(Secs. 53, 62, 81, 101, 103, 104 and 161 b and i, Pub. L. 83-703, 68 Stat. 919 (42 U.S.C. 2073, 2092, 2111, 2131, 2133, 2134 and 2201 b and i); sec. 201f, Pub. L. 93-438, 88 Stat. 1233 (42 U.S.C. 5841f))

Dated at Bethesda, Maryland, this 23d day of June 1980.

For the Nuclear Regulatory Commission.

William J. Dircks,

Acting Executive Director for Operations.

[FR Doc. 80-20086 Filed 7-2-80; 8:45 am]

BILLING CODE 7590-01-M

DEPARTMENT OF ENERGY

Economic Regulatory Administration

10 CFR Parts 503, 504, 506

[Docket No. ERA-R-80-17]

Calculation for the Cost of Using Alternate Fuels Under the Powerplant and Industrial Fuel Use Act of 1978

AGENCY: Economic Regulatory Administration Department of Energy.

ACTION: Notice of Change of Hearing Date.

SUMMARY: On June 13, 1980, the Economic Regulatory Administration of the Department of Energy issued a Notice of Proposed Rulemaking and Public Hearing (45 FR 42190 June 23, 1980) to implement certain cost calculation provisions of the Powerplant and Industrial Fuel Use Act of 1978. The July 10, 1980 public hearing is hereby cancelled.

DATE: The hearing date is hereby scheduled for July 31, 1980, and August 1, 1980.

ADDRESS: Hearing Location: Department of Energy, Room 2105, 2000 M Street, N.W., Washington, D.C. 20461.

FOR FURTHER INFORMATION CONTACT:

William L. Webb (Office of Public Information), Economic Regulatory Administration, Department of Energy, Room B-110, 2000 M Street, N.W., Washington, D.C. 20461 (202-653-4055).

Stephen M. Stern (Regulations and Emergency Planning), Economic Regulatory Administration, Department of Energy, Room 7002, 2000 M Street, N.W., Washington, D.C. 20461 (202-653-3217).

Issued in Washington, D.C., June 27, 1980.

F. Scott Bush,

Assistant Administrator, Regulations and Emergency Planning Economic Regulatory Administration.

[FR Doc. 80-20102 Filed 7-2-80; 8:45 am]

BILLING CODE 6450-01-M

FEDERAL RESERVE SYSTEM

12 CFR Part 204

[Docket No. R-0306]

Reserve Requirements of Depository Institutions

Correction

In FR Doc. 80-17449 appearing at page 38388 in the issue for Monday June 9, 1980, on page 38396, third column, second line of paragraph (f)(2), insert "not" after "is".

BILLING CODE 1505-01-M

DEPOSITORY INSTITUTIONS DEREGULATION COMMITTEE

12 CFR Part 1204

[Docket No. D-0011]

Ceiling Rates on Interest-Bearing Transaction Accounts

AGENCY: Depository Institutions Deregulation Committee.

ACTION: Proposed rulemaking.

SUMMARY: The Depository Institutions Deregulation Committee ("Committee") proposes to adopt rules, effective December 31, 1980, concerning the maximum rate of interest payable on interest-bearing transaction accounts. In order to provide competitive equality among depository institutions consistent with the legislative intent of Title II of the Depository Institutions Deregulation and Monetary Control Act of 1980 (Pub. L. 96-221, 94 Stat. 142 (12 U.S.C. 3501 *et seq.*)), the Committee proposes to establish a uniform ceiling rate on all interest-bearing transaction accounts at commercial banks, mutual savings banks, and savings and loan associations. In addition, in order to facilitate the conduct of monetary policy, the Committee desires to encourage depositors to segregate transaction balances from balances that are inactive, and thus proposes to establish a ceiling rate on transaction accounts that is below the ceiling rate payable on nontransaction savings deposits at commercial banks and thrift institutions. The Committee is considering defining interest-bearing transaction accounts as those accounts that will be subject to transaction account reserve requirements under the Federal Reserve's Regulation D. In this regard, the Federal Reserve has proposed to define the following as transaction accounts: negotiable order of withdrawal accounts (NOWs); savings accounts subject to automatic transfers (ATS), telephone transfers

(TTS), and pre-authorized nonnegotiable transfers (PNTS); or savings accounts which permit payments to third parties by means of an automated teller machine (ATM), remote service unit (RSU) or other electronic device.

DATE: Comments must be received by August 4, 1980.

ADDRESS: Normand R. V. Bernard, Executive Secretary, Depository Institutions Deregulation Committee, Federal Reserve Building, 20th Street and Constitution Avenue, NW., Washington, D.C. 20551. All material submitted should include the Docket Number D-0011. Such material will be made available for inspection and copying upon request except as provided in section 1202.5 of the Committee's Rules Regarding Availability of Information (12 CFR 1202.5).

FOR FURTHER INFORMATION CONTACT: Nancy Feldman, Associate General Counsel, Federal Home Loan Bank Board (202/377-6440), Debra Chong, Attorney, Office of the Comptroller of the Currency (202/447-1632), F. Douglas Birdzell, Senior Attorney, Federal Deposit Insurance Corporation (202/389-4324), Anthony F. Cole, Senior Attorney, Board of Governors of the Federal Reserve System (202/452-3612), or Allan Schott, Attorney-Advisor, Treasury Department (202/566-6798).

SUPPLEMENTARY INFORMATION: Title III of the Depository Institutions Deregulation and Monetary Control Act of 1980 (the "Act") authorizes all depository institutions nationwide except credit unions to offer NOW accounts to individuals and certain nonprofit organizations effective December 31, 1980. The Act also permanently authorizes, effective April 1, 1980, federally insured commercial banks and mutual savings banks to offer ATS accounts to individuals and Federal savings and loan associations to establish RSUs for the purpose of crediting and debiting savings. The ceiling rate of interest payable on NOW accounts by those institutions already authorized to offer such accounts has been 5 per cent since January 1, 1974. A uniform ceiling applicable to these institutions was established by the Federal financial regulatory agencies in view of legislative history which indicated that all depository institutions should be able to offer NOW accounts on the same terms in the interest of competitive equality. As provided in Title XVI of the Financial Institutions Regulatory and Interest Rate Control Act of 1978 (Pub. L. 95-630), the ceiling rate of interest payable on ATS accounts for all institutions authorized to offer such accounts must be no greater than the ceiling rate applicable to savings deposits at commercial banks. The current ceiling for ATS accounts is 5¼ per cent. Commercial banks may currently offer TTS, PNTS, and accounts from which payments may be made by ATMs/RSUs at a ceiling rate of 5¼ per cent. Thrift institutions currently may offer such accounts at a ceiling rate of 5½ per cent.

The Committee believes the provisions of the Act and of the legislative history indicate the Congressional intent for rate parity over time on all interest-bearing transaction accounts at all depository institutions. Moreover, because NOW, ATS, TTS, PNTS, and ATM/RSU accounts all may be used as transaction accounts, the Committee proposes to establish a uniform ceiling applicable to all such accounts. The Committee proposes to treat as transaction accounts for the purposes of ceiling rate limitations those accounts that the Federal Reserve determines are subject to Federal Reserve requirements as transaction accounts under Regulation D. In this regard, it should be noted that the Federal Reserve has invited comments by July 15 (45 Fed. Reg. 38388) on a proposal to amend Regulation D (Reserve Requirements of Depository Institutions). The proposal defines transaction accounts to include, among others, TTS, PNTS, and ATM/RSU accounts, but invites comment on the feasibility and desirability of exempting from transaction reserve requirements sub accounts that are limited to a minimal number of transfers per month—perhaps one or two.

The Committee believes that establishing a uniform ceiling on transaction accounts is a move toward competitive equality among depository institutions in furtherance of the Congressional intent. In addition, in order to encourage depositors to segregate transaction balances from balances that are inactive and to aid the conduct of monetary policy by facilitating interpretation of movements in the monetary aggregates, the Committee proposes to establish a uniform transaction account ceiling rate that is below the ceiling rates payable on nontransaction savings deposits at commercial banks and thrift institutions. Under the proposals, the ceiling rate on all interest-bearing transaction accounts would be below the ceiling rate of interest payable on nontransaction savings accounts at commercial banks.

The Committee requests comment on four alternative options for the level of the ceiling rate of interest payable on transaction accounts. The first three options would establish a uniform ceiling rate on all transaction accounts at 5, 5¼, or 5½ per cent. The fourth alternative option would establish a ceiling rate higher than 5½ per cent on transaction accounts. Under Option 1, there would be no increase in current ceiling rates applicable to savings or fixed-ceiling time deposits. However, the other three options would require an increase in the ceiling rates currently payable on savings accounts since the Committee proposes to establish a ceiling rate on transaction accounts that is below the ceiling rate payable on nontransaction savings accounts at commercial banks. In addition, adoption of one of these three options would require similar increases in the ceiling rates of interest payable on fixed-ceiling time deposits in order to maintain the relationships embodied in the current ceiling rate structure.

Comments specifically are requested on: (1) The appropriateness of a spread between the ceiling rates on transaction accounts and nontransaction savings accounts; (2) the appropriateness of increasing the entire fixed-ceiling time deposit rate structure if the savings ceiling rate is raised; and (3) the cost effects on depository institutions of each of these options.

Option 1—Establish A 5 Percent Ceiling for All Interest-Bearing Transaction Accounts

A uniform ceiling at 5 per cent would encourage the separation of transaction accounts from nontransaction savings accounts and would facilitate the conduct of monetary policy. This option also would minimize the short-term reduction in earnings of depository institutions associated with the nationwide introduction of NOW accounts on December 31, 1980, and would not require a change in the existing ceiling rate on savings accounts. This option, however, would require a ¼ point reduction of the ceiling rate of interest payable on ATS, TTS, PNTS, and ATM third party payment accounts at commercial banks, and a ½ point reduction of the ceiling rate payable on TTS, PNTS and RSU third party payment accounts at thrift institutions.

Option 2—Establish a 5¼ Per Cent Ceiling For All Interest-Bearing Transaction Accounts

Under this option, to ensure the separation of transaction accounts from nontransaction savings accounts, the ceiling rate of interest on nontransaction savings accounts would be raised to 5½ per cent at commercial banks and 5¾ per cent at thrift institutions. However,

no change in the ceiling on ATS accounts (presently 5¼) would be required. The ceiling rate on NOW accounts (presently 5 per cent) would be increased by ¼ point and the ceiling rate on TTS, PNTS, and RSU third party payment accounts at thrift institutions would be lowered by ¼ point. In order to maintain the current relationships among the rate ceilings on savings deposits and the various maturity categories of fixed-ceiling time deposits, as well as the existing differentials between ceiling rates at commercial banks and those at thrifts, the ceiling rates on fixed-ceiling time deposits would be raised by ¼ point.

Option 3—Establish a 5½ Percent Ceiling for All Interest-Bearing Transaction Accounts

Under this option, to ensure the separation of transaction accounts from nontransaction savings accounts, the ceiling rate of interest on nontransaction savings accounts would be raised to 5¾ per cent at commercial banks and 6 per cent at thrift institutions. The ceiling rates on ATS accounts and NOW accounts would be raised ¼ per cent and ½ per cent, respectively. The ceiling rate on TTS, PNTS, and ATM third party payment accounts at commercial banks would be increased by ¼ point, while no change in the ceiling rate on TTS, PNTS, and RSU third party payment accounts at thrifts would be required. The ceiling rates on all fixed-ceiling time deposits also would be increased by ½ point.

The following table summarizes the current interest rate ceilings on savings and fixed-ceiling time deposits and the ceilings under the first three options.

Account type	Commercial banks			Savings and loan associations and mutual savings banks		
	Current and Option 1	Option 2	Option 3	Current and Option 1	Option 2	Option 3
Savings	5¼	5½	5¾	5½	5¾	6
Fixed-ceiling time accounts by maturity:						
30 to 89 days	5¼	5½	5¾	(1)	(1)	(1)
90 days to 1 year	5¾	6	6¼	6	6¼	6½
1 to 2½ years	6	6¼	6½	6½	6¾	7
2½ to 4 years	6½	6¾	7	6¾	7	7¼
4 to 6 years	7¼	7½	7¾	7½	7¾	8
6 to 8 years	7½	7¾	8	7¾	8	8¼
8 years and over	7¾	8	8¼	8	8¼	8½

[1] Generally not available.

Option 4—Establish a Ceiling Higher Than 5½ Percent for All Interest-Bearing Transaction Accounts

Establishing a ceiling higher than 5½ percent would avoid or minimize the reduction in ceilings on certain interest-bearing transaction accounts required under either Options 1 or 2. Such action would provide depository institutions with greater scope to price transaction accounts in line with their individual market position, customer needs and convenience, and portfolio positions. If the existing structure of fixed-ceiling deposit rates is to be maintained, however, this option would require significant upward adjustment in all other ceiling rates.

By order of the Committee, June 25, 1980.

Normand R. V. Bernard,

Executive Secretary of the Committee.

[FR Doc. 20023 Filed 7-2-80; 8:45 am]

BILLING CODE 6210-01-M

DEPARTMENT OF TRANSPORTATION

Federal Aviation Administration

14 CFR Ch. I

Proposed Alteration of Terminal Control Area, St. Louis, Mo.; Informal Airspace Meeting No. 1

AGENCY: Federal Aviation Administration (FAA), DOT.

ACTION: Informal airspace meeting.

SUMMARY: This notice announces an informal airspace meeting to discuss a proposed alteration of the St. Louis, Missouri, Terminal Control Area (TCA), Docket 18605/80WA-10.

DATE: Tuesday, September 9, 1980—7:00 p.m.

ADDRESS: Meeting location: Noah's Ark Restaurant, 1500 South 5th Street, St. Charles, Missouri.

FOR FURTHER INFORMATION CONTACT: Dwaine E. Hiland, Airspace Specialist, Operations, Procedures and Airspace Branch, Air Traffic Division, ACE-537, FAA, Central Region, 601 East 12th Street, Kansas City, Missouri 64106, telephone 816 374-3408.

SUPPLEMENTARY INFORMATION: The proposal, if adopted, would provide a corridor 16 miles wide extending from 20 miles to 25 miles on each end of runway 12/30 centerline to accommodate a new instrument approach procedure. A substantial portion of the TCA between 15 miles and 20 miles would be eliminated. Comments on the potential economic and environmental effects are also invited. Attendance is open to the interested public, but is limited to the space available.

With the approval of the Chairman, members of the public may present statements at the meeting. Written statements in addition to, or in lieu of, oral presentations will be accepted. These should be submitted to the Chairman or as directed at the meeting.

Issued in Kansas City, Missouri on June 17, 1980.

William H. Pollard,

Chief, Air Traffic Division, FAA, Central Region.

[FR Doc. 80-19671 Filed 7-2-80; 8:45 am]

BILLING CODE 4910-13-M

---

14 CFR Part 71

[Airspace Docket No. 80-ARM-07]

Establishment of 700' and 1,200' Transition Areas

AGENCY: Federal Aviation Administration (FAA), DOT.

ACTION: Notice of proposed rulemaking.

SUMMARY: This Notice of Proposed Rulemaking (NPRM) proposes to establish 700' and 1,200' transition areas at Nucla, Colorado, to provide controlled air space for aircraft executing the new nondirectional beacon (NDB) "A" approach developed for the Hopkins-Montrose County Airport, Nucla, Colorado.

DATES: Comments must be received on or before August 6, 1980.

ADDRESSES: Send comments on the proposal to: Chief, Air Traffic Division, Attn: ARM-500, Federal Aviation Administration, 10455 East 25th Avenue, Aurora, Colorado 80010.

A public docket will be available for examination by interested persons in the office of the Regional Counsel,

Federal Aviation Administration, 10455 East 25th Avenue, Aurora, Colorado 80010.

FOR FURTHER INFORMATION CONTACT: Robert E. Greene, Airspace and Procedures Specialist, Operations, Procedures and Airspace Branch (ARM-539), Air Traffic Division, Federal Aviation Administration, Rocky Mountain Region, 10455 East 25th Avenue, Aurora, Colorado 80010; telephone (303) 837-3937.

SUPPLEMENTARY INFORMATION:

Comments Invited

Interested persons may participate in the proposed rulemaking by submitting such written data, views, or arguments as they may desire. Communications should be submitted in triplicate to the Chief, Air Traffic Division, Federal Aviation Administration, 10455 East 25th Avenue, Aurora, Colorado 80010. All communications received will be considered before action is taken on the proposed amendment. No public hearing is contemplated at this time, but arrangements for informal conferences with Federal Aviation Administration officials may be made by contacting the Regional Air Traffic Division Chief. Any data, views, or arguments presented during such conferences must also be submitted in writing in accordance with this notice in order to become part of the record for consideration. The proposal contained in this notice may be changed in the light of the comments received.

Availability of NPRM

Any person may obtain a copy of this Notice of Proposed Rulemaking (NPRM) by submitting a request to the Federal Aviation Administration, Office of Public Affairs, Attention: Public Information Center, APA-430, 800 Independence Avenue, SW., Washington, DC 20591, or by calling (202) 426-8058. Communications must identify the notice number of this NPRM. Persons interested in being placed on a mailing list for future NPRM's should also request a copy of Advisory Circular No. 11-2 which describes the application procedure.

The Proposal

The Federal Aviation Administration (FAA) is considering an amendment to subpart G of Part 71 of the Federal Aviation Regulations (14 CFR Part 71) by establishing a 700' and 1,200' transition area at Nucla, Colorado to provide controlled airspace for aircraft executing the new nondirectional beacon (NDB) "A" standard instrument approach procedure developed for the Hopkins-Montrose County Airport, Nucla Colorado.

At present, the Hopkins-Montrose County Airport is visual flight rule (VFR) only. As a result of the new NDB "A" standard instrument approach procedure developed for the Hopkins-Montrose County Airport, it is necessary to change the status of subject airport VFR to instrument flight rule (IFR) and develop a 700' and 1,200' transition area to provide controlled airspace for aircraft executing the NDB "A" standard instrument approach procedure.

It is proposed to make the establishment of the transition areas coincide with the effective date of the standard instrument approach. Accordingly, the Federal Aviation Administration proposes the following amendments to subpart G of Part 71 of the Federal Aviation Regulations (14 CFR Part 71) as follows:

By amending subpart G, § 71.181 so as to establish the following transition areas:

Nucla, Colo.

That airspace extending upward from 700' above the surface within a 9.5 mile radius of the Hopkins-Montrose County Airport (latitude 38°14'20" N., longitude 108°33'44" W.) within 4.5 miles east and 9.5 miles west of the 328° bearing from the Nucla NDB (latitude 38°14'33" N., longitude 108°33'57" W.) extending from the 9.5 mile radius to 18.5 miles northwest; and that airspace extending upward from 1,200' above the surface within the area bounded by a line beginning at latitude 38°34'00" N., longitude 108°19'30" W.; to latitude 37°34'00" N., longitude 108°15'00" W.; to latitude 37°32'30" N., longitude 108°25'00" W.; to latitude 37°57'30" N., longitude 109°00'00" W.; to latitude 38°34'00" N., longitude 109°07'45" W.; to point of the beginning.

Drafting Information

The principal authors of this document are Robert E. Greene, Air Traffic Division, and Daniel J. Peterson, office of the Regional Counsel, Rocky Mountain Region.

This amendment is proposed under authority of section 307(a) of the Federal Aviation Act of 1958, as amended, (49 U.S.C. 1348(a)), and of section 6(c) of the Department of Transportation Act (49 U.S.C. 1655(c)).

Note.—The FAA has determined that this document involves a proposed regulation which is not significant under Executive Order 12044, as implemented by DOT Regulatory Policies and Procedures (44 FR 11034; February 26, 1979). Since this regulatory action involves an established body of technical requirments for which frequent and routine amendments are necessary to keep them operationally current and promote safe flight operations, the anticipated impact is so minimal that this action does not warrant preparation of a regulatory evaluation, and a comment period of less than 45 days is appropriate.

Issued in Aurora, Colorado on June 20, 1980.

Isaac H. Hoover,

Deputy Director, Rocky Mountain Region.

[FR Doc. 80-19624 Filed 7-2-80; 8:45 am]

BILLING CODE 4910-13-M

---

14 CFR Part 71

[Airspace Docket No. 80-WE-8]

Proposed Alteration of Transition Area, Placerville, Calif.

AGENCY: Federal Aviation Administration (FAA), DOT.

ACTION: Notice of proposed rule making.

SUMMARY: This notice proposes to alter a portion of the 700-foot transition area at Placerville, California, so as to provide controlled airspace for instrument procedures at the Placerville Airport.

DATE: Comments must be received on or before July 23, 1980.

ADDRESSES: Send comments on the proposal in triplicate to Director, Federal Aviation Administration, Attn: Chief, Airspace and Procedures Branch, AWE-530, 15000 Aviation Boulevard, Lawndale, California 90261. A public docket will be available for examination in the Office of the Regional Counsel, Federal Aviation Administration, 15000 Aviation Boulevard, Lawndale, California 90261, telephone: (213) 536-6270.

FOR FURTHER INFORMATION CONTACT: Thomas W. Binczak, Airspace and Procedures Branch, Air Traffic Division, Federal Aviation Administration, 15000 Aviation Boulevard, Lawndale, California 90261, telephone: (213) 536-6182.

SUPPLEMENTARY INFORMATION:

Comments Invited

Interested persons may participate in the proposed rule making by submitting such written data, views, or arguments as they may desire. Communications should identify the Airspace Docket Number and be submitted in triplicate to the Chief, Airspace and Procedures Branch, Federal Aviation Administration, 15000 Aviation Boulevard, Lawndale, California 90261. All communications received on or before July 23, 1980, will be considered before action is taken on the proposed amendment. The proposal contained in this notice may be changed in the light of comments received. All comments received will be available both before and after the closing date for comments

in the Rules Docket for examination by interested persons.

Availability of NPRM

Any perons may obtain a copy of this notice of proposed rule making (NPRM) by submitting a request to the Federal Aviation Administration, Chief, Airspace and Procedures Branch, AWE-530, 15000 Aviation Boulevard, Lawndale, California 90261, or by calling (213) 536-6180. Communications must identify the notice number of this NPRM. Persons interested in being placed on a mailing list for future NPRMs should also request a copy of Advisory Circular No. 11-2 which describes the application procedures.

Drafting Information

The principal authors of this document are Thomas W. Binczak, Air Traffic Division and DeWitte T. Lawson, Jr., Esquire, Regional Counsel, Western Region.

The Proposal

The FAA is considering an amendment to Subpart G of Part 71 of the Federal Aviation Regulations (14 CFR Part 71) that would redesignate the Placerville, California 700-foot transition area. This action will provide controlled airspace protection for IFR operations at the Placerville Airport.

The Proposed Amendment

PART 71—DESIGNATION OF FEDERAL AIRWAYS, AREA LOW ROUTES, CONTROLLED AIRSPACE, AND REPORTING POINTS

Accordingly, the Federal Aviation Administration proposes to amend Subpart G, § 71.181 (45 FR 445) of Part 71 of the Federal Aviation Regulations (14 CFR Part 71) by adding the following:

§ 71.181 Placerville, California.

Delete all following . . . "within four miles each side of the . . ." and substitute therein; . . . "Hangtown, California VOR (latitude 38°43'31" N., longitude 120°44'52" W.) 242° radial extending from four mile radius area to eleven miles southwest of the VOR."

(Secs. 307(a) and 313(a), Federal Aviation Act of 1958 (49 U.S.C. 1348(a) and 1354(a)); Sec. 6(c), Department of Transportation Act (49 U.S.C. 1655(c)); and 14 CFR 11.65)

Note.—The FAA has determined that this document involves a proposed regulation which is not significant under Executive Order 12044, as implemented by DOT Regulatory Policies and Procedures (44 FR 11034; February 26, 1979). Since this regulatory action involves an established body of technical requirements for which frequent and routine amendments are necessary to keep them operationally current and promote safe flight operations, the anticipated impact is so minimal that this action does not warrant preparation of a regulatory evaluation and a comment period of less than 45 days is appropriate.

Issued in Los Angeles, California on June 16, 1980.

W. R. Frehse,

Acting Director, Western Region.

[FR Doc. 80-19623 Filed 7-02-80; 8:45 am]

BILLING CODE 4910-13-M

---

14 CFR Part 71

[Airspace Docket No. 80-SO-30]

Proposed Alteration of Transition Area, Brookhaven, Miss.

AGENCY: Federal Aviation Administration (FAA), DOT.

ACTION: Notice of proposed rulemaking.

SUMMARY: This proposed rule will alter the Brookhaven, Mississippi, transition area by lowering the base of controlled airspace northeast of the Brookhaven-Lincoln County Airport from 1,200 to 700 feet AGL. A new public use instrument approach procedure has been developed to serve the airport and the additional controlled airspace is required to protect aircraft executing the approach procedure.

DATES: Comments must be received on or before: August 8, 1980.

ADDRESS: Send comments on the proposal to: Federal Aviation Administration, Chief, Air Traffic Division, P.O. Box 20636, Atlanta, Georgia 30320.

FOR FURTHER INFORMATION CONTACT: John W. Schassar, Airspace and Procedures Branch, Federal Aviation Administration, P.O. Box 20636, Atlanta, Georgia 30320; telephone: 404-763-7646.

SUPPLEMENTARY INFORMATION:

Comments Invited

Interested persons may participate in the proposed rulemaking by submitting such written data, views or arguments as they may desire. Communications should identify the airspace docket number and be submitted in triplicate to the Director, Southern Region, Federal Aviation Administration, Attention: Chief, Air Traffic Division, P.O. Box 20636, Atlanta, Georgia 30320. All communications received on or before August 8, 1980, will be considered before action is taken on the proposed amendment. The proposal contained in this notice may be changed in the light of comments received. All comments submitted will be available, both before and after the closing date for comments, in the Rules Docket for examination by interested persons. A report summarizing each public contact with FAA personnel concerned with this rulemaking will be filed in the public, regulatory docket.

Availability of NPRM

Any person may obtain a copy of this notice of proposed rulemaking (NPRM) by submitting a request to the Federal Aviation Administration, Office of Public Affairs, Attention: Public Information Center, APA-430, 800 Independence Avenue, S.W., Washington, D.C. 20591, or by calling (202) 426-8058. Communications must identify the notice number of this NPRM. Persons interested in being placed on a mailing list for future NPRMs should also request a copy of Advisory Circular No. 11-2 which describes the application procedures.

The Proposal

The FAA is considering an amendment to Subpart G of Part 71 of the Federal Aviation Regulations (14 CFR Part 71) to alter the Brookhaven, Mississippi, transition area. This action will provide controlled airspace protection for aircraft executing the NDB RWY 22 standard instrument approach procedure at the Brookhaven-Lincoln County Airport. The Brookhaven (nonfederal) nondirectional radio beacon, which will support the approach procedure, is established on the airport.

The Proposed Amendment

Accordingly, the Federal Aviation Administration proposes to amend Subpart G, § 71.181 (45 FR 445), of Part 71 of the Federal Aviation Regulations (14 CFR Part 71) as follows:

Brookhaven, Miss.

The present description is deleted and ". . . (That airspace extending upward from 700 feet above the surface within a 5-mile radius of Brookhaven-Lincoln County Airport (Lat. 31°36'20"N., Long. 90°24'00"W.); within 3 miles each side of the 056° bearing from Brookhaven RBN) (Lat. 31°36'23"N., Long. 90°24'36"W.), extending from the 5-mile radius area to 8.5 miles northeast of the RBN . . ." is substituted therefor.

(Sec. 307(a), Federal Aviation Act of 1958, as amended (49 U.S.C. 1348(a)) sec. 6(c), Department of Transportation Act (49 U.S.C. 1655(c)))

Note.—The Federal Aviation Administration has determined that this document involves a proposed regulation which is not significant under Executive Order 12044, as implemented by DOT Regulatory Policies and Procedures (44 FR 11034, February 26, 1979). Since this regulatory action involves an established body of technical requirements for which frequent and routine amendments are necessary to keep them operationally current and promote safe flight operations, the

anticipated impact is so minimal that this action does not warrant preparation of a regulatory evaluation.

Issued in East Point, Ga., on June 23, 1980.

Louis J. Cardinali,

Director, Southern Region.

[FR Doc. 80-19809 Filed 7-2-80; 8:45 am]

BILLING CODE 4910-13-M

---

14 CFR Part 71

[Airspace Docket No. 80-SO-32]

Designation of Federal Airways, Area Low Routes, Controlled Airspace, and Reporting Points; Proposed Designation of Transition Area, Camden, Ala.

AGENCY: Federal Aviation Administration (FAA), DOT.

ACTION: Notice of proposed rulemaking.

SUMMARY: This proposed rule will designate the Camden, Alabama, transition area and will lower the base of controlled airspace in the vicinity of the Camden Municipal Airport from 1,200 to 700 feet to accommodate Instrument Flight Rule (IFR) operations. A public use instrument approach procedure has been developed for the Camden Municipal Airport, and additional controlled airspace is required to protect aircraft conducting IFR operations.

DATES: Comments must be received on or before: August 6, 1980.

ADDRESS: Send comments on the proposal to: Federal Aviation Administration, Chief, Air Traffic Division, P.O. Box 20636, Atlanta, Georgia 30320.

FOR FURTHER INFORMATION CONTACT: John W. Schassar, Airspace and Procedures Branch, Federal Aviation Administration, P.O. Box 20636, Atlanta, Georgia 30320; telephone: 404-763-7646.

SUPPLEMENTARY INFORMATION:

Comments Invited

Interested persons may participate in the proposed rulemaking by submitting such written data, views or arguments as they may desire. Communications should identify the airspace docket number and be submitted in triplicate to the Director, Southern Region, Federal Aviation Administration, Attention: Chief, Air Traffic Division, P.O. Box 20636, Atlanta, Georgia 30320. All communications received on or before August 6, 1980, will be considered before action is taken on the proposed amendment. The proposal contained in this notice may be changed in the light of comments received. All comments submitted will be available, both before and after the closing date for comments, in the Rules Docket for examination by interested persons. A report summarizing each public contact with FAA personnel concerned with this rulemaking will be filed in the public, regulatory docket.

Availability of NPRM

Any person may obtain a copy of this notice of proposed rulemaking (NPRM) by submitting a request to the Federal Aviation Administration, Office of Public Affairs, Attention: Public Information Center, APA-430, 800 Independence Avenue, SW., Washington, D.C. 20591, or by calling (202) 426-8058. Communications must identify the notice number of this NPRM. Persons interested in being placed on a mailing list for future NPRMs should also request a copy of Advisory Circular No. 11-2 which describes the application procedures.

The Proposal

The FAA is considering an amendment to Subpart G of Part 71 of the Federal Aviation Regulations (14 CFR Part 71) to designate the Camden, Alabama, 700-foot Transition Area. This action will provide required controlled airspace to accommodate aircraft performing IFR operations at Camden Municipal Airport. The Wilcox County (nonfederal) nondirectional radio beacon, which will support the approach procedure, is proposed for establishment in conjunction with the transition area.

The Proposed Amendment

Accordingly, the Federal Aviation Administration proposes to amend Subpart G, § 71.181 (45 FR 445), of Part 71 of the Federal Aviation Regulations (14 CFR Part 71) by adding the following:

Camden, Ala.

That airspace extending upward from 700 feet above the surface within a 6.5-mile radius of Camden Municipal Airport (latitude 31°58'49"N., longitude 87°20'13"W.); within 3 miles each side of the 352° bearing from the Wilcox County RBN (latitude 31°58'49"N., longitude 87°20'13"W.), extending from the 6.5-mile radius area to 8.5 miles north of the RBN.

(Sec. 307(a), Federal Aviation Act of 1958, as amended (49 U.S.C. 1348(a)), sec. 6(c), Department of Transportation Act (49 U.S.C. 1655(c)))

Note.—The Federal Aviation Administration has determined that this document involves a proposed regulation which is not significant under Executive Order 12044, as implemented by DOT Regulatory Policies and Procedures (44 FR 11034, February 26, 1979). Since this regulatory action involves an established body of technical requirements for which frequent and routine amendments are necessary to keep them operationally current and promote safe flight operations, the anticipated impact is so minimal that this action does not warrant preparation of a regulatory evaluation.

Issued in East Point, Ga., on June 25, 1980.

Louis J. Cardinali,

Director, Southern Region.

[FR Doc. 80-19807 Filed 7-2-80; 8:45 am]

BILLING CODE 4910-13-M

---

14 CFR Part 71

[Airspace Docket No. 80-AL-6]

Alteration of the Anchorage Transition Area

AGENCY: Federal Aviation Administration (FAA), DOT.

ACTION: Notice of proposed rulemaking.

SUMMARY: This notice proposes to alter the Anchorage, Alaska, Transition Area by designating a 9,500 foot MSL floor area southeast of Anchorage. The proposed action would lower controlled airspace in this area from 14,500 feet. This would provide more efficient air traffic service to the airspace users along with fuel savings by using radar vectoring procedures above 9,500 feet.

DATES: Comments must be received on or before August 4, 1980.

ADDRESSES: Send comments on the proposal in triplicate to:

Director, FAA Alaska Region, Attention: Chief, Air Traffic Division, Docket No. 80-AL-6, Federal Aviation Administration, P.O. Box 14, 701 C Street, Anchorage, Alaska 99513.

The official docket may be examined at the following location:

FAA Office of the Chief Counsel, Rules Docket (AGC-24), Room 916, 800 Independence Avenue, SW., Washington, D.C. 20591.

An informal docket may be examined at the office of the Regional Air Traffic Division.

FOR FURTHER INFORMATION CONTACT: L. Jack Overman, Airspace Regulations Branch (ATT-230), Airspace and Air Traffic Rules Division, Air Traffic Service, Federal Aviation Administration, 800 Independence Avenue, SW., Washington, D.C. 20591; telephone: (202) 426-3715.

Comments Invited

Interested persons may participate in the proposed rulemaking by submitting such written data, views or arguments as they may desire. Communications should identify the airspace docket number and be submitted in triplicate to the Director, Alaskan Region, Attention: Chief, Air Traffic Division, Federal

Aviation Administration, P.O. Box 14, 701 C Street, Anchorage, Alaska, 99513. All communications received on or before August 4, 1980 will be considered before action is taken on the proposed amendment. The proposal contained in this notice may be changed in the light of comments received. All comments submitted will be available, both before and after the closing date for comments, in the Rules Docket for examination by interested persons.

Availability of NPRM

Any person may obtain a copy of this Notice of Proposed Rulemaking (NPRM) by submitting a request to the Federal Aviation Administration, Office of Public Affairs, Attention: Public Information Center, APA-430, 800 Independence Avenue, SW., Washington, D.C., 20591, or by calling (202) 426-8058. Communications must identify the docket number of this NPRM. Persons interested in being placed on a mailing list for future NPRMs should also request a copy of Advisory Circular No. 11-2 which describes the application procedures.

The Proposal

The FAA is considering an amendment to § 71.181 of Part 71 of the Federal Aviation Regulations (14 CFR Part 71) that would alter the Anchorage, Alaska, Transition Area by lowering the floor of controlled airspace to 9,500 feet MSL southeast of Anchorage. The proposed action would lower the transition area floor in the large area from the 090°T(065°M) radial clockwise to the 165°T(140°M) radial within a 172-mile radius of the Anchorage VORTAC. With the planned establishment of an en route ATC radar facility on Middleton Island, this airspace is needed to provide more efficient service to the airspace user. This would be accomplished by radar vectoring and direct flight in controlled airspace above 9,500 feet MSL. Section 71.181 of Part 71 was republished in the Federal Register on January 2, 1980, (45 FR 445).

ICAO Considerations

As part of this proposal relates to the navigable airspace outside the United States, this notice is submitted in consonance with the International Civil Aviation Organization (ICAO) International Standards and Recommended Practices.

Applicability of International Standards and Recommended Practices by the Air Traffic Service, FAA, in areas outside domestic airspace of the United States is governed by Article 12 of, and Annex 11 to, the Convention on International Civil Aviation, which pertains to the establishment of air navigational facilities and services necessary to promoting the safe, orderly, and expeditious flow of civil air traffic. Their purpose is to insure that civil flying on international air routes is carried out under uniform conditions designed to improve the safety and efficiency of air operations.

The International Standards and Recommended Practices in Annex 11 apply in those parts of the airspace under the jurisdiction of a contracting state, derived from ICAO, wherein air traffic services are provided and also whenever a contracting state accepts the responsibility of providing air traffic services over high seas or in airspace of undetermined sovereignty. A contracting state accepting such responsibility may apply the International Standards and Recommended Practices in a manner consistent with that adopted for airspace under its domestic jurisdiction.

In accordance with Article 3 of the Convention on International Civil Aviation, Chicago, 1944, state aircraft are exempt from the provisions of Annex 11 and its Standards and Recommended Practices. As a contracting state, the United States agreed by Article 3(d) that its state aircraft will be operated in international airspace with due regard for the safety of civil aircraft.

Since this action involves, in part, the designation of navigable airspace outside the United States, the Administrator has consulted with the Secretary of State and the Secretary of Defense in accordance with the provisions of Executive Order 10854.

The Proposed Amendment

Accordingly, pursuant to the authority delegated to me, the Federal Aviation Administration proposes to amend § 71.181 of Part 71 of the Federal Aviation Regulations (14 CFR Part 71) as republished (45 FR 445) as follows:

Under Anchorage, Alaska, delete all after "within an 85-mile radius of the Anchorage VORTAC;" and substitute "that airspace extending upward from 9,500 feet MSL within a 172-mile radius of the Anchorage VORTAC extending from the 090° radial clockwise to the 165° radial, excluding the portions within federal airways, Control 1310, Control 1218, the Middleton Island, Alaska, Johnstone Point, Alaska, Cordova, Alaska, and the proposed Valdez, Alaska, transition areas and the Anchorage Oceanic Control Area; and that airspace extending upward from 14,500 feet MSL within a 172-mile radius of the Anchorage VORTAC extending from the 165° radial clockwise to the 090° radial excluding the portions within the United States, federal airways, Control 1218 and the King Salmon, Alaska, Transition Area."

(Secs. 307(a), 313(a), 1110, Federal Aviation Act of 1958 (49 U.S.C. 1348(a), 1354(a), 1510; Executive Order 10854 (24 FR 9565); sec. 6(c), Department of Transportation Act (49 U.S.C. 1655(c)); and 14 CFR 11.65)

Note.—The FAA has determined that this document involves a proposed regulation which is not significant under Executive Order 12044, as implemented by DOT Regulatory Policies and Procedures (44 FR 11034; February 26, 1979). Since this regulatory action involves an established body of technical requirements for which frequent and routine amendments are necessary to keep them operationally current and promote safe flight operations, the anticipated impact is so minimal that this action does not warrant preparation of a regulatory evaluation and a comment period of less than 45 days is appropriate.

Issued in Washington, D.C., on June 26, 1980.

B. Keith Potts,

Acting Chief, Airspace and Air Traffic Rules Division.

[FR Doc. 80-19609 Filed 7-2-80; 8:45 am]
BILLING CODE 4910-13-M

---

14 CFR Part 71

[Airspace Docket Number 80-CE-11]

Transition Area, Newton, Iowa; Proposed Alteration

AGENCY: Federal Aviation Administration (FAA), DOT.

ACTION: Notice of proposed rule making (NPRM).

SUMMARY: This notice proposes to alter the 700-foot transition area at Newton, Iowa, to provide additional controlled airspace for aircraft executing a new instrument approach procedure to the Newton, Iowa, Airport utilizing the Newton, Iowa, VOR as a navigational aid.

DATES: Comments must be received on or before August 10, 1980.

ADDRESSES: Send comments on the proposal to: Federal Aviation Administration, Chief, Operations, Procedures and Airspace Branch, Air Traffic Division, ACE-530, 601 East 12th Street, Kansas City, Missouri 64106, Telephone (816) 374-3408.

The official docket may be examined at the Office of the Regional Counsel, Central Region, Federal Aviation Administration, Room 1558, 601 East 12th Street, Kansas City, Missouri.

An informal docket may be examined at the Office of the Chief, Operations, Procedures and Airspace Branch, Air Traffic Division.

FOR FURTHER INFORMATION CONTACT: Dwaine E. Hiland, Airspace Specialist, Operations, Procedures and Airspace Branch, Air Traffic Division, ACE-537,

FAA Central Region, 601 East 12th Street, Kansas City, Missouri 64106, Telephone (816) 374-3408.

SUPPLEMENTARY INFORMATION:

Comments Invited

Interested persons may participate in the proposed rule making by submitting such written data, views or arguments as they may desire. Communications should identify the airspace docket number, and be submitted in duplicate to the Operations, Procedures and Airspace Branch, Air Traffic Division, Federal Aviation Administration, 601 East 12th Street, Kansas City, Missouri 64106. All communications received on or before August 10, 1980 will be considered before action is taken on the proposed amendment. The proposal contained in this Notice may be changed in light of the comments received. All comments received will be available both before and after the closing date for comments in the Rules Docket for examination by interested persons.

Availability of NPRM

Any person may obtain a copy of this NPRM by submitting a request to the Federal Aviation Administration, Operations, Procedures and Airspace Branch, 601 East 12th Street, Kansas City, Missouri 64106 or by calling (816) 374-3408. Communications must identify the notice number of this NPRM. Persons interested in being placed on a mailing list for further NPRMs should also request a copy of Advisory Circular No. 11-2 which describes the application procedure.

The Proposal

The FAA is considering an amendment to Subpart G, § 71.181, of the Federal Aviation Regulations (14 CFR 71.181) by altering the 700-foot transition area at Newton, Iowa. To enhance airport usage, an additional instrument approach procedure to the Newton, Iowa, Airport is being established utilizing the Newton, Iowa, VOR as a navigational aid. The establishment of this new instrument approach procedure, based on this navigational aid, entails alteration of the transition area at Newton, Iowa, at and above 700 feet above ground level (AGL) within which aircraft are provided air traffic control service. The intended effect of this action is to ensure segregation of aircraft using the approach procedure under Instrument Flight Rules (IFR) and other aircraft operating under Visual Flight Rules (VFR).

Accordingly, Federal Aviation Administration proposes to amend Subpart G, § 71.181 of the Federal Aviation Regulations (14 CFR 71.181) as republished on January 2, 1980 (45 FR 445), by altering the following transition area:

Newton, Iowa

That airspace extending upward from 700 feet above the surface within a 7 mile radius of the Newton, Iowa Airport (latitude 41°40'04"N, longitude 93°01'25"W).

(Sec. 307(a), Federal Aviation Act of 1958 as amended (49 U.S.C. 1348); sec. 6(c), Department of Transportation Act (49 U.S.C. 1655(c)); sec. 11.65, Federal Aviation regulations (14 CFR 11.65))

Note.—The FAA has determined that this document involves a proposed regulation which is not significant under Executive Order 12044, as implemented by DOT Regulatory Policies and Procedures (44 FR 11034; February 26, 1979). Since this regulatory action involves an established body of technical requirements for which frequent and routine amendments are necessary to keep them operationally current and promote safe flight operations, the anticipated impact is so minimal that this action does not warrant preparation of a regulatory evaluation.

Issued in Kansas City, Missouri, on June 20, 1980.

Paul J. Baker,

Director, Central Region.

[FR Doc. 80-19619 Filed 7-2-80; 8:45 am]

BILLING CODE 4910-13-M

---

14 CFR Part 71

[Airspace Docket No. 80-SO-28]

Proposed Designation of Transition Area; Richmond, Ky.

AGENCY: Federal Aviation Administration (FAA), DOT.

ACTION: Notice of proposed rulemaking.

SUMMARY: This proposed rule will designate the Richmond, Kentucky, Transition Area, and will lower the base of controlled airspace in the vicinity of the Madison, Kentucky, Airport from 1200 to 700 feet AGL. A public use standard instrument approach procedure has been developed to the airport, and additional controlled airspace is required to protect aircraft Instrument Flight Rule (IFR) operations.

DATES: Comments must be received on or before: August 10, 1980.

ADDRESS: Send comments on the proposal to: Federal Aviation Administration, Chief, Air Traffic Division, P.O. Box 20636, Atlanta, Georgia 30320.

FOR FURTHER INFORMATION CONTACT: Alton L. Matthews, Airspace and Procedures Branch, Federal Aviation Administration, P.O. Box 20636, Atlanta, Georgia 30320; telephone: 404-763-7646.

SUPPLEMENTARY INFORMATION:

Comments Invited

Interested persons may participate in the proposed rulemaking by submitting such written data, views or arguments as they may desire. Communications should identify the airspace docket number and be submitted in triplicate to the Director, Southern Region, Federal Aviation Administration, Attention: Chief, Air Traffic Division, P.O. Box 20636, Atlanta, Georgia 30320. All communications received on or before August 10, 1980, will be considered before action is taken on the proposed amendment. The proposal contained in this notice may be changed in the light of comments received. All comments submitted will be available, both before and after the closing date for comments, in the Rules Docket for examination by interested persons. A report summarizing each public contact with FAA personnel concerned with this rulemaking will be filed in the public, regulatory docket.

Availability of NPRM

Any person may obtain a copy of this notice of proposed rulemaking (NPRM) by submitting a request to the Federal Aviation Administration, Office of Public Affairs, Attention: Public Information Center, APA-430, 800 Independence Avenue, SW., Washington, D.C. 20591, or by calling (202) 426-8058. Communications must identify the notice number of this NPRM. Persons interested in being placed on a mailing list for future NPRMs should also request a copy of Advisory Circular No. 11-2 which describes the application procedures.

The Proposal

The FAA is considering an amendment to Subpart G of Part 71 of the Federal Aviation Regulations (14 CFR Part 71) to designate the Richmond, Kentucky, 700 foot transition area. This action will provide controlled airspace protection for IFR operations at the Madison, Kentucky, Airport. A standard instrument approach procedure, VOR/DME RWY 18 to the airport, utilizing the Lexington VORTAC, is proposed in conjunction with the designation of the Transition Area. If the proposed designation is acceptable, the airport operating status will be changed from VFR to IFR.

The Proposed Amendment

PART 71—DESIGNATION OF FEDERAL AIRWAYS, AREA LOW ROUTES, CONTROLLED AIRSPACE, AND REPORTING POINTS

Accordingly, the Federal Aviation Administration proposes to amend Subpart G, § 71.181 (45 FR 445), of Part 71 of the Federal Aviation Regulations (14 CFR Part 71) by adding the following:

Richmond, Ky.

That airspace extending upward from 700 feet above the surface within a 7-mile radius of Madison, Kentucky, Airport (latitude 37°37'45"N., Longitude 84°19'56"W.)

(Sec. 307(a), Federal Aviation Act of 1958, as amended (49 U.S.C. 1348(a)); sec. 6(c), Department of Transportation Act (49 U.S.C. 1655(c)))

Note.—The Federal Aviation Administration has determined that this document involves a proposed regulation which is not significant under Executive Order 12044, as implemented by DOT Regulatory Policies and Procedures (44 FR 11034, February 26, 1979). Since this regulatory action involves an established body of technical requirements for which frequent and routine amendments are necessary to keep them operationally current and promote safe flight operations, the anticipated impact is so minimal that this action does not warrant preparation of a regulatory evaluation.

Issued in East Point, Georgia, on June 20, 1980.

George R. LaCaille,

Acting Director, Southern Region.

[FR Doc. 80-19622 Filed 7-2-80; 8:45 am]

BILLING CODE 4910-13-M

DEPARTMENT OF THE TREASURY

Internal Revenue Service

26 CFR Part 1

[LR-1661]

Income Tax; Treatment of Certain Interests in Corporations as Stock or Indebtedness

AGENCY: Internal Revenue Service, Treasury.

ACTION: Extension of time for comments and requests to speak at public hearing.

SUMMARY: This document provides notice of an extension of time for submitting written comments and requests to speak at a public hearing concerning the notice of proposed rulemaking with respect to the treatment of certain interests in corporations as stock or indebtedness.

DATES: Written comments must be delivered or mailed by July 23, 1980. Requests to speak at the public hearing must be received by July 16, 1980.

ADDRESS: Send written comments and requests to speak at the public hearing to Commissioner of Internal Revenue, Attn: CC:LR:T (LR-1661), Washington, D.C. 20224.

FOR FURTHER INFORMATION CONTACT: Charles Hayden of the Legislation and Regulations Division, Office of Chief Counsel, Internal Revenue Service, 1111 Constitution Avenue, N.W., Washington, D.C. 20224, 202-566-3935, not a toll-free call.

SUPPLEMENTARY INFORMATION: By a notice of proposed rulemaking published in the Federal Register for Monday, March 24, 1980 (45 FR 18957), comments and requests for a public hearing with respect to the proposed rules were to be delivered or mailed to the Commissioner of Internal Revenue, Attn: CC:LR:T (LR-1661), Washington, D.C. 20224, by June 23, 1980. The date by which written comments must be delivered or mailed is hereby extended to July 23, 1980.

By a notice of public hearing published in the Federal Register for April 29, 1980 (45 FR 28635), it was announced that a public hearing on the proposed regulations would be held on July 23, 1980, and that persons wishing to be heard were required to submit outlines of their oral presentations by July 9, 1980. No change has been made in the hearing date, and the hearing will take place on July 23, 1980, as announced. While it is desirable for persons wishing to be heard to submit outlines of their oral presentations, such outlines will not be required. However, persons wishing to be heard should submit a written request to that effect, and the request must be received by July 16, 1980.

This document does not meet the criteria for significant regulations set forth in paragraph 8 of the Treasury Directive on improving government regulations appearing in the Federal Register for Wednesday, November 8, 1978.

By direction of the Commissioner of Internal Revenue.

Robert A. Bley,

Director, Legislation and Regulations Division.

[FR Doc. 80-20170 Filed 7-2-80; 8:45 am]

BILLING CODE 4830-01-M

DEPARTMENT OF JUSTICE

Office of Justice Assistance, Research, and Statistics

28 CFR Ch. I

Procedures for Implementing the National Environmental Policy Act

AGENCY: Department of Justice, Office of Justice Assistance, Research, and Statistics.

ACTION: Proposed revised procedures.

SUMMARY: On November 29, 1978, the Council on Environmental Quality (CEQ) promulgated regulations implementing the procedural provisions of the National Environmental Policy Act (NEPA). CEQ required federal agencies to as necessary adopt procedures to supplement their regulations. As a result, the Department of Justice and certain subunits proposed procedures to facilitate compliance with NEPA. 44 FR 43,751 (1979). The final subunit to propose procedures is the Office of Justice Assistance, Research, and Statistics.

DATE: Written comments will be received on these proposed procedures. Comments must be received on or before August 4, 1980.

ADDRESS: Comments should be addressed to Zoe E. Baird, Office of Legal Counsel, Department of Justice, Washington, D.C. 20530.

FOR FURTHER INFORMATION CONTACT: Zoe E. Baird, Office of Legal Counsel, Department of Justice, Washington, D.C. 20530. (202) 633-3712.

SUPPLEMENTARY INFORMATION: The National Environmental Policy Act of 1969 (NEPA), 42 U.S.C. 4321 *et seq.*, requires all federal agencies to give appropriate consideration to environmental effects of their proposed actions in their decisionmaking and to prepare detailed environmental statements on proposals for legislation significantly affecting the quality of the human environment and on other major federal actions significantly affecting the quality of the human environment. CEQ issued regulations to implement the procedural provisions of NEPA (codified at 40 CFR Part 1500-1508, hereafter referred to by section number), under the direction of Executive Order 11991. These regulations require all agencies to prepare supplemental procedures as necessary to implement the regulations (§ 1507.3). The procedures are to be brief

and are to contain only information not already specified in the CEQ regulations but which is necessary to facilitate Department compliance with NEPA.

The Department of Justice has endeavored to assure that where NEPA is applicable, its requirements will be met consistently with the goals of reducing paperwork and delay. Major departmental subunits have reviewed their activities to determine which are covered by NEPA. CEQ has been consulted regularly throughout this process. The Department of Justice has proposed departmentwide procedures and the Bureau of Prisons, the Drug Enforcement Administration and the Immigration and Naturalization Service have developed proposed procedures to supplement the proposed departmentwide procedures for those activities not conducted elsewhere in the Department which necessitate environmental review. 44 FR 43,751 (1979). At the time those procedures were proposed, we stated that the Law Enforcement Assistance Administration was reviewing its existing regulations (28 CFR Part 19) to determine revisions compelled by the new CEQ regulations. That subunit has been reorganized and the procedures proposed by the new Office of Justice Assistance, Research, and Statistics will cover the remaining activities.

The requirements of 5 U.S.C. 553 (informal rulemaking) and Executive Order 12044 (improving government regulations) do not apply to these procedures. The provisions of the Department of Justice and subunit procedures that provide for internal management of NEPA review are exempt under 5 U.S.C. 553(a)(2) and section 6(b)(3) of Executive Order 12044. Other provisions interpret the CEQ regulations in the context of Department activities and are therefore exempt under 5 U.S.C. 553(b)(A) and the Department of Justice's understanding of the coverage of the Executive Order. These regulations are not "significant" within the meaning of section 2(e) of the Executive Order and section III(D) of the Department report on implementation of the Executive Order, 44 FR 30,461.

A comment period of thirty days is being provided.

Dated: June 25, 1980.

Larry A. Hammond,

Deputy Assistant Attorney General, Office of Legal Counsel.

The proposal reads as follows:

Office of Justice Assistance, Research, and Statistics; Procedures Relating to the Implementation of the National Environmental Policy Act

Subpart A—General

§ 1. Authority.

These procedures are issued pursuant to the National Environmental Policy Act (NEPA) of 1969, 42 U.S.C. 4321, *et seq.*, Regulations of the Council on Environmental Quality, 40 CFR Part 1500, *et seq.*, the Environmental Quality Improvement Act of 1970, as amended, 42 U.S.C. 4371, *et seq.*, Section 309 of the Clean Air Act, as amended, 42 U.S.C. 7609, and Executive Order 11514, "Protection and Enhancement of Environmental Quality," March 5, 1970, as amended by Executive Order 11991, March 24, 1977.

§ 2. Purpose.

It is the purpose of these procedures to supplement the procedures of the Department of Justice so as to insure compliance with NEPA. These procedures supersede the regulations contained in 28 CFR Part 19.

§ 3. Agency description.

The Office of Justice Assistance, Research, and Statistics (OJARS) assists State and local units of government in strengthening and improving law enforcement and criminal justice by providing financial assistance and funding research and statistical programs. OJARS will coordinate the activities and provide the staff support for three Department of Justice Federal financial assistance offices: the Law Enforcement Assistance Administration, the National Institute of Justice, and the Bureau of Justice Statistics. Each of the assistance offices has the authority to award grants, contracts and cooperative agreements pursuant to the Justice System Improvement Act of 1979, Pub. L. 96-157 (December 27, 1979).

Subpart B—Implementing Procedures

§ 4. Typical classes of action undertaken.

(a) Actions which normally require an environmental impact statement.

(1) None.

(b) Actions which normally do not require either an environmental impact statement or an environmental assessment.

(1) The bulk of the funded efforts; training programs, court improvement projects, research, gathering statistical data, etc.

(2) Minor renovation projects or remodeling.

(c) Actions which normally require environmental assessments but not necessarily environmental impact statements.

(1) Renovations which change the basic prior use of a facility or significantly change the size.

(2) New construction.

(3) Research and technology whose anticipated and future application could be expected to have an effect on the environment.

(4) Implementation of programs involving the use of chemicals.

(5) Other actions in which it is determined by the Administrator, Law Enforcement Assistance Administration; the Director, Bureau of Justice Statistics; or the Director, National Institute of Justice, to be necessary and appropriate.

§ 5. Agency procedures.

An environmental coordinator shall be designated in the Bureau of Justice Statistics, the Law Enforcement Assistance Administration, and in the National Institute of Justice. Duties of the environmental coordinator shall include:

(a) Insuring that adequate environmental assessments are prepared at the earliest possible time by applicants on all programs or projects that may have a significant impact on the environment. The assessments shall contain documentation from independent parties with expertise in the particular environmental matter when deemed appropriate. The coordinator shall return assessments that are found to be inadequate.

(b) Reviewing the environmental assessments and determining whether an Environmental Impact Statement is required or preparing a "Finding of No Significant Impact."

(c) Coordinating the efforts for the preparation of an Environmental Impact Statement consistent with the requirements of 40 CFR Part 1502.

(d) Cooperating and coordinating efforts with other Federal agencies.

(e) Providing for agency training on environmental matters.

§ 6. Compliance with other environmental statutes.

To the extent possible an environmental assessment shall include information necessary to assure compliance with the following:

Fish and Wildlife Coordination Act, 16 U.S.C. 661, *et seq.*; the National Historic Preservation Act of 1966, 16 U.S.C. 470, *et seq.*; Flood Disaster Protection Act of 1973, 42 U.S.C. 400, *et seq.*; Clean Air Act and Federal Water Pollution Control Act, 42 U.S.C. 1857, *et seq.*; 33 U.S.C. 1251, *et seq.*; Safe Drinking Water Act, 42 U.S.C. 300, *et seq.*; Wild and Scenic Rivers Act, 16 U.S.C. 1271, *et seq.*; the

Coastal Zone Management Act of 1972, 16 U.S.C. 1451, *et seq.*; and other environmental review laws and executive orders.

§ 7. Actions planned by private applicants or other non-Federal entities.

Where actions are planned by private applicants or other non-Federal entities before Federal involvement:

(a) Joan Lewis of the Policy Management and Policy Staff (202)-724-7659) will be available to advise potential applicants of studies or other information foreseeably required for later Federal action;

(b) OJARS will consult early with appropriate State and local agencies and with interested private persons and organizations when its own involvement is reasonably foreseeable;

(c) OJARS will commence its NEPA process at the earliest possible time (Ref. § 1501.2(d) CEQ Regulations).

§ 8. Supplementing an EIS.

If it is necessary to prepare a supplement to a draft or a final EIS, the supplement shall be introduced into the administrative record pertaining to the project. (Ref. § 1502.9(c)(3) CEQ Regulations).

§ 9. Availability of information.

Information regarding status reports on EIS's and other elements of the NEPA process and policies of the agencies can be obtained from: Policy and Management Planning Staff, Office of Criminal Justice Programs, LEAA, Room 1158B, 633 Indiana Avenue, Washington, D.C. 20531, Telephone: 202/724-7659.

[FR Doc. 80-19954 Filed 7-2-80; 8:45 am]
BILLING CODE 4410-18-M

DEPARTMENT OF THE INTERIOR

Office of Surface Mining Reclamation and Enforcement

30 CFR Ch. VII

Permanent Program Submission From the State of Colorado; Correction to Public Hearing Date

AGENCY: Office of Surface Mining Reclamation and Enforcement (OSM), U.S. Department of the Interior.

ACTION: Public review hearing to discuss substantive completeness of the permanent program submission.

SUMMARY: The Federal Register Notice published June 23, 1980, as Vol. 45, No. 122, Pgs. 41969-41971, by the Office of Surface Mining should contain the following corrections to the Denver, Colorado meeting date: Under DATES, change July 18, 1980, at 9 a.m. to July 25, 1980, at 10 a.m. The public hearing will be held at the Denver Public Library, 1357 Broadway, in Denver, Colorado.

DATES: All comments on the program must be received at the adress given below under "ADDRESSES" on or before July 28, 1980, by 9:00 a.m. Comments may also be presented at the public meeting on July 25, 1980.

ADDRESSES: Written comments on Colorado's program must be mailed or hand delivered to Mr. Donald A. Crane, Regional Director, Office of Surface Mining—Region V, 1020—15th Street, Denver, Colorado 80202 weekdays between 8:30 a.m. and 4:30 p.m. Each requestor may receive free of charge, one single copy of Colorado's statutes and regulations from the Regional Director. All comments will be available for inspection at the same address.

FOR FURTHER INFORMATION CONTACT: Ms. Sylvia Sullivan, Public Information Officer, Office of Surface Mining Reclamation & Enforcement, Department of the Interior, Region V, 1020—15th Street, Brooks Towers, Denver, Colorado 80202, Telephone: (303) 837-4731.

Dated: June 30, 1980.

Donald A. Crane,

Regional Director.

[FR Doc. 80-20094 Filed 7-2-80; 8:45 am]
BILLING CODE 4310-05-M

30 CFR Part 732

Public Disclosure of Comments Received From Federal Agencies on the Mississippi State Permanent Program Resubmitted Under Pub. L. 95-87

AGENCY: Office of Surface Mining Reclamation and Enforcement (OSM), U.S. Department of the Interior.

ACTION: Announcement of public disclosure of comments on the Mississippi program from the Tennessee Valley Authority.

SUMMARY: Before the Secretary of the Interior may approve permanent State regulatory programs submitted under Section 503(a) of the Surface Mining Control and Reclamation Act of 1977 (SMCRA), the views of certain Federal agencies must be solicited and disclosed. The Secretary has solicited comments of these agencies and is today announcing their public disclosure.

ADDRESSES: Copies of the comments received are available for public review during business hours at:

Mississippi Department of Natural Resources, Bureau of Geology and Energy Resources, 2525 N. West Street, Jackson, Mississippi 39216, Telephone (601) 354-6228

Office of Surface Mining Reclamation and Enforcement, Region II, Suite 500, 530 Gay Street, S.W., Knoxville, Tennessee 37902, Telephone (615) 637-8060

FOR FURTHER INFORMATION CONTACT: Mr. David C. Short, Regional Director, Office of Surface Mining Reclamation and Enforcement, Region II, Suite 500, 530 Gay Street, S.W., Knoxville, Tennessee 37902, Telephone (615) 637-8060.

SUPPLEMENTARY INFORMATION: The Secretary of the Interior is evaluating the Mississippi permanent regulatory program resubmitted by Mississippi for his review on May 27, 1980. See 44 FR 47173-47174 (August 10, 1979), 44 FR 58000-58001 (October 9, 1979), 44 FR 66760-66761 (November 20, 1979), 45 FR 13780-13781 (March 3, 1980), 45 FR 19268-19277 (March 25, 1980), and 45 FR 37223-37224 (June 2, 1980). In accordance with Section 503(b)(1) of SMCRA and 30 CFR 732.13(b)(1) the Mississippi program may not be approved until the Secretary has solicited and publicly disclosed the views of the Administrator of the Environmental Protection Agency, the Secretary of Agriculture, and the heads of other Federal agencies concerned with or having special expertise relevant to the program as proposed. In this regard, the following Federal agencies were invited to comment on the Mississippi program:

Tennessee Valley Authority
Advisory Council on Historic Preservation
Mine Safety and Health Administration
Appalachian Regional Commission
U.S. Army Corps of Engineers
Water Resources Council
Department of Energy
Department of Agriculture
Bureau of Indian Affairs
Bureau of Land Management
Heritage Conservation and Recreation Service
U.S. Geological Survey
Bureau of Mines
U.S. Fish and Wildlife Service
Environmental Protection Agency

Of these agencies, only the Tennessee Valley Authority forwarded comments. These comments are available for review and copying during business hours at the locations listed above under "Addresses."

Dated: June 24, 1980.

David C. Short,

Regional Director, Region II.

[FR Doc. 80-19943 Filed 7-2-80; 8:45 am]
BILLING CODE 4310-05-M

ENVIRONMENTAL PROTECTION AGENCY

40 CFR Part 52

[FRL 1531-2]

Approval and Promulgation of Nonattainment Plan for Indiana—Particulate Emissions From the Iron and Steel Industry

AGENCY: U.S. Environmental Protection Agency.

ACTION: Proposed rulemaking.

SUMMARY: The purpose of this notice is to announce the receipt of a State Implementation Plan (SIP) revision to control particulate emissions from iron and steel process sources in the State of Indiana, to discuss the results of the United States Environmental Protection Agency's (U.S. EPA) review of this revision and to invite public comment.

DATE: Comments on these revisions and on the proposed U.S. EPA action on the revisions are due by August 4, 1980.

ADDRESSES: Copies of the SIP revisions are available at the following addresses for inspection:

United States Environmental Protection Agency, Region V, Air Programs Branch, 230 South Dearborn Street, Chicago, Illinois 60604.

United States Environmental Protection Agency, Public Information Reference Unit, 401 M Street, S.W., Washington, D.C. 20460.

Indiana State Board of Health, Air Pollution Control Division, 1330 West Michigan Street, Indianapolis, Indiana 46206.

WRITTEN COMMENTS SHOULD BE SENT TO: Cynthia Colantoni, Enforcement Division, U.S. Environmental Protection Agency, Region V, 230 South Dearborn Street, Chicago, Illinois 60604.

FOR FURTHER INFORMATION CONTACT: Cynthia Colantoni, Enforcement Division, U.S. Environmental Protection Agency, Region V, 230 South Dearborn Street, Chicago, Illinois 60604, Telephone 312-353-2076.

SUPPLEMENTARY INFORMATION: On June 26, 1979, the State of Indiana submitted to U.S. EPA a proposed revision of its SIP pursuant to Part D of the Clean Air Act as amended in 1977. The revision applies to areas of Indiana that have not attained the National Ambient Air Quality Standards (NAAQS) for sulfur dioxide, ozone, carbon monoxide, and total suspended particulates (TSP). As required by the Act, the purpose of this revision is to implement measures for controlling the emissions of these pollutants in nonattainment areas and to demonstrate that these measures will provide for attainment of the National Ambient Air Quality Standards as expeditiously as practicable, but not later than December 31, 1982 for the primary standards; or by December 31, 1987, under certain conditions, for ozone and carbon monoxide.

On March 27, 1980, in the context of proposed rulemaking (45 FR 20432) U.S. EPA announced receipt of the Indiana submittal, the results of U.S. EPA's review of that submittal, and invited public comment. Omitted, however, in the announcement was U.S. EPA's review and proposed rulemaking for that portion of the Indiana submittal pertaining to particulate emissions from iron and steel process sources to be regulated under proposed Regulations APC-3, APC-9, and APC-23; and under existing Regulations APC-4R and APC-20. This notice specifically addresses the portion of the Indiana submittal pertaining to TSP emissions from iron and steel process sources.

The requirements for an approvable SIP are described in a Federal Register notice published on April 4, 1979 (44 FR 20372), and are not reiterated in this notice. Supplements to the April 4, 1979 notice were published on July 2, 1979 (44 FR 38583), August 28, 1979 (44 FR 50371), September 17, 1979 (44 FR 53761) and November 22, 1979 (44 FR 67182) discussing, among other things, additional criteria for SIP approval.

On March 3, 1978 (43 FR 8962) and October 5, 1978 (43 FR 45993), pursuant to the requirements of Section 107 of the Clean Air Act (Act) as amended, U.S. EPA designated certain areas in each State as not meeting the NAAQS for TSP, sulfur dioxide (SO_2), carbon monoxide (CO), photochemical oxidants (ozone), and nitrogen dioxide (NO_2).

Part D of the Act, which was added by the 1977 Amendments, requires each State to revise its SIP to meet specific requirements for areas designated as nonattainment. These SIP revisions must demonstrate attainment of the primary NAAQS as expeditiously as practicable, but not later than December 31, 1982. Under certain conditions that date may be extended to December 31, 1987 for ozone and/or carbon monoxide.

On June 26, 1979, the State of Indiana submitted a portion of its revised rules to U.S. EPA so that the Agency could review the plan and solicit public comment both on the plan provisions and on U.S. EPA's proposed rulemaking. The proposed SIP revisions addressed the Clean Air Act requirements for a nonattainment SIP and some general requirements for a statewide SIP.

On March 27, 1980 (45 FR 20432), U.S. EPA discussed the results of its review of the Indiana submittal and invited public comment on the proposed rulemaking. The Federal Register notice set forth in detail the matters under review, the scope of the review, and the deficiencies of the SIP in meeting Part D requirements. Omitted from review in the March 27, 1980 proposed rulemaking was review of Indiana regulations as they affect the iron and steel industry. Since no control strategy demonstrations have been submitted for those non-attainment areas affected by iron and steel sources, this package reviews APC-3, APC-9, and APC-23 under Section 172 only insofar as they purport to constitute reasonably available control technology or to be enforceable.

Specifically, this notice proposes disapproval of APC-3, APC-9, and APC-23 as they affect certain iron and steel sources. We take no action today on the overall acceptability of Indiana's strategy under Section 172 because Indiana has submitted no proposed revisions purporting to meet all the requirements of Part D for those non-attainment areas affected by iron and steel sources. Review of the overall acceptability of an Indiana Part D plan will follow receipt of such a plan including control strategy demonstrations.

In those cases where U.S. EPA's action takes the form of approval, the measures proposed for approval will be in addition to, and not in lieu of, existing SIP regulations. The current emission control regulations for any source will remain applicable and enforceable to prevent a source from operating without controls, or under less stringent controls, while it is moving toward compliance with the new regulations; or if it chooses, challenging the new regulations.

In some instances, the present emission control regulations contained in the federally approved SIP are different from the regulations currently being enforced by the State. In these situations, the present federally approved SIP will remain applicable and enforceable until there is compliance with the newly promulgated and federally approved regulations. Failure of a source to meet applicable pre-existing regulations will result in appropriate enforcement action, including assessment of noncompliance penalties. Furthermore, if there is any instance of delay or lapse in the applicability or enforceability of the new regulations, because of a court order or for any other reason, the pre-existing regulations will be applicable and enforceable. The only exception to this rule is in cases where there is a

conflict between the requirements of the new regulations and the requirements of the existing regulations such that it would be impossible for a source to comply with the pre-existing SIP while moving toward compliance with the new regulations. In these situations, the State may exempt a source from compliance with the pre-existing regulations. Any exemptions granted will be reviewed and acted on by U.S. EPA either as part of these promulgated regulations or as a future SIP revision.

In its review, U.S. EPA specifies portions of the proposed SIP regulations as being approvable and not approvable. U.S. EPA will conditionally approve a regulation if the State proposal cotains minor deficiencies, and if the State provides assurances that it will submit corrections on a specified schedule.

The schedules must be negotiated between the U.S. EPA Regional Office and the State within the public comment period announced in this notice. The negotiated schedules will be announced for public comment in a separate Notice of Proposed Rulemaking. A conditional approval will mean that the restrictions on new major source construction and/or Federal funding will not apply unless the State fails to submit the necessary revisions by the scheduled date, or if the revisions are not approved by U.S. EPA. Conditional approvals will not be granted without strong assurances by the appropriate State official(s) that the deficiencies will be corrected by the specified date.

U.S. EPA solicits comments on both the proposed SIP revisions and the proposed U.S. EPA action on these revisions from all interested parties. U.S. EPA also encourages residents and industries in adjoining States to comment on any interstate air quality impacts of the proposed Indiana SIP revisions.

On August 14, 1979 a Notice of Availability was published in the Federal Register (44 FR 47559) announcing the receipt and availability for review of the proposed revisions to the Indiana SIP including Regulations APC-3, APC-9, and APC-23 relating to particulate emissions from the iron and steel industry and informing the public that a comment period of less than 60 days might be provided. A thirty day comment period is being provided in this notice because the July 1, 1979 statutory deadline for U.S. EPA approval of revisions for nonattainment areas has already passed. To be considered, comments on these revisions and on the proposed U.S. EPA action on these revisions must be postmarked not later than thirty days from the publication of this Notice of Proposed Rulemaking. If, however, interested parties require additional time to comment on U.S. EPA's proposed rulemaking actions, they can petition U.S. EPA at the above address for an extension of the comment period. Requests for extension of the comment period must be received by U.S. EPA prior to the closing of the thirty day comment period announced in this Notice of Proposed Rulemaking.

Total Suspended Particulate Control for the Indiana Iron and Steel Industry—General Comments

Part D of the Clean Air Act requires SIPs to include strategies and regulations adequate to insure attainment of the primary NAAQS as expeditiously as practicable but not later than December 31, 1982, and, in the interim, to provide reasonable further progress toward attainment through the application of reasonably available control technology (RACT) on all stationary sources. EPA has defined RACT as: The lowest emission limitation that a particular source is capable of meeting by the application of control technology that is reasonably available considering technological and economic feasibility.[1] Therefore, depending on site specific considerations, such as geographic constraints, RACT can differ for similar sources.

U.S. EPA believes that the burden of demonstrating that a regulation represents RACT rests on the state. In reviewing a proposed SIP revision to determine its adequacy, U.S. EPA can verify independently that the provisions in the state plan represent RACT. Although U.S. EPA has not specified uniform RACT standards for the iron and steel industry, it has collected data which reflects the emission limitations achieved by various iron and steel sources applying control technology. This data is available for review in the rulemaking docket on this notice at the addresses cited above. Where a state proposes regulations which are not technically supported by U.S. EPA's data, the state must submit adequate data supporting its proposal as representing RACT.

[1] EPA articulated its definition of RACT in a memorandum from Roger Strelow, Assistant Administrator for Air and Waste Management, to Regional Administrators, Regions I-X, on "Guidance for Determining Acceptability of SIP Regulations in Non-attainment Areas." Section 1.a (December 9, 1976), reprinted in (1976) 7 Environmental Reporter, Current Developments (BNA) 1210 col. 2; and in EPA's publication Workshop on Requirements for Non-attainment Area Plans-Compilation of Presentations 154 (OAQPS No. 1.2-103, revised edition April 1978).

In cases where the attainment of NAAQS cannot be demonstrated despite the application of reasonably available control technology to traditional sources of particulate matter such as industrial point and industrial fugitive sources, U.S. EPA will approve State SIPs contingent upon a commitment by the State to:

(1) Study further the causes for particulate nonattainment, including the degree to which nontraditional area sources affect air quality, and (2) develop and submit to U.S. EPA by a date to be negotiated during the comment period additional strategies and enforceable regulations adequate to demonstrate attainment by the statutory attainment date.

To remedy its particulate nonattainment problem associated with its iron and steel industry, the State of Indiana has proposed a control strategy which consists of a revision to Air Pollution Control (APC) Regulation 3 containing visible emission limitations, a new Regulation APC 9 regulating coke oven batteries, a new Regulation APC 23 containing emission limitations for stationary sources of particulates, and reliance on existing Regulations APC 20, and APC 4R. A detailed discussion of Regulations APC-3, APC-9, and APC-23, and U.S. EPA proposed rulemaking is contained below. The technical support which serves as the basis for U.S. EPA's review of these regulations is available for inspection at the addresses listed above.

Aside from APC 9, which specifically addresses particulate emissions from coke batteries statewide, the remainder of the rules affecting other iron and steel sources is comprised of general regulations applicable to a wide range of sources of particulate emissions, rather than a series of regulations controlling other specific steel industry point sources. Therefore, the applicability of these other regulations is dependent upon the location of the source and the classification of the county in which the source is located.

The major iron and steel facilities in Indiana which produce particulate emission are located in Lake, Marion, Porter, and Vigo Counties. Lake, Marion, and Vigo Counties have been designated as nonattainment for both the primary and secondary particulate NAAQS. Porter County is, at the present time designated as unclassified, although it is anticipated that action to reclassify this county will be taken in the near future.

Regulation APC-3—Visible Emission Limitation

Indiana has submitted a proposed revision to Regulation APC-3 which

establishes standards for visible emissions from the operation of any facility in the State. On March 27, 1980, in the context of proposed rulemaking (45 FR 20432), U.S. EPA reviewed, *inter alia*, proposed Regulation APC-3 as it applied to non-iron and steel process sources. Because proposed Regulation APC-3 will control visible emissions emanating from all particulate sources without regard to any classification of these sources by industry, the general deficiencies identified by U.S. EPA in the March 27, 1980 Federal Register are also applicable to iron and steel process sources. Based upon the deficiencies previously identified by U.S. EPA in the above-cited Federal Register notice, U.S. EPA proposes to disapprove proposed Regulation APC-3 for iron and steel sources.

In order to correct the deficiencies in proposed Regulation APC-3 as it applies to iron and steel sources, at a minimum, specific enforceable opacity limitations which represent RACT stringency must be established for those iron and steel processes which are major contributors to the particulate problem in the State of Indiana, including but not limited to, basic oxygen furnace roof monitors, electric arc furnace roof monitors, blast furnace casthouses, sinter plant discharge end and materials handling operations, and open hearth shop roof monitors. Technical information is available in the rulemaking docket on this notice concerning opacity limitations for traditional iron and steel sources. Also included in the docket is information which EPA uses to define acceptable mass standards which are a necessary complement to these opacity limitations.

Regulation APC-9—Coke Oven Batteries

Indiana has submitted a new Regulation APC 9 which establishes emission limitations and inspection procedures for by-product coke oven batteries. This regulation applies to all coke oven batteries for which construction or modification commerced prior to the July 19, 1979 State promulgation date of this regulation. Emission limitations for coke oven batteries which commence construction or modification after the State promulgation date of the regulation will be established as conditions of construction and operating permits issued under the provisions of Regulation APC 19. U.S. EPA has reviewed APC-9 and proposes to disapprove it as a revision to the federally-approved SIP for the following deficiencies:

1. This regulations contains compliance schedules for certain coke oven emission sources including the charging system, charge port lids, offtake piping, gas collector mains and oven doors leading to ultimate compliance with visible emission limitations by July 1, 1982. The compliance schedules include four interim increments of progress commencing on July 1, 1979, specifying reductions in visible emissions to be accomplished on a yearly basis, and culminating in the achievement of the final standards in July of 1982. The accompanying compliance schedules may not satisfy the requirement of Section 172 of the Clean Air Act that the SIP provide for attainment of the NAAQS as expeditiously as practicable and provide for reasonable further progress toward attainment (including significant emission reductions in the early years following plan approval). Numerous coke oven emission sources in Indiana have already installed the type of equipment required and have implemented the operating and maintenance practices that would be necessary to achieve the visible emissions requirements in proposed Regulation APC 9 as a means of complying with the July 1975 final compliance dates of the existing federally-approved regulations which are applicable to coke oven batteries, APC 3, the visible emissions regulation, and APC 5, the process weight regulation. As an example, all operators of wet coal charged coke ovens have installed steam aspiration systems to implement the stage charging practice.

As discussed in the April 4, 1979 Federal Register (44 FR 20372), the 1977 Amendments to the Clean Air Act allow added time for previously regulated sources to meet more stringent requirements and previously unregulated sources to meet new requirements. They were not intended to allow more time to meet existing requirements or be used to permit relaxation of existing controls. To cure this deficiency the State must substantiate a clear need for the additional time allowed by the schedules to achieve compliance with the emission limitations in the regulation.

2. U.S. EPA believes that APC-9, Section 3 which prohibits visible emissions from more than 10 percent of the total oven doors of operating coke ovens is supportable by current data, and that a further exclusion of a maximum of two door is also merited by this data. However, U.S. EPA does not believe that Indiana's proposal to exempt an additional 4 doors over the 10 percent constitutes an acceptable level of control. Furthermore, both the door emission limitation outlined in § 3(a)(6), and the door emissions testing procedure specified in § 5(c)(1) must be clarified to reflect the concept that visible emissions observations of door emissions must be based upon total operating coke ovens rather than the total number of coke oven doors irrespective of oven operational status.

3. APC 9, Section 5 provides an inspection procedure for coke oven batteries as well as test methods to determine compliance. The Indiana rule regulates visible emissions from the charging system, which includes any open charge port, offtake system, mobile jumper pipe or larry car, by limiting the cumulative time such emissions are visible during five consecutive charging periods. The inspection procedure outlined in Section 5(a)(1) is unclear as to whether the recorded observations from an entire set of consecutive charges must be discarded when such observations are interrupted by an event not in the control of the observer, or whether only those individual interrupted charges must be discarded.

The regulation further provides that one charge out of twenty consecutive charges can be exempted from the total seconds of charging emissions provided that the inspector is informed of the charge to be exempted at the time of his inspection. U.S. EPA believes that the provision in the regulation which permits the exemption of one charge out of twenty consecutive charges needs clarification for a number of reasons. The regulation is unclear as to what constitutes consecutive charges for the purposes of performing visible emissions observations. The regulation should indicate whether this term refers to charges which are consecutively observed by a certified reader, or charges which are consecutively occurring. In addition the regulation does not identify the individual responsible for informing the inspector of the charge selected for the exemption. Furthermore, the regulation specifies that the inspector must be informed of the charge to be exempted at the time of his inspection, but further clarification is required to ascertain whether the exemption must be designated immediately after the inspector completes his observation of twenty consecutive charges, or whether the selection can be made after the observer completes all of his visible emissions observations at the battery under scrutiny. This raises a further issue of whether this regulation imposes a duty

upon the observing agency to supply the battery operator with completed visible emissions observation forms at the time of the inspection in order to facilitate selection of the exempted charges. Perhaps most importantly, there is no data reduction method specified for use in conjunction with the exemption. The State must clarify whether it contemplates treating the exempted charge as if it had not occurred at all, or whether some other data reduction method is intended.

4. The regulation contains restrictions on visible emissions from quench towers serving existing coke oven batteries for which construction commenced prior to the July 19, 1979 State promulgation date of this regulation. Visible emissions are prohibited from the quenching of coke with the direct application of water to hot coke unless quenching is conducted under a tower equipped with "efficient baffles" to impede the release of particulates into the atmosphere. U.S. EPA believes that this provision will be difficult to enforce since there is no definition of what constitutes an efficient baffle. To correct this deficiency the state must define "efficient baffles" in regulation APC 1, or in the body of APC 9 itself.

5. Regulation APC 9 proposes to control the quality of water utilized to quench coke. Section 3(a)(8) specifies that the quench water make-up must contain a total dissolved solids (TDS) content of no more than 1500 milligrams per liter.

U.S. EPA has determined that there is a relationship between the quality of water used to quench incandescent coke and the quantity of emissions generated by the quenching process. Empirical data in the docket on this rule indicates that the quantity of total dissolved solids in quench water is approximately two times the concentration of total dissolved solids in the make-up water. Therefore, the proposed Indiana standard, 1500 mg/l TDS in the make-up water, is roughly equivalent to 3000 mg/l TDS in the quench water. U.S. EPA's technical information indicates that quench water with 1000–1325 milligrams per liter TDS represents a standard achievable with reasonably available control technology.

Under the existing Indiana SIP, coke plant quench towers are regulated by the process weight regulation, APC 5. APC 5 prohibits any person from operating any process so as to produce, cause, suffer or allow particulate matter to be emitted in excess of the amount shown in the accompanying table. U.S. EPA has determined that the process weight rates specified in APC 5 constitute an acceptable level of control for coke plant quench towers. However, EPA also believes that a limitation regarding quantity of total dissolved solids in either the make-up water or the quench water which is directly applied to the hot coke, which falls within the range indicated above represents a valuable tool to aid in the daily enforcement of any regulation covering quench towers.

6. Regulation APC 9 provides that particulate emissions from underfire stacks are limited by the emission limitations determined pursuant to Regulations APC 4R and APC 23. The emission limitation specified in APC 23, of 0.030 gr/dscf is sufficient to be considered an acceptable level of control for underfire stacks.

Under the alternate scheme proposed by APC 9, and because no county containing a coke battery is presently subject to APC–23, emissions from coke oven underfire stacks would be controlled by APC 4R. Regulation APC 4R, limiting particulate emissions from the combustion of fuel in stationary equipment for indirect heating, is part of the current federally approved SIP.

We calculate Regulation 4R to amount to a limit of 0.3 grains per dry standard cubic foot. U.S. EPA's technical information contained in the docket on this rulemaking indicates that underfire stack emissions falling within the range of 0.020–0.050 grains per dry standard cubic foot, accompanied by an equivalent opacity standard, represents that degree of control available through the application of reasonably available control technology. To correct this deficiency the State of Indiana must submit revisions to the federally-approved SIP which constitute RACT for underfire stacks.

7. Section 5(d) of the proposed revision contains a typographical error which must be corrected. The regulation states that the test for determining the amount of particulate matter emitted from a facility subject to a grain loading or process weight limitation in this regulation must be conducted in accordance with the procedures set forth in Methods 1–5, Appendix B of 40 CFR Part 60, revised as of August 19, 1977. The correct citation should be to Appendix A. The legal consequence of citing Reference Methods 1–5 incorrectly is to eliminate entirely the test methods specified for determining the quantity of particulate matter emitted from facilities subject to this regulation.

U.S. EPA notes that Section 5(b) of this regulation requires that compliance regarding topside emissions be measured by walking down the middle of the coke oven battery. While U.S. EPA will not disapprove the provision on this basis, it does caution the State about the potential safety hazard inherent in this method of monitoring compliance.

8. In Section 5(d), APC 9 provides that testing to determine the amount of particulate matter emitted from any facility subject to a grain loading or process weight limitation shall be conducted "in accordance with procedures set forth in Methods 1–5, Appendix B (sic) of 40 CFR, Part 60 * * * or other procedures approved by the Board." This regulation could be read to permit the State to enact into law alternative methods for testing compliance with particulate standards other than Reference Methods 1–5, 40 CFR, Part 60, which need not be approved by U.S. EPA in order to have legal effect as part of the State Implementation Plan. Such a provision contravenes the general scheme of the Clean Air Act and specifically ignores the language of 40 CFR Part 51.6(d) which obligates a State to submit to U.S. EPA any State action which purports to modify the requirements of an applicable State Implementation Plan. To correct this deficiency the State must make a commitment to ensure that any other procedures approved by the Board pursuant to this section which the State intends to become part of the federally approved SIP will be submitted to U.S. EPA as a revision to the SIP in accordance with 40 CFR Part 51.6(d).

9. Regulation APC 9 requires that all coke oven batteries be equipped with a device capable of capturing and collecting coke-side particulate matter, and that this device be designed and operated in compliance with an operating permit to collect 90% of the pushing emissions. However, the rule does not specify a method of measuring whether the device in fact captures 90% of the emissions, and is therefore unenforceable.

From a practical viewpoint, it is exceedingly difficult to measure whether a device is actually capturing 90% of the pushing emissions. The only known method of ascertaining the level of escaping emissions is highly subjective because an observer records the level of visible emissions emanating from an uncontrolled pushing operation, and later compares this reading with the performance of the pushing control device in operation. This determination which, in all probability, would not accurately and consistently reflect the performance of the pushing control device is further complicated by the fact that no two ovens emit identical emissions such that a valid comparison between uncontrolled and controlled

operations can be made. Further, the emissions from any single oven will vary from push to push depending upon a variety of factors, including the greenness of the push, the positioning of the observer and the geometry of the control device. Furthermore, some technology for controlling pushing emissions tightly hoods the hot coke, rendering the visibility of smoke generation prior to capture impossible.

To correct this deficiency the State must provide a method of observing and evaluating capture efficiency from the pushing operation. In the alternative the State may substitute an opactiy standard along with an appropriate observation method.

10. Regulation APC 9 provides for the control of gas collector main emissions and specifies that visible emissions shall not emanate from more than a certain number of points on the gas collector main, in accordance with a three year schedule. However, the regulation does not specify a means of determining compliance with this regulation which renders the regulation unenforceabale. To correct this deficiency the State must specify an enforceable method of determining compliance with this provision. U.S. EPA suggests that the inspection procedure for determining compliance be developed and incorporated into Section 5(b) which controls topside emissions.

11. Regulation APC 9 provides that in the recording of the source of topside visible emissions, visible emissions from charge port lids that are opened during a decarbonization period shall not be counted. There is no limit to the number of charge port lids which may be exempted from the count.

To correct this deficiency the State must limit the number of charge port lids which may be exempted from this count.

Regulation APC-23—Stationary Source Particulate Emission Limitations

The State of Indiana has proposed a new Regulation APC-23 which contains particulate emission limitations for all stack and non-stack facilities having a potential to emit 100 tons of particulate matter per year or actual particulate emissions of 10 tons per year which are located in Dearborn, Dubois, and Wayne Counties and for specified sources in Shelby County. Regulation APC-23 does not apply to the primary nonattainment areas of Lake, Marion, Vigo, and Laporte Counties. On March 27, 1980, in the context of proposed rulemaking (45 FR 20432), U.S. EPA reviewed, among other things, proposed Regulation APC-23, as to the nonattainment counties to which the regulation had been made applicable.

The focus of today's proposed rulemaking is to review Indiana's regulations pertaining to the iron and steel industry. The major iron and steel facilities in Indiana which produce particulate emissions are located in Lake, Marion, Porter and Vigo Counties. As presently submitted for approval by the State of Indiana, APC-23 does not cover the nonattainment areas of Lake, Marion or Vigo Counties, neither does it regulate emissions in Porter County which is presently designated as unclassified, for which no Part D submittal is required. No rulemaking can therefore be proposed on this regulation today in regard to the adequacy of the regulations or the attainment demonstrations for Lake, Marion and Vigo Counties as they relate to the iron and steel industry.

U.S. EPA reiterates that federally-approved State Implementation Plan Regulations APC-3 and APC-5 remain in full force and effect.

Interested persons are invited to comment on the proposed Indiana regulations and on U.S. EPA's proposed action. Comments should be submitted to the address listed in the front of this Notice. Public comments received within 30 days of publication will be considered in U.S. EPA's final rulemaking on the Regulations discussed herein. All comments received will be available for inspection at Region V's Enforcement Division offices, 230 South Dearborn Street, Chicago, Illinois 60604.

Under Executive Order 12044 (43 FR 12661), U.S. EPA is required to judge whether a regulation is "significant," and, therefore, subject to certain procedural requirements of the Order, or whether it may follow other specialized development procedures. U.S. EPA labels these other regulations, "specialized." I have reviewed this proposed regulation pursuant to the guidance in the U.S. EPA's response to Executive Order 12044, "Improving Environmental Regulations," signed March 29, 1979, by the Administrator and I have determined that it is a specialized regulation not subject to the procedural requirements of Executive Order 12044.

This Notice of Proposed Rulemaking is issued under the authority of Sections 110(a) and 172 of the Clean Air Act, as amended (42 U.S.C. 7410(a), 7502).

Dated: June 23, 1980.

John McGuire,

Regional Administrator.

[FR Doc. 80-20048 Filed 7-2-80; 8:45 am]

BILLING CODE 6560-01-M

40 CFR Part 52

[FRL 1531-3]

Conditional Approval of Nonattainment Plan for Wisconsin—Particulate Matter Emissions From the Iron and Steel Industry: Coke Oven Batteries

AGENCY: U.S. Environmental Protection Agency.

ACTION: Proposed rulemaking.

SUMMARY: The purpose of this notice is to announce the receipt of a revision to the State Implementation Plan (SIP) which concerns the control of particulate matter emissions from coke oven batteries in the State of Wisconsin, to discuss the results of the United States Environmental Protection Agency's (U.S. EPA) review of this revision and to invite public comment.

DATE: Comments on this revision and on the proposed U.S. EPA action on the revisions are due by August 4, 1980.

ADDRESSES: Copies of the SIP revision are available at the following addresses for inspection:

United States Environmental Protection Agency, Region V, Air Enforcement Branch, 230 South Dearborn Street, Chicago, Illinois 60604.

United States Environmental Protection Agency, Public Information Reference Unit, 401 M Street, S.W., Washington, D.C. 20460.

Wisconsin Department of Natural Resources, Bureau of Air Management, 101 South Webster, Madison, Wisconsin 53707.

WRITTEN COMMENTS SHOULD BE SENT TO: Cynthia Colantoni, Enforcement Division, U.S. Environmental Protection Agency, Region V, 230 South Dearborn Street, Chicago, Illinois 60604.

FOR FURTHER INFORMATION CONTACT: Cynthia Colantoni, Enforcement Division, Telephone (312) 353-2070.

SUPPLEMENTARY INFORMATION: On November 27, 1979, the Secretary of the Wisconsin Department of Natural Resources (DNR) submitted to U.S. EPA a proposed revision to its SIP pursuant to Part D of the Clean Air Act (the Act) as amended in 1977. The revision applies to areas of Wisconsin that have not attained the National Ambient Air Quality Standards (NAAQS) for sulfur dioxide, ozone, carbon monoxide, and total suspended particulate matter (TSP). As required by the Act, the purpose of this revision is to implement measures for controlling the emissions of these pollutants in nonattainment areas and to demonstrate that these measures will provide for attainment of the NAAQS as expeditiously as

practicable, but not later than December 31, 1982, for the primary standard; or by December 31, 1987, under certain conditions, for ozone and carbon monoxide.

On April 4, 1980, in the context of proposed rulemaking (45 FR 22982), U.S. EPA announced receipt of the Wisconsin submittal, the results, of U.S. EPA's review of that submittal, and invited public comment. Omitted, however, in the announcement was U.S. EPA's review and proposed rulemaking for that portion of the Wisconsin submittal pertaining to particulate matter emissions from coke oven batteries, to be regulated under NR 154.11(2)(b) 4.c.

The requirements for an approvable SIP are described in a Federal Register notice published on April 4, 1979 (44 FR 20372), and are not reiterated in this notice. This notice specifically addresses that portion of the Wisconsin submittal pertaining to TSP emissions from coke oven batteries.

Supplements to the April 4, 1979, notice were published on July 2, 1979 (44 FR 38583), August 28, 1979 (44 FR 50371), September 17, 1979 (44 FR 53761) and November 23, 1979 (44 FR 67182) discussing, among other things, additional criteria for SIP approval.

On March 3, 1978 (43 FR 8962), and October 5, 1978 (43 FR 45993), pursuant to the requirements of Section 107 of the Act as amended, U.S. EPA designated certain areas in each State as not meeting the NAAQS for TSP, sulfur dioxide (SO_2), carbon monoxide (CO), photochemical oxidants (ozone), and nitrogen dioxide (NO_2).

Part D of the Act, which was added by the 1977 Amendments, requires each State to revise its SIP to meet specific requirements for areas designated as nonattainment. These SIP revisions must demonstrate attainment of the primary NAAQS as expeditiously as practicable, but not later than December 31, 1982. Under certain conditions that date may be extended to December 31, 1987, for ozone and/or carbon monoxide.

In response to these requirements, on July 12, 1979, the Secretary of the DNR submitted to U.S. EPA revisions to the Wisconsin SIP. On September 4, 1979, the Secretary submitted additional background material. On November 27, 1979, the Secretary submitted all of Wisconsin's air regulations which were effective as of the date of submittal. The proposed SIP revision addressed the requirements of the Act for a nonattainment SIP and some general requirements for a Statewide SIP.

On April 4, 1980 (45 FR 22982), U.S. EPA discussed the results of its review of the Wisconsin submittal and invited public comment on the proposed rulemaking. The Federal Register notice set forth in detail the matters under review, the scope of the review, and the deficiencies of the SIP in meeting Par D requirements. Omitted from review in the April 4, 1980, proposed rulemaking was that portion of Wisconsin's particulate matter control strategy for the iron and steel industry dealing specifically with coke oven batteries. The proposed rulemaking today addresses the previously omitted review of NR 154.11 and invites public comment on U.S. EPA's review and proposed action.

The measures proposed for conditional approval today will be in addition to, and not in lieu of, existing SIP regulations. The current emission control regulations for any source will remain applicable and enforceable to prevent a source from operating without controls, or under less stringent controls, while it is moving toward compliance with the new regulations; or if it chooses, challenging the new regulations. In some instances, the present emission control regulations contained in the federally-approved SIP are different from the regulations currently being enforced by the State. In these situations, the present federally-approved SIP will remain applicable and enforceable until there is compliance with the newly promulgated and federally-approved regulations. Failure of a source to meet applicable pre-existing regulations will result in appropriate enforcement action, including assessment of noncompliance penalties. Furthermore, if there is any instance of delay or lapse in the applicability of enforceability of the new regulations, because of a court order or for any other reason, the pre-existing regulations will be applicable and enforceable.

The only exception to this rule is in cases where there is a conflict between the requirements of the new regulations and the requirements of the existing regulations such that it would be impossible for a source to comply with the pre-existing SIP while moving toward compliance with the new regulations. In these situations, the State may exempt a source from compliance with the pre-existing regulations. Any exemptions granted will be reviewed and acted on by U.S. EPA either as part of these promulgated regulations or as a future SIP revision.

In its review, U.S. EPA has specified portions of the proposed SIP regulations as being approvable and not approvable. U.S. EPA will conditionally approve a regulation if the State proposal contains minor deficiencies, and if the State provides assurances that it will submit corrections on a specified schedule. The schedules must be negotiated between the U.S. EPA Regional Office and the State within the public comment period announced in this notice. The negotiated schedules will be announced for public comment in a separate Notice of Proposed Rulemaking. A conditional approval will mean that the restrictions on new major source construction and/or Federal funding will not apply unless the State fails to submit the necessary revisions by the scheduled date, or if the revisions are not approved by U.S. EPA. Conditional approvals will not be granted without strong assurances by the appropriate State official(s) that the deficiencies will be corrected by the specified date.

U.S. EPA solicits comments on both the proposed SIP revision and the proposed U.S. EPA action on this revision from all interested parties. U.S. EPA also encourages residents and industries in adjoining States to comment on any interstate air quality impacts of the proposed Wisconsin SIP revision.

Total Suspended Particulate Matter Control for the Wisconsin Iron and Steel Industry—General Comments

Part D of the Clean Air Act requires SIPs to include strategies and regulations adequate to insure attainment of the primary NAAQS as expeditiously as practicable but not later than December 31, 1982, and, in the interim, to provide reasonable further progress toward attainment through the application of reasonably available control technology (RACT).

In cases where the attainment of NAAQS cannot be demonstrated despite the application of reasonably available control technology to traditional sources of particulate matter such as industrial point and industrial fugitive sources, U.S. EPA will approve State SIPs contingent upon a commitment by the State to (1) study further the causes for particulate matter nonattainment, including the degree to which nontraditional area sources affect air quality, and (2) develop and submit to U.S. EPA by a date to be negotiated during the comment period additional strategies and enforceable regulations adequate to demonstrate attainment by the statutory attainment date.

To remedy its particulate matter nonattainment problem associated with its iron and steel industry, the State of Wisconsin has proposed a control strategy which consists of a new regulation, NR 154.11(2)(b) 4.c., which

contains visible emission limitations and fugitive emission limitations for coking operations; NR 154.11(3)(c) 2., which contains an emission limitation for coke oven combustion stacks; and NR 154.11(6)(a) 1., which contains visible emission limitations for coke oven combustion stacks. A detailed discussion of these regulations and U.S. EPA proposed rulemaking is contained below. The technical support which serves as the basis for U.S. EPA's review of this regulation is available for inspection at the addresses listed above.

NR 154.11(2)(b) 4.c.—Coke Oven Batteries

Wisconsin has submitted a new NR 154.11(2)(b) 4.c. which establishes fugitive and visible emission limitations and inspection procedures for by-product coke oven batteries. This regulation applies to all coke oven batteries located in a primary or associated secondary nonattainment area identified under NR 154.03(1) for suspended particulate matter and to all coke oven batteries located near such areas whose aggregate fugitive dust emission may cause an impact on the ambient air quality in such areas equal to or greater than one microgram per cubic meter (annual concentration) or 5 micrograms per cubic meter (maximum 24-hour concentration). NR 154.11(2)(b).

U.S. EPA has reviewed NR 154.11(2)(b) 4.c. and proposes to conditionally approve it as a revision to the federally-approved SIP for the following reasons:

1. *Coke Oven Charging Emissions.* NR 154.11(2)(b) (4.c. 1) provides that during charging to the oven there shall be no visible emissions beyond one meter from the charging ports except for 125 seconds during 5 consecutive oven charges. U.S. EPA believes that without the one-meter exemption the provision in the regulation which permits the exemption of 125 seconds during 5 consecutive oven charges is approvable and represents RACT for coke oven charging. However, U.S. EPA cannot approve the one meter portion of the regulation for two reasons. First, since Wisconsin has not submitted data to support such a provision, there is no technical support for it because U.S. EPA's data is based on all emissions and not on emissions one meter away from the ports. Secondly, the one meter provision appears difficult to enforce in that there is no way that an observer can be certain that he is reading one meter away from the port.

In addition, no visible emissions reading methodology is specified for coke oven charging emissions. U.S. EPA has provided an example of an approvable, enforceable method for determining visible emissions from charging ports to the DNR. A copy of this document appears in the U.S. EPA docket. Therefore, U.S. EPA proposes to conditionally approve this portion of the regulation if during the comment period the DNR commits to a schedule for (1) submitting an approvable, enforceable method for determining visible emissions from coke ovens during charging and (2) submitting data supporting inclusion of the one meter provision as RACT or eliminating that provision.

2. *Coke Oven Pushing Emissions.* NR 154.11(2)(b) (4.c. 2) requires that coke oven batteries be equipped with a travelling hood capable of capturing and collecting coke-side particulate matter and that this device be designed and operated to control fugitive emissions to not more than 0.08 pounds of particulate matter per 1000 pounds of exhaust gas. This portion of the regulation is approvable by U.S. EPA since the emission limitation contained in it represents RACT.

The regulation also provides that visible emissions which escape capture by the travelling hood shall not exceed 20% opacity for each pushing operation. Although this opacity limit represents RACT, it must apply as an absolute limit. The averaging of visible emissions observations during the pushing operation may not require any degree of control because the term "pushing operation" is not defined. On the one hand, if the pushing operation is meant to include the period beginning with removal of the coke-side door of the oven to be pushed to the time the quench car enters the quench tower, then the duration of the intense emission generation (during the approximately 40 seconds of coke fall) is a small fraction of the total pushing operation. On the other hand, visible emissions do occur during the periods of quench car travel to the quench tower. Therefore, regulation of such emissions by an absolute opacity limitation is necessary. U.S. EPA believes it necessary for the DNR to establish the limitation on an instantaneous, not time-averaged, basis.

NR 154.11(2)(b) (4.c. 2) specifies no mass testing methodology for coke oven pushing. U.S. EPA has provided an example of an approvable, enforceable test method to the DNR. A copy of this document appears in the U.S. EPA docket.

In addition, NR 154.11(2)(b) (4.c. 2) contains no visible emissions reading methodology for the pushing operation. U.S. EPA has provided an example of an approvable, enforceable method for determining visible emissions during pushing to the DNR. A copy of this document appears in the U.S. EPA docket. U.S. EPA proposes to conditionally approve this portion of the regulation if during the comment period the DNR commits to a schedule for submission of (1) an approvable, enforceable method for determining visible emissions from coke oven doors during pushing, (2) an approvable, enforceable mass testing methodology for coke oven pushing, (3) a definition of "pushing operation", and (4) clarification of the 20% capacity limit as an absolute limit.

3. *Coke Oven Door Emissions.* NR 154.11(2)(b) (4.c. 3) requires that there shall be no visible emissions from 90% of the doors of all coke ovens in use except those open for charging, pushing, cleaning, and maintenance as determined by a one pass observation. Although this portion of the regulation represents RACT, it does not contain a definition of "coke oven door." A definition is necessary to avoid ambiguity in the application of the regulation. For example, if "door" includes chuck doors on the push side of the oven, the proposed standard is effectively relaxed. Also, it is not clear whether the proposed standard applies to all batteries at a specific plant or each battery at a specific plant. These uncertainties create sufficient ambiguity to make this standard potentially unenforceable. An effective definition of door or door area should include a description of that portion(s) of the battery regulated, and any applicable exemptions, if appropriate.

In addition, no inspection technique is specified. Effective enforcement of an emission standard or limitation requires a precise inspection technique. Such a technique should include a description of the emissions to be observed, where the observations are to be made, and whether the observations are sequential. Although compliance by coke oven doors can be assessed by a one pass observation, observation of doors, lids, and offtake pipes is impossible during one pass. U.S. EPA has provided an example of an approvable, enforceable method for determining opacity from coke oven doors to the DNR. A copy of this document appears in the U.S. EPA docket.

Therefore, U.S. EPA proposes to conditionally approve this portion of the regulation if during the comment period the DNR commits to a schedule for submission of a definition of "coke oven door" and an approvable, enforceable inspection technique.

4. *Coke Oven Lid Emissions.* NR 154.11(2)(b) (4.c. 3) requires that there shall be no visible emissions from 95%

of all coke oven charging port lids except those open for charging, pushing, cleaning, and maintenance as determined by a one pass observation. Although this portion of the regulation represents RACT, it does not contain a definition of "charging port lids." A definition of coke oven charging port lids is necessary to enable an observer to make consistent judgment about the type of emissions that are being observed. Also, because the standard is a percentage of total lids, it is necessary to specify which lids are counted. For example, it is not clear whether the proposed standard applies to all batteries at a specific plant or each battery at a specific plant. Further, it is not clear whether the proposed standard applies to coke ovens not in use or to all ovens regardless of operational status. These uncertainties create sufficient ambiguity to make the standard potentially unenforceable. A definition should also include a statement concerning whether oven openings used solely for the purpose of drafting charging emissions into a near-by oven through a jumper pipe are within the scope of the regulation. The operational status of the oven lids observed should also be stated in the regulation itself.

In addition, no inspection technique is specified. Effective enforcement of an emission standard or limitation requires a precise inspection technique. Such a technique should include a description of the emissions to be observed, where the observations are to be made, and whether the observations are sequential. An effective inspection technique requires the observer to record the identification of the battery, the points of emission from each oven and the oven number, the number of operating ovens, and all oven charging ports open to the ambient air. Exemptions, if any, should be carefully articulated. Although compliance by coke oven charging port lids can be assessed by a one pass observation, observation of doors, lids, and off-take pipes is impossible during one pass. U.S. EPA has provided an example of an approvable, enforceable method for determining opacity from coke oven lids to the DNR. A copy of this document appears in the U.S. EPA docket.

Therefore, U.S. EPA proposes to conditionally approve this portion of the regulation if during the comment period the DNR commits to a schedule for submission of a definition of "charging port lids" applying only to lids on operating ovens at each battery, and an approvable, enforceable inspection technique.

5. *Coke Oven Offtake Piping Emissions.* NR 154.11(2)(b) (4.c. 3) requires that there shall be no visible emissions from 90% of all offtake piping except those open for charging, pushing, cleaning, and maintenance as determined by a one pass observation. Although this portion of the regulation represents RACT, it does not contain a definition of "offtake piping" (offtakes). The construction of offtakes is such that several pieces of equipment are fitted together, e.g., standpipes, goosenecks, gooseneck lids, and necessary connections. At each connection there is the possibility of leaks and consequently visible emissions. Unless the sources ought to be controlled is sufficiently described, the potential for inconsistent enforcement of the standard is created. In addition, the proposed regulation is not clear in that the standard could apply to all coke oven offtakes at a specific plant or to the offtakes at a specific battery at such plant. This ambiguity creates the potential for inconsistent enforcement of the standard and an unjustifiable increase in emissions from these sources.

In addition, no inspection technique is specified. Effective enforcement of an emission standard or limitation requires a precise inspection technique. Such a technique should include a description of the emissions to be observed, a description of the appropriate place of observation, the scope of the observation, e.g., whether an observer should travel to the source of emissions or remain perpendicular to the source at the centerline of the battery, and whether an inspection traverse should be made for each collector main. the methodology should also require battery identification, the number of operating ovens, the points of offtake piping emission from any oven and its oven number, and all offtake lids open to the atmosphere during the traverses. As in the case of coke oven lids, the operational status of the ovens should be stated in the regulation itself. Although compliance by offtake piping can be assessed by a one pass observation, observation of doors, lids, and offtake pipes is impossible during one pass. U.S. EPA has provided an example of an acceptable definition of "off take piping" and an approvable, enforceable method for determining visible emissions from offtakes to the DNR. A copy of this document appears in the U.S. EPA docket.

Therefore, U.S. EPA proposes to conditionally approve this portion of the regulation if during the comment the DNR commits to a schedule for submission of a definition of "offtake piping" applying only to off take piping on operating ovens at each battery, and an approvable, enforceable inspection technique.

6. *Coke Oven Quenching Emissions.* (NR 154.11(2)(b) 4.c. 4) requires that quench towers for the application of water on hot cake shall be equipped with grit arrestors or equivalent equipment approved by the DNR. The regulation also requires that water used in quenching shall not include coke by-product plant effluent.

U.S. EPA has determined that there is a relationship between the quality of water used to quench incandescent coke and the quantity of emissions generated by the quenching process. Empirical data available to U.S. EPA indicates that the quantity of total dissolved solids in quench water is approximately two times the concentration of total dissolved solids in the make-up water. U.S. EPA's technical information also indicates that quench water with 1000–1325 milligrams per liter total dissolved solids represents a standard achievable with reasonably available control technology.

Therefore, U.S. EPA proposes to approve the grit arrestors requirements. However, because water sources other than by-product plant effluent may contai high total dissolved solid levels, EPA proposes to conditionally approve the remainder of the rule if the DNR commits during the comment period to a schedule for submission of a total dissolved solids limit of less than 1325 milligrams per liter.

7. *Coke Oven Combustion Stack Emissions.* On its face, NR 154.11(2)(b) 4.c. is not approvable for coking operations because it lacks any emission limitations for coke oven combustion stacks.

However, the DNR has advised U.S. EPA that because aggregate particulate matter emissions from coke oven combustion stacks cause an impact on ambient air quality in nonattainment areas in excess of those concentrations specified at NR 154.11(3)(c) 2, the applicable mass emission limitation at combustion stacks would be 0.10 pounds of particulate matter per 1000 pounds of exhaust gas. See NR 154.11(3)(c) 2. Accompanied by an appropriate opacity standard, that limitation represents the degree of control achievable through the application of reasonably available control technology.

Under the 1972 Wisconsin SIP, visible emissions at coke oven combustion stacks are regulated by NR 154.11(6)(a) 1. This regulation requires these sources to meet emissions of shade or density greater than number 1 of the Ringlemann chart or 20 percent opacity with certain

exceptions. U.S. EPA's technical information indicates that this is an appropriate standard if a reading methodology is also specified.

Notwithstanding the absence of a specific rule for combustion stacks U.S. EPA proposes to approve NR 154.11(2)(b) 4.c., entitled "coking operations," if during the comment period the DNR certifies that NR 154.11(3) (c) 2. and NR 154.11(6)(a) 1. contain the appropriate limitations for coke oven combustion stacks and submits an enforceable, approvable visible emissions reading methodology for these sources.

8. *Compliance Schedule.* NR 154.11(2)(c) sets forth the compliance schedule for fugitive dust emission sources in coking operations. The schedule calls for ultimate compliance by December 31, 1982, and contains six interim increments of progress, whose dates are triggered by the effective date of a nonattainment determination under NR 154.03(1).

This compliance schedule is inappropriate for the one coking operation that is located in Wisconsin. The coking operation that the schedule applies to is presently operating under a court agreement to control its two coke batteries. Since sufficient pushing controls have already been installed at this facility and charging controls will be installed by October 1, 1980, the additional time until December 31, 1982 is unwarranted. Therefore, U.S. EPA proposes to disapprove NR 154.11(2)(c) as it applies to coke oven batteries unless DNR submits a compliance schedule for the one coking operation in Wisconsin, which contain increments of progress with dates certain and a final compliance date shortly after October 1, 1980.

Interested persons are invited to comment on the proposed Wisconsin regulation and on U.S. EPA's proposed action. Comments should be submitted to the address listed at the beginning of this Notice. Public comments received on or before August 4, 1980, will be considered in U.S. EPA's final rulemaking on NR 154.11(2)(b) 4.c.

All comments received will be available for inspection at Region V's Enforcement Division offices, 230 South Dearborn Street, Chicago, Illinois 60604.

Under Executive Order 12044 (43 FR 12661), U.S. EPA is required to judge whether a regulation is "significant," and, therefore, subject to certain procedural requirements of the Order, or whether it may follow other specialized development procedures. U.S. EPA labels these other regulations "specialized." I have reviewed this proposed regulation pursuant to the guidance in U.S. EPA's response to Executive Order 12044, "Improving Environmental Regulations," signed March 29, 1979, by the Administrator and I have determined that it is a specialized regulation not subject to the procedural requirements of Executive Order 12044.

This Notice of Proposed Rulemaking is issued under the authority of Section 110 of the Clean Air Act, as amended.

Dated: May 9, 1980.

John McGuire,

Regional Administrator.

[FR Doc. 80-20081 Filed 7-2-80; 8:45 am]

BILLING CODE 6560-01-M

---

40 CFR Part 413

[FRL 1530-2]

Electroplating Point Source Category Effluent Guidelines and Standards Pretreatment Standards for Existing Sources

AGENCY: Environmental Protection Agency.

ACTION: Proposed amendments to final rules.

SUMMARY: On September 7, 1979, the Environmental Protection Agency published a rule (44 FR 52590 *et seq.*) which limited the concentrations or mass of certain pollutants which may be introduced into publicly owned treatment works by operations in the Electroplating Point Source Category. Subsequently, these regulations were corrected by notices in the Federal Register dated October 1, 1979, and March 25, 1980. Following the promulgation of the Electroplating regulations several actions were brought in the United States Court of Appeals for the Third Circuit challenging various aspects of these regulations. Among these are *National Association of Metal Finishers* v. *EPA*, No. 75-2256 and *The Institute for Interconnecting and Packaging Electronic Circuits* v. *EPA*, No. 79-2443.

On March 7, 1980, EPA entered into an agreement with the above petitioners which seeks to settle the issues raised in the litigation. The Settlement Agreement states, among other things, that if the final regulations do not differ significantly from these proposed regulations, the petitioners will dismiss their petitions for review.

DATES: Comments are due on or before September 2, 1980.

ADDRESSES. Comments should be addressed to: Mr. Dwight Hlustick, Effluent Guidelines Division, (WH-552), Environmental Protection Agency, 401 M Street, SW., Washington, D.C. 20460. The supporting information and all comments on this proposal will be available for inspection and copying at the EPA Public Information Reference Unit, Room 2922 (EPA Library). The EPA information regulation (40 CFR Part 2) provides that a reasonable fee may be charged for copying.

FOR FURTHER INFORMATION CONTACT: Mr. Dwight Hlustick at the above address or telephone, (202) 426-2582.

SUPPLEMENTARY INFORMATION: On September 7, 1979, EPA published a rule which establishes "categorical" pretreatment standards covering all firms performing operations in the Electroplating Point Source Category that introduce effluent into publicly owned treatment works. These operations include electroplating, anodizing, conversion coating, electroless plating, chemical etching and milling, and the manufacturing of printed circuit boards. The plants covered by these regulations are found throughout the United States but are concentrated in heavily industrialized areas.

These standards contain specific numerical limitations based on an evaluation of available technologies in a particular industrial subcategory. The specific numerical limitations are arrived at separately for each subcategory, and are imposed on pollutants which may interfere with, pass through, or otherwise be incompatible with a publicly owned treatment works (POTW). For plants with a daily flow of 38,000 liters (10,000 gallons) per day or more, the promulgated standards specifically limit indirect discharges of cyanide and the following metals: lead, cadmium, copper, nickel, chromium, zinc, and silver. Additionally, these regulations limit total metal discharge which is defined as the sum of the individual concentrations of copper, nickel, chromium and zinc. For plants with a daily process wastewater flow of less than 38,000 liters (10,000 gallons), these standards limit only lead, cadmium, and cyanide in order to limit the closure rate in the industry.

After suits were filed by the National Association of Metal Finishers and the Institute for Interconnecting and Packaging Electronic Circuits, EPA met with these petitioners to determine whether the issues could be narrowed or resolved without litigation. The following proposed changes to the

regulation reflect the provisions of the Settlement Agreement entered into with these petitioners. Petitioners have stipulated that if the final regulations do not differ significantly from the proposed regulations, the petitioners will dismiss their challenge to the electroplating pretreatment regulation.

A. Proposed Modifications Arising Out of the Settlement Agreement

1. *Total cyanide limitations.* EPA proposes to revise the applicable daily maximum limitation for total cyanide (CN,T) from .8 to 1.9 mg/1 in subparts A, B, D, E, F, G, and H. This change is meant to allow for the special problems of cyanide removal for those who use significant quantities of both cyanide and steel in their plating operations. In such cases iron often enters the plating solution in dragout from the rinse following pickling and prior to plating. Steps can be taken to reduce iron contaminates in the plating solutions through better control of dragout from pre-plating rinsing and use of nonferrous tanks and anode baskets. However, in many cases the formation of iron complexes in the plating solution cannot be altogether eliminated. In these cases the iron and cyanide combine to form a stable iron complex which is not destroyed, as is free cyanide, by alkaline chlorination treatment. Thus, there is a fundamental difference between platers treating free cyanide and iron cyanide complexes.

EPA took this problem into account in its regulation by including those who use significant quantities of steel and cyanide in the data used to establish the daily maximum limitation for cyanide. However, the Agency now believes that unless the total cyanide number is raised many platers who utilize significant amounts of cyanide and steel will not be able to achieve the standards through the use of best practicable technology. (The Agency also considered establishing a separate subcategory for these platers but decide that approach was impractical; the amounts of steel and cyanide used often fluctuate and there is no objectively quantifiable point at which complex cyanides become a special problem).

To establish a more appropriate daily maximum limit for cyanide, the Agency reviewed its data base to locate representative plants which use significant quantities of both iron and cyanide. The median of the total cyanide effluent for these plants was .38 mg per liter, with a daily maximum variability factor of 5.0. This results in a maximum daily limitation of 1.9 mg per liter. The equivalent daily maximums expressed as mass based limits (mg/op-m^2) are as follows: for subparts A, B, D, E, F, and G, 74 mg/op-m^2; for subpart H, 169 mg/op-m^2.

2. *Daily average values and compliance monitoring.* EPA proposes to establish 4-day limitations applicable to average concentration and mass-based daily values in lieu of the 30-day limitations now contained in the regulation. Thirty day limitations are now deemed unnecessary for enforcement purposes.

EPA also proposes to revoke the electroplating compliance monitoring requirements contained in § 413.03 of the regulations. New monitoring requirements will be promulgated as an addition to EPA's General Pretreatment Regulations, 40 CFR Part 403, which will be applicable to all regulated industries. This section is published pursuant to the settlement agreement discussed above. EPA particularly encourages comment on the policy proposed below.

3. *Relationship Between These Proposed Standards and Best Available Technology Pretreatment Standards.*

This regulation proposes categorical pretreatment standards satisfying the requirement in the NRDC consent decree that standards analogous to best practical control technology be developed for existing sources in the electroplating point source category.

The Agency is in the process of developing pretreatment standards analogous to best available technology for electroplating. These standards may be promulgated in 1981. Due to the short time period between promulgation of "BPT" and "BAT" standards, the Agency feels that it is appropriate to set forth with some degree of specificity the future course which it will follow in considering BAT analog pretreatment standards for electroplating.

First of all, any further BAT analog standards will be based on treatment technology compatible with the model technology upon which these standards were based. These new regulations will not render obsolete the technology designed to meet the BPT analog regulations.

In developing BAT analog standards for the industry, EPA will take into account the cumulative impact of these "BPT" regulations in determining what is "economically achievable."

Furthermore, EPA is sensitive to the fact that the job shop metal finishing segment is vulnerable to adverse economic impacts as a result of pretreatment regulations. In the preamble to the September 7, 1979, standards, EPA estimated that 587 metal finishing job shops, employing 9,653 workers, may close as a result of these regulations. As to this segment of the metal finishing industry that is economically vulnerable, EPA does not believe that more stringent regulations are now economically achievable. Therefore, EPA does not plan to develop more stringent new pretreatment standards for the job shop metal finishing segment in the next several years. Nor does EPA plan to develop in the next several years more stringent standards for the independent printed circuit board segment, where significant economic vulnerability also exists.

B. Executive Order 12044

Under Executive Order 12044 EPA is required to judge whether a regulation is "significant" and therefore subject to the procedural requirements of the Order or whether it may follow other specialized development procedures. EPA labels these regulations "specialized." I have reviewed this regulation and determine that it is a specialized regulation not subject to the procedural requirements of Executive Order 12044.

Dated: June 26, 1980.

Douglas M. Costle,

Administrator.

(Secs. 301, 304(g), 307(b), (d), 308, 501(a), Clean Water Act, as amended (33 U.S.C. 1311, 1314(g), 1317(b) and (d), 1318, 1341(a)))

Proposed Amendment to Part 413—Electroplating Point Source Category

§ 413.03 [Reserved]

1. EPA proposed to revoke § 413.03.

2. EPA proposed to amend § 413.14 as follows:

§ 413.14 Pretreatment standards for existing sources.

Except as provided in 40 CFR 403.7 and 403.13, any existing source subject to this subpart which introduces pollutants into a publicly owned treatment works must comply with 40 CFR Part 403 and achieve the following pretreatment standards for existing sources (PSES) after October 12, 1982:

(a) No user introducing wastewater pollutants into a publicly owned treatment works under the provisions of this subpart shall augment the use of process wastewater or otherwise dilute the wastewater as a partial or total substitute for adequate treatment to achieve compliance with this standard.

(b) For a source discharging less than 38,000 liters (10,000 gal) per calendar day of electroplating process wastewater the following limitations shall apply:

Subpart A—Common metals facilities discharging less than 38,000 liters per day PSES limitations (mg/l)

Pollutant or pollutant property	Maximum for any 1 day	Average of daily values for 4 consecutive monitoring days shall not exceed
CN,A	5.0	2.7
Pb	0.6	0.4
Cd	1.2	0.7

(c) For plants discharging 38,000/l (10,000 gal) or more per calendar day of electroplating process wastewater the following limitations shall apply:

Subpart A—Common metals facilities discharging 38,000 liters or more per day PSES limitations (mg/l)

Pollutant or pollutant property	Maximum for any 1 day	Average of daily values for 4 consecutive monitoring days shall not exceed
CN,T	1.9	1.0
CU	4.5	2.7
Ni	4.1	2.6
Cr	7.0	4.0
Zn	4.2	2.6
Pb	0.6	0.4
Cd	1.2	0.7
Total metals	10.5	6.8

(d) Alternatively, the following mass-based standards are equivalent to and may be applied in place of those limitations specified under paragraph(c) of this section upon prior agreement between a source subject to these standards and the publicly owned treatment works receiving such regulated wastes:

Subpart A—Common metals facilities discharging 38,000 liters or more per day PSES limitations (mg/sq m-operation)

Pollutant or pollutant property	Maximum for any 1 day	Average of daily values for 4 consecutive monitoring days shall not exceed
CN,T	74	39
CU	176	105
Ni	160	100
Cr	273	156
Zn	164	102
Pb	23	16
Cd	47	29
Total metals	410	267

(e) For wastewater sources regulated under paragraph(c) of this section, the following optional control program may be elected by the source introducing treated process wastewater into a publicly owned treatment works with the concurrence of the control authority. These optional pollutant parameters are not eligible for allowance for removal achieved by the publicly owned treatment works under 40 CFR 403.7. In the absence of strong chelating agents, after reduction of hexavalent chromium wastes, and after neutralization using calcium oxide (or hydroxide) the following limitations shall apply:

Subpart A—Common metals facilities discharging 38,000 liters or more per day PSES limitations (mg/l)

Pollutant or pollutant property	Maximum for any 1 day	Average of daily values for 4 consecutive monitoring days shall not exceed
CN,T	1.9	1.0
Pb	0.6	0.4
Cd	1.2	0.7
TSS	20.0	13.4
pH	Within the range 7.5 to 10.0	

3. EPA proposes to amend § 413.24 as follows:

§ 413.24 Pretreatment standards for existing sources.

Except as provided in 40 CFR 403.7 and 403.13, any existing source subject to this subpart which introduces pollutants into a publicly owned treatment works must comply with 40 CFR Part 403 and achieve the following pretreatment standards for existing sources (PSES) after October 12, 1982:

(a) No user introducing wastewater pollutants into a publicly owned treatment works under the provisions of this subpart shall augment the use of process wastewater or otherwise dilute the wastewater as a partial or total substitute for adequate treatment to achieve compliance with this standard.

(b) For a source discharging less than 38,000 liters (10,000 gal) per calendar day of electroplating process wastewater the following limitations shall apply:

Subpart B—Precious metals facilities discharging less than 38,000 liters per day PSES limitations (mg/1)

Pollutant or pollutant property	Maximum for any 1 day	Average of daily values for 4 consecutive monitoring days shall not exceed
CN, A	5.0	2.7
Pb	0.6	0.4
Cd	1.2	0.7

(c) For plants discharging 38,000/1 (10,000 gal) or more per calendar day of electroplating process wastewater the following limitations shall apply:

Subpart B—Precious metals facilities discharging 38,000 liters or more per day PSES limitations (mg/1)

Pollutant or pollutant property	Maximum for any 1 day	Average of daily values for 4 consecutive monitoring days shall not exceed
Ag	1.2	0.7
CN,T	1.9	1.0
Cu	4.5	2.7
Ni	4.1	2.6
Cr	7.0	4.0
Zn	4.2	2.6
Pb	0.6	0.4
Cd	1.2	0.7
Total metals	10.5	6.8

(d) Alternatively, the following mass-based standards are equivalent to and may apply in place of those limitations specified under paragraph(c) of this section upon prior agreement between a source subject to these standards and the publicly owned treatment works receiving such regulated wastes:

Subpart B—Precious metals facilities discharging 38,000 liters or more per day PSES limitations (mg/sq m-operation)

Pollutant or pollutant property	Maximum for any 1 day	Average of daily values for 4 consecutive Monitoring days shall not exceed
Ag	47	29
CN,T	74	39
Cu	176	105
Ni	160	100
Cr	273	156
Zn	164	102
Pb	23	16
Cd	47	29
Total metals	410	267

(e) For wastewater sources regulated under paragraph(c) of this section, the following optional control program may be elected by the source introducing treated process wastewater into a publicly owned treatment works with the concurrence of the control authority. These optional pollutant parameters are not eligible for allowance for removal achieved by the publicly owned treatment works under 40 CFR 403.7. In the absence of strong chelating agents, after reduction of hexavalent chromium wastes, and after neutralization using calcium oxide (or hydroxide) the following limitations shall apply:

Subpart B—Precious metals facilities discharging 38,000 liters or more per day PSES limitations (mg/1)

Pollutant or pollutant property	Maximum for any 1 day	Average of daily values for 4 consecutive Monitoring days shall not exceed
CN,T	1.9	1.0
Pb	0.6	0.4
Cd	1.2	0.7
TSS	20.0	13.4
pH	Within the range 7.5 to 10.0	

4. EPA proposes to amend § 413.44 as follows:

§ 413.44 Pretreatment standards for existing sources.

Except as provided in 40 CFR 403.7 and 403.13, any existing source subject to this subpart which introduces pollutants into a publicly owned treatment works must comply with 40 CFR Part 403 and achieve the following pretreatment standards for existing sources (PSES) after October 12, 1982:

(a) No user introducing wastewater pollutants into a publicly owned treatment works under the provisions of this subpart shall augment the use of process wastewater or otherwise dilute the wastewater as a partial or total substitute for adequate treatment to achieve compliance with this standard.

(b) For a source discharging less than 38,000 liters (10,000 gal) per calendar day of electroplating process wastewater the following limitations shall apply:

Subpart D—Anodizing facilities discharging less than 38,000 liters per day PSES limitations (mg/l)

Pollutant or pollutant property	Maximum for any 1 day	Average of daily values for 4 consecutive monitoring days shall not exceed
CN,A	5.0	2.7
Pb	0.6	0.4
Cd	1.2	0.7

(c) For plants discharging 38,000/1 (10,000 gal) or more per calendar day of electroplating process wastewater the following limitations shall apply:

Subpart D—Anodizing facilities discharging 38,000 liters or more per day PSES limitations (mg/l)

Pollutant or pollutant property	Maximum for any 1 day	Average of daily values for 4 consecutive monitoring days shall not exceed
CN,T	1.9	1.0
Cu	4.5	2.7
Ni	4.1	2.6
Cr	7.0	4.0
Zn	4.2	2.6
Pb	0.6	0.4
Cd	1.2	0.7
Total metals	10.5	6.8

(d) Alternatively, the following mass-based standards are equivalent to and may apply in place of those limitations specified under paragraph (c) of this section upon prior agreement between a source subject to these standards and the publicly owned treatment works receiving such regulated wastes:

Subpart D—Anodizing facilities discharging 38,000 liters or more per day PSES limitations (mg/sq m-operation)

Pollutant or pollutant property	Maximum for any 1 day	Average of daily values for 4 consecutive monitoring days shall not exceed
CN,T	74	39
Cu	176	105
Ni	160	100
Cr	273	156
Zn	164	102
Pb	23	16
Cd	47	29
Total metals	410	257

(e) For wastewater sources regulated under paragraph (c) of this section, the following optional control program may be elected by the source introducing treated process wastewater into a publicly owned treatment works with the concurrence of the control authority. These optional pollutant parameters are not eligible for allowance for removal achieved by the publicly owned treatment works under 40 CFR 403.7. In the absence of strong chelating agents, after reduction of hexavalent chromium wastes, and after neutralization using calcium oxide (or hydroxide) the following limitations shall apply:

Subpart D—Anodizing facilities discharging 38,000 liters or more per day PSES limitations (mg/l)

Pollutant or pollutant property	Maximum for any 1 day	Average of daily values for 4 consecutive monitoring days shall not exceed
CN,T	1.9	1.0
Pb	0.6	0.4
Cd	1.2	0.7
TSS	20.0	13.4
pH	Within the range 7.5 to 10.0	

5. EPA proposes to amend § 413.54 as follows:

§ 413.54 Pretreatment standards for existing sources.

Except as provided in 40 CFR 403.7 and 403.13, any existing source subject to this subpart which introduces pollutants into a publicly owned treatment works must comply with 40 CFR Part 403 and achieve the following pretreatment standards for existing sources (PSES) after October 12, 1982:

(a) No user introducing wastewater pollutants into a public owned treatment works under the provisions of this subpart shall augment the use of process wastewater or otherwise dilute the wastewater as a partial or total substitute for adequate treatment to achieve compliance with this standard.

(b) For a source discharging less than 38,000 liters (10,000 gal) per calendar day of electroplating process wastewater the following limitations shall apply:

Subpart E—Coatings facilities discharging less than 38,000 liters per day PSES limitations (mg/l)

Pollutant or pollutant property	Maximum for any 1 day	Average of daily values for 4 consecutive monitoring days shall not exceed
CN,A	5.0	2.7
Pb	0.6	0.4
Cd	1.2	0.7

(c) For plants discharging 38,000 liters (10,000 gal) or more per calendar day of electroplating process wastewater the following limitations shall apply:

Subpart E—Coatings facilities discharging 38,000 liters or more per day PSES limitations (mg/l)

Pollutant or pollutant property	Maximum for any 1 day	Average of daily values for 4 consecutive monitoring days shall not exceed
CN,T	1.9	1.0
Cu	4.5	2.7
Ni	4.1	2.6
Cr	7.0	4.0
Zn	4.2	2.6
Pb	0.6	0.4
Cd	1.2	0.7
Total metals	10.5	6.8

(d) Alternatively, the following mass-based standards are equivalent to and may apply in place of those limitations specified under paragraph (c) of this section upon prior agreement between a source subject to these standards and the publicly owned treatment works receiving such regulated wastes:

Subpart E—Coatings facilities discharging 38,000 liters or more per day PSES limitations (mg/sq m-operation)

Pollutant or pollutant property	Maximum for any 1 day	Average of daily values for 4 consecutive monitoring days shall not exceed
CN,T	74	39
Cu	176	105
Ni	160	100
Cr	273	156
Zn	164	102
Pb	23	16
Cd	47	29
Total metals	410	257

(e) For wastewater resources regulated under paragraph (c) of this section, the following optional control program may be elected by the source introducing treated process wastewater into a publicly owned treatment works with the concurrence of the control authority. These optional pollutant parameters are not eligible for allowance for removal achieved by the publicly owned treatment works under 40 CFR 403.7. In the absence of strong chelating agents, after reduction of hexavalent chromium wastes, and after neutralization using calcium oxide (or

hydroxide) the following limitations shall apply:

Subpart E—Coatings facilities discharging 38,000 liters or more per day PSES limitations (mg/l)

Pollutant or pollutant property	Maximum for any 1 day	Average of daily values for 4 consecutive monitoring days shall not exceed
CN,T	1.9	1.0
Pb	0.6	0.4
Cd	1.2	0.7
TSS	20.0	13.4
pH	Within the range 7.5 to 10.0	

6. EPA proposes to amend § 413.64 as follows:

§ 413.64 Pretreatment standards for existing sources.

Except as provided in 40 CFR 403.7 and 403.13, and existing source subject to this subpart which introduces pollutants into a publicly owned treatment works must comply with 40 CFR Part 403 and achieve the following pretreatment standards for existing sources (PSES) after October 12, 1982:

(a) No User introducing wastewater pollutants into a publicly owned treatment works under the provisions of this subpart shall augment the use of process wastewater or otherwise dilute the wastewater as a partial or total substitute for adequate treatment to achieve compliance with this standard.

(b) For a source discharging less than 38,000 liters (10,000 gal) per calendar day of electroplating process wastewater the following limitations shall apply:

Subpart F—Chemical etching and milling facilities discharging less than 38,000 liters per day PSES limitations (mg/l)

Pollutant or pollutant property	Maximum for any 1 day	Average of daily values for 4 Consecutive monitoring days shall not exceed
CN, A	5.0	2.7
Pb	0.6	0.4
Cd	1.2	0.7

(c) For plants discharging 38,000 l (10,000 gal) or more per calendar day of electroplating process wastewater the following limitations shall apply:

Subpart F—Chemical etching and milling facilities discharging 38,000 liters or more per day PSES limitations (mg/l)

Pollutant or pollutant property	Maximum for any 1 day	Average of daily values for 4 Consecutive monitoring days shall not exceed
CN, T	1.9	1.0
Cu	4.5	2.7
Ni	4.1	2.6
Cr	7.0	4.0
Zn	4.2	2.6
Pb	0.6	0.4
Cd	1.2	0.7
Total metals	10.5	6.8

(d) Alternatively, the following mass-based standards are equivalent to and may apply in place of those limitations specified under paragraph (c) of this section upon prior agreement between a source subject to these standards and the publicly owned treatment works receiving such regulated wastes:

Subpart F—Chemical etching and milling facilities discharging 38,000 liters or more per day PSES limitations (mg/sq m-operation)

Pollutant or pollutant property	Maximum for any 1 day	Average of daily values for 4 Consecutive monitoring days shall not exceed
CN, T	74	39
Cu	176	105
Ni	160	100
Cr	273	156
Zn	164	102
Pb	23	16
Cd	47	29
Total metals	410	267

(c) For wastewater sources regulated under paragraph (c) of this section, the following optional control program may be elected by the source introducing treated process wastewater into a publicly owned treatment works with the concurrence of the control jauthority. These optional pollutant parameters are not eligible for allowance for removal achieved by the publicly owned treatment works under 40 CFR 403.7. In the absence of strong chelating agents, after reduction of hexavalent chromium wastes, and after neutralization using calcium oxide (or hydroxide) the following limitations shall apply:

Subpart F—Chemical etching and milling facilities discharging 38,000 liters or more per day PSES limitations (mg/l)

Pollutant or pollutant property	Maximum for any 1 day	Average of daily values for 4 Consecutive monitoring days shall not exceed
CN, T	1.9	1.0
Pb	0.6	0.4
Cd	1.2	0.7
TSS	20.0	13.4
Ph	Within the range 7.5 to 10.0	

7. EPA proposes to amend § 413.74 as follows:

§ 413.74 Pretreatment standards for existing sources.

Except as provided in 40 CFR 403.7 and 403.13, any existing source subject to this subpart which introduces pollutants into a publicly owned treatment works must comply with 40 CFR Part 403 and achieve the following pretreatment standards for existing sources (PSES) after October 12, 1982:

(a) No user introducing wastewater pollutants into a publicly owned treatment works under the provisions of this subpart shall augment the use of process wastewater or otherwise dilute the wastewater as a partial or total substitute for adequate treatment to achieve compliance with this standard.

(b) For a soruce discharging less than 38,000 liters (10,000 gal) per calendar day of electroplating process wastewater the following limitations shall apply:

Subpart G—Electroless plating facilities discharging less than 38,000 liters per day PSES limitations (mg/1)

Pollutant or pollutant property	Maximum for any 1 day	Average of daily values for 4 consecutive monitoring days shall not exceed
CN,A	5.0	2.7
Pb	0.6	0.4
Cd	1.2	0.7

(c) For plants discharging 38,000 1 (10,00 gal) or more per calendar day of electroplating process wastewater the following limitations shall apply:

Subpart G—Electroless plating facilities discharging 38,000 liters or more per day PSES limitations (mg/1)

Pollutant or pollutant property	Maximum for any 1 day	Average of daily values for 4 consecutive monitoring days shall not exceed
CN,T	1.9	1.0
Cu	4.5	2.7
Ni	4.1	2.6
Cr	7.0	4.0
Zn	4.2	2.6
Pb	0.6	0.4
Cd	1.2	0.7
Total metals	10.5	6.8

(d) Alternatively, the following mass-based standards are equivalent to and may apply in place of those limitations specified under paragraph (c) of this section upon prior agreement between a soruce subject to these standards and the publicly owned treatment works receiving such regulated wastes:

Subpart G—Electroless plating facilities discharging 38,000 liters or more per day PSES limitations (mg/sq m-operation)

Pollutant or pollutant property	Maximum for any 1 day	Average of daily values for 4 consecutive monitoring days shall not exceed
CN,T	74	39
Cu	176	105
Ni	160	100
Cr	273	156
Zn	164	102

Subpart G—Electroless plating facilities discharging 38,000 liters or more per day PSES limitations (mg/sq m-operation)

Pollutant or pollutant property	Maximum for any 1 day	Average of daily values for 4 consecutive monitoring days shall not exceed
Pb	23	16
Cd	47	29
Total metals	410	267

(e) For wastewater sources regulated under paragraph (c) of this section, the following optional control program may be elected by the source introducing treated process wastewater into a publicly owned treatment works with the coucurrence of the control authority. These optional pollutant parameters are not eligible for allowance for removal achieved by the publicly owned treatment works under 40 CFR 403.7. In the absence of strong chelating agents, after reduction of hexavalent chromium wastes, and after neutralization using a calcium oxide (or hydroxide) the following limitations shall apply:

Subpart G—Electroless plating facilities discharging 38,000 liters or more per day PSES limitations (mg/l)

Pollutant or pollutant property	Maximum for any 1 day	Average of daily values for 4 consecutive monitoring days shall not exceed
CN,T	1.9	1.0
Pb	0.6	0.4
Cd	1.2	0.7
TSS	20.0	13.4
ph	Within the range 7.5 to 10.0	

8. EPA proposes to amend § 413.84 as follows:

§ 413.84 Pretreatment standards for existing sources.

Except as provided in 40 CFR 403.7 and 403.13, any existing source subject to this subpart which introduces pollutants into a publicly owned treatment works must comply with 40 CFR Part 403 and achieve the following pretreatment standards for existing sources (PSES) after October 12, 1982:

(a) No User introducing wastewater pollutants into a publicly owned treatment works under the provisions of this subpart shall augment the use of process wastewater or otherwise dilute the wastewater as a partial or total substitute for adequate treatment to achieve compliance with this standard.

(b) For a source discharging less than 38,000 liters (10,000 gal) per calendar day of electroplating process wastewater the following limitations shall apply:

Subpart H—Printed circuit board facilities discharging less than 38,000 liters per day PSES limitations (mg/l)

Pollutant or pollutant property	Maximum for any 1 day	Average of daily values for 4 consecutive monitoring days shall not exceed
CN,A	5.0	2.7
Pb	0.6	0.4
Cd	1.2	0.7

(c) For plants discharging 38,000 l (10,000 gal) or more per calendar day of electroplating process wastewater the following limitations shall apply:

Subpart H—Printed circuit board facilities discharging 38,000 liters or more per day PSES limitations (mg/l)

Pollutant or pollutant property	Maximum for any 1 day	Average of daily values for 4 consecutive monitoring days shall not exceed
CN,T	1.9	1.0
Cu	4.5	2.7
Ni	4.1	2.5
Cr	7.0	4.0
Zn	4.2	2.6
Pb	0.6	0.4
Cd	1.2	0.7
Total metals	10.5	6.5

(d) Alternatively, the following mass-based standards are equivalent to and may apply in place of those limitations specified under paragraph (c) of this section upon prior agreement between a source subject to these standards and the publicly owned treatment works receiving such regulated wastes:

Subpart H—Printed circuit board facilities discharging 38,000 liters or more per day PSES limitations (mg/sq m-operation)

Pollutant or pollutant property	Maximum for any 1 day	Average of daily values for 4 consecutive monitoring days shall not exceed
CN,T	67	89
Cu	401	241
Ni	365	229
Cr	623	357
Zn	374	232
Pb	53	36
Cd	107	65
Total metals	936	609

(e) For wastewater sources regulated under paragraph (c) of this section, the following optional control program may be elected by the source introducing treated process wastewater into a publicly owned treatment works with the concurrence of the control authority. These optional pollutant parameters are not eligible for allowance for removal achieved by the publicly owned treatment works under 40 CFR 403.7. In the absence of strong chelating agents, after reduction of hexavalent chromium wastes, and after neutralization using calcium oxide (or hydroxide) the following limitations shall apply:

Subpart H—Printed circuit board facilities discharging 38,000 liters or more per day PSES limitations (mg/l)

Pollutant or pollutant property	Maximum for any 1 day	Average of daily values for 4 consecutive monitoring days shall not exceed
CN,T	1.9	1.0
Pb	0.6	0.4
Cd	1.2	0.7
TSS	20.0	13.4
pH	Within the range 7.5 to 10.0	

[FR Doc. 80-19823 Filed 7-2-80; 8:45 am]

BILLING CODE 6560-01-M

DEPARTMENT OF TRANSPORTATION

Coast Guard

46 CFR Part 151

[CGD 80-001]

Unmanned Barges Carrying Certain Bulk Dangerous Cargoes

AGENCY: Coast Guard, DOT.

ACTION: Proposed rule.

SUMMARY: In the interest of safety, the Coast Guard reviews all chemicals that are proposed for bulk shipment by water. All cargoes that are classified as dangerous are regulated. Since the regulations were written, many new cargoes have been accepted for bulk carriage under interim guidelines. The reason for this proposed rulemaking is to update the regulations to reflect these developments.

DATE: Comments must be received on or before August 18, 1980.

ADDRESSES: Comments should be submitted to the Commandant (G-CMC/24); (CGD 80-001), U.S. Coast Guard, Washington, D.C. 20593. Comments may be delivered to and will be available for inspection or copying from 7 a.m. to 5 p.m., Monday through Thursday, at the Marine Safety Council (G-CMC/24), Room 2418, U.S. Coast Guard Headquarters, 2100 Second Street, S.W., Washington, D.C.

FOR FURTHER INFORMATION CONTACT: Joseph J. Jakabcin, Office of Merchant Marine Safety (G-MHM-3/14), Room 1402, U.S. Coast Guard Headquarters, 2100 Second Street, S.W., Washington, D.C. 20593, (202-426-6262).

SUPPLEMENTARY INFORMATION: Interested persons are invited to participate in this rulemaking by submitting written data, views, or arguments. Written comments should include the docket number (CGD 80-001), the name and address of the

person submitting the comments, the specific section of the proposal to which the comment applies, and indicate the reasons for the comment. If an acknowledgement is desired, a stamped, addressed postcard should be enclosed.

The proposal may be changed in view of the comments received. All comments received before expiration of the comment period will be considered before final action is taken on this proposal. No public hearings are contemplated, but one or more may be held at a time and place set out in a later notice in the Federal Register, if requested by anyone desiring to comment orally at a public hearing and raising a genuine issue.

Drafting Information

The principal persons involved in drafting this proposal are Joseph J. Jakabcin, Project Manager, Office of Merchant Marine Safety, and Michael N. Mervin, Project Attorney, Office of Chief Counsel.

Discussion of the Proposed Regulations

Since the list of dangerous cargoes in Part 151 of Title 46, Code of Federal Regulations was last updated, the use of certain chemicals has increased to the point where the Coast Guard has received requests for permission to ship these cargoes in bulk in barges. These requests have been reviewed and, in many cases, minimum carriage requirements have been established and the requrested shipment has been permitted. In a few cases, experience has resulted in modifications to the requirements initially established. The regulations in this proposal update Part 151 to include all dangerous cargoes that the Coast Guard currently allows to be shipped in bulk and codifies the minimum carriage requirements that have been previously established for these cargoes. This will provide wider distribution of the minimum carriage requirements for these cargoes and thus facilitate their shipment.

The following subparts are involved in this update: Table 151.01–10(b)—Cargoes Regulated by Subchapter O, Table 151.05—Summary of Minimum Requirements, and Subpart 151.50—Special Requirements for Certain Cargoes.

The proposal has been evaluated in accordance with DOT "Regulatory Policies and Procedures," 44 FR 11033 (February 26, 1979). A copy of the draft evaluation may be obtained from the Commandant (G–CMC), Room 2418, U.S. Coast Guard Headquarters, 2100 Second Street, Washington, D.C. 20593 (202) 426–1477.

Accordingly, the Coast Guard proposes to amend Part 151 of Title 46 of the Code of Federal Regulations as follows:

1. By revising Table 151.01–10(b) to read as follows:

§ 151.01–10 Application of vessel inspection regulations.

* * * * *

Table 151.01–10(b)—Cargoes Regulated by Subchapter O

Acetaldehyde.
Acetic Acid.
Acetic anhydride.
Acetone cyanohydrin.
Acetonitrile.
Acrylonitrile. Adiponitrile.
Allyl alcohol.
Allyl chloride.
Aminoethylethanolamine.
Ammonia, anhydrous.
Ammonium hydroxide (NH_3, 28% or less).
Aniline.
Benzene.
Benzene-Hydrocarbon mixtures (containing acetylenes).
Butadiene (inhibited).
Butadiene, Butene mixtures (inhibited) (containing acetylenes).
Butyl acrylate (n-).
Butyl acrylate (iso-).
Butylamine.
Butylmethacrylate (inhibited).
Butyraldehyde (crude).
Butyraldehyde (n-).
Butyraldehyde (iso-).
Camphor oil.
Carbolic oil.
Carbon dioxide (liquid).
Carbon disulfide.
Carbon tetrachloride.
Caustic potash solution.
Caustic soda solution.
Chemical wastes (mixture of chlorinated hydrocarbons and caustic materials).
Chlorine.
Chlorobenzene.
Chloroform.
Chlorohydrins (crude).
Chlorosulfonic acid.
Creosote.
Cresols.
Cresylate spent caustic.
Crotonaldehyde.
Diisopropanolamine.
Decyl acrylate (iso-) (inhibited).
Dichlorodifluoromethane.
2,2'-Dichloroethyl ether.
Dichloromethane.
Dichloropropane.
Dichloropropene.
Diethanolamine.
Diethylamine.
Diethylenetriamine.
Diisobutylamine.
Diisopropanolamine.
Diisopropylamine.
Dimethylamine.
Dimethylformamide.
Di-n-propylamine.
1,4-Doxane.
Epichlorohydrin.
Ethylacrylate.
Ethylamine (72% or less).
Ethyl chloride.
Ethyl cyclohexylamine.
Ethylene cyanohydrin.
Ethylenediamine.
Ethylene dibromide.
Ethylene dichloride.
Ethylene oxide.
Ethyl ether.
2-Ethyl hexyl acrylate (inhibited).
Ethylidene norbornene (inhibited).
Ethyl n-butylamine.
2-Ethyl-3-propylacrolein.
Ferric chloride solutions.
Formaldehyde solution.
Formic acid.
Furfural.
Hexamethylenediamine.
Hydrochloric acid.
Hydrochloric acid, spent (10% or less).
Hydrogen chloride.
Hydrogen fluoride.
2-Hydroxyethyl acrylate (inhibited).
Industrial wastes (containing Dimethyldisulfide, Methyl mercaptan, and Methomyl).
Isopreme.
Methylacetylene-Propadiene mixture.
Methyacrylate.
Methylbromide.
Methylchloride.
2-Methyl-5-ethyl pyridine.
Methylmethacrylate.
2-Methyl pyridine.
alpha-Methyl styrene (inhibited).
Monochlorodifluoromethane.
Monoethanolamine.
Monoisopropanolamine.
Morpholine.
Motor fuel antiknock compounds (containing lead alkyls).
Nitric acid (70% or less).
Nitrobenzene.
1- or 2-Nitropropane.
Oleum.
1,3-Pentadiene (inhibited).
Perchloroethylene.
Phenol.
Phosphoric acid.
Phosphorus.
Phthalic anhydride.
Polyethyleneamine.
Polymethylene-polyphenyl-isocyanate.
Polyvinylbenzyltrimethyl ammonium chloride solution.
Propionic acid.
Propylamine-(iso-).
Propylene oxide.
Pyridine.
Sodium chlorate solution (45% or less).
Sodium sulfide, Hydrosulfide solutions (H_2S 15 ppm or less).
Sodium sulfide, Hydrosulfide solutions (H_2S greater than 15 ppm but less than 200 ppm).
Sodium Sulfide, Hydrosulfide solutions (H_2S greater than 200 ppm).
Styrene.
Sulfur (liquid).
Sulfur dioxide.
Sulfuric acid.
Sulfuric acid spent.
Tetraethylene pentamine.
Toluene diisocyanate.
Trichloroethylene.
1,2,3-Trichloropropane.
Triethanolamine.
Triethylenetetramine.

Triisopropanolamine.
Triethylamine.
Vinyl acetate.
Vinyl chloride.
Vinylidene chloride (inhibited).

§§ 151.05-1 [Amended]

2. By adding the following items in alphabetical order to table 151.05-1:

BILLING CODE 4910-14-M

TABLE 151.05-SUMMARY OF MINIMUM REQUIREMENTS

CARGO IDENTIFICATION				CARGO SEGRE-GATION	TANKS			CARGO TRANSFER		ENVIRONMENTAL CONTROL		FIRE PROTECTION REQUIRED	SPECIAL REQ. SECTION	ELECT HAZARD CLASS GROUP	TEMP. CONTROL INSTALL	TANK INTER-NAL INSPEC
NAME	PRESSURE	TEMP	HULL TYPE	TANK	TYPE	VENT	GAGING	PIPING CLASS	CONTROL	CARGO TANKS	CARGO HANDLING SPACE					
Benzene-Hydrocarbon Mixtures (containing acetylenes)	Atmos	Amb	III	11 211	Integ Grav	PV	Open	II	G-1	NR	Vent F	Yes	151.50-71	I-D	N/A	G
Butadiene, Butene Mixtures (inhibited) (containing acetylenes)	Press	Amb	II	1 N/A 211	Indep Press	SR	Restr	II	P-1	NR	Vent F	Yes	151.50-30 & 70	I-B	N/A	8 yr
Butylamine	Atmos	Amb	II	111 211	Indep Grav	PV	Closed	II	G-1	NR	Vent F	Yes	151.55 1 (c)	I-D	N/A	G
Butylmethacrylate (inhibited)	Atmos	Amb	III	11 211	Integ Grav	PV	Restr	II	G-1	NR	Vent F	Yes	No	I-D	N/A	G
Butyraldehydes (crude)	Atmos	Amb	III	11 211	Integ Grav	PV	Open	II	G-1	NR	Vent F	Yes	No	I-C	N/A	G
Carbon Dioxide, liquid	Press	Low	III	1 NA 21	Indep Press	SR	Restr	I-L	P-1	NR	Vent-F	No	151.50-30	NA	151.40 -1(b)(1)	G
Chemical Wastes (Mixture of chlorinated hydrocarbons and caustic materials)	Atmos	Amb	III	11 21	Integ Grav	PV	Restr	II	G-1	NR	Vent F	No	No	N/A	N/A	G
Creosote	Atmos	Amb	III	11 21	Integ Grav	Open	Open	II	G-1	NR	Vent N	Yes	No	N/A	N/A	G
Cresylate Spent Caustic	Atmos	Amb	III	111 21	Integ Grav	Open	Open	II	G-1	NR	Vent N	No	151.50-73 151.55-1(b)	N/A	N/A	G
iso-Decyl Acrylate (inhibited)	Atmos	Amb	III	11 21	Integ Grav	Open	Open	II	G-1	NR	Vent N	Yes	151.55 1 (c)	N/A	N/A	G
2,2'-Dichloroethyl Ether	Atmos	Amb	II	111 211	Integ Grav	PV	Restr	II	G-1	NR	Vent F	Yes	151.55 1 (f)	I-D	N/A	G
Dichloromethane	Atmos	Amb	III	11 21	Integ Grav	PV	Restr	II	G-1	NR	Vent F	No	No	N/A	N/A	G
Diethylamine	Atmos	Amb	III	111 211	Integ Grav	PV	Restr	II	G-1	NR	Vent F	Yes	151.55 1 (c)	I-C	N/A	G
Diisobutylamine	Atmos	Amb	III	111 211	Integ Grav	PV	Restr	II	G-1	NR	Vent F	Yes	151.55 1 (c)	I-C	N/A	G
Diisopropylamine	Atmos	Amb	II	111 211	Integ Grav	PV	Closed	II	G-1	NR	Vent F	Yes	151.55 1 (c)	I-C	N/A	G
Dimethyl Formamide	Atmos	Amb	III	111 211	Integ Grav	PV	Restr	II	G-1	NR	Vent F	Yes	151.55 1 (e)	I-D	N/A	G
1,4-Dioxane	Atmos	Amb	II	111 211	Integ Grav	PV	Closed	II	G-1	Inerted	Vent F	Yes	No	I-C	N/A	G
Di-n-propylamine	Atmos	Amb	II	111 211	Integ Grav	PV	Restr	II	G-1	NR	Vent F	Yes	151.55 1 (c)	I-C	N/A	G

TABLE 151.05-SUMMARY OF MINIMUM REQUIREMENTS

CARGO IDENTIFICATION				CARGO SEGREGATION	TANKS			CARGO TRANSFER		ENVIRONMENTAL CONTROL		FIRE PROTECTION	SPECIAL REQ.	ELECT HAZARD	TEMP. CONTROL	TANK INTERNAL
NAME	PRESSURE	TEMP	HULL TYPE	TANK	TYPE	VENT	GAGING	PIPING CLASS	CONTROL	CARGO TANKS	CARGO HANDLING SPACE	REQUIRED	SECTION	GROUP CLASS	INSTALL	INSPEC
Ethylamine (72% or less)	Atmos	Amb	II	1i1 2i1	Integ Grav	PV	Closed	II	G-1	NR	Vent F	Yes	151.55 1 (b)	I-D	N/A	G
Ethyl Cyclohexylamine	Atmos	Amb	III	1i1 2i1	Integ Grav	PV	Restr	II	G-1	NR	Vent F	Yes	151.55 1 (b)	I-C	N/A	G
Ethylene Dibromide*	Atmos	Amb	II	1i1 2i	Integ Grav	PV	Closed	II	G-1	NR	Vent F	No	No	N/A	N/A	G
2-Ethyl Hexyl Acrylate (inhibited)	Atmos	Amb	III	1i 2i1	Integ Grav	Open	Open	II	G-1.	NR	Vent N	Yes	No	N/A	N/A	G
Ethylidene Norbornene (inhibited)	Atmos	Amb	II	1i1 2i1	Integ Grav	PV	Closed	II	G-1	NR	Vent F	Yes	151.50-5 & 74	I-C	N/A	G
Ethyl n-Butylamine	Atmos	Amb	III	1i1 2i1	Integ Grav	PV	Restr	II	G-1	NR	Vent F	Yes	151.55 1 (b)	I-C	N/A	G
Ferric Chloride Solutions	Atmos	Amb	III	1i1 2i1	Integ Grav	Open	Open	II	G-1	NR	Vent N	No	151.50-20 & 75	I-B	N/A	4 yr
Hexamethylenediamine	Atmos	Amb	III	1i 2i	Integ Grav	PV	Restr	II	G-1	NR	Vent F	Yes	151.55 1 (c)	N/A	N/A	G
Hydrochloric Acid, Spent (10% or less)	Atmos	Amb	III	1i1 2i1	Integ Grav	Open	Open	II	G-1	NR	Vent F	No	151.50-75(c) 151.50-76	I-B	N/A	4 yr
Hydrofluorosilicic Acid (25% or less)	Atmos	Amb	II	1i1 2i1	Indep Grav	PV	Closed	II	G-1	NR	Vent F	No	151.50-20 & 77	I-B	N/A	4
2-Hydroxyethyl Acrylate (inhibited)	Atmos	Amb	I	1i1 2i	Integ Grav	PV	Closed	I	G-1	NR	Vent F	Yes	151.50 5	N/A	N/A	G
Industrial Wastes containing Dimethyldisulfide, Methyl Mercaptan, and Methomyl	Atmos	Amb	III	1i 2i1	Integ Grav	PV	Restr	II	G-1	NR	Vent F	Yes	151.50-78	I-D	N/A	G
Methylacetylene Propadiene Mixture	Press	Amb	III	1 N/A 2i1	Indep Press	SR	Restr	II	F-2	NR	Vent F	Yes	151.50-79	I-D	N/A	G
Methyl-tertiary-Butyl Ether	Atmos	Amb	III	1i 2i1	Integ Grav	PV	Restr	II	G-1	NR	Vent F	Yes	None	I-C	No	G
2-Methyl Pyridine	Atmos	Amb	III	1i 2i1	Integ Grav	PV	Restr	II	G-1	NR	Vent F	Yes	151.55 -1 (c)	I-D	No	G
2-Methyl-5-Ethyl Pyridine	Atmos	Amb	III	1i 2i	Integ Grav	Open	Open	II	G-1	NR	Vent N	Yes	151.55 1 (g)	N/A	N/A	G
alpha-Methyl Styrene (Inhibited)	Atmos	Amb	III	1i 2i1	Integ Grav	PV	Restr	II	G-1	NR	Vent F	Yes	No	I-D	N/A	G
Nitric Acid (70% or less)	Atmos	Amb	II	1i1 2i1	Integ Grav	PV	Restr	II	G-1	NR	Vent F	No	151.50-20 & 80	I-B	N/A	4 yr
Nitrobenzene	Atmos	Amb	I	1i1 2i1	Integ Grav	PV	Closed	I	G-1	NR	Vent F	Yes	151.50 -5	N/A	N/A	G
1- or 2-Nitropropane	Atmos	Amb	III	1i1 2i1	Integ Grav	PV	Restr	II	G-1	NR	Vent F	Yes	151.50-81	I-C	N/A	G

TABLE 151.05-SUMMARY OF MINIMUM REQUIREMENTS

CARGO IDENTIFICATION				CARGO SEGRE-GATION	TANKS			CARGO TRANSFER		ENVIRONMENTAL CONTROL						
NAME	PRESSURE	TEMP	HULL TYPE	TANK	TYPE	VENT	GAGING	PIPING CLASS	CONTROL	CARGO TANKS	CARGO HANDLING SPACE	FIRE PROTECTION REQUIRED	SPECIAL REQ. SECTION	ELECT HAZARD GROUP CLASS	TEMP. CONTROL INSTALL	TANK INTER-NAL INSPEC
1,3 Pentadiene (Inhibited)	Atmos	Amb	III	1i 2ii	Integ Grav	PV	Restr	II	C-1	NR	Vent F	Yes	No	I-D	N/A	G
Perchloroethylene	Atmos	Amb	III	1i 2i	Integ Grav	PV	Restr	II	C-1	NR	Vent F	No	No	N/A	N/A	G
Phthalic Anhydride	Atmos	Elev	III	1ii 2ii	Integ Grav	PV	Restr	II	C-1	NR	Vent F	Yes	No	N/A	N/A	G
Polyethylenemamine	Atmos	Amb	III	1i 2i	Integ Grav	Open	Open	II	C-1	NR	Vent N	Yes	151.55 1 (e)	N/A	N/A	G
Polymethylene-polyphenyl-isocyanate	Atmos	Amb	II	1ii 2i	Integ Grav	PV	Closed	II	C-1	*	Vent F	Yes	151.55-1 (e)	N/A	N/A	G
Polyvinylbenzyltrimethyl Ammonium Chloride Solution	Atmos	Amb	II	III 2i	Integ Grav	Open	Open	II	C-1	NR	Vent N	No	151.50-82	N/A	N/A	G
iso-Propylamine	Atmos	Amb	II	III 2ii	Integ Grav	PV	Closed	II	C-1	NR	Vent F	Yes	151.55-1 (c)	I-D	N/A	G
Pyridine	Atmos	Amb	III	1i 2ii	Integ Grav	PV	Restr	II	C-1	NR	Vent F	Yes	151.55-1 (e)	I-D	N/A	G
Sodium Chlorate Solution (45% or less)	Atmos	Amb	III	1i 2i	Integ Grav	Open	Open	II	C-1	NR	Vent N	No	No	NR	NR	G
Sodium Sulfide, Hydrosulfide Solutions (H_2S 15ppm or less)	Atmos	Amb	III	1i 2i	Integ Grav	Open	Open	II	C-1	NR	Vent N	No	151.50-83 151.55-1(b)	N/A	N/A	G
Sodium Sulfide, Hydrosulfide Solutions (H_2S greater than 15ppm but less than 200ppm)	Atmos	Amb	III	1ii 2i	Integ Grav	PV	Restr	II	C-1	NR	Vent F	No	151.50-83 151.55-1(b)	N/A	N/A	G
Sodium Sulfide, Hydrosulfide Solutions (H_2S greater than 200 ppm)	Atmos	Amb	II	1ii 2i	Integ Grav	PV	Closed	II	C-1	NR	Vent F	No	151.50-83 151.55-1(b)	N/A	N/A	G
Sulfur Dioxide	Press	Amb	I	1 N/A 2ii	Indep Press	SR	Closed	I	P-2.	NR	Vent F	No	151.50-84	N/A	N/A	2yr
Tetraethylene Pentamine	Atmos	Amb	III	1i 2ii	Integ Grav	Open	Open	II	C-1	NR	Vent N	Yes	151.55-1 (c)	N/A	N/A	G
Toluene Diisocyanate	Atmos	Amb	I	1ii 2ii	Integ Grav	PV	Closed	I	C-1	*	Vent F	Yes	151.50-1 151.55-1 (e)	N/A	N/A	G
Trichloroethylene	Atmos	Amb	III	1i 2i	Integ Grav	PV	Restr	II	C-1	NR	Vent F	No	No	D	N/A	G
1,2,3-Trichloropropane	Atmos	Amb	II	1ii 2i	Integ Grav	PV	Restr	II	C-1	NR	Vent F	Yes	151.50-85	N/A	N/A	G
Triisopropanolamine	Atmos	Amb	III	1i 2i	Integ Grav	Open	Open	II	C-1	NR	Vent N	Yes	151.55-1 (c)	N/A	N/A	G
Triethylamine	Atmos	Amb	II	1ii 2ii	Integ Grav	PV	Restr	II	C-1	NR	Vent F	Yes	151.55-1 (e)	I-C	N/A	G

BILLING CODE 4910-14-C

§ 151.05 [Amended]

3. By inserting in the footnotes of Table 151.05–1 betwen "Gauging devices" and "General usage":

* Padded with dry nitrogen (100 ppm or less of water)

§ 151.50–20 [Amended]

4. By inserting the following in § 151.50–20(b)(1) between Hydrochloric Acid and Phosphoric Acid: Hydrofluorosilicic Acid—50 pounds per square inch gage.

5. By adding the following new sections to Subpart 151.50 after § 151.50–65:

§ 151.50–71 Benzene-hydrocarbon mixtures (containing acetylenes).

(a) Copper, silver, mercury, or other acetylide forming metals and their alloys must not be used as materials of construction for tanks, pipelines, valves, fittings, and other items of equipment that may come in contact with the cargo liquid or vapor.

§ 151.50–73 Cresylate spent caustic.

Protective clothing (eye goggles, gloves, apron, and boots) must be worn during cargo transfer and tank gauging operations.

§ 151.50–74 Ethylidene norbornene (inhibited).

Rubber hoses or fittings may not be used in transfer operations.

§ 151.50–75 Ferric chloride solution.

(a) A containment system (cargo tank piping system, venting system, and gauging system) carrying this solution must be lined with rubber, corrosion resistant plastic, or a material approved by the Commandant (G–MHM).

(b) Protective clothing must be worn during cargo transfer and tank gauging operation.

§ 151.50–76 Hydrochloric acid, spent (NTE 10%).

(a) (1) Gravity type cargo tanks must be designed and tested to meet the rules of the American Bureau of Shipping for a head of water at least 8 feet above the tank top or the highest level the lading may rise, whichever is greater. The plate thickness of any part of the tank may not be less than three-eighths inch. A shell plating of a barge may not be on the boundary of any part of the cargo tank.

(2) Gravity tank vents must—

(i) Terminate above the weatherdeck, clear of all obstructions and away from any from any source of ignition; and

(ii) Be fitted with a single flame screen or two fitted flame screens as described in § 151.03–25. Neither a shut-off valve nor a frangible disk may be fitted in the vent lines.

(b) Openings in tanks are prohibited below deck, except for access openings used for inspection and maintenance of tanks, or unless otherwise specifically approved by the Commandant (G–MHM). Openings must be fitted with bolted cover plates and acid-resistant gaskets.

(c) Where special arrangements are approved by the Commandant (G–MHM) to permit a pump suction to be led from the bottom of the tank, the filling and discharge lines must be fitted with shutoff valves located above the weatherdeck or operable from it.

(d) The outage may not be less than 1 percent.

(e) An enclosed compartment containing, or a compartment adjacent to, a cargo tank—

(1) May have no electrical equipment that does not meet or exceed class I–B electrical requirements; and

(2) Must have at least one gooseneck vent of 2.5 inch diameter or greater. The structural arrangement of the compartment must provide for the free passage of air and gases to the vent or vents.

(f) No lights may be used during the cargo transfer operations, except installed electric or portable battery lights. Smoking is prohibited and the person in charge of cargo transfer shall ensure that "No Smoking" signs are displayed during cargo transfer operations.

(g) Tanks approved for the transportation of acid cargoes subject to this section may not be used for the transportation of any other commodity, except upon authorization by the Commandant (MHM).

(h) Each cargo tank must be examined internally at least once in every 4 years. If the lining of the cargo tank has deteriorated in service or is not in place, the Marine Inspector may require the tank to be tested by such nondestructive means as he may consider necessary to determine its condition.

§ 151.50–77 Hydrofluorosilicic acid (25% or less).

(a) Hydrofluorosilicic acid must be carried in gravity or pressure type cargo tanks independent of the vessel's structure. The tanks must be lined with rubber or other equally suitable material approved by the Commandant (G–MHM). See § 151.15–3(f)(2).

(b) Notwithstanding the provisions of § 151.50–20(b)(3), no compressed air may be used to discharge hydrofluorosilicic acid from gravity type cargo tanks unless—

(1) The tanks are of cylindrical shape with dished heads, and

(2) The air pressure does not exceed—

(i) The design pressure of the tank, and

(ii) 10 pounds per square inch gage.

The tanks must be fitted with pressure relief devices.

(c) During cargo transfer, a water hose must be connected to a water supply and be ready for immediate use. Any leakage or spillage of acid must be immediately washed down. This requirement can be met by facilities provided from shore.

§ 151.50–78 Industrial wastes (containing dimethyldisulfide, methyl mercaptan, and methomyl).

(a) Protective clothing must be worn during cargo transfer and tank gauging operations.

§ 151.50–79 Methyl acetylene-propadiene mixture.

(a) The composition of the methyl acetylene-propadiene mixture at loading must be within one of the following sets of composition limits:

(1) Composition 1 is—

(i) Maximum methyl acetylene to propadiene molar ratio of 3 to 1;

(ii) Maximum combined concentration of methyl acetylene and propadiene of 65 mole percent;

(iii) Minimum combined concentration of propane, butane, and isobutane of 24 mole percent, of which at least one-third (on a molar basis) must be butanes and one-third propane; and

(iv) Maximum combined concentration of propylene and butadiene of 10 mole percent.

(2) Composition 2 is—

(i) Maximum methyl acetylene and propadiene combined concentration of 30 mole percent;

(ii) Maximum methyl acetylene concentration of 20 mole percent;

(iii) Maximum propadiene concentration of 20 mole percent;

(iv) Maximum propylene concentration of 45 mole percent;

(v) Maximum butadiene and butylenes combined concentration of 2 mole percent;

(vi) Minimum saturated C_4 hydrocarbon concentration of 4 mole percent; and

(vii) Minimum propane concentration of 25 mole percent.

(b) A barge carrying a methyl acetylene-propadiene mixture must have a refrigeration system that doese not compress the cargo vapor or have a refrigeration system with the following features:

(1) A vapor compressor that does not raise the temperature and pressure of

the vapopr above 60°C (140°F) and 1.72 MPa gauge (250 psig) during its operation, and that does not allow vapor to stagnate in the compressor while it continues to run.

(2) At the discharge piping from each compressor stage or each cylinder in the same stage of a reciprocating compressor—

(i) Two temperature actuated shutdown switches set to operate at 60°C (140°F) or less;

(ii) A pressure actuated shutdown switch set to operate at 1.72 MPa gauge (250 psig) or less; and

(iii) A safety relief valve set to relieve at 1.77 MPa gauge (256 psig) or less anywhere except into the compressor suction line.

(c) The piping system, including the cargo refrigeration system, for tanks to be loaded with methyl acetylene-propadiene mixture must be completely separate from piping and refrigeration systems for other tanks. If the piping system for the tanks to be loaded with methyl acetylene-propadiene mixture is not independent, the required piping separation must be accomplished by the removal of spool pieces, valves or other pipe sections and the installation of blank flanges at these locations. The required separation applies to all liquid and vapor piping, liquid and vapor vent lines and any other possible connections, such as common inert gas supply lines.

§ 151.50-80 Nitric acid (70% or less).

(a) Tanks, cargo piping, valves, fittings, and flanges (where exposed to the acid) must be lined with nitric acid resistant rubber or fabricated from nitric acid resistant stainless steel.

(b) During cargo transfer, a water hose must be connected to a water supply, ready for immediate use. Any leakage or spillage of acid must be immediately washed down. This requirement can be met by facilities provided from shore.

(c) Nitric acid contaminated by other chemicals, oils, solvents, etc. may not be transported in bulk without an authorization from the Commandant (G-MHM).

§ 151.50-81 1- or 2-Nitropropane.

(a) Must not be carried in a tank equipped with heating coils unless the heating supply to the coils is disconnected.

(b) Must not be carried in a tank adjacent to another tank containing an elevated temperature cargo.

(c) Must not be carried in a deck tank.

§ 151.50-82 Polyvinylbenzyltrimethyl ammonium chloride solution.

(a) Persons involved with cargo transfer operations shall wear protective clothing.

§ 151.50-83 Sodium sulfide, hydrosulfide solutions.

(a) Protective clothing must be worn during cargo transfer operations.

§ 151.50-84 Sulfur dioxide.

(a) Sulfur dioxide that is transported under the provisions of this part may not contain more than 100 ppm of water.

(b) Cargo piping must be at least Schedule 40 pipe.

(c) Flanges must be 150 lb. A.N.S.I. Standard minimum with tongue and groove or raised face.

(d) A cargo tank must—

(1) Meet the requirements of a Class I welded pressure vessel;

(2) Be designed for a maximum allowable working pressure of at least 125 psig;

(3) Be hydrostatically tested every two years to at least 188 psig;

(4) Be provided with one or more manholes that are fitted with a cover sized not less than 15 inches by 23 inches or 13 inches nominal diameter, located above the maximum liquid level, and as close as possible to the top of the tank;

(5) Have no openings other than those required in paragraph (d)(4) of this section;

(6) Have no liquid level gauges other than closed or indirect gauges;

(7) Have all valves and the closed gauge that is required by Table 151.05 bolted to the cover or covers that are required in paragraph (d)(4) of this section;

(8) Have a metal housing that is fitted with a drain and vent connection protecting all valves and the closed gauge within this housing against mechanical damage;

(9) Have all safety relief valves discharging into the protective housing;

(10) Not be interconnected with another cargo tank by piping or manifold that carries cargo liquid, except vapor lines connected to a common header; and

(11) Have an excess flow valve that is located on the inside of the tank for every liquid and vapor connection, except the safety relief valve;

(12) Have no bypass opening on any excess flow valve.

(e) Cargo transfer operations—

(1) May not be conducted with more than one cargo tank at a time unless each tank is filled from or discharged to shore tanks through separate lines;

(2) Must be conducted with connections between fixed barge piping and shore piping of either Schedule 40 pipe having flexible metallic joints that meet § 151.04-5(h) or of flexible metallic hose that is acceptable to the Commandant (G-MHM);

(3) From barge to shore must be by pressurization with an oil free, non-reactive gas that has a maximum of 100 ppm moisture;

(4) Must be conducted with vapor return to shore connections that ensure that all vapor is returned to shore; and

(5) Must be conducted with every person on the barge carrying a respiratory protective device that protects the wearer against sulfur dioxide vapors and provides respiratory protection for emergency escape from a contaminated area that results from cargo leakage.

(f) Respiratory protective equipment must be of a size and weight that allows unrestricted movement and wearing of a lifesaving device.

(g) After the completion of cargo transfer, all liquid sulfur dioxide in the cargo piping must be removed and cargo transfer piping must be disconnected at the cargo tanks. After the cargo piping is disconnected, both ends of the line must be plugged or fitted with blind flanges.

§ 151.50-85 1,2,3-Trichloropropane.

(a) Aluminum may not be used as a material of construction for tanks, pipelines, valves, fittings, and other items of equipment that may come in contact with the cargo liquid or vapor.

(b) Protective clothing (goggles, gloves, boots, and apron) must be worn by persons involved in cargo transfer operations.

(46 U.S.C. 170, 379a; 49 CFR 1.46(n)(4) and (t))

Dated: June 25, 1980.

Henry H. Bell,

Rear Admiral, U.S. Coast Guard, Chief, Office of Merchant Marine Safety.

[FR Doc. 80-19668 Filed 7-2-80; 8:45 am]

BILLING CODE 4910-14-M

National Highway Traffic Safety Administration

49 CFR Part 571

[Docket No. 80-11; Notice 1]

Federal Motor Vehicle Safety Standards, Lamps, Reflective Devices and Associated Equipment

AGENCY: National Highway Traffic Safety Administration (NHTSA), Department of Transportation.

ACTION: Notice of request for comments.

SUMMARY: The purpose of this notice is to ask for comments whether the National Highway Traffic Safety

Administration should propose an amendment to Safety Standard No. 108, *Lamps, Reflective Devices and Associated Equipment*, to specify performance requirements and test procedures for boat trailer lamps. This notice was issued in response to a petition for rulemaking.

The standard currently does not differentiate between lamps for use in boat trailers. The primary purpose of the notice is to ask whether performance criteria should be established for lamps that may on occasion, be submerged in water. The performance criteria that would be established would require a higher level of performance for lamps intended for use on boat trailers.

DATES: Comment closing date: October 1, 1980.

ADDRESSES: Comments should refer to the docket number and notice number and be submitted to: Docket Section, Room 5108 Nassif Building, 400 Seventh Street, SW., Washington, D.C. 20590. (Docket hours 8:00 a.m. to 4:00 p.m.)

FOR FURTHER INFORMATION CONTACT: John Simeroth, Office of Vehicle Safety Standards, National Highway Traffic Safety Administration, Washington, D.C. 20590 (202-426-1351).

SUPPLEMENTARY INFORMATION: Dry Launch, of Livermore California, a division of Sierra Products, Inc. has petitioned NHTSA to amend Standard No. 108 to require a test procedure for water resistance of boat trailer lamps. The petition alleged that a large number of the estimated 8 million boat trailers in use have inoperable rear lamps due to thermal shock and water damage to the bulb socket and metal parts.

Although NHTSA does not have accident data to determine whether this is a significant safety problem, it granted the petition in order to examine the matter further. Depending upon the data received the agency may engage in rulemaking or, if the problem is a limited one, elect to treat the matter on an *ad hoc* basis as a safety related defect. Questions for which the agency seeks specific information from commenters include:

(1) Are there any data relevant to the frequency and time period in which boat trailer lamps fail because of thermal shock and/or other water damage, including corrosion?

(2) Is there any indication that other problems, such as formation of moisture, or dirt film coating on the lens may cause a boat trailer lamp to be ineffective?

(3) Is there any indication that boat trailer lamps need to be replaced more often than lamps on trailers that are not, from time to time, immersed in water?

(4) Are there any data which show that boat trailers have a higher accident rate than other trailers similar in size and pattern of use, or other accident data related to boat trailer safety?

(5) Assuming that boat trailer lamps have a higher failure rate than lamps used on other trailers what methods or devices could be used to reduce boat trailer lamp failure? Would cutoff switches to avoid thermal shock or revised mounting requirements be feasible solutions to the problem?

(6) With respect to methods proposed in responding to question 5, how would alternative approaches be tested or evaluated? What are the design problems and costs associated with each such approach? Is the salt spray (fog) test in accordance with American Society of Testing and Materials Standard B-117, August 1964, an appropriate test, either as written or with modifications? Petitioner suggests a test in which lamps be heated to 200° F and submerged for 15 minutes in water at 55±5° F, then removed and examined for evidence of water in the chamber, and a similar submersion test at 55±5° F for reflectors at ambient temperature, with no evidence of water between the reflector and the surface to which it is sealed. Is this a feasible test?

This notice has been evaluated under the criteria of Executive Order 12044 "Improving Government Regulations" and under Departmental guidelines implementing that order. A copy of the evaluation may be obtained by writing NHTSA Docket Section at the address given at the beginning of this notice. The agency concluded that the indeterminancy of the nature and level of the requirements and test conditions, and, therefore, the indeterminancy also of the impact of the rulemaking precluded anything but the most general evaluation of this notice. Any more precise analysis would be speculative at best.

The engineer and lawyer primarily responsible for the development of this notice are John Simeroth and Taylor Vinson respectively.

Interested persons are invited to submit comments on the notice. It is requested but not required that 10 copies be submitted.

All comments must be limited not to exceed 15 pages in length. Necessary attachments may be appended to these submissions without regard to the 15 page limit. This limitation is intended to encourage commenters to detail their primary arguments in a concise fashion.

If a commenter wishes to submit certain information under a claim of confidentiality, three copies of the complete submission, including purportedly confidential information, should be submitted to the Chief Counsel, NHTSA, at the street address given above, and seven copies from which the purportedly confidential information has been deleted should be submitted to the Docket Section. Any claim of confidentiality must be supported by a statement demonstrating that the information falls within 5 U.S.C. section 552(b)(4), and that disclosure of the information is likely to result in substantial competitive damage; specifying the period during which the information must be withheld to avoid that damage; and showing that earlier disclosure would result in that damage. In addition, the commenter or, in the case of a corporation, a responsible corporate official authorized to speak for the corporation must certify in writing that each item for which confidential treatment is requested is in fact confidential within the meaning of section 552(b)(4) and that a diligent search has been conducted by the commenter or its employees to assure that none of the specified items has previously been disclosed or otherwise become available to the public.

All comments received before the close of business on the comment closing date indicated above will be considered, and will be available for examination in the docket at the above address both before and after that date. To the extent possible, comments filed after the closing date will also be considered. However, the rulemaking action may proceed at any time after that date, and comments received after the closing date and too late for consideration in regard to the action will be treated as suggestions for future rulemaking. The NHTSA will continue to file relevant material as it becomes available in the docket after the closing date, and it is recommended that interested persons continue to examine the docket for new material.

Those persons desiring to be notified upon receipt of their comments in the rules docket should enclose, in the envelope with their comments, a self addressed stamped postcard. Upon receiving the comments, the docket supervisor will return the postcard by mail.

(Secs. 103, 119, Pub. L. 89-563, 80 Stat. 718 (15 U.S.C. 1392, 1407); delegation of authority at 49 CFR and 501.8)

Issued on June 26, 1980.

Michael M. Finkelstein,

Associate Administrator for Rulemaking.

[FR Doc. 80-19014 Filed 7-2-80; 8:45 am]

BILLING CODE 4910-59-M

49 CFR Part 571

Federal Motor Vehicle Safety Standards; Grant of Petition for Rulemaking

AGENCY: National Highway Traffic Safety Administration, Department of Transportation.

ACTION: Grant of petition for rulemaking.

SUMMARY: This notice announces the granting by the National Highway Traffic Safety Administration (NHTSA) of a petition filed by the International Brotherhood of Teamsters (Teamsters) requesting that the agency commence a rulemaking proceeding to establish safe entry and exit requirements for commercial vehicles. The Teamsters urged that such requirements were necessary to combat frequent slip and fall injuries to professional drivers. If these requirements were established, these motor vehicles would be required to be manufactured with certain features, such as steps and handholds, to permit safer entrance to and exit from the vehicles.

FOR FURTHER INFORMATION CONTACT: Nelson Erickson, Office of Vehicle Safety Standards, NHTSA, 400 Seventh Street, SW., Washington, D.C. 20590 (202-426-2720).

SUPPLEMENTARY INFORMATION: In a petition filed with the NHTSA, the Teamsters state that they have been trying to get a Federal regulation on safe entry and exit for commercial motor vehicles because of what the Teamsters say is "the alarming frequency of slip and fall injuries among professional drivers." Slip and fall injuries occur at locations on the commercial motor vehicle where the driver must climb upon the vehicles to perform duties related to the operation of the equipment. The three principal categories of slip and fall injuries are: (1) Those which occur when the driver is entering or leaving the cab, (2) those which occur during tractor coupling and uncoupling operations, and (3) those which occur while the driver is loading or unloading cargo or checking its condition.

The Teamsters included data with their petition to show the extent of slip and fall injuries. Between 1966 and 1970, about 40 percent of all injuries caused by commercial motor vehicles in New York were slip and fall injuries. Wisconsin showed about the same percentage in 1969. According to Bureau of Motor Carrier Safety (BMCS) data, 14 percent of all driver personal injury accidents were results of slip and fall accidents.

In response to this situation, BMCS published a final rule prescribing step, handhold, and deck requirements on commercial motor vehicles having a high profile cab-over-engine configuration at 44 FR 43730, July 26, 1979. This particular type of configuration had the highest rate of slip and fall accidents when entering and leaving the cab. In conjunction with this final rule, BMCS also undertook and in-depth research study to probe the need for extending step, handhold, and deck requirements to other types of cabs and to trailers. That study, which is currently in progress, will carefully examine and collect accident/injury data related to slip and falls. BMCS has indicated that it may alter or extend its current rule on step, handhold, and deck requirements after analyzing this study.

In light of the safety problem which appears to exist, this agency will also analyze the BMCS study to determine what actions, if any, NHTSA should take to minimize the likelihood of these slip and fall injuries. Accordingly, the Teamsters petition for rulemaking is granted. By granting this petition, however, NHTSA is not publicly stating that it will eventually adopt some form of step, handhold, and deck requirements for commercial motor vehicles. It may well be that BMCS will take steps that would obviate the need for separate action by NHTSA. NHTSA will carefully examine all the available data in this area, and any other regulatory actions, and make a determination of whether to propose a new Federal motor vehicle safety standard.

(Secs. 103, 119, Pub. L. 89-563, 80 Stat. 718 (15 U.S.C. 1392 and 1407); delegations of authority at 49 CFR 1.50 and 49 CFR 501.8)

Issued on June 26, 1980.

Michael M. Finkelstein,

Associate Administrator for Rulemaking.

[FR Doc. 80-19915 Filed 7-2-80; 8:45 am]

BILLING CODE 4910-59-M

DEPARTMENT OF COMMERCE

National Oceanic and Atmospheric Administration

50 CFR Part 651

New England Fishery Management Council; Correction of Notice of Public Meetings

AGENCY: National Oceanic and Atmospheric Administration/Commerce.

ACTION: Correction of notice of public meetings.

SUMMARY: On June 23, 1980, a Notice in the Federal Register (45 FR 41986-41987) announced public hearings on the development of an interim plan for the management of Atlantic groundfish (cod, haddock, yellowtail flounder). The notice has been changed as follows:

Meeting location: A meeting was omitted that is to be held on July 16, 1980, at the Holiday Inn, Route 1 and 128, Peabody, Massachusetts 01960.

FOR FURTHER INFORMATION CONTACT: Douglas G. Marshall, Executive Director, New England Fishery Management Council, Suntaug Office Park, 5 Broadway, Route 1, Saugus, Massachusetts 01906, Telephone: 617-231-0422.

Dated: June 30, 1980.

Winfred H. Meibohm,

Executive Director, National Marine Fisheries Service.

[FR Doc. 80-20088 Filed 7-2-80; 8:45 am]

BILLING CODE 3510-22-M

Notices

Federal Register
Vol. 45, No. 130
Thursday, July 3, 1980

This section of the FEDERAL REGISTER contains documents other than rules or proposed rules that are applicable to the public. Notices of hearings and investigations, committee meetings, agency decisions and rulings, delegations of authority, filing of petitions and applications and agency statements of organization and functions are examples of documents appearing in this section.

DEPARTMENT OF AGRICULTURE

Forest Service

Chippewa National Forest Land and Resource Management Plan, Beltrami, Cass, and Itasca Counties, Minnesota; Revision of Notice of Intent To Prepare an Environmental Impact Statement

A notice of intent to prepare an environmental impact statement on the proposed Land and Resource Management Plan for the Chippewa National Forest in Minnesota was published in the Federal Register Vol. 45, No. 109, p. 37711, Wednesday, June 4, 1980.

The eighth paragraph of the notice of intent is hereby revised as follows:

James E. Brewer, Supervisor of the Chippewa National Forest, is the responsible official in charge of preparation and implementation of the plan. Steve Yurich, Regional Forester of the Eastern Region, is responsible for approval of the plan.

All other conditions of the notice of intent remain the same.

James H. Freeman,

Director, Planning, Programming, Budgeting.

June 25, 1980.

[FR Doc. 80-20030 Filed 7-2-80; 8:45 am]

BILLING CODE 3410-11-M

Coal Leasing Within Thunder Basin National Grassland; Medicine Bow National Forest, Campbell and Converse Counties, Wyo.; Intent To Apply Coal Unsuitability Criteria and Prepare an Environmental Assessment

Pursuant to Section 102(2)(C) of the National Environmental Policy Act, 40 CFR 1500 Council on Environemtnal Quality—National Environmental Policy Act, 36 CFR Part 219 National Forest System Land and Resource Management Planning, and 43 CFR 3461.1 Bureau of Land Management Coal Unsuitability Critera; the Forest Service, Department of Agriculture, will apply Coal Unsuitability Criteria and prepare an Environmental Assessment that documents alternatives for leasing coal within two preference right lease application (PRLA) areas.

The reason for the proposed Assessment is to make certain the Thunder Basin Multiple Use Plan reflects current statutory requirements and policies, and to comply with requirements of the Surface Mining and Control and Reclamation Act of 1977.

The application of Coal Unsuitability Criteria and the Assessment, planned for completion in August of 1980, will identify areas acceptable for further consideration for coal leasing. The Assessment will be followed by Bureau of Land Management activity planning which includes preparation of a regional Environmental Impact Statement for lease sales.

The PRLA areas are part of the Powder River Coal Region, located in the Thunder Basin National Grasslands, Campbell and Converse Counties, Wyoming. One area consists of 520 acres approximately 12 miles east of Wright, Wyoming along Highway 450. The second area is approximately 2400 acres, 30 miles southeast of Wright, Wyoming along Dull Center Road.

The alternatives in the Assessment are consistent with Section 219.16, CFR Part 219 National Forest System Land and Resources Management Planning. Application of Coal Unsuitability Criteria for potential coal lease areas, other than the 2 PRLA areas, will be addressed in a Forest Plan for the Medicine Bow National Forest and Thunder Basin National Grassland. A notice of intent to file an Environmental Impact Statement on the Forest Plan was published in the Federal Register, vol. 45, No. 30, page 9305 on Tuesday, February 12, 1980.

The interdisciplinary team involved in application of the Coal Unsuitability Criteria and preparation of the Assessment includes wildlife, soils, hydrology, landscape architectural, minerals, range, lands, and recreation disciplines.

Alternatives considered in the Assessment include no action until the Forest Plan is completed, consent to the issuance of leases under an amended Multiple Use Plan with appropriate stipulations and mitigation, and denying consent to issuance of leases.

Public participation will be provided in the following ways: (1) Maps will be available for review at Forest Service offices in Douglas and Laramie. These maps illustrate areas where the 20 Bureau of Land Management coal unsuitability criteria (43 Code of Federal Regulations 3461.1) have been applied, areas where criteria do not apply, areas to which a criterion would apply, and areas to which a criterion and exception have been applied. (2) A draft Enviromental Assessment will be available for public review in July 1980. Thirty days will be allowed for public review and comment.

Public comments will be considered in preparation of a Final Environmental Assessment which will be completed and available to the public in August 1980.

For further information contact Stan Kurcaba, at the Forest Service, Larmie, Wyoming, 605 Skyline Drive, Laramie, Wyoming, 82070, phone (307) 745-8971.

Dated: June 25, 1980.

D. L. Rollens,

Forest Supervisor.

[FR Doc. 80-20043 Filed 7-2-80; 8:45 am]

BILLING CODE 3410-11-M

Environmental Impact Statement, Lower Salt River Recreation Area; Tonto National Forest, Maricopa County, Ariz.; Cancellation Notice

A draft environmental impact statement for the Lower Salt River Recreation Area was distributed to the public and filed with the Environmental Protection Agency on February 15, 1979.

I am terminating the EIS process because 1) the land management plan for the Tonto National Forest will consider the issues and concerns dealing with land allocations on the Lower Salt River, 2) the Central Arizona Water Control Study recommendations will be made by the summer of 1982. The Tonto National Forest is one of the agencies providing data for this complex study.

The Forest Land Management Plan will be developed according to the regulations for land and resource management plans for the National Forest System (36 CFR 219). The plan will be completed by June 1983.

Dated: June 24, 1980.

James L. Kimball,

Forest Supervisor.

[FR Doc. 80-20028 Filed 7-2-80; 8:45 am]

BILLING CODE 3410-11-M

Medicine Bow National Forest; Meeting

June 10, 1980.

The Medicine Bow National Forest Grazing Advisory Board will meet July 21, 1980 at 8:00 a.m. at the Medicine Bow National Forest Supervisor's Office, 605 Skyline Drive, Laramie, Wyoming 82070. The Board and Forest Service personnel will then proceed to look at proposed range improvement projects and allotment plans on the Hayden District.

The Board will make recommendations concerning the development of allotment management plans and utilization of range betterment funds.

The meeting will be open to the public. Persons who wish to attend and participate should notify Don Schmidtlein, Medicine Bow National Forest (307-745-8971) prior to the meeting date. Public members may participate in discussions during the tour at any time or may file a written statement following the meeting.

James R. Novak,

Acting Forest Supervisor.

[FR Doc. 80-20045 Filed 7-2-80; 8:45 am]

BILLING CODE 3410-11-M

CIVIL AERONAUTICS BOARD

[Docket 36595]

Competitive Marketing of Air Transportation; Notice of Hearing

Notice is hereby given, pursuant to the provisions of the Federal Aviation Act of 1958, as amended, that a hearing in the above-entitled proceeding will be held on August 12, 1980, at 10:00 a.m. (local time) in Room 1003, Hearing Room A, Universal Building North, 1875 Connecticut Avenue, N.W., Washington, D.C., before the undersigned Administrative Law Judge.

For details of the issues involved in this proceeding, interested persons are referred to the Prehearing Conference Report served on January 2, 1980 and the Supplemental Prehearing Conference Report served on May 9, 1980, and other documents which are in the docket of this proceeding on file in the Docket Section of the Civil Aeronautics Board.

Dated at Washington, D.C., June 26, 1980.

William H. Dapper,

Administrative Law Judge.

[FR Doc. 80-20052 Filed 7-2-80; 8:45 am]

BILLING CODE 6320-01-M

[Dockets 33363, 38182, and 28183]

Former Large Irregular Air Service Investigation; and Applications of Elan Air, Corp.; Notice of Hearing

Notice is hereby given, pursuant to the Federal Aviation Act of 1958, as amended, that a hearing in the above-entitled proceeding is assigned to be held on July 29, 1980, at 10:00 a.m. (local time), in Room 1003, Hearing Room B, Universal North Building, 1875 Connecticut Avenue, N.W., Washington, D.C., before the undersigned administrative law judge.

Dated at Washington, D.C., June 30, 1980.

William A. Pope II,

Administrative Law Judge.

[FR Doc. 80-20050 Filed 7-2-80; 8:45 am]

BILLING CODE 6320-01-M

[Dockets 33362, 38073, and 38074]

Former Large Irregular Air Service Investigation; Applications of Global International Airways Corp.; Notice of Hearing

Notice is hereby given, pursuant to the Federal Aviation Act of 1958, as amended, that a hearing in the above-entitled proceeding is assigned to be held on July 24, 1980, at 10:00 a.m. (local time), in Room 1003, Hearing Room B, Universal North Building, 1875 Connecticut Avenue, N.W., Washington, D.C., before the undersigned administrative law judge.

Dated at Washington, D.C., June 27, 1980.

Joseph J. Saunders,

Chief Administrative Law Judge.

[FR Doc. 80-20051 Filed 7-2-80; 8:45 am]

BILLING CODE 6320-01-M

DEPARTMENT OF COMMERCE

International Trade Administration

Exporters' Textile Advisory Committee; Public Meeting

Pursuant to Section 10(a)(2) of the Federal Advisory Committee Act, as amended, 5 U.S.C. App. (1976) notice is hereby given that a meeting of the Exporters' Textile Advisory Committee will be held at 10:00 a.m., on July 29, 1980 in Room 770, No. 6 World Trade Center, New York, New York 10048.

The Committee, which is comprised of 30 members involved in textile and apparel exporting, advises Department officials concerning ways of increasing U.S. exports of textile and apparel products.

The agenda for the meeting is as follows:

1. Review of Export Data.
2. Report on Conditions in the Export Market.
3. Recent Foreign Restrictions Affecting Textiles.
4. Other Business.

A limited number of seats will be available to the public on a first come basis. The public may file written statements with the Committee before or after the meeting. Oral statements may be presented at the end of the meeting to the extent time is available.

Copies of the minutes of the meeting will be made available on written request addressed to the ITA Freedom of Information Officer, Freedom of Information Control Desk, Room 3100, U.S. Department of Commerce, Washington, D.C. 20230.

Further information concerning the Committee may be obtained from Arthur Garel, Director, Office of Textiles and Apparel, Main Commerce Building, U.S. Department of Commerce, Washington, D.C. 20230, telephone: 202/377-5078.

Dated: June 27, 1980.

Arthur Garel,

Acting Deputy Assistant Secretary for Textiles and Apparel.

[FR Doc. 80-20075 Filed 7-2-80; 8:45 am]

BILLING CODE 3510-25-M

National Oceanic and Atmospheric Administration

Acceptance of Competitive Applications for Assistance With Ground-Based Measurements of Solar Variability

AGENCY: National Oceanic and Atmospheric Administration (NOAA), Office of Research and Development, Environmental Research Laboratories.

ACTION: Notice.

SUMMARY: This notice solicits competitive applications for participation in a specific research program for ground-based measurements of Solar variability. It is anticipated that a single grant award will be made to support this program.

DATES: August 5, 1980 is the closing date for receipt of applications at NOAA at the Boulder, CO address shown below. It is contemplated that the grant award can be made by September 30, 1980.

FOR FURTHER INFORMATION CONTACT: David Barr (303) 499-1000, ext. 4325, NOAA, Contracting Office—R59, 325 Broadway, Boulder, CO 80303.

SUPPLEMENTARY INFORMATION:

Announcement: Ground-based Measurements of Solar Variability. Announcement of Competitive Grant Applications. The Environmental Research Laboratories (ERL) of the Office of Research and Development, NOAA, announces that competitive applications for Ground-Based Measurements of Solar Variability will be accepted until August 5, 1980.

Scope of this Announcement:

A. Program Purpose: The need to monitor solar behavior is evident from mounting evidence that indices of solar variations (such as sunspot cycles and sun connected geomagnetic disturbances) are statistically correlated with certain weather and climate changes on the earth. The purpose of the program is to achieve a more comprehensive understanding of the physical basis of climate variation, on time scales of several weeks to decades, as a result of solar variability.

B. Eligible Applicants: Educational institutions, nonprofit institutions, corporations, companies, and others are eligible for consideration.

C. Available Funds: ERL anticipates that one grant will be awarded for approximately $275,000 to support the first year's effort. It is NOAA's intent to noncompetitively extend any resultant grant on a year-to-year basis for the duration of the research program. Grant extension will depend on: (1) availability of funds, and (2) ERL's assessment of the grantee's performance on the project.

Publication of this announcement shall not obligate ERL to award any specific grant, or to obligate the entire amount of funds available or any part thereof.

D. Program Objectives are:

1. To monitor solar behavior through the development, deployment, and operation of ground-based solar observing stations by which the spectral intensity of the direct component of solar energy will be measured.

2. To develop supplemental measurements to facilitate the understanding of both the atmospheric modification of the impinging solar spectral energy and the processes by which solar spectral radiation is thought to modify climate.

E. Application Process: Applications which are late will not be accepted for review. Applications which are incomplete or otherwise do not conform to the application package (Section I) may not be accepted for review. Applicants whose applications are not accepted for review will be so notified. All other applications will be subject to a competitive review and evaluation in accordance with the established review process (Section G). If a decision is made to disapprove a competing grant application, the applicant will be so notified.

F. Criteria for Grant Selection: All applications received as a result of this announcement will be evaluated by a Source Evaluation Board (SEB) in accordance with the evaluations factors outlined below. The evaluation factors will be applied in an identical manner to all applications. The following factors will be given paramount consideration in the awarding of the grant. Point values have been assigned to the evaluation factors to indicate to applicants the relative importance of each of the evaluation factors.

1. Technical approach showing understanding, detailed explanations, and reasonability—40 points

2. Institutional arrangements showing understanding of the long-term needs of the program and statement of commitment—22 points

3. Personnel and organization showing adequate backgrounds and management capability—38 points

Costs will be evaluated to determine whether estimated costs are reasonable and realistic for the services offered. Cost sharing is encouraged in accordance with Federal Management Circular 73-3. Fee or profit will not be paid by NOAA under the grant.

G. Application Review Process: All eligible timely applications will be reviewed and ranked by an SEB composed of a minimum of three NOAA staff members with expertise in the program area. The grant award will be made by NOAA by September 30, 1980.

H. Closing Date for Receipt of Applications: The closing date for receipt of applications is August 5, 1980. An applications will be considered to have arrived on a timely basis if: (1) the application is in the NOAA Contracting Office (Section I) on or before the closing date, or (2) the application is postmarked 5 days prior to the closing date.

I. Requests: Requests for grant application packages should be made to: NOAA, Contracting—R59, 325 Broadway, Boulder, CO 80303 (303)499-1000, ext. 3221. Requests should cite NOAA 67-80(G).

June 26, 1980.

Francis J. Balint,

Acting Director, Office of Management & Computer Systems.

[FR Doc. 80-20040 Filed 7-2-80; 8:45 am]

BILLING CODE 3510-12-M

Mid-Atlantic Fishery Management Council's Atlantic Mackerel Resources Subpanel, Squid Fishery Resources Subpanel, and Butterfish Subpanel; Public Meeting

AGENCY: National Marine Fisheries Service, NOAA.

SUMMARY: The Mid-Atlantic Fishery Management Council, established by Section 302 of the Fishery Conservation and Management Act of 1976 (Pub. L. 94-265), has established Atlantic Mackerel Resources, Squid Fishery Resources, and Butterfish Subpanels, which will meet concurrently to discuss Amendments to the Mackerel, Squid, and Butterfish Fishery Management Plans. The meeting may be lengthened or shortened, or agenda items rearranged, depending upon progress on the agenda.

DATE: The meeting will convene Thursday, July 17, 1980, at 10:00 a.m., and will adjourn at approximately 4:00 p.m. The meeting is open to the public.

ADDRESS: The meeting will be held at the Best Western Airport Inn, Philadelphia, Pennsylvania (215) 365-7000.

FOR FURTHER INFORMATION CONTACT: Mid-Atlantic Fishery Management Council, North and New Streets, Room 2115—Federal Building, Dover, Delaware 19901, Telephone: (302) 674-2331.

Dated: June 27, 1980.

Winfred H. Meibohm,

Executive Director, National Marine Fisheries Service.

[FR Doc. 80-20084 Filed 7-2-80; 8:45 am]

BILLING CODE 3510-22-M

Time Charter of Two Salmon Tenders to Company Under Foreign Control

Notice is hereby given that the Maritime Administration of the Department of Commerce has received an application from Peninsula Salmon, Inc., 5098 Rose Ave., N.E., Bainbridge Island, Washington 98110, for approval of the time charters of the oil screws AMELIE, O.N. 224429, and HEALTH, O.N. 253926, to Peter Pan Seafoods, Inc., 1220 Dexter Horton Building, Seattle, Washington 98104. Such approval is required by Section 9 of the Shipping

Act of 1916, as amended (46 U.S.C. 808) because all of the outstanding stock of Peter Pan Seafood, Inc., a U.S. corporation, is owned by Nichiro Gyogyo, Ltd., a Japanese corporation.

Employment of both vessels is to be in Puget Sound as cannery tender-fish packers during the 1980 salmon season. The registered lengths of the vessels AMELIE and HEALTH are 81.0 and 98.6 feet respectively.

The Maritime Administration is the Federal Agency responsible for the approval or disapproval of applications submitted pursuant to Section 9 of the Shipping Act. However, the Maritime Administration customarily solicits the views of the National Marine Fisheries Service before deciding on applications relating to fishing vessels, and has sought the views of the Service in regard to this application.

Accordingly, the service solicits the written comments of interested persons concerning the subject charters. Such comments should be addressed to the Chief, Financial Services Division, National Marine Fisheries Service, National Oceanic and Atmospheric Administration, Washington, D.C. 20235, and received not later then August 4, 1980. All communications received by such date will be considered before action is taken on this application. No public hearing is contemplated at this time.

Dated: June 27, 1980.

Winfred H. Meibohm,

Executive Director, National Marine Fisheries Service.

[FR Doc. 80-20083 Filed 7-2-80; 8:45 am]

BILLING CODE 3510-22-M

Fisherman's Contingency Fund; Claims

In FR Doc. 80-18021, in the Federal Register of Monday, June 16, 1980, appearing at page 40631, please make the following correction:

On page 40632, in the first column, the very last line reads ". . . 28°55.5′ N 91°94.8 W." This should be corrected to read ". . . 28°55.5′ N 91°49.8 W."

BILLING CODE 1505-01-M

COMMITTEE FOR THE IMPLEMENTATION OF TEXTILE AGREEMENTS

Adjusting the Levels of Restraint for Certain Man-Made Fiber Apparel From Taiwan

AGENCY: Committee for the Implementation of Textile Agreements.

ACTION: Re-establishing a ceiling for man-made fiber sweaters in Category 645/646; specific ceilings for the subcategories covering man-made fiber swimwear and knit and braided headwear within Category 659, produced or manufactured in Taiwan and exported during the agreement period which began on January 1, 1980; and increasing the Category 659 sublimit for knit and braided headwear (only T.S.U.S.A. numbers 703.0500 and 703.1000) by the application of 6 percent growth for the same agreement period.

(A detailed description of the textile categories in terms of T.S.U.S.A. numbers was published in the Federal Register on February 28, 1980 (45 FR 13172), as amended on April 23, 1980 (45 FR 27463)).

SUMMARY: In discussions between the American Institute in Taiwan and the Coordination Council for North American Affairs concerning the Bilateral Cotton, Wool and Man-Made Fiber Textile Agreement of June 8, 1978, as amended, it has been agreed to establish a ceiling for Category 645/646 and specific ceilings for the subcategories of Category 659 in T.S.U.S.A. numbers 380.0429, 380.8163, 382.0449, 382.7877, 703.0500 and 703.1000 during the agreement year which began on January 1, 1980 and extends through December 31, 1980. Pursuant to the terms of this agreement, six percent growth is also being applied to the level of restraint established for the sublimit for knit and braided headwear in Category 659 (only T.S.U.S.A. numbers 703.0500 and 703.1000) during that same twelve-month period.

EFFECTIVE DATE: July 8, 1980.

FOR FURTHER INFORMATION CONTACT: Ronald J. Sorini, International Trade Specialist, Office of Textiles and Apparel, U.S. Department of Commerce, Washington, D.C. 20230 (202/377-5423).

SUPPLEMENTARY INFORMATION: On December 28, 1979, there was published in the Federal Register (44 FR 76839) a letter dated December 21, 1979 from the Chairman of the Committee for the Implementation of Textile Agreements to the Commissioner of Customs which established levels of restraint for certain specified categories of cotton, wool and man-made fiber textile products, producted or manufactured in Taiwan, including Category 659 and its subcategories, which may be entered into the United States for consumption, or withdrawn from warehouse for consumption, during the twelve-month period which began on January 1, 1980 and extends through December 31, 1980. In the letter published below the Chairman of the Committee for the Implementation of Textile Agreements directs the Commissioner of Customs to prohibit entry for consumption, or withdrawal from warehouse for consumption, of man-made fiber textile products in Category 645/646 in excess of the designated level of restraint and to amend the previously established sublimits within Category 659 (only T.S.U.S.A. numbers 380.0429, 380.8163, 382.0449 and 382.7877, 703.0500 and 703.1000). The levels of restraint have not been adjusted to account for any imports after December 31, 1979. Such adjustments will be made for the period which began on January 1, 1980 and extends through the effective date of this action.

Arthur Garel,

Acting Chairman, Committee for the Implementation of Textile Agreements.

June 30, 1980.

June 30, 1980.

Committee for the Implementation of Textile Agreements

Commissioner of Customs,
Department of the Treasury,
Washington, D.C.

Dear Mr. Commissioner: On December 21, 1979, the Chairman, Committee for the Implementation of Textile Agreements, directed you to prohibit entry for consumption, or withdrawal from warehouse for consumption, of cotton, wool and man-made fiber textile products in certain specified categories, produced or manufactured in Taiwan. The Chairman further advised you that the levels of restraint are subject to adjustment.[1]

Under the terms of the Arrangement Regarding International Trade in Textiles done at Geneva on December 20, 1973, as extended on December 15, 1977; pursuant to the Bilateral Agreement of June 8, 1978, as amended, concerning cotton, wool and man-made fiber textile products exported from Taiwan; and in accordance with the provisions of Executive Order 11651 of May 3, 1972, as amended by Executive Order 11951 of January 6, 1977, you are directed, effective on July 8, 1980 and for the twelve-month period beginning on January 1, 1980 and extending through December 31, 1980, to amend the directive of December 21, 1979 to include a level of restraint for Category 645/646 and adjusted levels for the Category 659 sublimits as follows:

Category and Twelve-Month Level of Restraint [2]

645/646—3,785,919 dozen

[1] The term "adjustment" refers to those provisions of the Bilateral Cotton, Wool and Man-Made Fiber Textile Agreement of June 8, 1978, as amended, concerning cotton, wool and man-made fiber textile products from Taiwan which provide, in part, that: (1) within the aggregate and group limits, specific ceilings may be exceeded by designated percentages; (2) those same levels may be increased for carryforward; and (3) administrative arrangements or adjustments may be made to resolve minor problems arising in the implementation of the agreement.

[2] The levels of restraint have not been adjusted to account for any imports after December 31, 1979.

659 pt.[3]—2,888,500 pounds
659 pt.[4]—1,802,000 pounds of which not more than 238,500 pounds shall be in T.S.U.S.A. numbers 380.0429 and 380.8163 and not more than 1,696,000 pounds shall be in T.S.U.S.A. numbers 382.0449 and 382.7877.

In carrying out this directive entries of man-made fiber textile products in Category 645/646, produced or manufactured in Taiwan, which have been exported to the United States prior to January 1, 1980, shall, to the extent of any unfilled balance, be charged against the level of restraint established for such goods during the twelve-month period which began on January 1, 1979 and extended through December 31, 1979. In the event the level of restraint established for that period has been exhausted by previous entries, such goods shall be subject to the level set forth in this letter.

The actions taken with respect to Taiwan and with respect to imports of man-made fiber textile products from Taiwan have been determined by the Committee for the Implementation of Textile Agreements to involve foreign affairs functions of the United States. Therefore, the directions to the Commissioner of Customs which are necessary to the implementation of such actions, fall within the foreign affairs exception to the rule-making provisions of 5 U.S.C. 553. This letter will be published in the Federal Register.

Sincerely,

Arthur Garel,

Acting Chairman, Committee for the Implementation of Textile Agreements.

[FR Doc. 80-19970 Filed 7-2-80; 8:45 am]

BILLING CODE 3510-25-M

Announcing Import Restraint Levels for Certain Cotton, Wool, and Man-Made Fiber Textile Products From Colombia, Effective on July 1, 1980

June 30, 1980.

AGENCY: Committee for the Implementation of Textile Agreements.

ACTION: Establishing import restraint levels for certain cotton, wool and man-made fiber textile products from Colombia during the twelve-month period beginning on July 1, 1980.

SUMMARY: The Bilateral Cotton, Wool and Man-Made Fiber Textile Agreement of August 3, 1978, as amended, between the Governments of the United States and Colombia, establishes specific ceilings for cotton, wool and man-made fiber textile products in Categories 443, 633 and 641, among others, during the agreement year which begins on July 1, 1980 and extends through June 30, 1981. It also establishes consultation levels, among other categories, for cotton textile products in Category 320, wool textile products in Category 444 and man-made fiber textile products in Categories 650 and 666 during that same agreement period. Accordingly, there is published below a letter from the Chairman of the Committee for the Implementation of Textile Agreements to the Commissioner of Customs directing that entry into the United States for consumption, or withdrawal from warehouse for consumption, of cotton, wool and man-made fiber textile products in the foregoing categories be limited to the designated twelve-month levels of restraint. The level of restraint for Category 641 has been adjusted to account for overshipment charges in the amount of 5,702 dozen.

(A detailed description of the textile categories in terms of T.S.U.S.A. numbers was published in the Federal Register on February 28, 1980 (45 F.R. 13172), as amended on April 23, 1980 (45 F.R. 27463)).

This letter and the actions taken pursuant to it are not designed to implement all of the provisions of the bilateral agreement, but are designed to assist only in the implementation of certain of its provisions.

Effective Date: July 1, 1980.

FOR FURTHER INFORMATION CONTACT: William J. Boyd, International Trade Specialist, Office of Textiles, U.S. Department of Commerce, Washington, D.C. 20230 (202/377-5423).

Arthus Garel,

Acting Chairman, Committee for the Implementation of Textile Agreements.

June 30, 1980.

Committee for the Implementation of Textile Agreements

Commissioner of Customs,
Department of the Treasury, Washington, D.C.

Dear Mr. Commisisoner: Under the terms of the Arrangement Regarding International Trade in Textiles done at Geneva on December 20, 1973, as extended on December 14, 1977; pursuant to the Bilateral Cotton, Wool and Man-Made Fiber Textile Agreement of August 3, 1978, as amended, between the Governments of the United States and Colombia; and in accordance with the provisions of Executive Order 11651 of March 3, 1972, as amended by Executive Order 11951 of January 6, 1977, you are directed to prohibit, effective on July 1, 1980, and for the twelve-month period extending through June 30, 1981, entry into the United States for consumption and withdrawal from warehouse for consumption of cotton, wool and man-made fiber textile products, exported from Colombia in the following categories, in excess of the indicated twelve-month levels of restraint:

Category	12-Month Level of Restraint
320	7,000,000 sq. yds.
443	11,519 doz.
444	1,852 doz.
633	75,905 doz.
641	136,424 doz.
650	13,725 doz.
666	128,205 lbs.

In carrying out this directive, entries of cotton, wool and man-made fiber textile products in the foregoing categories, produced or manufactured in Colombia, which have been exported to the United States before July 1, 1980, shall, to the extent of any unfilled balances, be charged against the levels of restraint established for such goods during the twelve-month period beginning on July 1, 1979 and extending through June 30, 1980. In the event the levels of restraint established for that period have been exhausted by previous entries, such goods shall be subject to the levels set forth in this letter.

The levels of restraint set forth above are subject to adjustment in the future according to the provisions of the bilateral agreement of August 3, 1978, as amended, between the Governments of the United States and Colombia, which provide, in part, that: (1) within the applicable group limits of the agreement, specific levels of restraint may be exceeded by designated percentages; (2) these same levels may also be increased for carryover and carryforward up to 11 percent of the applicable category limit; (3) certain consultation levels may be increased within the applicable gorup limits upon agreement between the two governments; and (4) administrative arrangements or adjustments may be made to resolve minor problems arising in the implementation of the agreement. Any appropriate adjustment under the provisions of the bilateral agreement referred to above will be made to you by letter.

A detailed description of the textile categories in terms of T.S.U.S.A. numbers was published in the Federal Register on February 28, 1980 (45 F.R. 13172), as amended on April 23, 1980 (45 F.R. 27463).

In carrying out the above directions, entry into the United States for consumption shall be construed to include entry for consumption into the Commonwealth of Puerto Rico.

The actions taken with respect to the Government of Colombia and with respect to imports of cotton, wool and man-made fiber textile products from Colombia have been determined by the Committee for the Implementation of Textile Agreements to involve foreign affairs functions of the United States. Therefore, the directions to the Commissioner of Customs, which are necessary to the implementation of such

[3] In Category 659, only T.S.U.S.A. numbers 703.0500 and 703.1000.

[4] In Category 659, only T.S.U.A. numbers 380.0429, 380.8163, 382.0449 and 382.7877.

actions, fall within the foreign affairs exception to the rule-making provisions of 5 U.S.C. 553. This letter will be published in the Federal Register.

Sincerely,

Arthur Garel,

Acting Chairman, Committee for the Implementation of Textile Agreements.

[FR Doc. 80-20064 Filed 7-2-80; 8:45 am]

BILLING CODE 3510-25-M

COMMITTEE FOR PURCHASE FROM THE BLIND AND OTHER SEVERELY HANDICAPPED

Procurement List 1980; Additions

AGENCY: Committee for Purchase from the Blind and Other Severely Handicapped.

ACTION: Additions to procurement list.

SUMMARY: This action adds to Procurement List 1980 services to be provided by and a commodity to be produced by workshops for the blind and other severely handicapped.

EFFECTIVE DATE: July 3, 1980.

ADDRESS: Committee for Purchase from the Blind and Other Severely Handicapped, 2009 14th Street North, Suite 610, Arlington, Virginia 22201.

FOR FURTHER INFORMATION CONTACT: C. W. Fletcher, (703) 557-1145.

SUPPLEMENTARY INFORMATION: On February 1, 1980, March 7, 1980, and May 2, 1980, the Committee for Purchase from the Blind and Other Severely Handicapped published notices (45 FR 7276, 45 FR 14914, and 45 FR 29384) of proposed additions to Procurement List 1980, November 27, 1979 (44 FR 67925).

After consideration of the relevant matter presented, the Committee has determined that the services and commodity listed below are suitable for procurement by the Federal Government under 41 U.S.C. 46-48c, 85 Stat. 77.

Accordingly, the following services and commodity are hereby added to Procurement List 1980:

SIC 7369

Commissary Shelf Stocking and Custodial Services
Sheppard Air Force Base, Texas

SIC 7349

Janitorial Service
Department of Energy at the following facilities: Computer Science Center, Technical Support Building, Technical Support Addition, 550 Second Street, Idaho Falls, Idaho

SIC 7349

Janitorial Service
USDA Forest Service Offices
Sequoia National Forest, Porterville, California, at: Supervisor's Office, 900 W. Grand Avenue, Warehouse Complex, 480 N. Henrahan
Janitorial/Custodial Buildings 85 and 90, U.S. Army Reserve Center, Hingham, Massachusetts

Class 7530—No NSN

Divider, Separation, P.S. Item No. 01037A

C. W. Fletcher,

Executive Director.

[FR Doc. 80-19981 Filed 7-2-80; 8:45 am]

BILLING CODE 6820-33-M

Procurement List 1980; Proposed Additions

AGENCY: Committee for Purchase from the Blind and Other Severely Handicapped.

ACTION: Proposed additions to procurement list.

SUMMARY: The Committee has received proposals to add to Procurement List 1980 a commodity to be produced by and a service to be provided by workshops for the blind and other severely handicapped.

COMMENTS MUST BE RECEIVED ON OR BEFORE: August 6, 1980.

ADDRESS: Committee for Purchase from the Blind and Other Severely Handicapped, 2009 14th Street North, Suite 610, Arlington, Virginia 22201.

FOR FURTHER INFORMATION CONTACT: C. W. Fletcher, (703) 557-1145.

SUPPLEMENTARY INFORMATION: This notice is published pursuant to 41 U.S.C. 47(a)(2), 85 Stat. 77. Its purpose is to provide interested parties an opportunity to submit comments on the possible impact of the proposed action.

If the Committee approves the proposed additions, all entities of the Federal Government will be required to procure the commodity and service listed below from workshops for the blind or other severely handicapped.

It is proposed to add the following commodity and service to Procurement List 1980, November 27, 1979 (44 FR 67925):

Class 6530

Pad, Litter, 6530-00-137-3016

SIC 7439

Elevator Operator Service, Federal Building, 35 Ryerson Street, Brooklyn New York

C. W. Fletcher,

Executive Director

[FR Doc. 80-19982 Filed 7-2-80; 8:45 am]

BILLING CODE 6820-33-M

DEPARTMENT OF DEFENSE

Department of the Air Force

Air Force Institute of Technology Subcommittee of the Air University Board of Visitors; Meeting

June 24, 1980.

The Air Force Institute of Technology Subcommittee of the Air University Board of Visitors will hold an open meeting at 1:00 p.m. on August 5, 1980, in Room 2004 (ten seats available), Building 125, Wright-Patterson Air Force Base, Ohio.

The purpose of the meeting is to give the subcommittee the opportunity to present to the Commander, Air Force Institute of Technology, a report of findings and recommendations concerning the Institute's educational programs. The findings of the subcommittee will also be reported to the Commander, Air University, at the next regularly scheduled meeting of the Air University Board of Visitors.

For further information on this meeting, contact Major Robert B. Louder, Chief, Academic Development, Directorate of Educational Plans and Operations, Air Force Institute of Technology, telephone (513) 255-5760 or 3791.

Carol M. Rose,

Air Force Federal Register, Liaison Officer.

[FR Doc. 80-20042 Filed 7-2-80; 8:45 am]

BILLING CODE 3910-01-M

Corps of Engineers, Department of Army

Curtailment of Harbor Maintenance; Maintenance Dredging at One Harbor To Be Deferred

The Corps of Engineers is experiencing severe funding shortages in FY 1980. This funding shortage has required a reduction in the level of maintenance operations which can be performed. During the 1980 navigation season the following project may be affected: Bolles Harbor, Michigan, Maintenance Dredging Deferred—Upstream reach, with an authorized depth of 8 feet and a width of 80 feet will be reduced to a depth of 6 feet and a width of 60'.

Information regarding actual channel conditions will be provided as appropriate by Local Notice to Navigation Interests and other means. Current information on specific channel conditions may be obtained from the Detroit District, P.O. Box 1027, Detroit, Michigan 48231. The above list will be revised from time to time as funding or other conditions warrant.

Dated: June 26, 1980.

Robert V. Vermillion,

Colonel, Corps of Engineers, District Engineer.

[FR Doc. 80-20046 Filed 7-2-80; 8:45 am]

BILLING CODE 3710-GA-M

Curtailment of Harbor Maintenance; Maintenance Dredging at Three Harbors To Be Deferred

The Corps of Engineers is experiencing severe funding shortages in FY 1981. This funding shortage has required a reduction in the level of maintenance operations which can be performed. During the 1981 navigation season the following projects may be affected:

Grand Traverse Bay Hbr., Mi., Maintenance Dredging Deferred—Entrance channel with an authorized depth of 12 feet and a width of 70–100 feet will be reduced to depth of 9 feet and a width of 40–70 feet.

Keweenaw Waterway Hbr., Mi. (Upper Entrance), Maintenance Dredging Deferred—Entrance channel with an authorized depth of 32 feet and a width of 500 feet will be reduced to a depth of 30 feet and a width of 450 feet.

Point Lookout Harbor, Mi., Maintenance Dredging Deferred—Channels, with authorized depths of 6, 10 and 12 feet and a width of 60 feet will be reduced to depths 1 foot less over a width of 60 feet, throughout the harbor.

Information regarding actual channel conditions will be provided as appropriate by Local Notices to Navigation Interests and other means. Current information on specific channel conditions may be obtained from the Detroit District, P.O. Box 1027, Detroit, Mi., 48231. The above list will be revised from time to time as funding or other conditions warrant.

Dated: June 26, 1980.

Robert V. Vermillion,

Colonel, Corps of Engineers, District Engineers.

[FR Doc. 80-20047 Filed 7-2-80; 8:45 am]

BILLING CODE 3710-GA-M

Intent To Prepare a Draft Environmental Impact Statement on the Permit Application by Collier County for an Interim Plan of Hydrologic Restoration of Golden Gate Estates

AGENCY: U.S. Army Corps of Engineers, DoD.

ACTION: Notice of intent to prepare a draft environmental impact statement (DEIS).

SUMMARY: 1. The project consists of placing four earthern canal plugs and raising groundwater levels during the dry season by elevating the crest height of twelve existing water-level control weirs in the drainage canal system of the 180 sq. mi. Golden Gate Estates development area. The stated objective is to reduce the overdrainage of the area, thereby improving conditions for agriculture, restoring wetland communities, and reducing wildfire hazards.

2. Alternatives under consideration are to issue the permit, deny the permit, or issue the permit with conditions.

3. The Scoping Process to identify the range of actions, alternatives, and impacts to be considered in the DEIS is as follows:

a. *Public involvement program.* A Public Notice was issued on 1 February 1980 describing the permit application and soliciting comments from Federal, State and local agencies, and identified interested private organizations and individuals. Further scoping will be obtained by letter requesting comments on the comprehensiveness of the preliminarily identified issues listed below. The interested public is invited to respond

b. *Significant issues.* The following issues have been identified to date and will be analyzed in depth in the DEIS:

(1) Ecological impacts of proposed project.

(2) Any flooding hazards that would be created.

(3) Effects on potential land-use within project area.

(4) Effects on future potable water supply.

c. *Other review and consultation.* Consultation with appropriate Federal and State agencies is required under provisions of the Endangered Species Act, Section 404b of the Clean Water Act, and the National Historic Preservation Act.

4. A scoping meeting is not contemplated.

5. The DEIS is expected to be available for review by the public during the first quarter of CY 1981.

ADDRESS: Questions about the proposed action and DEIS may be referred to Dr. Gerald L. Atmar, Chief, Environmental Studies Section, U.S. Army Corps of Engineers; P.O. Box 4970; Jacksonville, Florida 32232.Telephone 904/791-3615.

Dated: June 20, 1980.

James W. R. Adams,

Colonel, Corps of Engineers, District Engineer.

[FR Doc. 80-20036 Filed 7-2-80; 8:45 am]

BILLING CODE 3710-AJ-M

Intent To Prepare Environmental Impact Statement for River Dredging and Flood Protection

AGENCY: U.S. Army Corps of Engineers, DOD.

ACTION: Notice of intent to prepare a draft environmental impact statement.

SUMMARY: In the matter of remedial dredging of the Columbia River 40-foot navigation channel (Columbia River Miles 63–72 and Cowlitz River Miles 0–4.2) and advanced flood protection works in the Cowlitz and Toutle River Basins—corrective measures in response to damages caused by the volcanic eruption of Mount Saint Helens. 1. The proposed actions are to: (1) restore the Columbia River 40-foot and Cowlitz River navigation channels to their pre-volcanic eruption configurations, and (2) implement those measures necessary to alleviate the immediate threat of major flooding in the Toutle and Cowlitz river basins. (The threat of flooding is the result of extensive watershed damage caused by the volcanic eruptions of Mount Saint Helens, including extensive loss of vegetation, deposition of highly erodible volcanic ash and other debris throughout the watersheds, and nearly total filling and alteration of the Cowlitz and Toutle river channels).

2. Alternatives to restoration of the navigation channels would include the no action alternative and alternative disposal areas for materials removed. Alternative measures for alleviating the threat of flooding would include either singularly or in combination: channel dredging of the Cowlitz and Toutle Rivers to restore pre-volcanic eruption flow capacities; repair and/or strengthening of existing and construction of new flood control structures (levees) in the area of concern; construction of settlement ponds and/or sumps adjacent to the rivers for the purpose of trapping debris carried by high flows; construction of debris restraining structures on the rivers for the purpose of restraining the transport of debris downstream, thus preventing subsequent filling of the channels; other non-structural alternatives such as flood plain evacuation; and no action.

3. Environmental coordination of the Corps emergency planning for the above activities has been initiated through the formulation of an environmental task force consisting of representatives from Federal, state, Indian, and local governmental and resource agencies, and private organizations and parties. The task force first met on 29 May 1980 and has met on several occasions since

that date, both on-site in the field and in Corps planning offices. The task force will be the primary source of information utilized for scoping the DEIS.

Significant issues to be addressed in the DEIS are currently identified as: impacts on fish and wildlife; public health and safety; socio-economics; and water quality.

The DEIS will include considerations under other applicable environmental review and consultation requirements, including the Clean Water, Endangered Species, and Cultural Resources Acts.

4. A specific DEIS scoping meeting is not scheduled. Ongoing task force meetings (described in 3. above) will be utilized in scoping the EIS.

5. The estimated date for providing the DEIS to the public for review is 25 July 1980.

6. Due to the emergency nature of existing conditions and the necessity to protect public health and safety, it is anticipated that some of the above described alternatives will be implemented prior to completion of the DEIS.

7. Questions about the proposed action and DEIS can be answered by: Major James May, U.S. Army Corps of Engineers District, Portland, ATTN: NPPEN-PL-3, P.O. Box 2946, Portland, Oregon 97208; telephone (503) 221-6435.

Terence J. Connell,

Colonel, Corps of Engineers, District Engineer.

[FR Doc. 80-20026 Filed 7-2-80; 8:45 am]

BILLING CODE 3710-AR-M

Corps of Engineers, Department of the Army

Intent To Prepare Draft Environmental Impact Statement; Stillaguamish River Basin, Wash.

AGENCY: U.S. Army Corps of Engineers, Department of Defense, Seattle District.

ACTION: Notice of Intent to Prepare a Draft Environmental Impact Statement (EIS) for a proposed flood damage reduction project in the Stillaguamish River basin in western Washington at Stanwood.

SUMMARY: 1. *Description of Action.* The Stanwood, Washington (Snohomish County), Flood Damage Reduction Study is being conducted under the authority of Section 205 of the 1948 Flood Control Act, as amended. The city of Stanwood is the local sponsor. The project under study consists of levees north and south of the city of Stanwood to provide 100-year or greater protection from flooding of the Skagit and Stillaguamish Rivers. The plan of improvement evaluated in a February 1979 reconnaissance study consisted of a south levee approximately 2.3 miles in length to provide protection to Stanwood from flooding of the Stillaguamish River. One north levee alinement under consideration to provide protection from Skagit River flooding involves raising approximately 0.8 miles of an existing road north of Stanwood. Total acreage protected from flooding by the north and south levees would be about 3,000 acres. These levee alinements and others are currently under detailed study by the Seattle District, U.S. Army Corps of Engineers.

2. *Alternatives.* Alternatives to the plan evaluated in the 1979 reconnaissance study include alternative levee alinements, nonstructural measures, and the "no-action" alternative. The variations among alinements consist largely of differences in length of levees and total acreage protected. The feasibility of nonstructural approaches such as floodproofing will be examined. The no-action alternative includes maintenance of the existing levee system, flood fighting, and continuation of flood-plain management programs for the city of Stanwood.

3. *Public Involvement and Review.* This project is being coordinated with elected and administrative officials of the city of Stanwood and with Federal and state resource agencies, including the U.S. Fish and Wildlife Service, National Marine Fisheries Service, Washington State Department of Fisheries, and the Washington State Department of Game. A newsletter describing the Stanwood Flood Damage Reduction Study was distributed to the public in July 1979. Coordination with Federal, state, and local agencies and the public will continue throughout preparation of the draft EIS.

4. *Significant Issues.* The major, project related environmental impact identified to date is the potential destruction and alteration of wetlands through levee construction, channel excavation, and disposal of dredged materials on wetlands. A major secondary impact is the potential for increased development pressure in agricultural areas incidentally provided a high level of flood protection by the project. Alternative levee alinements which seek to avoid or minimize these impacts are being investigated as part of the detailed studies.

5. *Other Environmental Review and Consultation Requirements.* Pursuant to Executive Order (EO) 11990 and U.S. Army Corps of Engineers wetland policy, a wetland inventory of the study area has been accomplished and is providing a data base for use in plan formulation. An EO 11988 analysis of the impact of the project on the flood plain will be conducted as part of project planning. Because all alternative levee alinements involve some construction of levee segments in waters of the United States, a Section 404(b) evaluation (pursuant to the Clean Water Act of 1977) will be accomplished and included in the draft EIS. A biological assessment is being conducted for the bald eagle, a federally listed threatened species identified by the U.S. Fish and Wildlife Service as potentially existing in the project area. A cultural resources reconnaissance of the project area will be conducted and results discussed in the draft EIS.

6. *Scoping Meeting.* A scoping meeting will not be held.

7. *Availability of Draft EIS.* The draft EIS is presently scheduled to become available to the public in April 1981.

Information regarding the draft EIS can be obtained by contacting: Karen Northup, Environmental Coordinator, Environmental Resources Section, Department of the Army, Seattle District, U.S. Army Corps of Engineers, Post Office Box C-3755, Seattle, Washington 98124, Telephone (206) 764-3624 or FTS 399-3624.

Dated: June 23, 1980.

Leon K. Moraski,

Colonel, Corps of Engineers, District Engineer.

[FR Doc. 80-19959 Filed 7-2-80; 8:45 am]

BILLING CODE 3710-GB-M

DEPARTMENT OF EDUCATION

Media in Continuing Education Ad Hoc Committee Meetings

AGENCY: National Advisory Council on Extension and Continuing Education.

ACTION: Notice of Meetings.

SUMMARY: This notice sets forth the schedules and proposed agenda of a meeting of the Ad Hoc Committee on the Media in Continuing Education and of the Executive Committee of the National Advisory Council on Extension and Continuing Education. It also describes the functions of the Council. Notice of meetings is required under the Federal Advisory Committee Act (5 U.S.C. Appendix 1, 10(a)(2)). This document is intended to notify the general public of their opportunity to attend the meetings.

DATES:

August 6 and 7, 1980—Meeting of the Ad Hoc Committee on the Media in Continuing Education.

August 8, 1980—Meeting of the Executive Committee.

ADDRESS:

Media Committee: Community Service Network, University of Kentucky, Lexington, Kentucky.

Executive Committee: Campbell House Inn, 1375 Harrodsburg Road, Lexington, Kentucky.

FOR FURTHER INFORMATION:

William G. Shannon, Executive Director, National Advisory Council on Extension & Continuing Education, 425 Thirteenth Street NW., Suite 529, Washington, D.C. 20004, Telephone: 202/376-8888.

The National Advisory Council on Extension and Continuing Education is authorized under Pub. L. 89-329. The Council is required to report annually to the President, the Congress, and the Secretary of the Education Department in the preparation of general regulations and with respect to policy matters arising in the administration of Part A of Title I, (HEA), including policies and procedures governing the approval of State plans under Section 105.

Meetings of the Council are open to the public. However, because of limited space, those interested in attending the meeting of the Committee on the Media in Continuing Education or the meeting of the Executive Committee, are asked to call the Council's office beforehand.

The Media Committee will convene its meeting at the Community Service Network facilities at the University of Kentucky, Lexington, at 1:00 p.m. on Wednesday, August 6 and recess at 5:00 p.m. It will reconvene on Thursday, August 7 from 9:00 a.m. to 5:00 p.m.

The Media Committee will meet on both days with representatives of CSN to discuss public policy issues relating to the use of education communications and technology for extending educational programming to adult learners in the region and States served by CSN. Because the Thursday agenda will include site visits to various CSN facilities, those wishing to participate in the meeting should contact the Council's office in Washington, D.C. beforehand.

The Executive Committee will convene its meeting at the Campbell House Inn, 1375 Harrodsburg Road, Lexington, Ky. at 9:00 a.m. on August 8, 1980 and adjourn at 5:00 p.m. The agenda for the meeting includes discussion of the following:

a. The agenda and nature of the September meeting of the Council;

b. Budget review;

c. Annual Report outline suggestions;

d. Suggestions for 1980-81 meeting sites and schedule;

e. Legislative update; and

f. Ad Hoc committee progress review.

All records of the Council proceedings are available for public inspection at the Council's staff office, located in Suite 529, 425 Thirteenth Street, NW., Washington, D.C.

Dated: June 26, 1980.

William G. Shannon,

Executive Director.

[FR Doc. 80-19956 Filed 7-2-80; 8:45 am]

BILLING CODE 4110-02-M

DEPARTMENT OF ENERGY

[Pon De-Pn01-80CS80000]

Ocean Thermal Energy Conversion (OTEC) Pilot Plant; Program Opportunity Notice

The Department of Energy (DOE) will issue a Program Opportunity Notice (PON) on or about August 1, 1980, for one or more OTEC Pilot Plant(s). This procurement is for the design, construction, deployment and evaluation of an OTEC Pilot Plant with an aggregate net capacity of 40 MWe. The Government intends to have the Pilot Plant operating in 1985/1986.

The Procurement will consist of the following phases:

Phase I Conceptual Design
Phase II Preliminary Design
Phase III Detailed Design, Construction, Deployment and Initial Trails
Phase IV Government Operational Test and Evaluation
Phase V Private Sector Operations and Data Collection and Evaluation.

It is anticipated that multiple awards of cost-shared contracts will be made for Phase I. Firms desiring a copy of PON DE-PN01-80CS80000 must submit their requests in writing to the following address: U.S. Department of Energy, Office of Procurement Operations, Attn: Document Control Specialist, PON NO. DE-PN01-80CS80000, P.O. Box 2500, Washington, D.C. 20013.

Firms are specifically advised that telephone requests for this PON will not be honored.

Issued in Washington, D.C. June 30, 1980.

Joseph P. Cappello,

Director, Office of Procurement Operations.

[FR Doc. 80-20070 Filed 7-2-80; 8:45 am]

BILLING CODE 6450-01-M

Economic Regulatory Administration

[Docket No. ERA-FC-80-010; OFC Case No. 55368-3194-01-77]

Jones & Laughlin Steel Corp.; New Facility Classification

AGENCY: Economic Regulatory Administration.

ACTION: Notice of new facility classification, Jones & Laughlin Steel Corporation.

SUMMARY: On February 25, 1980, the Jones & Laughlin Steel Corporation (J&L) of Pittsburgh, Pennsylvania, requested that the Economic Regulatory Administration (ERA) of the Department of Energy (DOE) classify as "existing" one boiler being constructed at its Aliquippa, Pennsylvania facility pursuant to § 515.13 of the "Final Rule to Permit Classification of Certain Powerplants and Installations as Existing Facilities", (Final Rule) issued by ERA on October 19, 1979, (10 CFR Part 515), and pursuant to the provisions of the Powerplant and Industrial Fuel Use Act of 1978, 42 U.S.C. 8301 *et seq.* (FUA or the Act), which became effective on May 8, 1978. FUA imposes statutory prohibitions against the use of petroleum and natural gas by new major fuel burning installations (MFBIs). The statutory prohibitions that apply to new MFBIs do not apply to MFBIs that are classified as existing.

A notice was printed in the Federal Register on April 29, 1980 (44 FR 28416) announcing the eligibility of Jones and Laughlin to request classification for this one boiler. The publication of the notice commenced a 21 day comment period which ended on May 20, 1980.

The ERA hereby finds that Boiler No. 61 is a "new" unit and therefore subject to the prohibitions of Title II of the Act.

FOR FURTHER INFORMATION CONTACT:

Constance L. Buckley, Chief, New MFBI Branch, Office of Fuels Conversion, Economic Regulatory Administration, 2000 M Street, NW., Room 3128, Washington, D.C. 20461, Phone (202) 653-3679

Ellen Russell, Case Manager, New MFBI Branch, Office of Fuels Conversion, Economic Regulatory Administration, 2000 M Street, NW., Room 3207, Washington, D.C. 20461, Phone (202) 653-3675

James Renjilian, Office of the General Counsel, Department of Energy, 1000 Independence Avenue, SW., Room 6G-037, Washington, D.C. 20585, Phone (202) 252-2967

William L. Webb, Office of Public Information, Economic Regulatory Administration, Department of Energy, 2000 M Street, NW., Room B-110, Washington, D.C. 20461, Phone (202) 653-4055.

SUPPLEMENTAL INFORMATION: J&L, a subsidiary of the LTV Corporation of Dallas, Texas, is currently installing a 772 million Btu/hr boiler at its Blast Furnace Department, North Mills, Aliquippa Works, Aliquippa, Pennsylvania. The field-erected boiler

(No. 61) is designed to be capable of burning blast furnace gas (at a rated input capacity of 666 million Btu/hr) or coal tar (at a rated capacity of 772 million Btu/hr). The steam generated by Boiler No. 61 will be distributed throughout the plant for process steam, heating steam and to provide wind for the blast furnaces. The blast furnaces supply Boiler No. 61 with blast furnace gas which is the primary energy source used in the unit. Blast furnace gas is an "alternative fuel" as defined in § 515.20 of the Final Rule. When required, Boiler No. 61 will use coal tar as a secondary fuel. Coal tar is also an alternate fuel as defined in § 515.20(c)(3) of the Final Rule.

J&L based its request to be classified, as "existing", on (1) substantial financial penalty and (2) significant operational detriment pursuant to § 515.13(a) and (b), respectively. For the ERA to find that an installation would incur a substantial financial penalty it must be demonstrated that at least 25 percent of the total projected project cost for the facility had been expended for non-recoverable outlays by November 9, 1978. Those costs, however, associated with the construction of an alternate fuel capable facility as in this case, are deemed recoverable.

Accordingly, ERA does not agree with J&L's claim that 34.15 percent of the total projected project cost had been expended in nonrecoverable outlays, since upon completion of Boiler No. 61, J&L indicates that the unit will be capable of combusting an alternate fuel as a primary energy source.

In order to support a claim that a significant operational detriment with respect to a unit will result, cancellation, rescheduling, or modification of the construction or acquisition of the installation must be demonstrated. Without such a demonstration, ERA will not classify an eligible installation as "existing."

To support its assertion of significant operational detriment, J&L presented letters from its contractors discussing changes that would be required were the fuel for the planned unit changed from blast furnace gas to coal. J&L also asserts that the U.S. Environmental Protection Agency may require that five existing units at its Aliquippa Works permanently cease operations by December 31, 1982. Any delay in bringing Boiler No. 61 on line by that date could, therefore, have significant negative impacts on employment.

The ERA has defined "alternate fuel" at § 515.20, as any fuel other than petroleum or natural gas. This includes electricity, coal, coal derivatives, solar, biomass, and certain liquid, solid, or gaseous wastes of refinery or industrial operations. Since blast furnace gas is a gaseous waste from an industrial operation and this is deemed to be an alternate fuel, the unit is already scheduled to become an alternate fuel burning facility. In other words, the planned unit does not have to be constructed with coal capability in addition to the alternate fuel it is now scheduled to burn.

Therefore, ERA finds that J&L would not have to experience a significant operational detriment where the unit classified as a "new" installation, since it is already planned to be in compliance with the terms of FUA.

For the above reasons, as previously stated, Boiler No. 61 at J&L's Aliquippa Works is classified as a new industrial facility and is thereby subject to the prohibitions of Title II of FUA.

Issued in Washington, D.C., on June 25, 1980.

Robert L. Davies,

Assistant Administrator, Office of Fuels Conversion, Economic Regulatory Administration.

[FR Doc. 80-20069 Filed 7-2-80; 8:45 am]
BILLING CODE 6450-01-M

[ERA Docket No. 8-CERT-020]

Public Service Electric & Gas Co.; Recertification of Eligible Use of Natural Gas To Displace Fuel Oil

Public Service Electric and Gas Company (Public Service), 80 Park Plaza, Newark, New Jersey 07101, filed an application for recertification of an eligible use of natural gas to displace fuel oil in its electric generation system in New Jersey consisting of the following electric generating stations; Bergen in Ridgefield; Essex in Newark; Hudson in Jersey City; Kearny in Kearny, Linden in Linden, Sewaren in Sewaren; Edison in Edison, and Mercer in Trenton, with the Administrator of the Economic Regulatory Administration (ERA) pursuant to 10 CFR Part 595 on May 20, 1980.

On June 25, 1979, Public Service received the original one-year certification (ERA Docket No 79-CERT-020) of an eligible use of natural gas purchased from National Gas and Oil Corporation and Equitable Gas Company for use in its electric generation system. Public Service has requested that, if necessary, it be issued the recertification prior to the close of the 10-day public comment period to prevent disruption of this gas being supplied and transported under the original certification.

The ERA has carefully reviewed Public Service's application and request in accordance with 10 CFR Part 595 and the policy considerations expressed in the Final Rulemaking Regarding Procedures for Certification of the Use of Natural Gas to Displace Fuel Oil (44 FR 47920, August 16, 1979). The ERA has determined that Public Service's application satisfies the criteria enumerated in 10 CFR Part 595, and, therefore, has granted the recertification and transmitted that recertification to the Federal Energy Regulatory Commission. A copy of the transmittal letter and the actual recertification are appended to this notice.

This recertification is being issued prior to the expiration of the 10-day public comment period and being made effective on June 25, 1980 to provide continuity with the original certificate's June 24 expiration date. The recertification involves the displacement of large volumes of imported fuel oil and it is in the public interest to maximize the displacement of imported fuel. The application also indicates that the gas volumes are in "serious jeopardy of being shut-in by the suppliers after June 25, 1980 in the absence of renewed certification". It is therefore not in the public interest to disrupt unnecessarily the displacement of this imported fuel oil, especially since this same purchase and use of gas at these facilities has qualified as an "eligible use" for the past year and continually displaced significant volumes of imported fuel oil. Public comments will still be accepted by ERA for ten (10) calendar days from the date of publication of this notice in the Federal Register (until July 14, 1980) in view of the ability of the Administrator to terminate a certification for good cause 910 CFR 595.08).

An opportunity to make an oral presentation of data, views, and arguments either against or in support of this application may be requested by any interested person in writing within the ten (10) day comment period. The request should state the person's interest, and, if appropriate, why the person is a proper representative of a group or class of persons that has such an interest. The request should include a summary of the proposed oral presentation and a statement as to why an oral presentation is necessary. If ERA determines that an oral presentation is necessary, further notice will be given to Public Service and any persons filing comments and will be published in the Federal Register.

Issued in Washington, D.C., on June 24, 1980.

F. Scott Bush,

Assistant Administrator Regulations and Emergency Planning, Economic Regulatory Administration.

Department of Energy,
Washington, D.C., June 26, 1980.

Re ERA Recertification of Eligible Use, ERA Docket No. 80-CERT-020, (Recertification of ERA Docket No. 79-CERT-020) Public Service Electric and Gas Company.

Mr. Kenneth F. Plumb,
Secretary, Federal Energy Regulatory Commission, Washington, D.C.

Dear Mr. Plumb: Pursuant to the provisions of 10 CFR Part 595, I am hereby transmitting to the Commission the enclosed recertification of an eligible use of natural gas to displace fuel oil. This recertification is required by the Commission as a precondition to interstate transportation of fuel oil displacement gas in accordance with the authorizing procedures in 18 CFR Part 284, Subpart F. This gas is presently being transported pursuant to ERA's certification of eligible use in Docket No. 79-CERT-020 which expires June 24, 1980. As noted in the recertification, it is effective for one year from June 25, 1980, unless a shorter period of time is required by 18 CFR Part 284, Subpart F. A copy of the enclosed recertification is also being published in the Federal Register and provided to the applicant.

Should the Commission have any further questions, please contact Mr. Albert F. Bass, Deputy Director, Natural Gas Division, Economic Regulatory Administration, 2000 M Street, N.W., Room 7108, Washington, D.C. 20461, telephone (202) 653-3286. All correspondence and inquiries regarding this certification should reference ERA Docket No. 80-CERT-020.

Sincerely,

F. Scott Bush,

Assistant Administrator, Regulations and Emergency Planning, Economic Regulatory Administration.

Recertification by the Economic Regulatory Admininstration to the Federal Energy Regulatory Commission of the Use of Natural Gas for Fuel Oil Displacement by the Public Service Electric and Gas Co.—ERA Docket No. 80-CERT-020

Application for Recertification

Pursuant to 10 CFR Part 595, Public Service Electric and Gas Company (Public Service), filed an application for recertification of an eligible use of up to 17.5 billion cubic feet of natural gas per year for its electric generation system in New Jersey consisting of the following electric generating stations: Bergen in Ridgefield, Essex in Newark, Hudson in Jersey City, Kearny in Kearny, Linden in Linden, Sewaren in Sewaren, Edison in Edison, and Mercer in Trenton, with the Administrator of the Economic Regulatory Administration (ERA) on May 20, 1980. The application states that the eligible sellers of the gas are the National Gas and Oil Corporation (National Gas) and the Equitable Gas Company (Equitable) and the transporters are the Transcontinental Gas Pipe Line Corporation, the Texas Eastern Transmission Corporation, and the Tennessee Gas Pipeline Company. The application indicates that the use of the natural gas is estimated to displace approximately 2,643,000 barrels of No. 6 fuel oil (0.3 percent sulfur), and approximately 70,000 barrels of No. 2 fuel oil (0.2 percent sulfur) or kerosene (0.1 percent sulfur) per year. The application also indicates that neither the gas nor the displaced fuel oil will be used to displace coal in the applicant's facilities.

Recertification

Based upon a review of the information contained in the application, as well as other information available to ERA, the ERA hereby recertifies, pursuant to 10 CFR Part 595, that the use of up to 17.5 billion cubic feet of natural gas per year at Public Service's eight electric generating facilities in New Jersey purchased from National Gas and Equitable is an eligible use of gas within the meaning of 10 CFR Part 595.

Effective Date

This recertification is effective June 25, 1980, and expires one year from that date, unless a shorter period of time is required by 18 CFR Part 284, Subpart F. It is effective during this period of time for the use of up to the same certified volume of natural gas at the same facilities purchased from the same eligible sellers.

Issued in Washington, D.C., on June 24, 1980.

F. Scott Bush,

Assistant Administrator, Regulations and Emergency Planning, Economic Regulatory Administration.

[FR Doc. 80-20071 Filed 7-2-80; 8:45 am]
BILLING CODE 6450-01-M

Canadian Crude Oil Allocation Program Allocation Notice for the July 1 Through Sept. 30, 1980, Allocation Period

In accordance with the provisions of the Mandatory Canadian Crude Oil Allocation Regulations, 10 CFR Part 214, the Economic Regulatory Administration (ERA) of the Department of Energy (DOE) hereby issues the allocation notice specified in § 214.32 for the allocation period commencing July 1, 1980.

Since October 1979, exports of crude oil from Canada have been authorized on a monthly basis instead of a quarterly basis. Consequently, although this allocation notice is for the July through September 1980 quarter, the volumes listed represent only July exports from Canada. Pursuant to § 214.32(c), this quarterly notice will be revised with the publication of supplemental notices when Canada notifies the ERA of export levels for August and for September.

Redesignation of Priority Status

On April 17, 1980, the Department of Energy's Office of Hearings and Appeals (OHA) issued a Decision and Order with respect to appeals filed by the Mobil Oil Corporation from four allocation notices issued by ERA under the Canadian Crude Oil Allocation Program. *Mobil Oil Corporation*, Case Nos. DEA-0235, 0387, 0589, and BEA-0035. OHA concluded that ERA erred in not reclassifying Ashland and Koch's Minnesota refineries as second priority refineries for the fourth allocation quarter of 1978 and the second, third, and fourth allocation quarters of 1979.

It is ERA's belief that the legal and factual determinations made by OHA with respect to the Ashland and Koch refineries' access to non-Canadian crude oil in the allocation periods specified above are equally applicable to future allocation periods. Accordingly, on May 16, 1980, Ashland and Koch were formally advised that ERA intended to redesignate the Ashland refinery at St. Paul Park, Minnesota, and the Koch refinery at Pine Bend, Minnesota, second priority refineries for the June 1980 Supplemental Allocation Notice and, with the possible exception of the first allocation quarter in each year, in every subsequent allocation quarter. With respect to the first allocation quarter of each year, ERA intended to make a determination of the refineries' priority status at a later time.

However, in May 1980, the United States District Court for the District of Minnesota enjoined DOE from implementing reclassification of the Koch and Ashland refineries from first priority to second priority status pending a hearing and determination of the motion for a preliminary injunction.

In accordance with the requirements of these Temporary Restraining Orders, the Ashland and Koch refineries will remain first priority for the July 1980 Allocation Notice.

Allocation of Canadian Light Crude Oil

The Canadian National Energy Board (NEB) has formally advised ERA that the total volume of Canadian light crude oil authorized for export to the United States for the month of July 1980, and, therefore, subject to allocation under Part 214, will be 50 barrels/day (B/D), all of which is operationally constrained through the Union Oil pipeline from the Reagan field in Canada to the Flying J, Inc. (formerly ICG Vista) Thunderbird refinery (second priority) at Cut Bank, Montana. Pursuant to 10 CFR 214.35, ERA will give effect to the operational constraint regarding the Thunderbird

refinery in the issuance of Canadian crude oil rights for the month of July.

Allocation of Canadian Heavy Crude Oil

The NEB has advised ERA that the authorized export level for Canadian heavy crude oil for the month of July 1980 is 42,000 B/D. In allocating heavy crude oil for July, ERA has used the procedures set forth in § 214.31(a)(3). Due to the relatively low export level for heavy crude oil for July, only first priority refineries are entitled to heavy crude oil allocations, pursuant to the first step specified in § 214.31(a)(3).

The issuance of Canadian heavy crude oil rights, expressed in barrels/day, for July 1980 to refiners and other firms nominating for heavy crude oil for the July–September allocation period is as follows:

	Refiner/refinery	Base period volumes[1] Canadian total	Base period volumes[1] Canadian heavy crude	Nomination	Allocation
Priority:					
II	Ashland-Buffalo, NY	36,752	4,719	2,800	0
II	Ashland-Findley, OH	2,198	2,165	1,300	0
I	Ashland-St. Paul Park, MN	44,707	4,803	7,000	2,558
I	Koch-Pine Bend, MN	74,383	68,692	95,000	36,581
II	Laketon-Laketon, IN	141	131	200	0
II	Mobil-Buffalo, NY	24,995	0	6,036	0
II	Mobil-Ferndale, WA	45,444	0	10,975	0
II	Mobil-Joliet, IL	14,606	12,474	12,989	0
I	Murphy-Superior, WI	25,625	5,372	6,000	2,861
II	Union-Lemont, IL	11,711	0	20,000	0
Total Priority I					42,000
Total Priority II					0
Total Total I and II					42,000

[1] Base period volume for the purposes of this notice means average number of barrels of Canadian crude oil included in a refinery's crude oil runs to stills or consumed or otherwise utilized by a facility other than a refinery during the base period (November 1, 1974, through October 31, 1975) on a barrels per day basis. For the base period volumes of all priority refineries, see Allocation Notice issued December 29, 1979 (45 FR 1664, January 8, 1980).

On or prior to the thirtieth day preceding each allocation period, each refiner or other firm that owns or controls a first priority refinery shall file with ERA the supplemental affidavit specified in § 214.41(b) to confirm the continued validity of the statements and representations contained in the previously filed affidavit or affidavits, upon which the designation for that priority refinery is based. Each refiner or other firm owning or controlling a first or second priority refinery shall also file the periodic report specified in § 214.41(d)(1) on or prior to the thirtieth day preceding each allocation period, provided, however, that the information as to estimated nominations specified in § 214.41(d)(1)(i) is not required to be reported.

Within 30 days following the close of each three-month allocation period, each refiner or other firm that owns or controls a priority refinery shall file the periodic report specified in § 214.41(c)(2) certifying the actual volumes of Canadian crude oil and Canadian plant condensate included in the crude oil runs to stills, consumed or otherwise utilized by each such priority refinery (specifying the portion thereof that was allocated under Part 214) for the allocation period.

This notice is issued pursuant to Subpart G of ERA's regulations governing its administrative procedures and sanctions, 10 CFR Part 205. Any person aggrieved hereby may file an appeal with DOE's Office of Hearings and Appeals in accordance with Subpart H of 10 CFR Part 205. Any such appeal shall be filed on or before August 4, 1980.

Issued in Washington, D.C. on June 27, 1980.

Paul T. Burke,

Deputy Assistant Administrator, Office of Petroleum Operations, Economic Regulatory Administration.

[FR Doc. 80-19966 Filed 7-2-80; 8:45 am]

BILLING CODE 6450-01-M

Action Taken on Consent Orders

AGENCY: Economic Regulatory Administration, DOE.

ACTION: Notice of action taken on consent orders.

SUMMARY: The Economic Regulatory Administration (ERA) of the Department of Energy (DOE) hereby gives Notice that Consent Ordes were entered into between the Office of Enforcement, ERA, and the firms listed below during the month of May 1980. The Consent Orders represent resolutions of outstanding compliance investigations or proceedings by the DOE and the firms which involve a sum of less than $500,000 in the aggregate, excluding penalties and interest. These Consent Orders are concerned exclusively with payment of the refunded amounts to injured parties for alleged overcharges made by the specified companies during the time periods indicated below through direct refunds or rollbacks of prices.

For further information regarding these Consent Orders, please contact Mr. Edward F. Momorella, District Manager of Enforcement, 1421 Cherry Street, Philadelphia, Pennsylvania 19102, telephone number (215) 597-2662.

Firm name and address	Refund amount	Product	Period covered	Recipients of refund
Ditmas Oil Associates, 33-38 127 Place, Flushing, N.Y. 11368.	$11,000	Motor gasoline.	6/1/79 to 8/21/79	End-user class of purchasers.
Regional Petroleum, 25 Franklin Street, Brooklyn, N.Y. 11222.	39,770	Motor gasoline.	1/1/79 to 7/31/79	End-user class of purchasers.
Nobek Distributors, 2601 Hempstead Turnpike, East Meadow, N.Y. 11554.	15,319	Motor gasoline.	5/1/79 to 7/31/79	End-user class of purchasers.
Kings County Fuel Oil Transportation Corp./Energy Distributors, 72 Huntington Street, Brooklyn, N.Y. 11231.	11,000	Motor gasoline.	5/1/79 to 7/31/79	End-user class of purchasers.
Berks Fuel Storage Co., 4025 Pottsville Pike, Reading, Pa. 19603.	104,425	No. 2 Oil	11/1/73 to 2/28/76.	Identifiable customers.
Reading Merchants Oil Co., 34 South 4th Street, Reading, Pa 19602.	80,000	No. 2 Oil	11/1/73 to 2/28/76.	Identifiable customers.

Issued in Philadelphia on the 18th day of June 1980.

Edward F. Momorella,

District Manager of Enforcement, Northeast District.

[FR Doc. 80-19967 Filed 7-2-80; 8:45 am]

BILLING CODE 6450-01-M

Office of Energy Research

Conservation R. & D. Subpanel of the Energy Research Advisory Board; Open Meeting

Notice is hereby given of the following meeting:

Name: Conservation R&D Subpanel of the Energy Research Advisory Board (ERAB). ERAB is a Committee constituted under the Federal Advisory Committee Act (Pub. L. 92-463, 86 Stat. 770).

Date and time: July 10-11, 1980—9 a.m. to 4 p.m.

Place: Department of Energy, Forrestal Building, Room 6E-069, 1000 Independence Avenue, SW., Washington, D.C. 20585.

Contact: Eudora M. Taylor, Staff Assistant, Energy Research Advisory Board, Department of Energy, Forrestal Building—MS 3F-032, 1000 Independence Avenue, SW., Washington, D.C. 20585, Telephone: 202/252-8933.

Purpose of the Parent Board: To advise the Department of Energy on the overall research and development conducted in DOE and to provide long-range guidance in these areas to the Department.

Tentative Agenda: Review of DOE documents on the technology base component of DOE's Conservation R&D programs.

Initial discussions on Conservation Subpanel input into ERAB Technology Base Report.

Public Participation: The meeting is open to the public. Written statements may be filed with the Subpanel either before or after the meeting. Members of the public who wish to make oral statements pertaining to agenda items should contact the Energy Research Advisory Board at the address or telephone number listed above. Requests must be received prior to the meeting and reasonable provision will be made to include the presentation on the agenda. The Chairperson of the Subpanel is empowered to conduct the meeting in a fashion that will facilitate the orderly conduct of business.

Transcripts: Available for public review and copying at the Freedom of Information Public Reading Room, 5B-180, Forrestal Building, 1000 Independence Avenue, SW., Washington, D.C., between 8 a.m. and 4 p.m. Monday through Friday, except Federal Holidays.

Issued at Washington, D.C., on June 23, 1980.

Edward A. Frieman,

Director of Energy Research.

[FR Doc. 80-19969 Filed 7-2-80; 8:45 am]

BILLING CODE 6450-01-M

Office of the Secretary

Interagency Geothermal Coordinating Council, Environmental Controls Panel; Meetings

Notice is hereby given of the following meetings:

Name: Environmental Controls Panel of the Interagency Geothermal Coordinating Council (IGCC). IGCC is a Council constituted in accordance with the provisions and intent of Public Law 93-410, the Geothermal Energy Research, Development and Demonstration Act of 1974 and Pub. L. 95-238, the Department of Energy Act of 1978.

Date and time: July 8, 1980—9:30 a.m. to 5 p.m.

Place: Denver Hilton Inn, I-70 and Peoria Street, Denver, Colorado 80239, (303) 373-5730.

Date and time: July 9, 1980—9:30 a.m. to 5 p.m.

Place: Airport Marina Hotel, 1380 Old Bayshore Highway, Burlingame, California 94010, (415) 347-5444.

Contact: Dave Anderson, Geothermal Resources Concil, P.O. Box 98, Davis, California 95616, (916) 758-2350.

Purpose of the parent council: Coordinate those Federal plans, activities and policies which are related to, or impact on, geothermal energy, including ancillary activities of agencies not represented in the Council membership. The Council may make the recommendations to the appropriate agencies and the President with regard to alternative policies or actions considered necessary or desirable to expedite the development and utilization of geothermal energy resources.

Agenda: These meetings are to discuss environmental control research pertinent to geothermal energy with industry and other interested parties.

Public participation: These meetings are open to the public. Written statements may be filed with the Panel either before or after the meetings. Members of the public who wish to make oral statement should contact the Panel through Dave Anderson at the above address. The Chairman of the Panel is empowered to conduct the meetings in a fashion that will facilitate the orderly conduct of business.

Transcripts: No transcripts of these meetings will be made.

Issued at Washington, D.C., on June 27, 1980.

R. D. Langenkamp,

Acting Assistant Secretary for Resource Applications.

[FR Doc. 80-19968 Filed 7-1-80; 8:45 am]

BILLING CODE 6450-01-M

Southeastern Power Administration

Proposed Power Marketing Policy Kerr-Philpott System of Projects

AGENCY: Department of Energy, Southeastern Power Administration, (SEPA).

ACTION: Notice of proposed power marketing policy for Kerr-Philpott system of projects.

SUMMARY: SEPA has developed the following proposed power marketing policy for its Kerr-Philpott System of Projects pursuant to Notice published in the Federal Register of October 31, 1979, 44 F.R. 62599, and in accordance with Procedure for Public Participation in the Formulation of Marketing Policy published July 6, 1978, 43 F.R. 29186. The policy, when finalized, will constitute written guidelines for future disposition of power from the system. The policy is developed under authority of Section 5 of the Flood Control Act of 1944, 16 U.S.C. 825s, and Section 302(a) of the Department of Energy Organization Act of 1977, 43 U.S.C. 7152. Interested persons are invited to submit written comments directly to SEPA and/or present written or oral views, data or arguments at the public comment forum on the proposed policy.

DATES: Written comments are due on or before December 19, 1980. A public comment forum will be held in South Hill, Virginia, on November 18, 1980.

ADDRESSES: Five copies of written comments should be submitted to: Administrator, Southeastern Power Aministration, Department of Energy, Samuel Elbert Building, Elberton, Georgia 30635. The public comment forum will begin at 10:00 a.m. on the following date and at the following location: November 18, 1980, Holiday Inn, Atlantic Street, South Hill, Virginia 23970.

FOR FURTHER INFORMATION CONTACT: Mr. Harry F. Wright, Administrator, Southeastern Power Administration, Department of Energy, Samuel Elbert Building, Elberton, Georgia 30635, 404-283-3261.

SUPPLEMENTARY INFORMATION: SEPA received four responses to its solicitation for proposals and recommendations contained in its October 31, 1979, Notice of Intent to Formulate Power Marketing Policy. These responses were carefully considered as were facts fathered from those who consulted with SEPA. Major issues raised by the proposed policy are determination of marketing area, allocation of power among area customers including capacity without energy, utilization of area utility systems for power integration, firming, wheeling, exchange and other essential relationships, wholesale rates, handling of resale relationships, and conservation measures. The following identifiable studies were used in the development of the proposed marketing policy:

Power Marketing Policy Considerations, October 1977.

Preference agency loads in the Kerr-Philpott System and in adjacent areas.

Capacity and energy sales by customer groups and by utility areas for Kerr-Philpott System.

Computer-printout of simulated project operations of Kerr-Philpott System, June 1980.

Kerr-Philpott System rate and repayment study, March 1980. These studies are available for inspection or copying at the headquarters offices of Southeastern Power Administration in accordance with the Freedom of Information Act, 5 U.S.C. 552.

Additionally, an Environmental Assessment has been drafted indicating that the proposed power marketing policy will not have a significant effect upon the quality of the human environment. Comments upon this draft EA are invited through December 19, 1980. A copy may be obtained by contacting the Administrator at the address and telephone number listed above. The public comment forum will not be adjudicative in nature. The Administrator shall act as or appoint a forum chairman. At the start of the forum the chairman shall briefly explain procedures and rules. Customers and the public shall be allowed to make oral statements and comments, introduce relevant documents, and ask questions regarding the proposed power marketing policy of SEPA representatives at the forum. Persons desiring to speak shall so notify SEPA at least 3 days before the forum is scheduled so that a list of forum participants can be prepared. If necessary, the chairman may establish time limitations for oral presentations by these participants to assure that all who register to speak shall have an opportunity to do so. Others will be permitted to speak if time allows. Those unable to speak because of time limitations and others who so desire may submit written comments. The chairman and SEPA representatives may question forum participants and, the chairman, at his discretion, may permit other participants a like privilege. Questions not answered by SEPA representatives during a forum shall be specifically identified by the chairman in the transcript and shall be subsequently responded to by SEPA in writing. All documents introduced and written answers to questions shall be available for inspection and copying at SEPA headquarters in accordance with the Freedom of Information Act. Forum proceedings shall be transcribed. Copies of the transcript may be purchased from the reporter.

Customers and the public may consult or file written comments and questions with SEPA regarding the proposed marketing policy on or before December 19, 1980. All such questions shall receive expeditious response, and all such comments, questions and answers shall be available at SEPA headquarters for inspection or copying in accordance with the Freedom of Information Act. The Forum transcript will likewise be available for inspection at SEPA headquarters in Elberton, Georgia.

Issued at Elberton, Georgia, June 20, 1980.

Harry F. Wright,

Administrator.

Proposed Power Marketing Policy

Kerr-Philpott System of Projects

General. The projects and power subject to this policy are:

Capacity Projects	(kw) (nameplate)	Energy (mwh) (average annual)
John H. Kerr	204,000	432,000
Philpott	14,000	25,000

The policy for the Kerr-Philpott System of Projects will be implemented as existing contracts, or necessary extensions thereof, expire. Existing contracts involving the disposition of power in the Virginia Electric and Power Company Service Area (VEPCO) and in the Carolina Power & Light Company Service Area (CP&L) will expire June 30, 1981.

The policy will be implemented through negotiated contracts for terms not to exceed 10 years.

Transmission facilities owned by VEPCO and CP&L will be used for all necessary purposes including transmitting power to load centers. Deliveries may be made at the projects, at utility interconnections or at customer substations, as determined by SEPA. The projects will be hydraulically, electrically and financially integrated and will be operated to make maximum contribution to the respective utility areas. Preference in the sale of power shall be given to public bodies and cooperatives.

Marketing Area. The marketing area shall be the area within which power is presently marketed. It is that area within the VEPCO service area in both Virginia and North Carolina within a radius of 150 miles of the Kerr Project and that area within the CP&L service area in North Carolina and South Carolina within a radius of 165 miles of a point on the Virginia-North Carolina state line where CP&L's Kerr Dam-Henderson line interconnects with the VEPCO System. The combined service area of approximately 56,000 square miles contain 85 eligible public bodies and cooperatives, as listed in Appendix A attached hereto.

Allocations of Power. The output of the Philpott Project and approximately two-thirds of the output of the Kerr Project will be allocated on a long-term basis to customers located in the SEPA served portion of the VEPCO service area and the remainder of the output of the Kerr Project will be allocated on a long-term basis to customers located in the SEPA served portion of the CP&L service area, the same as under existing policy. Except where duplication of allocation would result, each public body and cooperative within the marketing area as shown on Appendix A will be entitled to an allocation of power as hereinafter provided.

Existing preference customers within the marketing area will be entitled to retain their allocations of project capacity and energy. It is SEPA's goal to allocate all available and usable system power to preference customers including capacity without energy which is presently being sold to VEPCO and CP&L.

New preference customers located within the respective utility areas will be entitled to share equitably with existing customers in capacity without energy, now sold the respective Companies, provided reasonable and economically appropriate arrangements can be made with the Companies to account for the sale of such capacity to the preference customers.

Allocations of capacity without energy to a particular preference customer within a particular utility service area will be based on the relationship of such customer's maximum demand to the sum of the maximum demands of all preference customers in a given utility service area sharing in such power.

Utilization of Utility Systems. In the absence of transmission facilities of its own, SEPA will use area generation and transmission systems to integrate the Governments's projects, provide firming, wheeling, exchange and backup service and such other functions as may be necessary to dispose of system power under reasonable and acceptable marketing arrangements. Utility systems providing such services shall be entitled to adequate compensation. Specific terms and conditions of such arrangements shall be the subject of negotiations between SEPA and the generation and transmission utilities providing the services. Individual preferred agencies directly affected by the negotiations shall stand in an advisory role to SEPA and shall be kept currently advised as to the status and progress of negotiations.

Wholesale Rates. Rate schedules shall be drawn so as to recover all costs associated with producing and transmitting the power in accordance with then current repayment criteria. Production costs will be determined on a system basis and rate schedules will be related to the integrated output of the projects. Rate schedules may be revised periodically.

Resale Rates. Resale rate provisions requiring the benefits of SEPA power to be passed on to the ultimate consumer will be included in each SEPA customer contract which provides for SEPA to supply more than 25 percent of the customers total power requirements during the term of the contract.

Conservation Measures. Each customer purchasing SEPA power shall agree to finance and take reasonable measures to encourage the conservation of energy by ultimate consumers.

Appendix A—Preference Agencies in the Kerr-Philpoft System Area

Preference agencies served by CP&L

North Carolina

Brunswick EMC	Pee Dee EMC
Carteret-Craven EMC	Piedmont EMC
Central EMC	Pitt & Greene EMC
Four County EMC	Randolph EMC
Halifax EMC	South River EMC
Harker's Island EMC	Tideland EMC

Jones-Onslow EMC	Tri-County EMC
Lumber River EMC	Wake EMC
Apex	Louisburg
Benson	Lumberton
Clayton	New Bern
Farmville	Pikeville
Fayetteville	Red Springs
Fremont	Rocky Mount
Hookerton	Selma
Kinston	Smithfield
LaGrange	Wake Forest
Laurinburg	Wilson

South Carolina

Bennettsville

Preference agencies served by VEPCO

North Carolina

Albermarle EMC	Roanoke EMC
Edgecombe-Martin County EMC	Tideland EMC
Halifax EMC	
Belhaven	Hobgood
Edenton	Robersonville
Elizabeth City	Scotland Neck
Enfield	Tarboro
Greenville	Washington
Hamilton	Windsor
Hertford	

Virginia

B-A-R-C EC	Prince George EC
Central Virginia EC	Prince William EC
Community EC	Rappahanock EC
Craig-Botetourt EC	Shenandoah Valley EC
Mecklenburg EC	Southside EC
Northern Neck EC	
Blackstone	Harrisonburg
Culpeper	Iron Gate
Elkton	Wakefield
Franklin	

Preference agencies served by utilities other than CP&L or VEPCO

City	*Served by*
Ayden [1]	Greenville
Black Creek	Wilson
Fountain	Wilson
Lucama	Wilson
Macclesfield	Wilson
Oak City	Edgecombe-Martin County EMC
Pinetops	Wilson
Princeville	Tarboro
Sharpsburg	Rocky Mt.
Stantonsburg	Wilson
Walstonburg	Wilson
Winterville	Greenville

[FR Doc. 80-20068 Filed 7-2-80; 8:45 am]

BILLING CODE 6450-01-M

ENVIRONMENTAL PROTECTION AGENCY

[FRL 1530-6]

Agency Comments on Environmental Impact Statements and Other Actions Impacting the Environment

Pursuant to the requirements of the section 102(2)(C) of the National Environmental Policy Act of 1969, and section 309 of the Clean Air Act, as amended, the Environmental Protection Agency (EPA) has reviewed and commented in writing on Federal agency actions impacting the environment contained in the following appendices during the period of July 1, 1979 and July 31, 1979.

Appendix I contains a listing of draft environmental impact statements reviewed and commented upon in writing during this review period. The list includes the Federal agency responsible for the statement; the number and title of the statement, the classification of the nature of EPA's comments as defined in Appendix II, and the EPA source for copies of the comments as set forth in Appendix VI.

Appendix II contains the definitions of the classifications of EPA's comments on the draft environmental impact statements as set forth in Appendix I.

Appendix III contains a listing of final environmental impact statements reviewed and commented upon in writing during this review period. The listing includes the Federal agency responsible for the statement, the number and title of the EPA source for copies of the comments as set forth in Appendix VI.

Appendix IV contains a listing of final environmental impact statements reviewed but not commented upon by EPA during this review period. The listing includes the Federal agency responsible for the statement, the number and title of the statement, a summary of the nature of EPA's comments, and the EPA source for copies of the comments as set forth in Appendix VI.

Appendix V contains a listing of proposed Federal agency regulations, legislation proposed by Federal agencies, and any other proposed actions reviewed and commented upon in writing pursuant to section 309(a) of the Clean Air Act, as amended, during the referenced reviewing period. This listing includes the Federal agency responsible for the proposed action, the title of the action, a summary of the nature of EPA's comments, and the source for copies of the comments as set forth in the Appendix VI.

Appendix VI contains a listing of the names and addresses of the sources of EPA reviews and comments listing in Appendices I, III, IV, and V.

Note that this is a 1979 report; the backlog of reports should be eliminated over the next three months.

Copies of the EPA Manual setting forth the policies and procedures for EPA's review of agency actions may be obtained by writing the Public Information Reference Unit, Environmental Protection Agency, Room 2922, Waterside Mall SW, Washington, D.C. 20460, telephone 202/755-2808.

Copies of the draft and final environmental impact statements referenced herein are available from the originating Federal department or agency.

Dated: June 26, 1980.

William N. Hedeman, Jr.,

Director, Office of Environmental Review.

Appendix I.—*Draft Environmental Impact Statements for Which Comments Were Issued Between July 1, and July 31, 1979*

Identifying No.	Title	General nature of comments	Source for copies of comments
	CORPS OF ENGINEERS		
DS-COE-A36215-OK	Section 404 Evaluation, Shidler Lake, Salt Creek, Osage County, Oklahoma	ER2	G
DS-COE-C32010-VI	Channel Improvement for Crown Bay Channel, Charlotte Amalie Harbor, St. Thomas Island, Virgin Islands.	ER2	C
DS-DOE-E30011-FL	Santa Rosa Island, Beach Erosion Control, Pensacola Beach, Florida	ER2	E
DS-COE-E30012-SC	Folly Beach, Erosion and Hurricane Protection, Charleston County, South Carolina	ER2	E
DS-COE-E34014-OO	Operation and Maintenance, Walter F. George Lock, Dam and Lake, Alabama and Georgia	LO2	E
DS-COE-G36074-TX	Boggy Creek Flood Control, Colorado River, Austin, Travis County, Texas	LO1	G
DS-COE-H07005-IA	Louisa Generating Station, Permit, Louisa and Muscatine Counties, Iowa	ER3	H
	DEPARTMENT OF AGRICULTURE		
DS-AFS-K61033-CA	Tuolumne River, Wild and Scenic River Study, Tuolumne County, California	LO1	J
DS-REA-E07006-FL	Seminole Plant Units No. 1 and 2, Transmission, Putman County, Florida	LO2	E
DS-REA-H08002-MO	New Madrid to Blytheville 500 KV Transmission Facilities, Associated Electric Cooperative, New Madrid County, Missouri.	LO1	H
DS-SCS-D36030-PA	Middle Creek Watershed Plan, Snyder, Mifflin and Union Counties, Pennsylvania	LO2	D
DS-SCS-L36066-ID	Brundage Watershed Project, Reservior Enlargement, Adams County, Idaho (USDA-SCS-EIS-WS-(ADM)-79-1(D)-ID).	LO2	K

Appendix I.—*Draft Environmental Impact Statements for Which Comments Were Issued Between July 1, and July 31, 1979*—Continued

Identifying No.	Title	General nature of comments	Source for copies of comments
	DEPARTMENT OF COMMERCE		
D-EDA-F39009-IN	Title IX Grant, Riverfront Commercial Development, Jeffersonville, Clark County, Indiana	ER2	F
	DEPARTMENT OF DEFENSE		
D-JCS-E10004-FL	Joint Readiness Exercise "Bold Eagle 80", Eglin Air Force Base, Test Range Complex, Florida	ER2	E
D-USA-K11015-HI	Army Installation; US Army Support Command, Hawaii	LO1	J
D-USA-K11016-HI	Tripler Medical Center, Addition and Alteration, Oahu, Hawaii	LO1	J
	Department of the Interior		
D-BIA-K60008-AZ	Recreational Lease and Conveyance of Wildhorse Reservoir, Lands to the Shoshone-Paiute Indian Tribes of Duck Valley, Arizona.	LO1	J
DS-BLM-A02106-OO	Proposed 1979 Outer Continental Shelf Oil and Gas Lease Sale #42, Offshore North Atlantic, Georges Banks.	ER1	A
D-BLM-K65032-NV	Domestic Livestock Grazing Area, Caliente Area, Nevada	LO1	J
D-BLM-L60003-ID	Southwest Idaho Agriculture Development, Elmore, Twin Falls and Owyhee Counties, Idaho	ER1	K
D-BLM-L65048-OR	Jackson and Klamath Sustained Yield Units, Ten-Year Timber Management Plan, Oregon	ER2	K
D-NPS-L64006-OO	Snake River Wild and Scenic River Study, Washington, Idaho and Oregon	LO1	K
	DEPARTMENT OF TRANSPORTATION		
D-FHW-B40037-OO	I-895 and Jamestown Bridge Replacement, North Kingstown and Jamestown, Washington County, Rhode Island and Bristol County, Massachusetts (FHWA-RI/MA-EIS-79-01-D).	ER2	B
D-FHW-D40072-VA	VA-234 Bypass, Manassas, Prince William County, Virginia	LO2	D
D-FHW-E40174-SC	Mary Clark Expressway, Construction, Berkeley and Charleston Counties, South Carolina	LO2	E
D-FHW-F40129-MN	Trunk Highway 120, I-494 in Woodbury to I-694, in Oakdale, Washington and Ramsey Counties, Minnesota.	ER2	F
D-FHW-F40130-MN	Trunk Highway 10, Hanson Boulevard, Coon Rapids in Mounds View, Anoka and Ramsey Counties, Minnesota.	ER2	F
D-FHW-F40131-MI	MI-32, MI-33 East to the Alpena County Line Montgomery County, Michigan	ER2	F
D-FHW-K40068-CA	CA-15, Norco Reach, Magnolia Avenue to CA-60, Riverside and San Bernardino Counties, California.	ER2	J
D-FHW-K40069-CA	Extension of Tidelands Avenue and East Street, City of Chula Vista, California	ER2	J
D-FHW-L40083-OR	S.W. Murray Boulevard, S.W. Alice Lane to Allen Boulevard, Beaverton City, Washington County, Oregon (FHWA-OR-EIS-79-06D).	LO1	K
	GENERAL SERVICES ADMINISTRATION		
D-GSA-E81017-FL	Portions of Harry S. Truman Annex and Trumbo Point Annex of Key West Naval Air Station and Former Coast Guard Station, Key West, Florida.	LO1	E
	DEPARTMENT OF HOUSING AND URBAN DEVELOPMENT		
D-HUD-D89023-PA	Gallery II of Market Street East (CDBG), Philadelphia, Pennsylvania	LO2	D
D-HUD-E85045-FL	Argyle Forest New Town, Jacksonville, Duval and Clay Counties, Florida	ER2	E
D-HUD-E85046-AL	Alexander City, High Service Transmission Main, Alabama (CDBG) (HUD-B-78-HN-01—0001)	LO2	E
D-HUD-F85048-IL	Treehouse Development, Schaumburg, Cook County, Illinois	ER2	F
D-HUD-F85049-IN	Sunblest Subdivision, Noblesville, Hamilton County, Indiana	ER2	F
D-HUD-G85139-TX	Imperial Oaks Subdivision, Montgomery County, Texas	ER2	G
	DEPARTMENT OF JUSTICE		
DS-JUS-K81008-AZ	Federal Detention Center, Tuscon, Arizona	LO1	J
	NEW ENGLAND RIVER BASIN COMMISSION		
D-NRB-C36027-NY	Basin Study and Plan, Level B, Lake Champlain, New York and Vermont	LO1	C
	NUCLEAR REGULATORY COMMISSION		
D-NRC-K06003-AZ	Palo Verde Nuclear Generating Station, Units 4 and 5, Arizona Public Service Company, Arizona	ER2	J
	DEPARTMENT OF STATE		
D-STA-A91042-OO	Convention on the Conservation of Migratory Species of Wild Animals	LO1	A
	VETERANS ADMINISTRATION		
D-VAD-L80003-OR	600-bed Replacement Hospital, VA Medical Center, Portland, Oregon	ER2	K

Appendix II.—Definitions of Codes for the General Nature of EPA Comments

Environmental Impact of the Action

LO—Lack of Objection. EPA has no objections to the proposed action as described in the draft impact statement; or suggests only minor changes in the proposed action. ER—Environmental Reservations EPA has reservations concerning the environmental effects of certain aspects of the proposed action. EPA believes that further study of suggested

alternatives or modifications is required and has asked the originating Federal agency to reassess these impacts.

EU—Environmentally Unsatisfactory

EPA believes that the proposed action is unsatisfactory because of its potentially harmful effect on the environment. Furthermore, the Agency believes that the potential safeguards which might be utilized may not adequately protect the environment from hazards arising from this action. The Agency recommends that alternatives to the action be analyzed further (including the possibility of no action at all).

Adequacy of the Impact Statement

Category 1—Adequate

The draft impact statement adequately sets forth the environmental impact of the proposed project or action as well as alternatives reasonably available to the project or action.

Category 2—Insufficient Information

EPA believes that the draft impact statement does not contain sufficient information to assess fully the environmental impact of the proposed project or action. However, from the information submitted, the Agency is able to make a preliminary determination of the impact on the environment. EPA has requested that the originator provide the information that was not included in the draft statement.

Category 3—Inadequate.

EPA believes that the draft impact statement does not adequately assess the environmental impact of the proposed project or action, or that the statement inadequately analyzes reasonable available alternatives. The Agency has requested more information and analysis concerning the potential environmental hazards and has asked that substantial revision be made to the impact statement.

Appendix III.—*Final Environmental Impact Statements for Which Comments Were Issued Between July 1, and July 31, 1979*

Identifying No.	Title	General nature of comments	Source for copies of comments
		CORPS OF ENGINEERS	
F-COE-D32008-VA	Jarvis Creek Navigation Project, Northumberland County, Virginia.	EPA's concerns were adequately addressed in the final EIS.	D
F-COE-E34012-OO	Hartwell Lake, Fifth Unit, Savannah River, Georgia and South Carolina.	Generally, EPA's concerns were adequately addressed in the final EIS.	E
F-COE-F09002-IL	Peabody Coal Company, Pit #3, New Athens, St. Clair County, Illinois.	EPA has serious environmental reservations regarding the proposed action and has urged that the COE not issue the permit. Specifically, EPA believes there are alternatives available which would avoid significant adverse impacts to the wetland areas and the habitat.	F
F-COE-F32055-OH	West Harbor, Recreational Navigation Improvements, Ottawa County, Ohio.	EPA's concerns were adequately addressed in the final EIS.	F
F-COE-F36057-OH	Local Flood Protection, Clear Creek, Franklin, Warren County, Ohio.	EPA's concerns were adequately addressed in the final EIS. EPA requested the COE reconsider the environmentally preferable plan of the 150 year bypass channel which could achieve the desired level of flood control.	F
FS-COE-G32018-TX	Corpus Christi Ship Channel, Maintenance Dredging, Texas.	EPA's concerns were adequately addressed in the final supplement.	G
F-COE-L05005-AK	Hydroelectric Power Development, Upper Susitna River Basin, Alaska.	EPA believes this FEIS is only considered sufficient to request funds for phase I—advanced engineering and design. EPA believes the FEIS is unresponsive to the agencies concerns and additional studies and a supplemental EIS will be required to supply the information needed for the public to make an informed judgment on the environmental impacts of this project.	K
		DEPARTMENT OF COMMERCE	
F-NOA-K86005-GU	Guam Coastal Zone Management Program (CZM)	EPA's concerns were adequately addressed in the final EIS.	J
		DEPARTMENT OF DEFENSE	
F-UAF-A10051-MA	Operation of the Pave Paws Radar System, Otis Air Force Base, Massachusetts.	EPA's concerns were adequately addressed in the final EIS.	A
		DEPARTMENT OF THE INTERIOR	
F-BLM-A02137-OO	Proposed 1979 Outer Continental Shelf Oil and Gas Lease Sale #58A (OCS), Western and Central Gulf of Mexico.	Generally, EPA's concerns were adequately addressed in the final EIS. However, EPA remains deeply concerned with the potential impacts associated with the offering of the two tracts on the flower garden banks. EPA strongly believes that in anticipation of the marine sanctuary designation and its protective intent, these tracts should be withdrawn from lease sale. Additionally, EPA maintains its position of extreme concern regarding the six tracts in water depths exceeding 300 meters with the possible use of unregulated technology.	A
F-BLM-J01010-CO	West-Central Colorado Coal, Resources Development, Colorado.	EPA commented in the DEIS that BLM was preparing EIS's on mine plans that are not responsive to current SMRCA regulatory requirements. The FEIS failed to resolve some of these major policy issues. We presume that these issues will be addressed in the forthcoming land use plans and EIS's.	I
F-IBR-J32001-CO	Paradox Valley Unit, Colorado River Basin Salinity Control Project.	EPA strongly supports WPRS's efforts to reduce the salt load in the Colorado River Basin. However, EPA feels that WPRS should consider both an "Optimization" of cost per unit salt reduction as well as "Total" salt removal.	I
F-SFW-D64000-WV	Canaan Valley National Wildlife Refuge, West Virginia.	EPA's concerns were adequately addressed in the final EIS.	D
		DEPARTMENT OF TRANSPORTATION	
F-FHW-A42026-NB	US 73/US 75 Improvement, Omaha-Nebraska City Expressway, Otoe, Cass, Sarpy and Douglas Counties, Nebraska (FHWA-NEB-EIS-73-11-F).	EPA has environmental reservations due to the significant noise level increases in the realignment areas of the project. The final statement fails to identify noise sensitive receptors in the realignment areas or to provide for noise abatement measures feasible for those receptors which might be impacted by the proposed project. EPA feels that the noise report is a necessary step in both the environmental review process and the development of the project.	H

Appendix III.—*Final Environmental Impact Statements for Which Comments Were Issued Between July 1, and July 31, 1979*—Continued

Identifying No.	Title	General nature of comments	Source for copies of comments
F-FHW-D40005-PA	LR 1036, Section A00, Relocated US 15, US 220 to PA-14, Lycoming County, Pennsylvania.	Generally, EPA's concerns were adequately addressed in final EIS.	D
F-FHW-D40059-MD	US 50, Improvements, East to Old Bradley Road, Vienna, Dorchester and Wicomico Counties, Maryland.	EPA's concerns were adequately addressed in the final EIS. EPA made recommendation to mitigate noise impacts both for present and future population levels.	D
F-FHW-F40061-IL	Four Lane Freeway, IL-412, I-55 in McLean County, to I-80, LaSalle County, Illinois.	EPA's concerns were adequately addressed in the final EIS.	F
F-FHW-F40102-IL	FAP Route 789, IL-143, IL-3 to FAP 770, Madison County, Illinois.	Generally, EPA's concerns were adequately addressed in the final EIS. The FEIS recognizes the severity of the potential noise impacts and will defer identification of mitigating measures until release of the final noise report. EPA requested a copy of the report for review and comment.	F
	DEPARTMENT OF HOUSING AND URBAN DEVELOPMENT		
F-HUD-F85042-OH	Herbert C. Huber Plat Nos. 58, 59, 60, 62 in Wayne Township, Montgomery County, Ohio.	EPA's concerns were adequately addressed in the final EIS.	F
F-HUD-F85047-MN	Canterbury Square Development, Savage, Scott County, Minnesota.	EPA's concerns were adequately addressed in the final EIS.	F
F-HUD-K32013-CA	Port/Marina Project, Richmond Redevelopment Agency, Contra Costa County, California.	EPA's concerns were adequately addressed in the final EIS.	J
	DEPARTMENT OF AGRICULTURE		
F-AFS-D65007-OO	Timber Management Plan, Jefferson National Forest, Virginia and Kentucky.	EPA's concerns were adequately addressed in the final EIS.	D
F-AFS-F65002-MI	Timber Resource Plan, Hiawatha National Forest, Chippewa, Mackinac, Alger, Schoolcraft and Delta Counties, Michigan.	EPA's concerns were adequately addressed in the final EIS.	F
RF-SCS-D36027-WV	Upper Mud River Watershed, Lincoln and Boone Counties, West Virginia.	EPA's concerns were adequately addressed in the final EIS.	D
F-SCS-L36058-WA	East Side Green River Watershed Project, King County, Washington (USDA-SCS-ES-WS-(ADM)).	EPA has reviewed the East Side Green River Watershed Project in King County, Washington. EPA feels that public circulation, review and inclusion of subsequent comments concerning a new alternative currently being analyzed is needed before the final EIS can be considered complete. Specifically, a decision based on the FEIS is premature until a detailed supplemental analysis of a new proposed detention alternative, using the existing Spring Brook Creek Channel in comparison with the proposed action is provided. This supplement is needed as part of the NEPA process before a final decision can be made by the SCS. EPA suggests the SCS delay the in decision, and prepare a supplement.	K

Appendix IV.—*Final Environmental Impact Statements Which Were Reviewed and Not Commented on Between July 1 and July 31, 1979*

Identifying No.	Title	Source of review
	CORPS OF ENGINEERS	
F-COE-L39012-WA	Bellingham Harbor Navigation Project, Operation and Maintenance, Whatcom County, Washington	K
	DEPARTMENT OF AGRICULTURE	
F-AFS-J65080-WY	Bridger Teton National Forest, Timber Management Plan, Wyoming	I
F-AFS-J65081-MT	Island Planning Unit, Land Management Plan, Flathead National Forest, Montana	I
F-AFS-J65086-MT	Ashland Planning Unit, Land Management Plan, Custer National Forest, Montana	I
F-AFS-L61099-OR	Elgin Planning Unit, Land Management Plan, Umatilla and Wallowa-Whitman National Forests, Union and Wallowa Counties, Oregon (USDA-FS-R6-FES (ADM) (78-2)).	K
F-AFS-L61127-OR	Malheur National Forest, Ten-Year Timber Resource Plan, Grant, Harney, Baker, and Malheur Counties, Oregon (06-04-78-16)	K
	DEPARTMENT OF COMMERCE	
FS-NOA-B91011-OO	Fishery Management Plan, Atlantic Groundfish Fishery (FS-3)	B
	DEPARTMENT OF THE INTERIOR	
F-HCR-L61109-OO	Owyhee River, National Wild and Scenic River Study, Idaho and Oregon	K
	DEPARTMENT OF TRANSPORTATION	
FS-FHW-A42064-NH	I-393, Formerly US 4, US 202 and NH-9, Fort Eddy Road, Concord, Merrimack County, New Hampshire (FHWA-NH-EIS-01-FS)	B
F-FHW-B40019-NH	I-93, Franconia Notch and Alternate Routes, Grafton County, New Hampshire (FHWA-NH-EIS-76-02-F)	B
F-FHW-L40079-OR	Going Street Noise Mitigation Project, Portland, Multnomah County, Oregon	K
	DEPARTMENT OF HOUSING AND URBAN DEVELOPMENT	
F-HUD-J85021-WY	Sage Bluffs Residential Development, Gillete, Campbell County, Wyoming	I

Appendix V.—*Regulations, Legislation and Other Federal Agency Actions for Which Comments Were Issued Between July 1 and July 31, 1979*

Identifying No.	Title	General nature of comments	Source for copies of comments
		DEPARTMENT OF AGRICULTURE	
A-APH-A86140-OO	Implementation of NEPA Procedures, Invitation to the Public to Comment on a Draft of the APHIS Supplemental NEPA Procedure-Notice (44 FR 33127).	EPA feels that the procedures should include more details on how alternatives are to be developed during the NEPA process, and how those alternatives are to be explicitly considered in the agency decision process as required by 40 CFR 1505.1.	A
R-REA-A86137-OO	7 CFR Part 1701, Environmental Policies and Procedures, Proposed REA Bulletin (44 FR 28383).	EPA believes that REA should adjust the criteria and thresholds used to determine whether an EIS or an EA will be required, so that the REA will have as much control as possible over the environmental impacts of the projects that it helps to finance. EPA recommends that the regulations include a mitigation policy, monitoring procedures and a section pertaining to the filing requirements of EIS's. EPA also recommends that EIS's consider alternative sources of Energy.	A
		DEPARTMENT OF DEFENSE	
A-USA-K11011-CA	National Training Center, Fort Irwin Site, California	EPA has no comment to offer at this time relating to the supplemental information	J
		DEPARTMENT OF ENERGY	
R-DOE-A05451-OO	10 CFR Part 797, Loans for Small Hydroelectric Power Project Feasibility Studies and Related Licensing (44 FR 30278).	EPA's feels that section 797.30 which states the purpose of the feasibility study loans, should state explicitly that an environmental impact statement and an environmental assessment are included under loan programs and required as part of the feasibility study. EPA also recommends that the regulations specify in greater detail the environmental factors which must be considered in conducting the feasibility studies.	A
		DEPARTMENT OF THE INTERIOR	
A-BLM-A02144-OO	Resource Report, Outer Continental Shelf Lease Sale #59, Mid-Atlantic (OCS).	EPA's general concerns regarding any potential leasing in this area remains as stated in previous comments on two lease sales in the area, specifically, EPA concerns are related to deepwater technology, mass slumping and onshore impacts. EPA region III and the National Ocean Survey are conducting extensive geological, physical, chemical and biological monitoring of sewage sludge areas in the mid-Atlantic bight off the Delmarva Peninsula.	A
A-IGS-A02143-OO	30 CFR Part 250.11, Proposed Order Governing Oil and Gas Operations on the Outer Continental Shelf of the Arctic Ocean (44 FR 34060).	EPA has no objection to the operational conditions as proposed. However, since some Arctic operations, such as those proposed for the Beaufort Sea, will be conducted from artificial gravel islands there should be some control measures and criteria stipulated for this mode of development.	A
		DEPARTMENT OF TRANSPORTATION	
A-DOT-A86136-OO	Procedures for Considering Environmental Impacts Policies and Procedures (44 FR 31341).	The EPA commended DOT on the clear and succinct language used to implement NEPA into their various activities and emphasizing the issue of environmental studies at the regional planning stage. EPA suggested several minor changes to the regulations.	A
A-FAA-A86135-OO	Policies and Procedures for Considering Environmental Impacts (44 FR 32094).	The EPA commended the FAA on their clear and detailed proposal to implement NEPA. EPA felt that more attention needed to be paid to the impacts on floodplains and to the generation of solid waste. Most of EPA's concerns, however, dealt with aircraft noise. The adoption of a single method for noise description (Ldn) was applauded, but EPA felt that methods to reduce current noise levels and the need to reduce future increases were inadequately described. The incorporation of noise impact analysis into the airport planning process was also insufficiently detailed.	A
		WATER RESOURCES COUNCIL	
R-WRC-A39127-OO	18 CFR Part 704, Procedures for Evaluation of Benefits and Costs in Water Resources Planning (Level C), Procedure of Implementation.	EPA's major concerns about the regulation are that it is too complex and abstract to be consistently implemented in evaluating specific projects. Added clarification of the regulation also should include a definition section, methodologies for evaluating EQ contributions and an expanded explanation of NED costs in the final regulation. EPA recommends that WRC carry out a public and agency training program to assist in understanding and using the manual. EPA also supports the adoption of the regulation once the proposed changes are added to the standards section.	A

Appendix VI—Source for Copies of EPA Comments

A. Public Information Reference Unit (PM-213), Environmental Protection Agency, Room 2922, Waterside Mall, SW, Washington, D.C. 20460.

B. Director of Public Affairs, Region 1, Environmental Protection Agency, John F. Kennedy Federal Building, Boston, Massachusetts 02203.

C. Director of Public Affairs, Region 2, Environmental Protection Agency, 26 Federal Plaza, New York, New York 10007.

D. Director of Public Affairs, Region 3, Environmental Protection Agency, Curtis Building, 6th and Walnut Streets, Philadelphia, Pennsylvania 19106.

E. Director of Public Affairs, Region 4, Environmental Protection Agency, 345 Courtland Street, NE, Atlanta, GA 30308.
F. Director of Public Affairs, Region 5, Environmental Protection Agency, 230 South Dearborn Street, Chicago, Illinois 60604.
G. Director of Public Affairs, Region 6, Environmental Protection Agency, 1201 Elm Street, Dallas, Texas 75270.
H. Director of Public Affairs, Region 7, Environmental Protection Agency, 1735 Baltimore Street, Kansas City, Missouri 64108.
I. Director of Public Affairs, Region 8, Environmental Protection Agency, 1860 Lincoln Street, Denver, Colorado 80203.
J. Office of External Affairs, Region 9, Environmental Protection Agency, 213 Fremont Street, San Francisco, California 94108.
K. Director of Public Affairs, Region 10, Environmental Protection Agency, 1200 Sixth Avenue, Seattle, Washington 98101.

[FR Doc. 80-20013 Filed 7-2-80; 8:45 am]
BILLING CODE 6560-01-M

[FRL 1531-5]

California State Motor Vehicle Pollution Control Standard; Public Hearing

AGENCY: Environmental Protection Agency (EPA).

ACTION: Notice of public hearing.

SUMMARY: The Administrator of EPA granted California a waiver to enforce fuel tank fill pipe and opening specifications for 1977 and subsequent model year gasoline-powered motor vehicles, including motorcycles. On March 14, 1980, the California Air Resources Board (CARB) issued an Executive Order interpreting the specifications and establishing a schedule of compliance for 1979 and subsequent model-year motorcycles. In light of the possible effect of the subsequent Executive Order on the California fill pipe and fuel tank opening requirements, EPA will hold a public hearing for the purpose of reconsidering whether the earlier waiver permitting California to enforce these requirements should remain in effect.

DATES: Hearings July 24 and if necessary July 25, 1980, 8 a.m.

ADDRESS: EPA will hold the public hearing announced in this notice at: U.S. Environmental Protection Agency Regional Office (Region IX), Nevada Room, Sixth Floor, 215 Fremont Street, San Francisco, California. Copies of all materials relevant to the hearing will be available for public inspection during normal working hours (8:00 a.m. to 4:30 p.m.) at: U.S. Environmental Protection Agency, Public Information Reference Unit, Room 2404 (EPA Library), 401 M Street, S.W., Washington, D.C. 20460.

FOR FURTHER INFORMATION CONTACT: Glenn Unterberger, Chief, Waivers Section, Manufacturers Operations Division (EN-340), U.S. Environmental Protection Agency, Washington, D.C. 20460, (202) 472-9421.

SUPPLEMENTARY INFORMATION:

I. Background and Discussion

Section 209(a) of the Clean Air Act, as amended, 42 U.S.C. § 7543(a), provides in part: "No state or any political subdivision thereof shall adopt or attempt to enforce any standard relating to control of emissions from new motor vehicles or new motor vehicle engines subject to this part . . . [or] require certification, inspection, or any other approval relating to the control of emission . . . as condition precedent to the initial retail sale, titling (if any), or registration of such motor vehicle, motor vehicle engine, or equipment."

Section 209(b)(1) of the Act requires the Administrator, after notice and opportunity for public hearing, to waive application of the prohibitions of section 209 to any State which had adopted standards (other than crankcase emission standards) for the control of emissions from new motor vehicles or new motor vehicle engines prior to March 30, 1966, if the State determines that the State standards will be, in the aggregate, at least as protective of public health and welfare as applicable Federal standards. The Administrator must grant a waiver unless he finds that: (1) the determination of the State is arbitrary and capricious, (2) the State does not need the State standards to meet compelling and extraordinary conditions, or the State standards and accompanying enforcement procedures are not consistent with section 202(a) of the Act.[1]

In an earlier decision, the Administrator granted to the State of California a waiver of Federal preemption to adopt and enforce its own fuel tank fill pipe and opening specifications for 1977 and subsequent model year gasoline-powered motor vehicles, including motorcycles.[2] CARB Executive Order G-70-3 established a schedule requiring full compliance with California's fill pipe specifications by the 1982 model year.[3]

In that waiver decison, the administrator concluded that he was unable to find that California's fill pipe and opening specifications were not consistent with section 202(a) of the Act. For motorcycles, the Adminstrator found that, consistent with section 202(a)(2) of the Act, specific technology was available to the motorcycle industry to permit compliance with California's fill pipe specifications by the time the industry would have to comply with those requirements. The Administrator observed that locating a motorcycle's fuel tank opening off-center so that the fill nozzle can be fully inserted into the tank without striking the tank's center hump (possibly along with using a positioning bracket) constituted technology which would be available to meet California's requirements.[4]

On January 21, 1977, Kawasaki Motors Corp. sought judicial review[5] of the Administrator's decision insofar as it permitted California to enforce its fill

[1] Section 209(b), 42 U.S.C. § 7543(b). At the time the Administrator entered his original decision in this preceeding, Section 209(b) was codified at 42 U.S.C. § 1857f-6A and provided:

"(b) The Administrator shall, after notice and opportunity for public hearing, waive application of this section to any State which has adopted Standards (other than crank case emission standards) for the control of emissions from new motor vehicles or new motor vehicle engines prior to March 30, 1966, unless he finds that such State does not require standards to meet compelling and extraordinary conditions or that such State standards and accompanying enforcement procedures are not consistent with section 202(a) of this part."

Thus, under both the earlier and current version of section 209(b), the Administrator could not grant the waiver if he were to find the State standards and enforcement procedures "are not consistent with section 202(a)".

[2] 42 FR 1503 (January 7, 1977). This waiver covered section 2290 of Title 13, California Adminsitrative Code, and "Specifications for Fill-Pipes and Openings of Motor Vehicle Fuel Tanks," dated March 19, 1976, as amended August 5, 1976, and as implemented by Executive Order G-70-1, dated July 27, 1976, and Executive Order G-70-3, dated August 25, 1976.

[3] Executive Orders G-70-1 and G-70-3 authorized motorcycle manufacturers to seek exemptions for those requirements for certain specified reasons (e.g. technological infeasibility) in model years through 1981, but required full compliance by the 1982 model year. Executive Order G-70-3 specifically afforded all motorcycle manufacturers the opportunity to qualify for exemptions from these requirements through the 1981 model year.

[4] The Administrator acknowledged that preventing hydrocarbons from escaping during refueling by sealing the nozzle after insertion into the filler inlet might be difficult with this technology. Specifically, he noted that with this design the automatic shut-off mechanism would stop refueling well before the tank was filled because the service station nozzle would extend at least three inches into the fuel tank. As a result, the only way to refill the tank would be to unseal and withdraw the nozzle. The Administrator emphasized, however, that his determinations regarding the availability of technology did not extend to the issue of its effectiveness. 42 FR 1500 (January 7, 1977).

[5] *Kawasaki Motors Corp., U.S.A. v. Environmental Protection Agency*, D.C. Cir., No. 77-1103

pipe specifications as they apply to motorcycles. On March 14, 1980, as a result of reconsideration of the fill pipe specifications, the California Air Resources Board (CARB) issued a new Executive Order establishing a new schedule of compliance with California's specifications for fill pipes and opening of motor vehicle fuel tanks for 1979 and subsequent model year motorcycles.[6] Among other things, CARB's new executive order terminates, as of January 1, 1983, the exemption from the fill pipe specification requirements which CARB had granted for motorcycles and requires full compliance by all new motorcycles after that date. The new executive order further states that "full compliance" requires that the motorcycle's fuel tank be "capable of being filled with the service station nozzle in the 'normal resting position.' " Moreover, the new executive order authorizes CARB's Executive Officer after that date to exempt motorcycle models using alternative designs achieving the same degree of vapor control only if the fuel tank use in this alternative design is capable of being filled with the vapor recovery system in operation.

Under this new executive order, the technology which the administrator earlier had determined expressly to be available to permit compliance with California's fill pipe specifications may no longer satisfy the requirements of the specifications. The record of the waiver proceedings pertaining to the fill pipe specifications does not now contain enough information to permit the adminstrator to assess adequately whether California's Motorcycle fill Pipe and fuel tank opening requirements are consistent with section 202(a) of the Act. Specifically, the information in the record is not sufficient to enable the Administrator to evaluate fully whether or not technology is available, considering costs of compliance and available lead time, to permit manufacturer to comply with California's requirements as interpreted by CARB Executive Order G-70-16-D. As a result, EPA plans to reopen consideration of this waiver decison by holding a public hearing to elicit information which would enable the Administrator to evaluate this issue.[7]

[6] Executive Order G-70-16-D. This executive order is reprinted as Appendix A to this notice.

[7] EPA plans to consolidate the public hearing on this issue with the following two additional hearings also announced in this issue of the Federal Register.

1. A public hearing to reconsider, in light of a Federal court decision, EPA's earlier decision to grant a waiver permitting California to enforce its own 1982 and subsequent model year passenger car emission standards with respect to American Motors Corporation (AMC).

2. A public hearing to reconsider, in light of the same Federal court decision, EPA's earlier decisions to grant California waivers to enforce its own 1981 and subsequent model year emission standards for light-duty trucks and medium-duty vehicles with respect to AMC.

II. Hearing Procedures

Any party desiring to make a statement at the hearing or to submit material for the hearing record should file a notice of such intention along with 10 copies of the proposed statement and other relevant material by July 16, 1980, with Glenn Unterberger, Manufacturers Operations Division (EN-340), 401 M Street, S.W., Washington, D.C. 20460. In addition, that party should submit 25 copies, if feasible, of the statement or material to the Presiding Officer at the time of the hearing for the hearing record and general circulation.

Because EPA is holding the public hearing ot give interested parties an opportunity to participate in this proceeding by the presentation of data, views, arguments, or other pertinent information, there are no adversary parties as such. The Presiding Officer will not permit public participants to cross-examine one another. The Presiding Officer may strike from the record statements which he deems irrelevant or repetitious, and may impose reasonable limits on the duration of the statement of any witness.

Participants should limit their presentations regarding the subject matter of this notice to the following considerations:

Whether California's motorcycle fuel tank fill pipe and opening specifications, as implemented by CARB executive order G-70-16-D, are inconsistent with section 202(a) of the Act. Specifically, participants should address whether or not technology is available, considering the costs of compliance and available lead time, to permit manufactureres to comply with California's specifications as interpreted and implemented by CARB executive Order G-70-16-D.

In order to assure full opportunity for the presentation of data, views and arguments by participants, the Presiding Officer will, upon request of the participants, allow a reasonable time after the close of the hearing record for interested parties to submit to the record for this proceeding written data, views, arguments, or other pertinent information.

A verbatim record of the proceeding will be available for public inspection at the EPA Public Information Reference Unit. Interested parties, at their own expense, may order copies of the transcript from the reporter during the hearing. The Administrator's decision on this matter may take into account additional information not included in the hearing record. Any such additional information also will be available for public inspection at the EPA Public Information Reference Unit.

Dated: June 24, 1980.

Jeffrey G. Miller,

Acting Assistant Administrator for Enforcement.

[FR Doc. 80-20005 Filed 7-2-80; 8:45 am]

BILLING CODE 6560-01-M

[FRL 1531-6]

California State Motor Vehicle Pollution Control Standards; Public Hearing

AGENCY: Environmental Protection Agency (EPA).

ACTION: Notice of public hearing.

SUMMARY: The Administrator of the EPA has granted California waivers of Federal preemption to enforce the State's exhaust emission standards applicable to all manufacturers' 1979 and subsequent model year light-duty trucks (LDTs) and medium-duty vehicles (MDVs). A subsequent court decision held that American Motors Corporation (AMC) was entitled to two additional years of lead time to meet certain California oxides of nitrogen (NOx) emission standards for passenger cars. AMC has petitioned the Administrator to reconsider the LDT and MDV waiver decisions in light of the court decision insofar as the waiver decisions authorize California to enforce its own NOx standards with respect to 1981 and later model year LDTs and MDVs manufactured by AMC.

The Administrator has decided to reconsider these waivers, and has notified AMC of this decision. As a result EPA will hold a public hearing to consider issues raised in AMC's petition for reconsideration. At that hearing, EPA also will consider any requests which California may file on or before July 7, 1980 to cover amended standards and enforcement procedures for 1981 and later model years and MDVs of less than 4,000 pounds equivalent inertia weight (EIW) or amended standards for 1983 and later model years LDTs or MDVs produced by manufacturers to which I have granted additional lead time under section 202(b)(1)(B) of the Clean Air Act, as amended (Act), to meet Federal NOx standards.

DATES: Hearings held July 24, and if necessary July 25, 1980, 8 a.m. Parties interested in testifying at the hearing should notify EPA by July 16, 1980. EPA

may postpone this hearing to permit consideration of any revised standards or enforcement procedures for which California may request a waiver by July 7, 1980.

ADDRESS: EPA will hold the public hearing announced in this notice at: U.S. Environmental Protection Agency Regional Office (Region IX), Nevada Room, Sixth Floor, 215 Fremont Street, San Francisco, California. Copies of all materials relevant to the hearing are available for public inspection during normal working hours (8:00 a.m. to 4:30 p.m.) at: U.S. Environmental Protection Agency, Public Information Reference Unit, Room 2404 (EPA Library), 401 M Street S.W., Washington, D.C. 20460.

FOR FURTHER INFORMATION CONTACT: Glenn Unterberger, Chief, Waivers Section, Manufacturers Operations Division (EN-340), U.S. Environmental Protection Agency, Washington, D.C. 20460. (202) 472-9421.

SUPPLEMENTARY INFORMATION:

I Background

Section 209(a) of the Clean Air Act, as amended, 42 U.S.C. 7543(a), provides in part the following: "No State or any political subdivision thereof shall adopt or attempt to enforce any standard relating to control of emissions from new motor vehicles or new motor vehicle engines subject to this part [or] require certification, inspection, or any other approval relating to the control of emissions as condition precedent to the initial retail sale, titling (if any), or registration of such motor vehicle, motor vehicle engine, or equipment".

Section 209(b)(1) of the Act requires the Administrator, after notice and opportunity for public hearing, to waive application of the prohibitions of section 209 to any State which had adopted standards (other than crankcase emission standards) for the control of emissions from new motor vehicles or new motor vehicle engines prior to March 30, 1966, if the State determines that the State standards will be, in the aggregate, at least as protective of public health and welfare as applicable Federal standards. The Administrator must grant a waiver unless he finds that: (1) the determination of the State is arbitrary and capricious, (2) the State does not need the State standards to meet compelling and extraordinary conditions, or (3) the State standards and accompanying enforcement procedures are not consistent with section 202(a) of the Act.

In two decisions, the Administrator granted the State of California waivers of Federal preemption to adopt and enforce the California exhaust emission standards applicable to 1979 and subsequent model year light-duty trucks and medium-duty vehicles.[1]

Section 202(b)(1)(B) establishes a Federal oxides of nitrogen (NOx) standard of 1.0 gram per vehicle mile (gpm) applicable to light-duty vehicles and engines manufactured during and after the 1981 model year. However, that section requires the Administrator to prescribe standards in lieu of this which provide that emissions of NOx may not exceed 2.0 gpm for any light-duty vehicle manufactured during model years 1981 and 1982 by any manufacturer which meets certain conditions specified in section 202(b)(1)(B) (i.e. "section 202(b)(1)(B) small-volume manufacturers").[2] On August 15, 1979, the Administrator determined that American Motors Corporation (AMC) was such a manufacturer and prescribed alternative standards for 1981 and 1982 for AMC in accordance with section 202(b)(1)(B).[3]

The United States Court of Appeals for the District of Columbia Circuit has issued a decision interpreting the effect of section 202(b)(1)(B) of the Act on the Administrator's decision to waive Federal preemption for California to enforce 1979 and later model year passenger car standards.[4] In *American Motors Corporation* v. *Blum*,[5] the Court vacated the Administrator's waiver decision "to the extent it permits California to deny AMC the lead time prescribed by section 202(b)(1)(B) of the Act * * *".

On September 14, 1979, AMC petitioned the Administrator to reconsider and amend or modify certain portions of the earlier decisions [6] concerning California's 1979 and later model year LDT and MDV exhaust emission standards.[7] Specifically, with respect to LDTs and MDVs under 6,000 pounds equivalent inertia weight ("EIW"), AMC contends that the waiver decisions are now inconsistent with the holding regarding AMC's California passenger cars in *American Motors Corp.* v. *Blum*.

Pursuant to the Court's order, a notice has been published in today's Federal Register which vacates the passenger car waiver decision to the extent that decision permits California to enforce against AMC 1980 and 1981 passenger car NOx standards other than the California 1979 model year NOx standard of 1.5 gpm. That notice further annouces that EPA will hold a public hearing in order to elicit information so that the Administrator may determine whether he should further modify the earlier decision to the extent it permits California to enforce its passenger car emission standards against AMC in 1982 and later model years.

II. Discussion

AMC argues that as a result of the Court's order, the LDT/MDV waiver decisions result in an inconsistency in the California regulatory scheme. The scheme, in effect, originally required manufacturers to incorporate into passenger cars controls to meet more stringent NOx standards before it required incorporating similar controls into LDTs and MDVs to meet those standards. The scheme thus provided a one-year period for adaption of the controls from passenger cars to LDTs and MDVs.[8] As a result of the Court's decision and today's amendment of the June 14, 1978, waiver decision concerning passenger cars, the situation is now reversed, with AMC's LDTs and MDVs having to meet a 1.0 gpm NOx standard in California in the 1981 model year, before AMC's passenger cars are required to meet that same standard.

Since California's lead time determinations for LDTs and MDVs rely on adaption of technology previously incorporated in passenger cars,[9] the validity of these determinations for manufacturers such as AMC is in doubt.

AMC's petition for reconsideration, thus, asserts that section 202(b)(1)(B), in light of the Court's decision, affects the LDT and MDV waiver decisions of January 12 and April 13, 1978, in such a way as to require that the Administrator now find an inconsistency with section

[1] 43 FR 1829 (January 12, 1978) (for California's 1979-1982 model year LDTs and MDVs); 43 FR 15490 (April 13, 1978) (for California's 1983 and later model year LDTs and MDVs).

[2] Those criteria are that the manufacturer's production for calendar year 1976 was less than 300,000 light-duty motor vehicles worldwide and that:

(i) the ability of such manufacturer to meet emission standards was, and is, primarily dependent upon technology developed by other manufacturers and purchased from such manufacturers; and

(ii) such manufacturer lacks the financial resources and technological ability to develop such technology.

[3] 44 FR 47880 (April 15, 1979).

[4] 43 FR 25729 (June 14, 1978).

[5] 603 F. 2d 978 (D.C. Cir. 1979).

[6] *See* n. 1, supra.

[7] Petition for Reconsideration of the Waiver Decisions for California Exhaust Emissions Standards Applicable to Oxides of Nitrogen for 1981 and Later Light-Duty Trucks and Medium-Duty Vehicles, from William C. Jones, Manager, Vehicle Emissions and Fuel Economy Standards, AMC, to Douglas M. Costle, Administrator, U.S. EPA, dated September 14, 1979 (hereinafter "Petition for Reconsideration")

[8] Letter from Gary Rubenstein, Deputy Executive Officer, CARB, to Benjamin Jackson, Deputy Assistant Administrator, U.S. EPA, dated December 3, 1979, at p. 3.

[9] *Id.*

202(a) mandating reversal of those earlier decisions. The hearing announced in this notice will provide a forum for discussion of this issue.

This hearing may also serve to elicit information which will permit EPA to evaluate, in light of the Court's decision, whether section 209(b) of the Act requires that the Administrator grant any requests which California may file on or before July 7, 1980, for a waiver to enforce different 1981 and subsequent model year LDT and MDV standards which take into account the lead time constraints AMC faces as a section 202(b)(1)(B) small-volume manufacturer. Should California request a waiver for such standards by July 7, 1980, EPA will either permit consideration of those standards at the scheduled hearing or postpone the public hearing announced here if necessary to permit consideration of these standards.[10]

III. Hearing Procedures

Any person desiring to make a statement at the hearing or to submit material for the hearing record should file a notice of such intention along with 10 copies of the proposed statement and other relevant material by July 16, 1980, with Glenn Unterberger, Manufacturers Operations Division (EN-340), 401 M Street S.W., Washington, D.C. 20460. In addition, if feasible, 25 copies of that statement or material for the hearing record and general circulation should be submitted to the Presiding Officer at the time of the public hearing.

Since the public hearing is designed to give interested persons an opportunity to participate in this proceeding by the presentation of data, views, arguments, or other pertinent information, there are no adversary parties as such. Statements by the participants will not be subject to cross-examination. The Presiding Officer is authorized to strike from the record statements which he deems irrelevant or repetitious and to impose reasonable limits on the duration of the statement of any witness.

Participants should limit their presentations regarding the subject matter of this notice to the following consideration:

Whether California's adopted NOx emission standards for 1981 and subsequent model year LDTs and MDVs are consistent with section 202(a) of the Act insofar as those standards apply to AMC, a manufacturer which has qualified under section 202(b)(1)(B) for two years of additional lead time to meet the Federal 1.0 gpm passenger car NOx emission standard and, as result, is entitled to additional lead time in meeting the California 1.0 gpm passenger car NOx standard.

In order to assure full opportunity for the presentation of data, views and arguments by participants, the Presiding Officer will, upon request of the participants, allow a reasonable time after the close of the hearing for the submission of written data, views, arguments or other pertinent information to be included as part of the hearing record.

A verbatim record of the proceeding will be available for public inspection at the EPA Public Information Reference Unit. A copy of the transcript may be requested from the reporter during the hearing and will be made at the expense of the person so requesting. The determination of the Administrator of the action to be taken is not required to be made solely on the record of the public hearing. Other pertinent information also will be available for public inspection at the EPA Public Information Reference Unit.

Dated: June 27, 1980.

Douglas M. Costle,

Administrator.

[FR Doc. 80-20006 Filed 7-2-80; 8:45 am]

BILLING CODE 6560-01-M

[10] EPA plans to consolidate the public hearing on these pending issues with the following two additional public hearings also announced in today's Federal Register:

1. A public hearing to reconsider, in light of the Court's decision in *American Motors Corp. v. Blum*, the Administrator's earlier decision to grant a waiver permitting California to enforce its own 1982 and subequent model year passenger car emission standards against AMC, a section 202(b)(1)(B) small-volume manufacturer.

2. A public hearing to reconsider, in light of manufacturers' objections and a new California Air Resources Board Executive Order, the Administrator's earlier decision to grant California a waiver to enforce its motor vehicle fill pipe and fuel tank opening specification requirements insofar as these requirements apply to new motorcycles.

[FRL 1531-7]

California State Motor Vehicle Pollution Control Standards; Modification of Waiver of Federal Preemption; Notice of Public Hearing

AGENCY: Environmental Protection Agency (EPA).

ACTION: Modification of previous waiver of Federal preemption, and notice of public hearing.

SUMMARY: By this notice, issued pursuant to Federal court order,[1] I am amending my decision, issued under section 209(b) of the Clean Air Act, as amended (Act),[2] which granted the State of California a waiver of Federal preemption to enforce California exhaust emission standards applicable to 1979 and subsequent model year passenger cars.[3] The Court vacated this decision to the extent it denied American Motors Corporation (AMC) the lead time prescribed by section 202(b)(1)(B) of the Act.[4] In response to the Court's decision, I am vacating the earlier waiver decision to the extent it authorizes California to enforce an oxides of nitrogen (NO_x) emission standard that is more stringent than the 1.5 grams per vehicle mile (gpm) 1979 model year California NO_x standard against AMC passenger cars for model years 1980 and 1981.

EPA will hold a public hearing to consider whether, in light of the Court's decision, California's passenger car standards scheduled for 1982 and later model years are consistent with section 202(a) of the Act insofar as they apply to AMC. California remains free, however, to seek new waivers to enforce any modified passenger car emission standards it may adopt for the 1980 and subsequent model years consistent with the court decision.

DATES: Hearings July 24 and if necessary July 25, 1980, 8 a.m. Parties interested in testifying at the hearing should notify EPA by July 16, 1980. EPA may postpone this hearing to permit consideration of any new 1980 and later model year AMC passenger car standards for which California may request a waiver by July 7, 1980.

ADDRESSES: EPA will hold the public hearing announced in this notice at: U.S. Environmental Protection Agency Regional Office (Region IX), Nevada Room, Sixth Floor, 215 Fremont Street, San Francisco, California. Copies of all materials relevant to the hearing are available for public inspection during normal working hours (8 a.m. to 4:30 p.m.) at: U.S. Environmental Protection Agency, Public Information Reference Unit, Room 2404 (EPA Library), 401 M Street, S.W., Washington, D.C. 20460.

FOR FURTHER INFORMATION CONTACT: Glenn Unterberger, Chief, Waivers Section, Manufacturers Operations Division (EN-340), U.S. Environmental Protection Agency, Washington, D.C. 20460, (202) 472-9421.

SUPLEMENTARY INFORMATION:

I. Background

Section 209(a) of the Act prohibits a State or any political subdivision thereof

[1] *American Motors Corp. v. Blum*, 603 F.2d 978 (D.C. Cir. 1979).

[2] 42 U.S.C. § 7543(b) (Supp I 1977).

[3] 43 FR 25729 (June 14, 1978).

[4] 42 U.S.C. § 7521(b)(1)(B) (Supp I 1977).

from adopting or attempting to enforce any standard relating to the control of emissions from new motor vehicles or new motor vehicle engines. However, section 209(b) authorizes me to waive application of that section to any State which has adopted standards for the control of emissions from new motor vehicles prior to March 30, 1966, if the State determines that its standards will be, in the aggregate, at least as protective of public health and welfare as applicable Federal standards.

Section 209(b)(1) further provides, in part, that no waiver of Federal preemption shall be granted covering State standards for the control of emissions from new motor vehicles or new motor vehicle engines if I find that "such standards . . . are not consistent with section 202(a)".

On June 14, 1978, my decision was published granting California a waiver of Federal preemption to enforce its exhaust emission standards applicable to 1979 and subsequent model year passenger cars.[5] Those standards included a 1.0 gpm NO_x standard for the 1980 model year and lower NO_x standards for subsequent years.

Subsequent to the waiver decision, AMC filed a petition in the United States Court of Appeals for the District of Columbia Circuit challenging the decision as applied to AMC. Specifically, AMC claimed that the California standards for which I granted a waiver of Federal preemption denied AMC the "lead time" mandated by Congress in section 202(b)(1)(B).

Section 202(b)(1)(B) establishes a Federal NO_x standard of 1.0 gpm applicable to light-duty vehicles and engines manufactured during and after the 1981 model year. However, this section also provides for a two-year delay in applying the Federal 1.0 gpm NO_x standard to certain small-volume manufacturers.[6] The two-year delay provision was designed to provide small-volume manufacturers who are dependent on other manufacturers for emission control technology (i.e., "vendor-dependent" manufacturers) extra lead-time to incorporate into their own vehicles the new three-way catalyst technology developed by other manufacturers and regarded as necessary to meet a 1.0 gpm NO_x standard.[7]

On July 20, 1979, the United States Court of Appeals for the District of Columbia Circuit handed down a decision, *American Motors Corporation v. Blum*, in which the Court largely upheld AMC's challenges to the California waiver decision. The Court looked to the legislative history of the Act, and found that Congress intended through section 202(b)(1)(B) to give small-volume, vendor-dependent manufacturers such as AMC additional lead-time to meet the Federal 1.0 gpm "statutory" NO_x standard scheduled for the 1981 model year because such manufacturers need to adapt NO_x emission control systems developed by other automakers to their own product lines. The Court held that this additional lead-time requirement applied to California as well as Federal NO_x standards. Therefore, the Court vacated the June 14, 1978, decision "to the extent it permits California to deny AMC the lead-time prescribed by section 202(b)(1)(B) of the Act."

In a decision published on August 15, 1979, I determined that AMC indeed met the requirements of section 202(b)(1)(B), and therefore qualified for an additional two years to meet the Federal NOx standard of 1.0 gpm.[8]

II. Discussion

Under the Court decision, AMC is entitled to the same two years of additional lead time to meet the 1.0 gpm California NOx standard as it has received for complying with the Federal NOx standard. Accordingly, I am vacating my previous waiver decision to the extent that it permits California to enforce a NOx standard more stringent than 1.5 gpm for the 1980 and 1981 model years to AMC passenger cars.[9] In the absence of any new waiver I may grant to California consistent with the Court decision, this leaves California's 1979 NOx standard of 1.5 gpm in place for the 1980 and 1981 model years for AMC passenger cars, thus providing AMC with the two years of additional lead time required by the Court decision.

As indicated above, EPA will also consider at the public hearing announced in this notice whether, in light of the Court's decision, my June 14, 1978, waiver decision is consistent with section 202(a) of the Act to the extent that the decision permits California to enforce its 1982 and subsequent model year passenger car standards against AMC. The standards which California has scheduled to apply to all manufacturers for 1982 and subsequent model years, and the gradual decrease in permissible levels of NOx emissions provided by those standards, represent deliberate choices by California which took into account the state's particular air quality conditions and needs and the technological capabilities of automobile manufacturers as a class. In granting a waiver to cover these standards, however, I did not take into account the potential lead time problems of AMC as a section 202(b)(1)(B) small-volume manufacturer. Thus, I need to determine whether California's 1982 and subsequent model year standards do not adequately account under the Court's decision for the effect which section 202(b)(1)(B)'s requirement to delay imposition of an unqualified 1.0 NOx standard for AMC passenger cars would have on the ability of AMC, as a section 202(b)(1)(B) small-volume manufacturer, to meet NOx standards more stringent than 1.0 gpm in post-1981 model years.

The information presently in the record of my earlier waiver decision is not sufficient to permit me to evaluate the effect which a two-year delay in the unqualified 1.0 gpm NOx standards would have an AMC's ability to meet California's post-1981 model year NOx standards. As a result, I am reopening the record of this waiver decision to elicit information which will enable me to evaluate this issue. This additional information will permit me to determine whether these standards, as they apply to AMC, are inconsistent with section 202(a) of the Act in light of the Court's decision.[10]

---

[5] 43 FR 25729 (June 14, 1978).

[6] Section 202(b)(1)(B) provides, in part: The Administrator shall prescribe standards in lieu of [the 1.0 grams per vehicle mile standard otherwise required] which provide that emissions of oxides of nitrogen may not exceed 2.0 grams per vehicle mile for any light-duty vehicle manufactured during model years 1981 and 1982 by any manufacturer whose production, by corporate identity, for calendar year 1976 was less than three hundred thousand light-duty motor vehicles worldwide if the Administrator determines that—

(i) the ability of such manufacturer to meet emission standards in the 1975 and subsequent model years was, and is, primarily dependent upon technology developed by other manufacturers and purchased from such manufacturers; and

(ii) such manufacturer lacks the financial resources and technological ability to develop such technology.

[7] H.R. Rep. No. 95-564, 95th Cong., 1st Sess., 165-166 (1977). 123 Cong. Rec., S9223 (daily ed. June 9, 1977).

[8] 44 FR 47880 (August 15, 1979).

[9] The additional lead time granted for compliance with the 1.0 gpm NOx standard necessarily applies to the level of highway NOx emissions California may require AMC to meet, since the California highway standard for AMC passenger cars still cannot exceed 1.33 times the California NOx standard applicable to AMC passenger cars. *See* 44 FR 38660 (July 2, 1979).

The modification to my June 14, 1978, waiver decision which I am announcing here applies to California's "50,000-mile" NOx standard (i.e., the NOx standard which a vehicle tested for certification purposes must meet while it accumulates 50,000 miles). The modification does not affect waivers I have granted for California's 100,000-mile NOx standards. *See* 45 FR 12291 (February 25, 1980); 43 FR 25729 (June 14, 1978).

[10] I do not view the Court's decision as necessarily requiring two years of additional lead time under section 202(b)(1)(B) for AMC every time California's regulations impose a NOx standard more stringent than 1.0 gpm in the 1982 and

Footnotes continued on next page

California may seek a new waiver for different 1980 and 1981 as well as post-1981 passenger car standards for AMC which expressly take into account the lead time constraints AMC faces as a section 202(b)(1)(b) small-volume manufacturer. Should California request a waiver for such standards by July 7, 1980, I will permit consideration of these standards at the scheduled hearing or will consider postponing the hearing if necessary to permit interested parties to make adequate preparation.[11]

III. Hearing Procedures

Any party desiring to make a statement at the hearing or to submit material for the hearing record should file a notice of such intention along with 10 copies of the proposed statement or other relevant material by July 16, 1980, with Glenn Unterberger, Manufacturers Operations Division (EN-340), 401 M Street SW., Washington, DC 20460. In addition, that party should submit 25 copies, if feasible, of that statement or material to the Presiding Officer at the time of the hearing for the hearing record and general circulation.

Because EPA is holding the public hearing to give interested parties an opportunity to participate in this proceeding by the presentation of data, views, arguments, or other pertinent information, there are no adversary parties as such. The Presiding Officer will not permit public participants to cross-examine one another. The Presiding Officer may strike from the record statements which he deems irrelevant or repetitious, and may impose reasonable limits on the duration of the statement of any witness.

Participants should limit their presentations regarding the subject matter of this notice to the following consideration:

Whether California's adopted NOx emission standards for 1982 and subsequent model year passenger cars are not consistent with section 202(a) of the Act insofar as those standards apply to AMC, small-volume manufacturer qualifying under 202(b)(1)(B) of the Act for two additional years of lead time to meet a 1.0 gpm California passenger car NOx standard.

In order to assure full opportunity for the presentation of data, views and arguments by participants, the Presiding Officer will, upon request of the participants, allow a reasonable time after the close of the hearing for interested parties to submit to the record for this proceeding written data, views, arguments, or other pertinent information.

A verbatim record of the proceeding will be available for public inspection at the EPA Public Information Reference Unit. Interested parties, at their own expense, may order copies of the transcript from the reporter during the hearing.

My decision on this matter may take into account additional information which also will be available for public inspection at the EPA Public Information Reference Unit.

IV. Finding and Decision

Pursuant to the Court's decision in *American Motors Corporation v. Blum*, I hereby amend the June 14, 1978, decision which waived application of section 209(a) to permit California to enforce its exhaust emission standards for 1979 and subsequent model passenger cars. I amend that decision by vacating it to the extent it permits California to enforce against AMC its own passenger car NOx standards other than the California 1979 model year NOx standard of 1.5 gpm for model years 1980 and 1981.[12] I will announce my decision on whether to amend that earlier waiver decision insofar as it permits California to enforce its 1982 and subsequent model year passenger car emission standards against AMC subsequent to the public hearing on that issue.

This amendment of the June 14, 1978, waiver decision will affect not only persons in California but also AMC, which is located outside the state and which must comply with California's standards in order to produce passenger cars for sale in California. For this reason, I hereby determine and find that this decision is of nationwide scope and effect.

Dated: June 27, 1980.

Douglas M. Costle,

Administrator.

[FR Doc. 80-20007 Filed 7-2-80; 8:45 am]

BILLING CODE 6560-01-M

Footnotes continued from last page subsequent model years. Rather, I view the Court's decision as requiring that I consider whether manufacturers entitled to additional lead time under section 202(b)(1)(B) to meet the 1.0 gpm Federal NOx standard (i.e. section 202(b)(1)(B) small-volume manufacturers) also requires extra lead time to meet California's NOx standards. As noted by the Court, section 202(b)(1)(B) mandates additional lead time for the 1980 and 1981 model years because meeting a NOx standard of 1.0 gpm or less requires new three-way catalytic converter technology which a small volume manufacturer must purchase from a larger manufacturer. *American Motors Corp. v. Blum*, 603 F.2d 978, 980 (D.C. Cir., 1979), citing 123 Cong. Rec. 519232 (daily ed. June 9, 1977) (remarks of Senator Nelson). Unless drastically new technology, not readily available to AMC except through purchase from other manufacturers, is needed to meet California's post-1981 model year NOx standards, it is quite possible that AMC will need less than two years of additional lead time, if it indeed needs any additional lead time at all, to meet those later model year standards.

Also I do not view the Court's decision as altering the basic burdens of proof among the various parties in a waiver proceeding. The burden of proof in the context of a waiver proceeding was discussed in the June 14, 1978, waiver decision (43 FR 25729), and the Agency's view was affirmed by the Court in *Motor and Equipment Manufacturers Association, Inc., v. EPA*, ——— F.2d ———, No. 78-1896 (D.C. Cir., decided August 3, 1979), *cert. denied*, ——— U.S. ———, May 19, 1980.

[11] EPA plans to consolidate the public hearing on these pending issues with the following two additional public hearings also announced in today's Federal Register:

1. A public hearing to reconsider, in light of the Court's decision in *American Motors Corp. v. Blum*, my earlier decisions to grant California waivers to enforce its own 1981 and subsequent model year emission standards for light-duty trucks and medium-duty vehicles against AMC, a section 202(b)(1)(B) small-volume manufacturer. As part of this hearing, EPA will consider any California request for a waiver for amended NOx standards and enforcement procedures applicable to 1981 and later model year light-duty trucks and medium-duty vehicles produced by section 202(b)(1)(B) small-volume manufacturers.

2. A public hearing to reconsider, in light of manufacturers' objections and a new California Air Resources Board Executive Order, my earlier decision to grant California a waiver to enforce its motor vehicle fill pipe and fuel tank opening specification requirements insofar as those requirements apply to new motorcycles.

[12] My action today, as was the Court's decision in *American Motors Corporation v. Blum*, is limited in applicability to AMC. However, if and when any other manufacturer receives under section 202(b)(1)(B) an extra two years to meet the federal 1.0 gpm NOx standard, I will consider similar action with respect to that manufacturer.

[FRL 1530-7]

Central Contra Costa Sanitary District Stage 5B Enlargements Project Environmental Impact Statement (EIS); Withdrawal of Notice of Intent To Prepare EIS

AGENCY: Environmental Protection Agency, Region 9, San Francisco.

ACTION: Withdrawal of Notice of Intent to prepare an Environmental Impact Statement.

SUMMARY: EPA Region 9 issued a Notice of Intent to prepare an Environmental Impact Statement for the Central Contra Costa Sanitary District Stage 5B Enlargements Project on July 23, 1975. EPA is withdrawing that Notice at this time because of developments and project changes that have occurred since the EIS process was initiated. The Agency will review the facility plan and project report upon its completion to ensure that the National Environmental Policy Act requirements are met.

DATE: Effective July 18, 1980.

FOR FURTHER INFORMATION CONTACT: Frederick S. Leif, Chief, Construction Grants Section, California Branch, Water Division, Environmental Protection Agency, Region IX, (415) 556-3111.

Dated: June 26, 1980.

William N. Hedeman, Jr.,

Director, Office of Environmental Review (A-104).

[FR Doc. 80-20012 Filed 7-2-80; 8:45 am]

BILLING CODE 6560-01-M

[OPP-00123, FRL 1532-2]

FIFRA Scientific Advisory Panel; Open Meeting

AGENCY: Environmental Protection Agency (EPA).

ACTION: Notice.

SUMMARY: There will be a two-day meeting of the Federal Insecticide, Fungicide, and Rodenticide Act (FIFRA) Scientific Advisory Panel to complete Panel review of proposed regulatory action to conclude the rebuttable presumption against registration (RPAR) on lindane. The meeting will be open to the public.

DATE: Thursday and Friday, July 24, and 25, 1980, from 9:00 a.m. to 5:00 p.m. daily.

ADDRESS: The meeting will be held at the: Hospitality House, 2000 Jefferson Davis Highway, Arlington, VA, 703/920-8600.

FOR FURTHER INFORMATION CONTACT: H. Wade Fowler, Jr., Executive Secretary, FIFRA Scientific Advisory Panel, (TS-766), Office of Pesticide Programs, Rm. 803, Crystal Mall, Building No. 2, 1921 Jefferson Davis Highway, Arlington, VA 22202, 703-557-7560.

SUPPLEMENTARY INFORMATION: The agenda for this meeting is:

1. Completion of Panel review of proposed regulatory action to conclude the RPAR on lindane;
2. Completion of any unfinished business from previous Panel meetings; and
3. In addition, the agency may present status reports on other ongoing programs of the Office of Pesticide Programs.

Copies of draft documents concerning item 1 may be obtained by contacting: Robert Brown, Special Pesticides Review Division (TS-791), Room 728A, Crystal Mall, Building No. 2, at the address given above, telephone: 703/557-8193.

Any member of the public wishing to attend or submit a paper should contact Dr. H. Wade Fowler, Jr., at the address or phone listed above to be sure that the meeting is still scheduled and to confirm the Panel's agenda. Interested persons are permitted to file written statements before or after the meeting, and may, upon advance notice to the Executive Secretary, present oral statements to the extent that time permits. All statements will be made part of the record and will be taken into consideration by the Panel in formulating comments or in deciding to waive comments. Persons desirous of making oral statements must notify the Executive Secretary and submit the required number of copies of a summary no later than July 18, 1980.

Individuals who wish to file written statements are advised to contact the Executive Secretary in a timely manner to be instructed on the format and the number of copies to submit to ensure appropriate consideration by the Panel.

The tentative date for the next Scientific Advisory Panel meeting is August 13, 14, and 15, 1980.

(Sec. 25(d), as amended, (92 Stat. 819; 7 U.S.C. 136); sec. 10(a)(2), 86 Stat. 770 (5 U.S.C. App.))

Dated: June 27, 1980.

Edwin L. Johnson,

Deputy Assistant Administrator for Pesticide Programs.

[FR Doc. 80-20009 Filed 7-2-80; 8:45 am]

BILLING CODE 6560-01-M

[OPP-30000/10C; FRL 1531-8]

Preliminary Notice of Determination Concluding the Rebuttable Presumption Against Registration of Pesticide Products Containing Lindane; Availability of Position Document 2/3

AGENCY: Office of Pesticide Programs, Environmental Protection Agency (EPA).

ACTION: Preliminary notice of determination; availability of position document on Lindane.

SUMMARY: On February 18, 1977, the Environmental Protection Agency issued a notice of rebuttable presumption against registration and continued registration (RPAR) of pesticide products containing Lindane. After reviewing all available information, the Agency subsequently concluded that the presumptions for oncogenicity, and reproductive and fetotoxic effects had not been rebutted. The Agency was also concerned about the potential of the acute hazards to humans from Lindane use even though the risk concerns might not technically fit within existing triggers. These risks were of sufficient concern to require the Agency to consider whether there were offsetting economic, social or environmental benefits and the Agency therefore reviewed information relating to benefits.

After considering risks against benefits, the Agency has reached a preliminary decision that risks for some uses may be reduced, so that they are not unreasonable, by modifying the terms and conditions of registration for those uses. For other uses, the Agency has reached a preliminary decision to issue a notice to cancel or deny applications for registration. These determinations are at this point preliminary, pending external review by the United States Department of Agriculture and the Scientific Advisory Panel, pursuant to Sections 6(b) and 25(d) of the Federald Insecticide, Fungicide, and Rodenticide Act. The Agency's proposed decision is to initiate actions to cancel registrations or deny applications for the following uses—seed treatment, avocados, ornamentals (homeowner use), cucurbits, Christmas trees, pecans, forestry, structures, flea collars, dog dusts, dog shampoos, household uses and minor uses. The Agency also proposes to initiate actions to cancel registrations or deny applications for the hardwood logs and lumber use, effective after two years, and to modify the terms and conditions of registration in the interim. The Agency also proposes to cancel registrations or deny applications unless the terms and conditions of registration are modified for the following use—ornamentals (commercial use), livestock, pineapples and dog washes.

DATE: Comments must be received on or before August 4, 1980.

ADDRESS COMMENTS TO: Document Control Office (TS-793), Rm. E-447, Office of Pesticides and Toxic Substances, EPA, 401 M St., SW, Washington, DC 20460.

FOR FURTHER INFORMATION CONTACT: Richard Troast, Project Manager, Special Pesticide Review Division, Office of Pesticide Programs (TS-791), Room 711E, Crystal Mall II, 1921 Jefferson Davis Highway, Arlington, Virginia 22202, (703) 577-7420.

SUPPLEMENTARY INFORMATION: The Preliminary Notice of Determination and the Lindane Position Document set forth in detail the reasons for the regulatory actions being proposed. As required by the Federal Insecticide, Fungicide, and Rodenticide Act (FIFRA), as amended, copies of this Preliminary Notice of Determination and the Position Document are being transmitted to the Secretary of Agriculture and the Scientific Advisory Panel for comment; these documents are also being provided to the affected registrants and applicants for registration. Other interested persons may receive a copy of the Position Document by contacting Richard Troast, Project Manager, at the address given.

All comments should be sent to the Document Control Office at the EPA

Headquarters address given. Three copies of the comments should be submitted to facilitate the work of the Agency and others interested in inspecting the comments. The comments should bear the identifying notation OPP-30000/10C.

I. Introduction

On February 18, 1977, the Environmental Protection Agency issued a notice of rebuttable presumption against registration and continued registration ("RPAR") of pesticide products containing lindane (42 FR 9816), a chlorinated hydrocarbon insecticide thereby initiating the Agency's public review of the risks and benefits of lindane. The rebuttable presumption was issed on the basis of (1) oncogenicity, (2) reproductive and fetotoxic effects and (3) acute toxicity to aquatic organisms. The Agency also requested registrants and other interested parties to submit data on the following effects: (1) mutagenicity, (2) blood dyscrasias, (3) acute hazards to humans and domestic animals and, (4) population reduction in nontarget avian species. Information was also solicited on the possible isomerization of lindane (gamma-BHC) to the alpha and beta isomers of BHC.

This notice constitutes the Agency's Notice of Determination (Notice) pursuant to 40 CFR 162.11(a)(5). This determination is preliminary at this point pending external review through submission to, and review by, the United States Department of Agriculture and the Scientific Advisory Panel, pursuant to Sections 6(b) and 25(d) of the Federal Fungicide, Insecticide, and Rodenticide Act (FIFRA) as amended. The action does not become final until the Agency has reviewed the comments of these reviewers and issued a final notice.

In broad summary, the Agency has determined that lindane continues to meet or exceed the risk criteria outlined in 40 CFR 162.11 for oncogenicity, and reproductive and fetotoxic effects. The presumption issed on the basis of acute effects to aquatic organisms has been withdrawn since no lindane products are currently registered for direct aquatic application. The Agency also evaluated the information received pursuant to its request on risk concerns which did not meet RPAR triggers. For these areas of concern, the Agency concluded that (1) the existing data does not meet or exceed the risk criteria for mutagenicity although the positive mutagenic responses observed in several studies reinforce the Agency's oncogenicity presumption; (2) there is insufficient epidemiologic evidence to firmly establish a cause-effect relationship between lindane and blood dyscrasias in humans, although the Agency remains concerned that the hematopoietic tissues of certain individuals, particularly children, may be particularly sensitive to lindane; (3) the information on acute hazards to humans received during the rebuttal process serves to reinforce the Agency concern (even though the risk may not meet the acute toxicity presumption), in view of the fact that exposure to lindane in both test animals and humans can cause acute adverse effects and that children may be especially sensitive to these effects of lindane; (4) there is insufficient evidence to initiate a rebuttable presumption on the basis of possible population reduction in nontarget avian species, and (5) microbial isomerization is not significant and that isomerization of lindane does not take place to any appreciable extent in plants and animals.

The risks that lindane poses to certain exposed groups are of sufficient concern to require the Agency to consider whether these risks can be reduced. The Agency has considered benefits information including that submitted by registrants, interested persons, and the United States Department of Agriculture and has analyzed the economic, social and environmental benefits of the uses of lindane. The Agency has weighed risks and benefits togethere, in order to determine whether the risks of each lindane use are warranted by the benefits of the use. In weighing risks and benefits, the Agency considered what risk reductions could be achieved and how risk reduction measures would affect the benefits of the use.

The Agency has determined that the risks of certain uses of lindane are greater than the social economic, and environmental benefits of these uses, and that risk reduction measures cannot reduce the risk to an acceptable level. Accordingly, the Agency is proposing to initiate action to cancel or deny registrations for all such uses including the seed treatment use, avocados, cucurbits, christmas trees, pecans, forestry, structures, ornamental (homeowner use), flea collars, dog dusts, dog shampoos, household uses and minor uses. The Agency is also proposing to cancel registrations or deny applications for the hardwood log and lumber use, with a two year phase out period during which risks are to be reduced through modification in the terms and conditions of registration. The Agency has determined that the cancellation of these uses of lindane will not have a significant impact on the production and prices of agricultural commodities, retail food prices and otherwise on the agricultural economy. For the remaining uses, namely ornamentals (commercial use), livestock, pineapples and dog washes, the Agency has determined that the risks of lindane uses are greater than the social, economic, and environmental benefits of these uses, unless risk reductions are accomplished by modifications in the terms and conditions of registration. Accordingly, the Agency is proposing to initiate action to cancel or deny registration for ornamentals (commercial use), livestock, pineapples and dog washes unless the terms and conditions of registration are modified. These modifications include, for all these uses, a specified label warnings to users, women, and parents; in addition, for ornamentals (commercial use), livestock and dog washes, the following label modifications are required:

(1) The classification of lindane as a restricted use pesticide.

(2) The requirement for protective clothing for applicators.

The Agency has further determined that these modifications in the terms or conditions or registration accomplish significant risk reductions, and that these risk reductions can be achieved without significant impacts on the benefits of the uses. These modifications in the terms and conditions of registration for the above uses will not have a significant impact on the agricultural economy.

The remainder of this notice and the accompanying Position Document set forth in detail the Agency analysis of comments submitted during the rebuttal phase of the lindane RPAR, and the Agency's reasons and factual bases for the regulatory actions it is initiating. The Notice is organized into four sections. Section I is this introduction. Section II, titled "Legal Background", sets forth a general discussion of the regulatory framework within which this action is taken. Section III sets forth the Agency's determinations concluding the lindane RPAR and initiating the regulatory actions which flow from these determinations. Section III and the accompanying Position Document set forth the basis for these determinations. Section IV, titled "Procedural Matters", provides a brief discussion of the procedures which will be followed in implementing ther regulatory actions which the Agency is initiating in this Notice.

II. Legal Background

In order to obtain a registration for a pesticide under FIFRA, a manufacturer

must demonstrate that the pesticide satisfies the statutory standard for registration. That standard requires (among other things) that the pesticide perform its intended function without causing "unreasonable adverse effects on the environment" (Section 3(c)(5)). The term "unreasonable adverse effects on the environment" is defined as "any unreasonable risk to man or the environment, taking into account the economic, social, and environmental costs and benefits of the use of any pesticide" (FIFRA, Section 2(bb)). In effect, this standard requires a finding that the benefits of each use of the pesticide exceed the risks of use, when the pesticide is used in accordance with commonly recognized practices. The burden of proving that a pesticide satisfies the registration standard is on the proponents of registration and continues as long as the registration remains in effect. Under Section 6 of FIFRA, the Administrator is required to cancel the registration of a pesticide or modify the terms and conditions of registration whenever he determines that the pesticide no longer satisfies the statutory standard for registration.

The Agency created the RPAR process to facilitate the identification of pesticide uses which may not satisfy the statutory standard for registration and to provide a public, informal procedure for the gathering and evaluation of information about the risks and benefits of these uses. The regulations governing the RPAR process are set forth at 40 CFR 162.11. This section provides that a rebuttable presumption shall arise if a pesticide meets or exceeds any of the risk criteria set out in the regulations.

The Agency generally announces that a RPAR has arisen by publishing a notice in the Federal Register. After an RPAR is issued, registrants and other interested persons are invited to review the data upon which the presumption is based and to submit data and information to rebut the presumption. Respondents may rebut the presumption of risk by showing that the Agency's initial determination of risk was in error, or by showing that use of the pesticide is not likely to result in any significant exposure to humans or to animals or plants of concern with regard to the adverse effects in question. See 40 CFR 162.11(a)(4). Further, in addition to submitting evidence to rebut the risk presumption, respondents may submit evidence as to whether the economic, social, and environmental benefits of the use of the pesticide subject to the presumption outweigh the risks of use.

The regulations require the Agency to conclude an RPAR by issuing a Notice of Determination in which the Agency states and explains its position on the question of whether the risk presumptions have been rebutted. If the Agency determines that a presumption is not rebutted, it will then consider information relating to the social, economic and environmental costs and benefits which registrants and other interested persons submitted to the Agency, and any other benefits information known to the Agency.

After weighing the risks and the benefits of a pesticide use, the Administrator may conclude the RPAR process by issuing a notice of intent to cancel or deny registration pursuant to FIFRA Section 6(b)(1) and Section 3(c)(6) or by issuing a notice of intent to hold a hearing pursuant to Section 6(b)(2) of FIFRA to determine whether the registrations should be cancelled or applications for registration denied.

In determining whether the use of a pesticide poses risks which are greater than benefits, the Agency considers modifications to the terms and conditions of registration which can reduce risks, and the impacts of such modifications on the benefits of the use. Among the risk reduction measures short of cancellation which are available to the Agency are changes in the directions for use on the pesticide's labeling and classification of the pesticide for "restricted use" pursuant to FIFRA Section 3(d).

FIFRA requires the Agency to submit notices issued pursuant to Section 6 to the Secretary of Agriculture for comment and to provide the Secretary of Agriculture with an analysis of the impact of the proposed action on the agricultural economy (Section 6(b)). The Agency is required to submit these documents to the Secretary at least 60 days before making the notice public. If the Secretary of Agriculture comments in writing within 30 days after receiving the notice, the Agency is required to publish the Secretary' comments and the Administrator's response with the notice. FIFRA also requires the Administrator to submit Section 6 notices to a Scientific Advisory Panel for comment on the impact of the proposed action on health and the environment, at the same time and under the same procedures as those described above for review by the Secretary of Agriculture (Section 25(d)).

Although not required to do so under the statute, the Agency has decided that it is consistent with the general theme of the RPAR process and the Agency's overall policy of open decision making to afford registrants and other interested persons an opportunity to comment on the bases for the proposed action during the time that the proposed action is under review by the Secretary of Agriculture and the Scientific Advisory Panel. Accordingly, appropriate steps will be taken to make copies of the Position Document available to registrants and other interested persons at the time the decision documents are transmitted for formal external review, through publication of a notice of availability in the Federal Register or by other means. Registrants and other interested person will be allowed the same period of time to comment—30 days—that the statute provides for receipt of comments from the Secretary of Agriculture and the Scientific Advisory Panel.

After completing these external review procedures and making any changes in the proposed action which are deemed appropriate as a result of the comments received, the Agency will proceed to implement the desired regulatory action by preparing appropriate documents and releasing them in the manner prescribed by the statute and by the Agency's rules.

III. Determination and Initiation of Regulatory Action

The Agency has considered information on the risks associated with the use of lindane including information submitted by registrants and other interested persons in rebuttal to the lindane RPAR. The Agency has also considered information on the social, economic, and environmental benefits of the uses of lindane subject to the RPAR, including benefits information submitted by registrants and other interested persons in conjunction with their rebuttal submissions, and information submitted by the United States Department of Agriculture.

The Agency's assessment of the risks and benefits of the uses of lindane subject to this RPAR, its conclusions and determinations whether any uses of lindane pose unreasonable adverse effects on the environment, and its determinations whether modifications in terms or conditions of registration reduce risks sufficiently to eliminate any unreasonable adverse effects are set forth in detail in the Position Document. This Position Document is hereby adopted by the Agency as its statement of reasons for the determinations and actions announced in this Notice and as its analysis of the impacts of the proposed regulatory actions on the agricultural economy. For the reasons summarized below and developed in detail in the Position Document, the Determinations of the Agency with respect to lindane are as follows:

A. Determinations of Risk

The lindane RPAR was based on information indicating that lindane posed the following risks to humans or the environment (1) oncogenicity, (2) reproductive and fetotoxic effects and (3) acute effects to aquatic organisms. As developed fully in the Position Document (PD⅔), the Agency has determined that the information submitted to rebut the risk criteria for oncogenicity was insufficient to overcome the presumption against lindane for this effect. In addition, the National Cancer Institute bioassay on lindane, a study which was unavailable when the RPAR was issued, indicates that lindane produces tumors in the livers of animals treated with lindane.

The Agency has also determined that the rebuttal submissions were not only insufficient to remove the Agency's concern that lindane poses the risks of reproductive and fetotoxic effects to humans, but rather that the data submitted adds to the Agency's concern. The fetotoxic and reproductive effects produced by lindane in test animals included an increase in the stillbirth rate and adverse effects on the reproductive performance of the test animals as well as on the condition and/or survival of the fetus.

The Agency did not receive any rebuttal information demonstrating that lindane did not pose acute hazards to aquatic organisms. However, the Agency, in reviewing registration files, did not find any currently registered products which bear label directions for direct application to aquatic areas. Accordingly, in view of the absence of lindane products registered for direct aquatic application, the presumption on the basis of acute hazards to aquatic organisms is hereby withdrawn.

The Agency also received comments on the effects of (1) mutagenicity (2) blood dycrasias, (3) acute hazards to humans and domestic animals and (4) population reduction in non-target avian species. Information was also reviewed on the potential for the isomerization of lindane to the alpha and beta isomers of BHC. After reviewing the data, the Agency has concluded that (1) the existing data does not meet or exceed the risk criterion for mutagenicity although the positive mutagenic responses observed in several studies reinforce the Agency's oncogenicity presumption; (2) there is insufficient epidemiologic evidence to firmly establish a cause-effect relationship between lindane and blood dyscrasias in humans, although the Agency remains concerned that the hematopoietic tissues of certain individuals, particularly children, may be particularly sensitive to lindane; (3) the information on acute hazards to humans received during the rebuttal process does not mitigate the Agency concern (even though the risk may not meet the acute toxicity presumption) in view of the fact that exposure to lindane in both test animals and humans can cause adverse acute effects and that children may be especially sensitive to these effects; and (4) there is insufficient evidence to initiate a rebuttable presumption on the basis of possible population reduction in nontarget avian species. On the issue of isomerization the Agency has concluded that microbial isomerization is not significant and that isomerization of lindane does not take place to any appreciable extent in plants and animals

The risks of oncogenicity, and reproductive and fetotoxic effects are posed to applicators, who may be exposed to lindane before or during application both dermally and via inhalation, as well as to inhabitants of homes or structures treated with lindane or to individuals whose pets are treated with lindane. These individuals are subject primarily to inhalation exposure, although dermal exposure is relevant for certain use patterns. In addition, the risk of acute toxic effects and blood dyscrasias is also of concern, particularly for children, who may display a greater sensitivity than adults to these effects. These effects are of sufficient magnitude to require the Agency to determine whether the uses of lindane offer offsetting social, economic, or environmental benefits.

B. Determinations on Benefits

The uses of lindane which are subject to this RPAR include the following classes of use sites: (1) hardwood logs and lumber, (2) seed treatments, (3) avocados, (4) ornamentals (homeowner use and commercial use), (5) cucurbits, (6) Christmas trees, (7) pecans, (8) forestry, (9) livestock, (10) existing structures, (11) pineapples, (12) pet uses, (13) household uses, and (14) minor uses.

1. Hardwood Logs and Lumber

Lindane is registerd for control of bark beetles and woodboring insects on logs and lumber. Data are unavailable on the extent to which lindane is actually used to treat limber in sawmills; estimates developed by the Agency indicate that as much as 80% of the hardwood lumber produced in the U.S. may be treated with lindane. Usage on hardwood logs was not estimated because of the unavailability of data. There are no registered chemical alternatives for control of pests of main economic importance on green lumber, namely ambrosia beetles or flatheaded and roundheaded borers; copper naphthenate is registered for control of powderpost beetles on lumber and pentachlorophenol (PCP) is registered to control wood-boring beetles on logs and powerpost and lyctus beetles on lumber. For the most economically important hardwoods, there are no non-chemical control methods which do not reduce the lumber quality to below marketable levels. For other hardwoods, there are non-chemical methods including kiln-drying, and "end-racking" (rapid no-heat curing), although these methods do generally reduce lumber quality, and kiln drying is a high cost alternative. Cancellation of lindane use on hardwood logs and lumber would result in an estimated $147 million industry. The Agency expects that the impacts of cancellation would be moderated by the proposed two-year phaseout period, during which time an effective alternative to lindane can be developed. The Agency has some information which indicates that chlorpyrifos, which has been registered for use on live trees in forests, has biological activity similar to that of lindane and may provide adequate control for insect pests found in hardwood logs and lumber.

2. Seed Treatment

Lindane is registered as a seed treatment for small grains (wheat, barley, oats, and rye), corn, and other crops such as sorghum and a number of vegetables. Most of the lindane used for seed treatment (96%) is used in small grains (81%) and corn (15%). Lindane seed treatments are made primarily as insurance against potential damage from wireworms, seedcorn beetles and seedcorn maggots, sporadic pests which cause non-germination of seeds or weak seedlings. Viable alternatives, including diazinon and chlorpyrifos, are available for seed treatment of corn, with diazinon treatment costing only approximately $.05 more per acre than treatment with lindane; other alternatives are available for pre-plant soil application to control the soil insect complex in corn. For small grains, there are no viable registered alternatives to lindane seed treatment, with the exception of heptachlor, which is being phased out by the Final Order of the Administration in the Chlordane/Heptachlor Cancellation (signed March 6, 1978), and will be cancelled for use on grains and corn effective September 2, 1982.

The efficacy of lindane seed treatments at low to moderate levels of infestation has been demonstrated in numerous studies for a variety of crops including small grains and corn, under

heavy infestation of wireworms, however, lindane is not effective in achieving complete control. Very little biological information is available to allow a quantitative estimation of the economic impacts of the cancellation of lindane for seed treatment on small grains, lentils, and dry peas.

The aggregate user costs for the cancellation of lindane on corn seed are estimated at $690,000 per year, taking into account both increased chemical costs and production losses. The very low level of production losses anticipated (less than .003 percent) is not expected to result in economic impacts at the market or consumer level.

For small grains, there are no alternative chemicals available other than heptachlor for wireworm control, and sporadic yield losses may result (in some cases fields may be replanted at a cost of about $12.00 per acre; yield losses may also, however, be experienced by the replanted fields). Thus, economic impacts may result, particularly in North Dakota, Idaho, and Minnesota, where wireworm infestations are most severe and where 50 percent of spring acreage is planted with lindane-treated seed. The Agency does not have any data available to estimate the likelihood or magnitude of any significant production losses, or any consequent market impacts.

No alternatives are available on lentils and dry peas, crops which are commercially produced only in Idaho and Washington. About 85% of lentil acreage and 100% of dry pea acreage were planted with lindane-treated seed as insurance against wireworm damage (representing 3% of the seed treatment use of lindane). No data are available to estimate the economic impacts which may occur if lindane is cancelled for this use.

3. Avocados

Lindane is used on about 90% of the avocado crop in Florida to control mirids and webbingworms. There are no registered chemicals or effective non-chemical controls for mirid control; parathion is a viable alternative for webbingworm control. Preliminary results of a nearly completed study indicate that acephate and permethrin, neither of which are currently registered for use on avocados, are effective for mirid control on avocados. Permethrin appears to have residual effects similar to those of lindane, while the residual effectiveness of acephate is reportedly much shorter. Insufficient data is available to quantitatively evaluate fruit loss (downgrading or complete loss due to fruit drop) resulting from mirid damage if lindane is unavailable. State experts estimate a possible loss of 70 to 80 percent of the Florida avocado crop, with a loss of early varieties approaching 100 percent. These losses would result in potential production losses of $8.7 million, assuming no change in grading standards. A relaxation of the grading standards would reduce the proportion of the loss attributable to cosmetic damage from mirids. No substantial economic impacts are aniticipated if lindane is cancelled for webbingworm control, since parathion is available as a viable alternative at a comparable cost.

4. Ornamentals

Lindane is registered for both homeowner and commercial use on a variety of woody ornamentals and floral and foliage plants to control primarily borers, thrips, and leafminers. Estimates of usage range from 3580 pounds to 74,840 pounds annually. Lindane is the only pesticide currently registered for control of all borer species on all woody ornamentals; chlorpyrifos and endosulfan are registered for borer control on selected species or ornamentals. Alternative pesticides are generally available for the pests of floral and foliage plants. The unavailability of data prevented the development of a precise quantitative analysis of the impact of lindane cancellation for this use. Estimates based on state information indicate that the total impact on the woody ornamental industry could total $20.6 million dollars. Impacts on the floral and foliage industry are expected to be minor.

5. Cucurbits

Lindane is registered for control of various insect pests on cucurbits. Lindane treatment is used on only 12% of America's fresh market cucurbits. Data concerning lindane usage on cucurbits are available from Florida, Georgia and South Carolina. Approximately 22% of the total cucurbit acreage of these states is treated with lindane, this represents 12.2% of fresh market cucumber and squash acreage in the U.S.

Pickleworms and squash vine borers are the major target insects on cucumbers and squash; seventeen pesticides other than lindane are registered for use against these pests. The Agency evaluated the economic impact of lindane cancellation, assuming that certain state selected chemical alternatives would replace lindane, and concluded that the estimated impact on cucurbit growers is minor ($176,000), assuming no anticipated yield loss with the use of chemical alternatives. No overall change in the U.S. production of cucurbits is expected if lindane is cancelled.

6. Christmas Trees

Lindane is used to control five major pests on Christmas trees. No data are available to allow an accurate determination of the percentage of Christmas trees treated or the amount of lindane used on Christmas trees. Both chemical and non-chemical alternatives are available to control most of the major insect pests. Although precise estimates of the impacts of cancellation could not be developed, no major impacts are expected if lindane is cancelled for use on Christmas trees.

7. Pecans

Lindane is used on bearing and non-bearing pecan trees in at least 7 states. (Alabama, Mississippi, Arkansas, Georgia, Louisiana, Oklahoma, and Texas). Approximately 33,000 pounds of lindane are used annually to treat 76% of the U.S. production. Alternative chemicals include endosulfan, which would decrease insect control costs, and oil and malathon, which would increase control costs. Endsulfan is considered to be as effective as lindane, and no yield losses are anticipated if endosulfan entirely replaces lindane. Since endosulfan is registered for pecans under FIFRA 24(c) (state registration) in Mississippi and Louisiana, and has Federal registration for other crops, the Agency believes that endosulfan is a viable alternative for lindane, and would become, in most instances, the alternative of choice. If endosulfan were federally registered or if other states granted 24(c) registrations, the impact of lindane's cancellation would be negligible. If endosulfan does not become more widely available, and lindane is replaced with the currently registered pesticides selected by state experts in the impacted states, the overall loss to growers from increased costs and yield declines could be around $1.4 million.

8. Forestry

Lindane is used in forests to control several types of beetles which attack pines and conifers. However, lindane is not widely use and a variety of chemical alternatives are presently registered; non-chemical control methods are also used to guard against infestation and are effective to suppress all but severe infestations.

Use of lindane in forestry is centered in the South with approximately 1700 pounds used in the entire U.S. for forestry purposes. Impacts from cancellation would occur primarily in the South because cooler northern

forests have less severe insect problems. Quantitative impacts of cancellation were not made because of the lack of data. However, with the availability of chemical and non-chemical alternatives, impacts of cancellation are expected to be slight.

9. Livestock

Lindane is registered for control of pests (fleas, lice, ticks, mites, etc.) on livestock (beef cattle, hogs, sheep, goats and horses). The use of lindane has flucated yearly, but has shown a distinct overall decline in the 5 year period ending with 1976, with a total of 176,000 pounds used in that year. Efficacious alternative chemicals are available for the major livestock class/pest combinations except for mite control where alternatives, if available, are not as effective as lindane and could lead to genetically induced resistance as a result of multiple applications. Economic impacts of cancellation are expected to be minor with a total increase in pest control costs of $1.08 million ($0.08 per animal treated). No effect on production yield or quality is expected and no significant market impacts are anticipated unless mites become an endemic problem in a herd.

10. Existing Structures

Lindane is used to spot-treat existing structures, mainly houses, for wood-boring beetles and dry-wood termites. Less than 1,000 pounds is used annually on 10,000 or 12,000 houses. Several chemical alternatives are registered for use on structures, including pentachlorophenol (PCP), an effective and economically competitive alternative to lindane. In addition, infestation can be prevented, and presumably retarded, by the use of painted or otherwise finished wood. Wood that is structurally damaged can be replaced with sound wood, which can be painted or finished to prevent future infestation.

The economic impact of cancelling the structural use of lindane is likely to be extremely slight, in view of the availability of chemical and non-chemical alternatives, and the slow spread of powder-post beetle infestations.

11. Pineapples

Lindane is used in Hawaiian pineapple production in conjunction with soil fumigants to help control symphylids, root-feeding insects which attack pineapple roots soon after planting. Lindane is used primarily as additional protection to compensate for adverse soil condition and late infestations. Annual use of lindane on Hawaiian pineapples ranges from 18,000 to 48,000 pounds; lindane is applied on about 72% of the annually planted acreage and about 22% of total pineapple acreage. Alternative methods of control include various soil fumigants which, although primarily for nematode control, give some assistance in controlling symphylids; these chemicals, however, do not have residual action and offer no protection against possible late infestations.

The value of lindane for symphylid control is difficult to determine, as insufficient data is available on the effectiveness of lindane and the probablity of late symphylid infestation. If lindane were unavailable, the estimated annual crop impact is around $515,000 based on anticipated crop losses. No consumer impacts are expected because foreign supplies are presently available, and price impacts from the annual crop loss would be negligible.

12. Pets

Lindane is registered for control of ticks, fleas, lice and mites on dogs, cats, and their premises. Registered products include anti-flea cat collars, dog wash, dog shampoo, and dog dust. Approximately 30,000 pounds of lindane are used annually to treat pets for parasite problems, including scabies (mange)-cuasing mites. Alternative chemicals are registered for control of insect pests on cats and dogs; none of the alternatives are reportedly effective against scabies-causing mites. Several preventive, non-chemical methods also help control parasites which attack pets.

The economic impact would be insignificant if lindane is cancelled for pet use, as the alternatives are generally in the same price range as lindane.

13. Household Uses

Lindane is used in the houshold in shelfpaper, floor wax, household insect sprays and smoke-fumigation devices to control a variety of pests. An estimated 31,000 pounds of lindane are used annually in household applications. Alternative chemical are available for controlling all of the insects controlled by lindane. No economic impact is expected from cancellation of lindane for household uses.

14. Minor Uses

There are numerous minor uses of lindane including moth spray for industrial use; insect spray in uninhabited buildings, and empty storage bin fog spray. The Agency received no responses from registrants or user groups in response to its request for benefits information on the enumerated, or any other, minor uses. In the absence of information, the Agency has assumed that benefits are negligible for the minor uses of lindane.

C. Determinations of Unreasonable Adverse Effects

For the reasons set forth in detail in the accompanying Position Document, the Agency has made the following unreasonable adverse effect determinations about the uses of lindane.

The Agency has determined that the risks arising from the use of lindane are greater than the social, economic, and environmental benefits of lindane for use in hardwood logs and lumber, seed treatment, avocados, ornamentals (homeowner use), cucurbits, Christman trees, pecans, forestry, structures, flea collars, dog dusts, dog shampoos, household uses and minor uses, and that risk reduction measures cannot reduce the risk to an acceptable level for these uses. Accordingly, the Agency is proposing to initiate action to cancel or deny registrations for all the above enumerated uses outright, with the allowance for the hardwood log and lumber uses of a two-year phase out period with stronger label restrictions during this interim period. The Agency has determined that the cancellation or denial of registration of these uses of lindane will not have a significant impact on the production and prices of agricultural commodities, retail food prices and otherwise on the agricultural economy.

The Agency has further determined that the risks of lindane arising from use on ornamentals (commercial use), livestock, pineapples and dog washes are greater than the social, economic, and environmental benefits of these uses unless risk reductions are accomplished by modifications in the terms and conditions of registration. Accordingly, the Agency is proposing to initiate action to cancel or deny registration for ornamentals (commercial use), livestock, pineapples and dog washes unless the terms and conditions of registration are modified. These modifications include a specified label warning to users, women and parents for ornamentals, livestock, pineapples and dog washes. Additional label modifications for ornamentals (commercial use), livestock and dog washes include the following:

(1) The classification of lindane as a restricted use pesticide

(2) The requirement of protective clothing for applicators.

The Agency has further determined that these modifications in the terms and conditions of registration

accomplish significant risk reductions and that these risk reductions can be achieved without significant impacts on the benefits of the uses. These stricter label requirements will not have a significant impact on production and prices of agricultural commodities, retail food prices, or otherwise on the agricultural economy. The Agency has determined that, unless these changes in the terms or conditions of registration are accomplished, the uses of lindane on ornamentals, livestock, pineapple and dog washes will generally cause unreasonable adverse effects on the environment, when used in accordance with widespread and commonly recognized practices, and that the labeling of lindane pesticide products will no comply with the provisions of FIFRA.

D. Initiation of Regulatory Action

Based upon the determinations summarized above and set out in detail in the Position Document, the Agency is proposing to initiate the following regulatory actions:

1. Cancellation and denial of registration of lindane products for use in seed treatment, avocados, ornamentals (homeowner use), cucrbits, christmas trees, pecans, forestry, structures, flea collars, dog dusts, dog shampoo, household uses and minor uses.

2. Cancellation and denial of registration of lindane products for use on hardwood logs and lumber with a 2-year phase-out period. During the 2-year phase out period, in order to avoid cancellation, the registrants or applicants for registration must modify the labeling of lindane products to include the following:

Warning Label

The United States Environmental Protection Agency has determined that lindane causes cancer and fetotoxic effects in laboratory animals, and central nervous system effects in both humans and laboratory animals.

Users: Because lindane is highly toxic, extreme care should be exercised in handling this product. Use of this product is limited to certified applicators only. Users are required to wear all recommended protective clothing. Protective clothing should be laundered separately, and all users should shower thoroughly after handling this product.

Women: Women of child-bearing age should not be involved in the mixing, loading, or application of this product. Exposure to lindane during pregnancy must be avoided.

Parents: Children are very sensitive to the toxic effects of this pesticide. Avoid use in areas where children might be exposed.

Restricted Use Pesticide

For retail sale to and use only by certified applicators or by persons under their direct supervision and only for those uses covered by the certified applicators certification.

Required Clothing and Equipment for Application

Applicators must wear the following impermeable protective clothing:

a. Neoprene aprons
b. Neoprene boots
c. Elbow-length neoprene gloves

3. Cancellation and denial of registrations of lindane products for use in pineapples unless the registrants or applicants for registration modify the labeling of lindane products to include the following:

Warning Label

The United States Environmental Protection Agency has determined that lindane causes cancer and fetotoxic effects in laboratory animals, and central nervous system effects in both humans and laboratory animals.

Users: Because lindane is highly toxic, extreme care should be exercised in handling this product.

Women: Women of child-bearing age should not be involved in the mixing, loading, or application of this product. Exposure to lindane during pregnancy must be avoided.

Parents: Children are very sensitive to the toxic effects of this pesticide. Avoid use in areas where children might be exposed.

4. Cancellation and denial of registrations of lindane products for use in ornamentals (commercial use) unless the registrants or applicants for registration modify the labeling of lindane products to include the following:

Warning Label

The United States Environmental Protection Agency has determined that lindane causes cancer and fetotoxic effects in laboratory animals, and central nervous effects in both humans and laboratory animals.

Users: Because lindane is highly toxic, extreme care should be exercised in handling this product. Use of this product is limited to certified applicators only. Users are required to wear all recommended protective clothing. Protective clothing should be laundered separately, and all users should shower thoroughly after handling this product.

Women: Women of child-bearing age should not be involved in the mixing, loading, or application of this product. Exposure to lindane during pregnancy must be avoided.

Parents: Children are very sensitive to the toxic effects of this pesticide. Avoid use in areas where children might be exposed.

Restricted Use Pesticide

For retail sale to and use only by certified applicators or by persons under their direct supervision and only for these uses covered by the certified applicators certification.

Protective Clothing and Equipment

Commercial applicators must wear protective clothing (long-sleeved work shirts and long pants), elbow-length impermeable (neoprene) gloves and a respirator.

5. Cancellation and denial of registrations of lindane products for use on livestock, unless the registrants or applicants for registration modify the labeling of lindane products to include the following:

Warning Labels

The United States Environmental Protection Agency has determined that lindane causes cancer and fetotoxic effects in laboratory animals, and central nervous effects in both humans and laboratory animals.

Users: Because lindane is highly toxic, extreme care should be exercised in handling this product. Use of this product is limited to certified applicators only. Users are required to wear all recommended protective clothing. Protective clothing should be laundered separately, and all users should shower thoroughly after handling this product. Do not use lindane products on pregnant or young animals.

Women: Women of child-bearing age should not be involved in the mixing, loading, or application of this product. Exposure to lindane during pregnancy must be avoided.

Parents: Children are very sensitive to the toxic effects of this pesticide. Avoid use in areas where children might be exposed.

Restricted Use Pesticide

For retail sale to and use only by certified applicators or by persons under their direct supervision and only for those uses covered by the certified applicators certification.

Protective Clothing and Equipment

Applicators must wear the following protective clothing:

a. Long-sleeved work shirts and long pants.

b. Elbow-length impermeable (neoprene) gloves
c. Neoprene aprons
d. Neoprene boots

6. Cancellation and denial of registrations of lindane products for use as a dog wash unless the registrants or applicants for registration modify the labeling of lindane products to include the following:

Warning Labels

The United States Environmental Protection Agency has determined that lindane causes cancer and fetotoxic effects in laboratory animals, and central nervous effects in both humans and laboratory animals.

Users: Because lindane is highly toxic, extreme care should be exercised in handling this product. Use of this product is limited to certified applicators only. Users are required to wear all recommended protective clothing. Protective clothing should be laundered separately, and all users should shower thoroughly after handling this product. Do not use lindane products on pregnant or young animals.

Women: Women of child-bearing age should not be involved in the mixing, loading, or application of this product. Exposure to lindane during pregnancy must be avoided.

Parents: Children are very sensitive to the toxic effects of this pesticide. Avoid use in areas where children might be exposed.

Restrictive Use Pesticide

For veterinary applications only. For retail sale to and use only by certified applicators or by persons under their direct supervision and only for those uses covered by the certified applicators certification.

Protective Clothing and Equipment

Veterinarian applicators will be required to wear the following protective clothing:

a. Long-sleeved work shirts and long pants
b. Elbow-length impermeable (neoprene) gloves
c. Neoprene aprons

IV. Procedural Matters

This Preliminary Notice of Determination notifies the United States Department of Agriculture, the Scientific Advisory Panel, pesticide registrants and users, and other interested parties of the Agency's preliminary determinations relating to the risks and benefits of the uses of lindane and provides these entities and individuals with the opportunity to comment on these determinations.

As discussed in Section II of this Notice, the Agency's decision to initiate the regulatory action described in Section III must be referred for review by the Secretary of Agriculture and the Scientific Advisory Panel. The EPA position document setting forth in detail the reasons and factual bases for the regulatory actions which the Agency proposes and this Notice of Determination are being transmitted immediately to the Secretary of Agriculture and the Scientific Advisory Panel for comments. The Agency also will offer registrants and other interested persons an opportunity to comment on the bases for the Agency's action by making copies of the Position Document available upon request. Interested persons may receive copies of the documents by communicating their requests to Richard Troast, Project Manager, Special Pesticide Review Division, Office of Pesticide Programs, EPA (TS-791), Room 711 E, Crystal Mall II, 1921 Jefferson Davis Highway, Arlington, Virginia 22202, (703) 557-7420. Registrants and other interested persons have the same period of 30 days to submit comments that the statute provides for comments from the Secretary of Agriculture and the Scientific Advisory Panel.

All comments on the proposed actions should be sent to the Document Control Office, Chemical Information Division, EPA (TS-793), Room E-447, 401 M Street S.W., Washington, D.C. 20460. In order to facilitate the work of the Agency and of others inspecting the comments, registrants and other interested persons should submit three copies of their comments. The comments should bear the identifying notation 30000/10C and should be submitted on or before August 4, 1980.

After completion of these review procedures, the Agency will consider the comments received and publish an analysis of them, together with any changes in the regulatory actions announced in this Notice which it determines are appropriate. Until this final review phase is concluded in this manner, it is not necessary for registrants or other interested persons to request a hearing to contest any regulatory action resulting from the conclusion of this RPAR.

Dated: June 25, 1980.

Steven D. Jellinek,

Assistant Administrator for Pesticides & Toxic Substances.

[FR Doc. 80-20008 Filed 7-2-80; 8:45 am]
BILLING CODE 6560-01-M

[FRL 1530-8]

Wastewater Treatment Facilities in Las Cruces, N. Mex.; Intent To Prepare and Environmental Impact Statement

AGENCY: U.S. Environmental Protection Agency (EPA), Region 6.

ACTION: Notice of intent to prepare a draft environmental impact statement (EIS).

PURPOSE: In accordance with Section 102(2)(C) of the National Environmental Policy Act, EPA has identified a need to prepare an EIS and therefore publishes this Notice of Intent pursuant to 40 CFR 1501.7.

FOR FURTHER INFORMATION CONTACT: Mr. Clinton B. Spotts, Regional EIS Coordinator, USEPA, Region 6, 1201 Elm Street, Dallas, Texas 75270, Telephone: (Commercial) (214) 767-2716, (FTS) 8-729-2716.

SUMMARY: 1. *Description of Proposed Action:* The EPA action would be the approval of a facility plan and the awarding of additional Federal grant monies pursuant to Section 201 of the Clean Water Act for the design and construction of wastewater treatment facilities improvements in Las Cruces, Dona Ana County, New Mexico. The city of Las Cruces has received a grant (C-35-1082-01) from EPA to conduct the preliminary planning and evaluation of alternatives. The grant also covers the preparation of the EIS under an agreement between EPA and the city of Las Cruces. The EIS will be prepared using the "piggyback" approach whereby an environmental consultant, separate from the engineering consultant, will perform the environmental impact evaluation. EPA will have the final responsibility for the content of the EIS.

2. *Public and Private Participation in the EIS Process:* Full participation by interested local, State and Federal agencies as well as other interested groups or individuals is invited. The public will be involved to the maximum extent possible and is encouraged to participate in the planning process.

3. *Issues:* Significant issues identified to date include:

(1) Impacts on environmentally significant agricultural land.
(2) Changes in land use concentrations or distributions.
(3) Impacts of induced development on ambient air quality.
(4) Impacts on groundwater.
(5) Odors.

Other issues to be considered include alternatives involving treatment plant location (if appropriate), wastewater treatment process, effluent disposal

method and sludge disposal method; and impacts on surface water quality, biological resources, socioeconomic, public health, cultural resources, etc.

4. *Scoping:* EPA, Region 6, will hold a public meeting to further identify significant environmental issues and help determine the scope of the EIS at 7:00 p.m., on July 31, 1980, in the City Commission Chambers, Las Cruces City Hall, 200 North Church Street, Las Cruces, New Mexico. Additional public meetings will be held by the grantee at key points during the planning process.

5. *Timing:* EPA estimates the EIS will be available for public review around October 1981.

6. *Requests for Copies of Draft EIS:* All interested parties are encouraged to submit their name and address to the person indicated above for inclusion on the distribution list of the draft EIS.

Dated: June 26, 1980.

William N. Hedeman, Jr.,

Director, Office of Environmental Review (A-104).

[FR Doc. 80-20011 Filed 7-2-80; 8:45 am]

BILLING CODE 6560-01-M

[FRL 1531-1]

Jewett Mine and Limestone Electric Generating Station; Intent To Prepare an Environmental Impact Statement

AGENCY: U.S. Environmental Protection Agency (EPA).

ACTION: Notice of intent to prepare an environmental impact statement (EIS) on the Jewett Mine and Limestone Electric Generating Station.

PURPOSE: To fulfill the requirements of Section 102(2)(C) of the National Environmental Policy Act, EPA has identified a need to prepare an EIS and therefore issues this Notice of Intent pursuant to 40 CFR 1501.7.

FOR FURTHER INFORMATION CONTACT: Mr. Clinton B. Spotts, Regional EIS Coordinator, USEPA, Region 6, 1201 Elm Street, Dallas, Texas 75270, Telephone: (Commercial) 214-767-2716, (FTS) 729-2716.

SUMMARY:

Description of Proposed Action

Pursuant to Environmental Protection Agency (EPA) regulations for New Source NPDES Permits and the preparation of Environmental Impact Statements (40 CFR Part 6), EPA is preparing a Draft Environmental Impact Statement for wastewater discharges from the Jewett Mine and the Limestone Electrical Generating Station located in portions of Limestone, Freestone and Leon Counties in Texas.

The 40,000 acre mine area is owned by Northwestern Resources Co. Eight million tons of lignite will be mined yearly, for a period of thirty years, resulting in a total mining output of 240 million tons of lignite. The electrical generating station will be constructed and operated by Houston Lighting and Power Company and will contain two 750 MW generating units fueled by lignite from the mine. The project will also encompass associated transmission lines and railroad spurs.

Public and Private Participation in the EIS Process

EPA invites full participation by individuals, private organizations, and local, State and Federal agencies. EPA will involve and encourage the public to participate in the planning process to the maximum extent possible.

The EIS will include an analysis of the following significant issues:

a. The socioeconomic impact of the in-migration of workers and their families.

b. The effect of power plant emissions on the existing air quality.

c. The effect of fugitive dust emissions from mining and construction activities.

d. The effect of mining activity on the hydrology of aquifers located above and below the lignite.

e. The effect of water usage by the project on the quantity of water available in the area.

f. The effect of proposed diversions and channelizations of creeks in the project area.

g. The effect of effluent discharges on the quality of water in receiving streams and rivers.

h. The effect of the project on the identified wetlands areas, one of which may be designated as a Natural Landmark.

i. The effect on the aquatic environment of locating an intake structure on Lake Limestone.

j. The effects on potentially endangered species of animals and/or their habitats.

k. The impact of the proposed project on the aesthetics of the area and interference with recreational activities.

l. The possible effects of the project on archeological and historical sites in the area.

m. The effect of converting current land use to mining activity.

n. The effect of mine and plant operation on the ambient noise environment.

o. The effect of post-mining reclamation of disturbed lands and their capability to support beneficial uses.

p. The benefits to the economy of surrounding communities.

Scoping

EPA, Region 6, will conduct a public meeting to discuss the scope of the Environmental Impact Statement including a range of actions, alternatives, and environmental impacts. The scoping meeting will be held at Mexia High School, 1120 Ross Avenue, Mexia, Texas, on August 7, 1980, at 7:30 p.m.

Timing

EPA estimates the draft EIS will be available for public review and comment around December 1980.

Requests for Copies of Draft EIS

Anyone who wants a copy of the Draft Environmental Impact Statement or notification of hearings should submit their name and address to Clinton Spotts at the above address.

Dated: June 26, 1980.

William N. Hedeman, Jr.,

Director, Office of Environmental Review (A-104).

[FR Doc. 80-20010 Filed 7-2-80; 8:45 am]

BILLING CODE 6560-01-M

FEDERAL COMMUNICATIONS COMMISSION

[Report No. A-15]

AM Broadcast Applications Accepted for Filing and Notification of Cutoff Date

Released: June 26, 1980.

Cutoff Date: August 1, 1980.

Notice is hereby given that the applications listed in the attached appendix are hereby accepted for filing. They will be considered to be ready and available for processing after August 1, 1980. An application, in order to be considered with any other application appearing on the attached list or with any other application on file by the close of business on August 1, 1980, which involves a conflict necessitating a hearing wiht any application on this list, must be substantially complete and tendered for filing at the offices of the Commission in Washington, D.C., not later than the close of business on August 1, 1980. Petitions to deny any application on this list must be on file with the Commission not later than the close of business on August 1, 1980.

Federal Communications Commission.

William J. Tricarico,

Secretary.

BP-781204AL—New, Homer City, Pennsylvania, Ridge Communications, Inc., Req: 1520 kHz, 500 W, DA-D

BP-790509AG—KFIA, Carmichael, California, Olympic Broadcasters, Inc., Has: 710 kHz, 250 W, DA-1, U, Req: 710 kHz, 250 W, 1kW-LS, DA-2, U

BP-790531AG—New, Lajas, Puerto Rico, Professional Radio Broadcasting Corporation, Req: 1510 kHz, 1kW, DA-1, U
BP-790810AE—WCLN, Clinton, North Carolina, Sampson Broadcasting Company, Inc., Has: 1170 kHz, D, Req: 1170 kHz, 5kW (1kW-CH), D
BP-790817AD—WJJJ, Christianburg, Virginia, Blacksburg-Christianburg Broadcasting Co., Inc., Has: 1260 kHz, 1kW, D, Req: 1260 kHz, 2.5kW, D,
BP-790822AC—New, Bountiful, Utah, General Broadcasting, Inc., Req: 680 kHz, 1kW, D
BP-790924AD—New, Troy, Pennsylvania, Joel Clawson, Req: 1310 kHz, 500 W, D
BP-791010AG—New, Poultney, Vermont, Vermont-N.Y. Broadcasting Corporation, Req: 1340 kHz, 250W, U
BP-791019AF—KNEM, Nevada, Missouri, Kesler Broadcasting Co., Inc., Has: 1240 kHz, 250W, U, Req: 1240 kHz, 250W, 1kW-LS, U
BP-791029AD—New, Willmar, Minnesota, Kandi Broadcasting, Inc., Req: 1590 kHz, 1kW, DA-D
BP-791031AC—WDNY, Dansville, New York, Dansville Broadcasting Company, Has: 1600 kHz, 500W, D, Req: 1400 kHz, 250W, 1kW-LS, U
BP-791116AA—WKMB, Stirling, New Jersey, K & M Broadcasters, Inc., Has: 1070 kHz, 250W, D, Req: 1070 kHz, 2.5kW, DA-D
BP-800331AI—WEBB, Baltimore, Maryland, Brunson Broadcasting Co. of Maryland, Inc., Has: 1360 kHz, 5kW, DA-D, Req: 1360 kHz, 5kW, DA-2, U

[FR Doc. 80-20021 Filed 7-2-80; 8:45 am]
BILLING CODE 6712-01-M

AM Broadcast Applications Accepted for Filing and Notification of Cutoff Date

[Report No. B-3]

Released: June 27, 1980.
Cutoff date: August 3, 1980.

Notice is hereby given that the following applications are accepted for filing. Because they are in conflict with applications previously accepted for filing and listed as subject to cut-off dates for conflicting applications, no application which would be in conflict with these applications will be accepted for filing.

Petitions to deny these applications must be on file with the Commission not later than the close of business on August 3, 1980.

Minor amendments to these applications, and to the applications previously accepted for filing and in conflict with these applications, may be filed as a matter of right not later than the close of business on August 3, 1980. Amendments filed pursuant to this notice are subject to the provisions of § 73.3572(b) of the Commission's Rules.

BP-780728AH—NEW, Daphne, Alabama, MBB, Inc., Req: 960kHz, 5 kW, DA, Day
BP-780728AQ—WMOB, Chickasaw, Alabama, Bay Broadcasting Corporation, Has: 840 kHz, 1 kW, Day (Mobile, Alabama), Req: 950 kHz, 500 W, 2.5 kW-LS, DA-N, U
BP-790418AD—NEW, Junction City, Kentucky, Alum Springs Vision and Outreach Corporation, Req: 1170 kHz, 500 W, DA, Day

Federal Communications Commission.
William J. Tricarico,
Secretary.

[FR Doc. 80-20022 Filed 7-2-80; 8:45 am]
BILLING CODE 6712-01-M

FEDERAL EMERGENCY MANAGEMENT AGENCY

Senior Executive Service Performance Review Board; List of Members

AGENCY: Federal Emergency Management Agency.

ACTION: Listing of personnel serving as members of this agency's Senior Executive Service Performance Review Board.

SUMMARY: Pub. L. 95-454 dated October 13, 1978 (Civil Service Reform Act of 1978) requires that Federal agencies publish notification of the appointment of individuals who serve as members of that agency's performance Review Board (PRB). The following is a list of those individuals currently serving as members of this Agency's PRB:

1. Joseph Moreland, Assistant Administrator, U.S. Fire Administration.
2. William Chipman, Deputy Assistant Director for Plans.
3. Frances Dias, Senior Education Program Manager.
4. Rita Meyninger, Regional Director, Region II (New York).
5. Charles Thiel, Assistant Associate Director, Mitigation and Research.
6. Robert Crawford, Manager, Special Programs and Studies.
7. Charles Johnson, Regional Director, Region III (Phildaelphia).
8. Richard Krimm, Assistant Administrator, Flood Insurance.
9. Jack McGraw, Director, Temporary Housing.

FOR FURTHER INFORMATION CONTACT: Mr. Barry Oertel, Office of Personnel, on (703) 235-2464.

Dated: June 27, 1980.
John W. Macy, Jr.,
Director.

[FR Doc. 80-19975 Filed 7-2-80; 8:45 am]
BILLING CODE 6718-01-M

FEDERAL MARITIME COMMISSION

[Docket No. 80-43]

Behring International, Inc., Independent Ocean Freight Forwarder License No. 910; Order of Investigation and Hearing

Behring International, Inc. (Behring), is an independent ocean freight forwarder operating pursuant to FMC License No. 910, issued on February 7, 1964. Information has been developed by the Commission's staff which indicates that Behring may have violated sections 15 and 16, Initial Paragraph, Shipping Act, 1916 (46 U.S.C. 814, 815).

The information indicates Behring and/or its officers apparently received sums of money from ocean carriers in excess of the ocean freight forwarder compensation specified in the ocean carriers' tariffs. These payments from one carrier to a vice president of Behring apparently totaled approximately $27,719 for the period from July 16, 1975 through January 19, 1977, for shipments covered by 179 bills of lading whereon Behring acted as the ocean freight forwarder. The payments were all in excess of the ocean freight forwarder compensation specified in the carrier's respective tariff.

The receipt of payments from ocean carriers in excess of the ocean freight forwarder compensation by Behring and/or its officers raises the possibility that Behring may have violated section 15 and section 16, Initial Paragraph, Shipping Act, 1916. Section 15 may have been violated if the payments were made pursuant to an unfiled agreement between Behring and respective carriers. It is likewise believed that Behring may have violated section 16, Initial Paragraph, by directly or indirectly passing any part of these payments through to its shipper principals and thereby permitting its principals to obtain ocean transportation at less than the applicable rates or charges. Moreover, even if Behring did not pass any or all of the payments on to its shipper clients, if the payments represent a portion of the carrier's ocean freight revenues for Behring shipments, the excess payments may result in such shipments moving at less than the applicable rates and charges.

Now, therefore, it is ordered, That pursuant to sections 15, 16, 22, 32 and 44 (46 U.S.C. 814, 815, 821, 831 and 841(b)) of the Shipping Act, 1916, and section 510.9 of General Order 4 (46 CFR 510.9), a proceeding is hereby instituted to determine:

1. Whether Behring violated section 15, Shipping Act, 1916, by entering into and carrying out without Commission approval any agreement subject to the terms of section 15 providing for the receipt of payments from ocean carriers in excess of the amount of ocean freight forwarder compensation specified in the ocean carrier's applicable tariffs;

2. Whether Behring violated section 16, Initial Paragraph, by directly or indirectly passing on any portion of monies received by it or its officers from ocean carriers in excess of authorized ocean freight forwarder compensation to its shipper principals thus obtaining ocean transportation—on behalf of its principals—at less than the applicable rates or charges;

3. Whether Behring violated section 16, Initial Paragraph—even if it did not pass any or all of monies received by it or its officers from ocean carriers in excess of authorized ocean freight forwarder compensation to its shipper principals—by obtaining transportation by water at less than the applicable rates and charges;

4. Whether civil penalties should be assessed against Behring pursuant to section 32(e), Shipping Act, 1916, for violations of the Shipping Act, 1916, and/or the Commission's Rules and Regulations, and, if so, the amount of any such penalty which should be imposed taking into consideration factors in possible mitigation of such a penalty;

5. Whether Behring's independent ocean freight forwarder license should be suspended or revoked for:

a. willful violations of the Shipping Act, 1916, pursuant to section 44(d) of the Shipping Act, 1916,

b. such conduct as the Commission finds renders Behring unfit to carry on the business of forwarding in accordance with section 510.9(e) of General Order 4.

It is further ordered, That Behring International, Inc. be named Respondent in this proceeding.

It is further ordered, That this proceeding be assigned for public hearing before an Administrative Law Judge of the Commission's Office of Admininstrative Law Judges and that the hearing be held at a date and place to be determined by the Presiding Administrative Law Judge, but in any event, shall commence within the time limits specified in Rule 61 (46 CFR 502.61). The hearing shall include oral testimony and cross-examination in the discretion of the Presiding Officer only upon a proper showing that there are genuine issues of material fact that cannot be resolved on the basis of sworn statements, affidavits, depositions, or other documents, or that the nature of the matters in issue are such that an oral hearing and cross-examination are necessary for the development of an adequate record.

It is further ordered, That notice of this Order be published in the Federal Register and a copy thereof and notice of hearing be served upon Respondent, Behring International, Inc.

It is further ordered, That any person other than Respondent and Hearing Counsel having an interest and desiring to participate in this proceeding shall file a petition for leave to intervene in accordance with Rule 72 (46 CFR 502.72) of the Commission's rules of practice and procedure.

It is further ordered, That all future notices issued by or on behalf of the Commission, including notice of time and place of hearing, or prehearing conference, shall be mailed directly to all parties of record.

By the Commission.

Francis C. Hurney,

Secretary.

[FR Doc. 80-19976 Filed 7-2-80; 8:45 am]

BILLING CODE 6730-01-M

FEDERAL RESERVE SYSTEM

Citizen's National Corp.; Formation of Bank Holding Company

Citizen's National Corp., El Reno, Oklahoma, has applied for the Board's approval under Section 3(a)(1) of the Bank Holding Company Act (12 U.S.C. 1842(a)(1)) to become a bank holding company by acquiring 80 per cent or more of the voting shares of The Citizens National Bank and Trust Company, El Reno, Oklahoma. The factors that are considered in acting on the application are set forth in Section 3(c) of the Act (12 U.S.C. 1842(c)).

The application may be inspected at the offices of the Board of Governors or at the Federal Reserve Bank of Kansas City. Any person wishing to comment on the application should submit views in writing to the Reserve Bank, to be received not later than July 25, 1980. Any comment on an application that requests a hearing must include a statement of why a written presentation would not suffice in lieu of a hearing, identifying specifically any questions of fact that are in dispute and summarizing the evidence that would be presented at a hearing.

Board of Governors of the Federal Reserve System, June 27, 1980.

Cathy L. Petryshyn,

Assistant Secretary of the Board.

[FR Doc. 80-20015 Filed 7-2-80; 8:45 am]

BILLING CODE 6210-01-M

Howland Bancshares, Inc.; Formation of Bank Holding Company

Howland Bancshares, Inc., San Antonio, Texas, has applied for the Board's approval under section 3(a)(1) of the Bank Holding Company Act (12 U.S.C. 1842(a)(1)) to become a bank holding company by acquiring 80 per cent or more of the voting shares of Mercantile Bank and Trust, San Antonio, Texas. The factors that are considered in acting on the application are set forth in section 3(c) of the Act (12 U.S.C. 1842(c)).

The application may be inspected at the Offices of the Board of Governors or at the Federal Reserve Bank of Dallas. Any person wishing to comment on the application should submit views in writing to the Secretary, Board of Governors of the Federal Reserve System, Washington, D.C. 20551 to be received no later than July 25, 1980. Any comment on an application that requests a hearing must include a statement of why a written presentation would not suffice in lieu of a hearing, identifying specifically any questions of fact that are in dispute and summarizing the evidence that would be presented at a hearing.

Board of Governors of the Federal Reserve System, June 27, 1980.

Cathy L. Petryshyn,

Assistant Secretary of the Board.

[FR Doc. 80-20018 Filed 7-2-80; 8:45 am]

BILLING CODE 6210-01-M

Northern Kentucky Bancshares, Inc.; Formation of Bank Holding Company

Northern Kentucky Bancshares, Inc., Milford, Ohio, has applied for the Board's approval under section 3(a)(1) of the Bank Holding Company Act (12 U.S.C. 1842(a)(1)) to become a bank holding company by acquiring 80 per cent or more of the voting shares of The Falmouth Deposit Bank, Falmouth, Kentucky. The factors that are considered in acting on the application are set forth in section 3(c) of the Act (12 U.S.C. 1842(c)).

The application may be inspected at the offices of the Board of Governors or at the Federal Reserve Bank of Cleveland. Any person wishing to comment on the application should submit views in writing to the Reserve Bank, to be received not later than July 25, 1980. Any comment on an application that requests a hearing must include a statement of why a written presentation would not suffice in lieu of a hearing, identifying specifically any questions of fact that are in dispute and summarizing the evidence that would be presented at a hearing.

Board of Governors of the Federal Reserve System, June 26, 1980.

Cathy L. Petryshyn,

Assistant Secretary of the Board.

[FR Doc. 80-20014 Filed 7-2-80; 8:45 am]

BILLING CODE 6210-01-M

Spring Grove Investments, Inc.; Proposed Continuation of Insurance Agency Activities

Spring Grove Investments, Inc., Spring Grove, Minnesota, has applied, pursuant to section 4(c)(8) of the Bank Holding Company Act (12 U.S.C. 1843(c)(8)) and § 225.4(b)(2) of the Board's Regulation Y (12 CFR 225.4(b)(2)), for permission to continue to operate Onsgard State Insurance Agency, Spring Grove, Minnesota.

Applicant states that the agency would continue to engage in general insurance agency activities. These activities would be performed from offices of Applicant's subsidiary bank in Spring Grove, Minnesota, serving an area approximately five miles east and west, and ten miles north and south, of Spring Grove, Minnesota. Such activities have been specified by the Board in § 225.4(a) of Regulation Y as permissible for bank holding companies, subject to Board approval of individual proposals in accordance with the procedures of § 225.4(b).

Interested persons may express their views on the question whether consummation of the proposal can "reasonably be expected to produce benefits to the public, such as greater convenience, increased competition, or gains in efficiency, that outweigh possible adverse effects, such as undue concentration of resources, decreased or unfair competition, conflicts of interests, or unsound banking practices." Any request for a hearing on this question must be accompanied by a statement of the reasons a written presentation would not suffice in lieu of a hearing, identifying specifically any questions of fact that are in dispute, summarizing the evidence that would be presented at a hearing, and indicating how the party commenting would be aggrieved by approval of the proposal.

The application may be inspected at the offices of the Board of Governors or at the Federal Reserve Bank of Minneapolis.

Any views or requests for hearing should be submitted in writing and received by the Secretary, Board of Governors of the Federal Reserve System, Washington, D.C. 20551, not later than July 25, 1980.

Board of Governors of the Federal Reserve System, June 27, 1980.

Cathy L. Petryshyn,

Assistant Secretary of the Board.

[FR Doc. 80-20017 Filed 7-2-80; 8:45 am]

BILLING CODE 6210-01-M

South Holland Bancorp, Inc.; Formation of Bank Holding Company

South Holland Bancorp, Inc., South Holland, Illinois, has applied for the Board's approval under section 3(a)(1) of the Bank Holding Company Act (12 U.S.C. 1842(a)(1)) to become a bank holding company by acquiring 80 per cent or more of the voting shares of South Holland Trust & Savings Bank, South Holland, Illinois. The factors that are considered in acting on the application are set forth in section 3(c) of the Act (12 U.S.C. 1842(c)).

The application may be inspected at the offices of the Board of Governors or at the Federal Reserve Bank of Chicago. Any person wishing to comment on the application should submit views in writing to the Reserve Bank, to be received not later than July 25, 1980. Any comment on an application that requests a hearing must include a statement of why a written presentation would not suffice in lieu of a hearing, identifying specifically any questions of fact that are in dispute and summarizing the evidence that would be presented at a hearing.

Board of Governors of the Federal Reserve System, June 27, 1980.

Cathy L. Petryshyn,

Assistant Secretary of the Board.

[FR Doc. 80-20016 Filed 7-2-80; 8:45 am]

BILLING CODE 6210-01-M

GENERAL ACCOUNTING OFFICE

Regulatory Reports Review; Receipt of Report Proposal

The following request for clearance of a report intended for use in collecting information from the public was received by the Regulatory Reports Review Staff, GAO, on June 26, 1980. See 44 U.S.C. 3512(c) and (d). The purpose of publishing this notice in the Federal Register is to inform the public of such receipt.

The notice includes the title of the request received; the name of the agency sponsoring the proposed collection of information; the agency form number, if applicable; and the frequency with which the information is proposed to be collected.

Written comments on the proposed ICC request are invited from all interested persons, organizations, public interest groups, and affected businesses. Because of the limited amount of time GAO has to review the proposed request, comments (in triplicate) must be recieved on or before July 21, 1980, and should be addressed to Mr. John M. Lovelady, Senior Group Director, Regulatory Reports Review, United States General Accounting Office, Room 5106, 441 G Street, NW, Washington, DC 20548.

Further information may be obtained from Patsy J. Stuart of the Regulatory Reports Review Staff, 202-275-3532.

Interstate Commerce Commission

The ICC requests clearance of a revision pertaining to Form QL&D-R, Quarterly Report of Freight Loss and Damage Claims—Railroads, required to be filed by some 42 Class I railroads with average operating revenues of $50 million or more, pursuant to Section 11145 of the Interstate Commerce Act. Data collected by the form are used for economic regulatory purposes and filing of the data is mandatory. The ICC estimates that reporting burden for carriers will average 64 hours per report. The revision, according to the Commission's Final Rule No. 37117, published in the Federal Register on May 22, 1980, is that Form QL&D-R will no longer be required to be filed beginning January 1, 1981.

The ICC requests reinstatement and clearance of Form QL&D-M, Quarterly Report of Freight Loss and Damage Claims—Motor Carriers, required to be filed by some 3600 motor carriers of property with average operating revenues of $1 million or more, pursuant to Section 11145 of the Interstate Commerce Act. Data collected by Form QL&D-M are used for economic regulatory purposes and filing of the data is mandatory. The ICC estimates that reporting burden for carriers will average 24 hours per report. Schedule B—Analysis of Theft is eliminated from Form QL&D-M by the Commission's Final Rule No. 37117, published in the Federal Register on May 22, 1980. The Final Rule also eliminates Form QL&D-M effective January 1, 1981.

Clearance of Form QL&D-M expired on September 30, 1979, and no extension has been granted since that time. Any ICC requirement that motor carriers maintain QL&D data or any ICC collection of QL&D data from motor carriers between September 30, 1979, and the date GAO may provide a clearance of form QL&D-M is in direct

violation of the Federal Reports Act (44 U.S.C. 3512).

Norman F. Heyl,

Regulatory Reports, Review Officer.

[FR Doc. 80-20037 Filed 7-2-80; 8:45 am]

BILLING CODE 1610-01-M

DEPARTMENT OF HEALTH AND HUMAN SERVICES

Health Resources Administration

Graduate Medical Education National Advisory Committee; Meeting

In accordance with section 10(a)(2) of the Federal Advisory Committee Act (Pub. L. 92-463), announcement is made of the following National Advisory body scheduled to meet during the months of July and September 1980:

Name: Graduate Medical Education National Advisory Committee

Date and Time: July 27-29, 1980, 8:30 a.m. and September 2-3, 1980, 8:30 a.m.

Place: July 27—Capital Hilton Hotel, South American Room, 16th and K Streets, NW., Washington, D.C. 20036

July 28-29 & September 2-3—Room 525-A, Hubert H. Humphrey Building 200 Independence Avenue, SW., Washington, D.C. 20201

Open for entire meetings.

Purpose. The Graduate Medical Education National Advisory Committee is responsible for advising and making recommendations with respect to: (1) present and future supply and requirements of physicians by specialty and geographic location; (2) ranges and types of numbers of graduate training opportunities needed to approach a more desirable distribution of physician services; (3) the impact of various activities which influence specialty distribution and the availability of training opportunities including systems of reimbursement and the financing of graduate medical education.

Agenda. July 28-29—Review and discussion of remaining specialty areas not covered in earlier meetings, and Committee approval of selected parts of September Report.

September 2-3—Approval of remainder of September Report.

Due to limited seating, attandance by the public will be provided on a first-come, first-serve basis.

Anyone wishing to obtain a roster of members, minutes of meeting, or other relevant information, should write to or contact MS. EDNA SIMON, Office of Graduate Medical Education, Health Resources Administration, Room 10-30, Center Building, 3700 East-West Highway, Hyattsville, Maryland 20782, Telephone (301) 436-6430.

Agenda items subject to change as priorities dictate.

Date: June 27, 1980.

Irene D. Skinner,

Advisory Committee Management Officer, Health Resources Administration.

[FR Doc. 80-19972 Filed 7-2-80; 8:45 am]

BILLING CODE 4110-01-M

National Advisory Council on Health Professions Education; Meeting

In accordance with section 10(a)(2) of the Federal Advisory Committee Act (Pub. L. 92-463), announcement is made of the following National Advisory body scheduled to meet during the month of August 1980:

Name: National Advisory Council on Health Professions Education

Date and Time: August 11-13, 1980, 8:30 a.m.

Place: Conference Room 10, 6th Floor, Building 31, C Wing, National Institutes of Health, Bethesda, Maryland 20205

Closed August 11, 8:30 a.m.—5:00 p.m.

Open remainder of meeting

Purpose. The Council advises the Secretary with respect to the administration of programs of financial assistance for the health professions and makes recommendations based on its review of applications requesting such assistance. This also involves advice in the preparation of regulations with respect to policy matters.

Agenda. The meeting will be closed to the public on August 11, for the review of applications for grants for Family Medicine Departments, Humanistic Health Care, Environmental Health Care and Construction. The closing is in accordance with the provision set forth in section 552b(c)(6), Title 5 U.S. Code, and the Determination by the Administrator, Health Resources Administration, pursuant to Public Law 92-463. The agenda for the open portion of the meeting will include, welcome and opening remarks; military health manpower; budget update; legislative update; health promotion and disease prevention; future agenda items; consideration of minutes of previous meeting; and discussion of future meeting dates.

Anyone wishing to obtain a roster of members, minutes of meetings, or other relevant information should write to or contact Mr. Robert L. Belsley, Bureau of Health Professions, Health Resources Administration, Room 4-27, Center Building, 3700 East-West Highway, Hyattsville, Maryland 20782, Telephone (301) 436-6564.

Agenda items are subject to change as priorities dictate.

Dated: June 27, 1980.

Irene D. Skinner,

Advisory Committee Management Officer, Health Resources Administration.

[FR Doc. 80-19971 Filed 7-2-80; 8:45 am]

BILLING CODE 4110-83-M

Office of Human Development Services

[Program Announcement No. 13634-801]

Model Projects on Aging Program

AGENCY: Office of Human Development Services, HHS.

SUBJECT: Announcement of Availability of Funds for the Model Projects on Aging Program.

SUMMARY: The Administration on Aging (AoA) announces that applications from State Units on Aging and Area Agencies on Aging are being accepted for grants under the Model Projects on Aging Program. This program is authorized by Section 421, Section 424 and Section 425 of the Older Americans Act of 1965, as amended (42 U.S.C. Section 3001, et. seq.).

DATES: Closing date for receipt of applications is: August 25, 1980.

Scope of This Announcement

This announcement relates only to discretionary grants programs conducted by the Administration on Aging under the Model Projects Programs, Sections 421, 424 and 425, Title IV-C of the Older Americans Act. The Administration on Aging also administers discretionary grants programs in research, education and training and long-term care. The announcement covers funding priorities for the remainder of the fiscal year 1980. Model Project funds also support the advocacy assistance program which combines the previous nursing home ombudsman and legal services programs. These funds are awarded to State Agencies on Aging and through contract with other qualified organizations. Other Model Project funds are used to support special interagency initiatives and national organizations in aging for the conduct of national impact projects in aging. For further information, consult the Model Projects Program Guidelines, Administration on Aging (MPD), 3280 HEW Building, North, Washington, D.C. 20201.

Program Purpose

The purpose of the Discretionary Projects Program, Model Projects and Demonstrations, is to enhance the scope and quality of services provided older persons; in general, to show better ways of promoting the well-being of older persons. The Demonstration and Model Projects Program seeks to test and demonstrate new mechanisms, systems, or approaches for determining the need for various services, and for providing and delivering these services promptly,

effectively and efficiently. The program seeks to improve the coordination and quality of social and other services for older persons, and facilitate the exchange of information to stimulate adoption of improved approaches. The project proposals should be based upon prior research and significant experience, give evidence of potential for success, and relate directly to the needs of the Nation at large.

Projects should serve as forerunners on which continuing activities or programs can be built, as solutions which other agencies and organizations can adopt or adapt to their use. Consequently, support generally is not approved for simple replication of an activity in a similar environment and with a population like that already involved.

Program Goals and Objectives

The areas projected for demonstration were selected to respond to statutory goals and priorities, especially as specified in Title IV–C, Sections 421, 424 and 425 of the Older Americans Act. The Act, more so than most discretionary project authorizations, identifies problem areas to which the Commissioner, in making awards, is enjoined to give "special consideration." In addition, this announcement builds directly on the principal agency goals identified by AoA: A. Improvements in Service Delivery, B. Independence through Informed Advocacy and C. Management Improvements.

Four factors influence the emerging issues: (1) society's growing recognition of, and concern for, the ever increasing number, proportion, problems and political power of Older Americans; (2) the recency of organized national, state and local programs to deal with aging; (3) the very rapid recent growth of State and Area Agencies for the aging; and (4) the excess of demand over supply of funds to support public expectations. The issues therefore center on availability of more effective and acceptable services, realistic public views of what services are needed and how to provide them, and more competent, efficient management of resources, planning and delivery of services.

Special Considerations

This announcement solicits demonstration projects of a developmental model building nature. Each project should specifically include the following phases.

A. In-depth identification and analysis of existing methods of addressing the problem along with the identification of new methods or approaches which have yet to be tested or have only been used to address other problems or in other settings.

B. Systematic analysis of the feasibility of demonstrating each of the methods and approaches identified above with the intent of determining the best methods of approaches, or the best 3 to 5 combinations of methods or approach, to address the problem in the most effective and least costly manner.

C. Selection of one method or approach or a combination of methods and approaches to be undertaken in a pilot demonstration. The small scale pilot is to demonstrate the potential to implement a full scale demonstration, including garnering necessary community support and resources and documenting the ability to implement the program.

D. An operation of up to two years during which financial responsibility is gradually assumed by ongoing programs.

Continuation of AoA support will be determined after review of progress and potential after phases B & C, respectively.

The need is great within the Nation for innovation and for general improvement in the quality of services available to older persons. State Units on Aging and Area Agencies on Aging as applicants are encouraged to propose different approaches, systems, technologies, statutes, policies, or other developments in the areas identified. Such applications will need to present convincingly the special contributions the project could be expected to make. Applications should propose to test the feasibility and estimated costs of implementing innovative approaches. Such projects should include needs identification, alternative strategies and plans for implementation.

State Units on aging and Area Agencies on aging are encouraged to seek the support of other sources of expertise in their communities—Colleges and Universities, non-profit organizations and other private sector groups. State and area agencies on aging are encouraged to undertake joint proposals with such other public or private groups.

The amounts indicated as available and the number of awards anticipated should be considered as suggestive, not restrictive, although AoA expects awards generally to reflect these projections.

Proposals are expected to address to the fullest extent appropriate the needs of the underserved, frail, low income, minority and rural elderly.

The financial assistance provided by AoA for the projects solicited will be in the form of cooperative agreements. These anticipate substantial involvement between the Administration on Aging and the recipient during performance of the project. The recipient can expect collaboration or participation in the management of the project.

Areas for Which Proposals Are Solicited

1. *Statewide Service Data Reporting System.* Projects awarded financial assistance in this area are to generate service data reporting systems which can begin to establish a network of interstate reporting systems capable of generating service and needs data comparable and cumulative from state to state. State Agencies on Aging frequently need State and national data against which to evaluate their own level of need and services. The systems are to be designed in such a manner as to allow accumulation of assessment and compliance data as well as service data, in Title III programs and such non-Title III programs as housing, education, labor, agriculture, etc.

Funds available $350,000. Number of awards anticipated: 3–5 Preferred Applicant: State Agencies on Aging.

2. *Services in Rural Areas.* Projects are sought which seek to demonstrate ways in which the availability of services and access (through outreach, transportation, etc.) to health and social services for elderly residents of rural areas can be improved. Projects should focus on creating a comprehensive system consisting of the necessary range of services, as well as focusing on how to get services to people in remote areas.

Funds available: $350,000. Number of awards anticipated: 3–4 Preferred applicants: State and Area Agencies on Aging.

3. *Abuse.* This area deals with prevention, protection and treatment of elderly persons who may be or have been mentally and physically mistreated or neglected. Proposals may include preventive services and treatment for the abuser. Development of case reporting procedures and systems will also be encouraged.

Funds available: $250,000. Number of awards anticipated: 3–4 Preferred applicants: State and Area Agencies on Aging.

4. *Enhancement of Services to Immigrants, Refugees, and Migrants.* Projects in this area shall address the provision of ethnically and culturally appropriate services to meet the needs of refugees, immigrants and migrants. Services might include orientation counseling, information on available services and how they can be obtained; development culturally sensitive

activities at nutrition sites, senior centers, and other service sites; matching ethnicity of staff to that of clientele.

Funds available: $250,000. Number of awards anticipated: 3–5 Preferred Applicants: Area Agencies on Aging.

5. *Enhancement of Services to Minorities.* Projects in this area shall be focused toward increasing the availability and quality of services to minorities. This may be accomplished through the elimination of recognized barriers to utilization of services by minorities, e.g. increase in the number of minority and minority oriented service providers, increase in number of minority staff, increase in sensitivity of staff to issues affecting minority participation, etc.

Funds available: $250,000. Number of awards anticipated: 3–5 Preferred applicants: Area Agencies on Aging with a high proportion of minority elderly in their catchment area.

Eligible Applicants

State Agencies on Aging and Area Agencies on Aging may apply for grants under this announcement. However, the Administration on Aging recognizes that these agencies are not the only groups with innovative approaches to addressing the program priorities in this announcement. Therefore, even though these agencies on aging do have the primary public sector responsibilities for service systems development and service delivery, the Administration on Aging invites and encourages colleges and universities, non-profit organizations and other private sector groups with innovative and promising ideas to collaborate with aging network agencies in the development and implementation of the demonstrations being solicited. Collaboration may be in the form of combining resources, sharing resources, jointly undertaking a project, providing technical or consultative services, etc. The latter groups should contact directly the Area Agencies on Aging or the State Units on Aging in their area to explore any potential activities in this regard.

Competing continuation proposals from current recipients of AoA Model Project and Demonstration Programs support, also will be considered. Preference will be given to funding new projects responsive to the priorities being announced herein. However, up to $200,000 may be awarded for competing continuations. Continuation proposals will compete against each other under the criteria in the Announcement under which the project is now funded.

Available Funds

It is expected that approximately 20 grants will be awarded pursuant to this announcement. The range of the initial grant awards is expected to be from $50,000 to $100,000 with the average award being about $75,000. The initial grant is to sustain the Federal share of the budget at least through November, 1981. Projects will be supported for periods of up to three years. Support for any additional time remaining in the project period depends upon funds available, the grantee's satisfactory performance on the project for which the grant was awarded and determination by the Commissioner that the additional award is in the best interest of government.

The amount of funds to be awarded at any time is at the discretion of the Commissioner on Aging who makes the final determination with respect to all grant applications and awards.

Grantee Share of the Project

The recipients of this financial assistance are expected to contribute significantly to the support of the project (e.g. first year (1) ten (10) percent of project cost, second year (2) twenty (20) percent of project cost and third year (3) forty (40) percent of project cost). The grantee share must be project-related and allowable under the Department's applicable cost principles in CFR Part 74 (see 45 FR 26274, September 19, 1973).

The Application Process

Availability of Forms

Application for financial assistance under the Model Projects on Aging Programs must be submitted on standard forms provided for this purpose. Application kits which include the prescribed forms and information may be obtained by writing: Model Projects Division, Administration on Aging, HEW North Building, 330 Independence Avenue, SW., Washington, D.C. 20201, telephone (202) 245–2143.

Kits are also available from Regional Offices, a list of which is attached as an appendix to this announcement.

Application Submission

One signed original and 2 copies of the grant application, including all attachments, must be submitted to the address indicated in the application instructions; additionally, to facilitate the review process, 2 more copies should be submitted. Additionally, for AAA applicants a copy of the application should be submitted concurrently to the State Agency on Aging and another to the Regional Office on Aging; and for State Agency on Aging applicants a copy of the application should be submitted to the Regional Office on Aging. The State Agency on Aging may request an Area Agency on Aging for its comments and will transmit any comments of the Area Agencies to the Commissioner on Aging.

A–95 Notification Process

The Model Projects on Aging Program is considered a covered program under the provision of OMB Circular A–95. Applicants for grants must, prior to submission of an application, notify both the State and Areawide A–95 Clearinghouses of the intent to apply for Federal assistance. If the application is for a Statewide project which does not affect areawide or local planning and programs, only the State clearinghouse need be notified. Applicants should contact the appropriate State clearinghouse (listed at 42 FR 2210, January 10, 1977) for information on how they can meet the A–95 requirements.

Application Consideration

The Administration on Aging determines the final action to be taken with respect to each grant application. Applications which are complete and conform to the requirements of this program announcement are subjected to a competitive objective review and evaluation by qualified persons independent of the cognizant program office. The results of the review assist the Commissioner on Aging in considering competing applications. The Commissioner's consideration also takes into account comments of the A–95 clearinghouses, the HEW Regional Offices and Headquarters program offices and, where appropriate, the comments of State and Area Agencies. Comments may also be requested from appropriate specialists and consultants inside and outside the Federal government.

After the Commissioner has reached a decision either to approve or not to fund a competing application, unsucessful applicants are notified in writing of that decision. Successful applicants are notified through issuance of a Notice of Financial Assistance Awarded which sets forth the amount of funds granted, the terms and conditions of the grant, the effective date of the grant, the budget period for which support is given, the total grantee participation expected, and the total period for which support is contemplated.

Criteria for Review and Evaluation of Applications

Competing grant applications will be reviewed and evaluated against the following criteria:

Potential for improvement of planning, management or delivery of services at State and local levels or the enlargement of the knowledge base in one or more of the areas for which proposals are solicited.

Relevance to the needs of the population addressed by this announcement with special consideration for proposals which concentrate appropriately on problems relevant to the very old and impaired, isolated or with low income and minority status.

Completeness and feasibility of proposed project design including a presentation of the state-of-the-art practice.

Carefully formulated objectives and feasibility of methods for meeting those objectives.

Adequacy of plans for data gathering, evaluation and reporting of resource requirements, costs and benefits of activities demonstrated.

Capability of proposed staff and adequacy of facilities and resources of applicant organizations.

Experience of applicant organization in conducting related activities.

Feasibility of proposed budget; justification of costs, and cost sharing by the applicant or other organizations.

Likelihood of completion of project within proposed time schedule.

Potential for replication of the model; plans for implementation and dissemination of results of the project, including any products for use by others.

Plans for continuance of any services to older persons which will be generated by the proposed project, if any, beyond the termination of financial support under Model Projects on Aging.

Commitment from collaborating agencies and organizations (or plans therefor) where such could be expected to contribute to the value or success of the project.

Closing Date for Receipt of Applications

The closing date for receipt of applications under this program announcement is August 25, 1980 for new projects. Competing extension applications normally may be submitted at any time for action during the fiscal quarter following submission: however, proposals to be acted on prior to December 31, 1980 must be submitted by August 25, 1980. Applications may be mailed or hand delivered. Hand delivered applications are accepted during normal working hours of 9:00 a.m. to 5:00 p.m.

(Catalog of Federal Domestic Assistance Program Number: 13.634. Model Projects on Aging)

Dated: June 23, 1980.

Robert Benedict,

Commissioner on Aging.

Approved: June 26, 1980.

Cesar A. Perales,

Assistant Secretary for Human Development Services.

[FR Doc. 80-19909 Filed 7-2-80; 8:45 am]

BILLING CODE 4110-92-M

Health Services Adminstration

Maternal and Child Health/Crippled Children's Service Program; Policy Statement on Third-Party Reimbursement for Services to Mothers and Children

AGENCY: Health Services Administration.

ACTION: General notice.

SUMMARY: It is the position of the Health Services Administration that grantees receiving funds under the Maternal and Child Health/Crippled Children's (MCH/CC) program are required to make all reasonable efforts to obtain reimbursement for the costs of providing preventive, diagnostic and treatment services from third-parties, including private insurance carriers and government agencies. This requirement applies regardless of whether or not a charge is made to the individual for such services.

FOR FURTHER INFORMATION CONTACT: Howard Hilton, Director, Division of Health Services Financing, Bureau of Community Health Services, U.S. Department of Health and Human Services, Room 9A16, Parklawn Building, 5600 Fishers Lane, Rockville, Maryland, 20857, 301-443-2226.

SUPPLEMENTARY INFORMATION: The MCH/CC program, authorized under Title V of the Social Security Act, is a major national resource for the provision of basic health services with emphasis on the reduction of infant and maternal mortality and morbidity and teenage pregnancies. A significant priority is the promotion and improvement of the health of mothers and children in areas with unserved and underserved populations. The CC program insures that States develop, support and improve services for locating, diagnosing, and treating children who are crippled or suffer from conditions which lead to crippling, and requires the provision of medical and rehabilitative services. A unique feature of this program is the provision of diagnostic services to any child without charge.

Some private insurance carriers have questioned the extent of their health insurance contractural obligations to subscribers where health services are provided by federally supported CC grantees. On July 22, 1974, final regulations were issued for the MCH/CC program, and 42 CFR § 51a.109 states that: "With respect to services for crippled children, the State plan shall contain an assurance that the diagnostic services under the plan will be made available within the area served by each diagnostic center to any child (a) Without charge to the child or his family, except to the extent that payment will be made by a third party. . . ." The private carriers contend that this regulation only specifies diagnostic services and that, therefore, they are not responsible for reimbursing the costs of providing treatment services.

The intent of 42 CFR § 51a.109 is to assure that fees will not serve as a barrier to any child's access to early screening and diagnosis. The preamble to the final regulations at 39 FR 26692 (7/22/74) states that, "large increases in Federal appropriations were made based on the intention that early screening and diagnosis be provided to all children," and that, "charges other than those paid by third-parties have never been made for such services, in order to maximize casefinding in accordance with Congressional intent." The cost of providing other MCH services, including treatment services, may be charged to the child and his family, and they may, directly, or through the grantee, seek reimbursement from third-party insurers for such costs according to the terms of their insurance policy. Nothing in Title V of the Social Security Act or the implementing regulations may fairly be read to release third-party insurers from their contractual obligations to cover the costs of MCH/CC services to the individuals they insure.

Dated: June 24, 1980.

George I. Lythcott,

Administrator, Health Services Administration.

Certifying Officer Date

[FR Doc. 80-20007 Filed 7-2-80; 8:45 am]

BILLING CODE 4110-84-M

Public Health Service

Information Regarding Requirements for Health Maintenance Organizations

AGENCY: Public Health Service, HHS.

ACTION: Correction notice: Information regarding requirements for qualified health maintenance organizations.

SUMMARY: This notice corrects an error made in a Federal Register notice with respect to information regarding requirements for health maintenance organizations (HMOs).

FOR FURTHER INFORMATION CONTACT: Howard R. Veit, Director, Office of Health Maintenance Organizations, Park Building—3rd Floor, 12420 Parklawn Drive, Rockville, Maryland 20857, 301/443-4106.

SUPPLEMENTARY INFORMATION: Information regarding requirements for federally qualified HMOs was published in the Federal Register on April 29, 1980, at 45 FR 28659. The table in columns 2 and 3 of page 28659 contained calculations explaining an HMO's community rating system. Set forth below is the corrected version of that table:

(1) Type of contract	(2) Dist'n of contracts (percent)	(3) Average contract size	(4) Wtd. avg. contract size (col. 2 x col. 3)	(5) Prepaid rate	(6) Weighted average rate (col. 2 x col. 5)
Single	30	1	.30	$33.41	$10.023
2 party	20	2	.40	66.82	13.364
3 + party	50	3.5	1.75	100.23	40.115
Total	100		2.45		73.502

Dated: June 25, 1980.

Howard R. Veit,

Director, Office of Health Maintenance Organizations.

[FR Doc. 80-20041 Filed 7-2-80; 8:45 am]

BILLING CODE 4110-85-M

DEPARTMENT OF THE INTERIOR

Bureau of Land Management

[8341 (14.3)]

Oregon; Closure to Motorized Vehicles; Correction

June 24, 1980.

AGENCY: Bureau of Land Management, Interior.

ACTION: Correction Document of Previous Notice.

Two corrections are hereby given for the notice which was published in the Thursday, June 5, 1980 Federal Register, Volume 45, Number 110, page 37894. Both corrections are in the first paragraph of said notice, and as corrected should read as follows:

"Notice is hereby given that under the authority of regulations in 43 CFR Part 8340 and in cooperation with the State of Oregon, acting by and through the Oregon Department of Fish and Wildlife, pursuant to an agreement executed jointly under ORS 498.152, and Sec. 307 of the Federal Land Policy and Management Act of 1976 (43 U.S.C. 1737), the below described public lands under the administration of the Bureau of Land Management are designated as closed to vehicle use from August 1 through the general elk season each year. All motorized vehicles are prohibited from entering the closed area except motorized vehicle travel by landowners, law enforcement officials, and authorized individuals for land or wildlife management purposes."

Dated: June 24, 1980.

John D. Evans,

Acting District Manager.

[FR Doc. 80-19979 Filed 7-2-80; 8:45 am]

BILLING CODE 4310-84-M

Roswell District Grazing Advisory Board; Meeting

Notice is hereby given in accordance with Pub. L. 92-463 that a meeting of the Roswell District Grazing Advisory Board will be held on August 7, 1980, at 10:00 a.m. in the Conference Room of the Roswell District Office, 1717 West Second Street, Roswell, New Mexico.

The agenda for the meeting will include: (1) A discussion of the organization and functions of the Board; (2) election of officers; (3) discussion of the rangeland consultation process; and (4) a review of the proposed expenditure of range betterment funds for range improvements.

The meeting is open to the public. Interested persons may make oral statements to the Board or file written statements. Anyone wishing to make an oral statement must notify the District Manager, Bureau of Land Management, by August 6, 1980.

Summary minutes of the Board meeting will be maintained in the District Office and will be available for public inspection and reproduction during regular business hours within 30 days following the meeting.

Dated: June 24, 1980

Phillip D. Moreland,

Acting District Manager.

[FR Doc. 80-19955 Filed 7-2-80; 8:45 am]

BILLING CODE 4310-84-M

Butte District Grazing Advisory Board; Meeting

Notice is hereby given, in accordance with Pub. L. 92-463, that a meeting of the Butte District Grazing Advisory Board will be held on Tuesday and Wednesday, August 5 and 6, 1980.

The meeting will begin at 8 a.m., August 5 in the conference room of the Butte District Office at 106 North Parkmont (Industrial Park), Butte, Montana.

The agenda for the meeting will include: (1) the East Pioneer Experimental Stewardship Program; (2) fiscal year 1980 and fiscal year 1981 range improvement projects; (3) the Mountain Foothills Range Environmental Statement; (4) Allotment management planning; (5) the wilderness program, status and constraints on maintaining range improvements; (6) wild horse management; (7) a field tour of key allotments in the Dillon Resource Area.

The meeting is open to the public. Interested persons may make oral statements to the board between 10 and 11 a.m. on August 5, or file written statements for the board's consideration. Anyone wishing to make an oral statement or participate in the field tour must notify the District Manager, Bureau of Land Management, P.O. Box 3388, Butte, Montana 59701 by August 4, 1980.

Summary minutes of the board meeting will be maintained in the District Office and will be available for public inspection and reproduction, during regular business hours, within 30 days following the meetings.

Dated: June 25, 1980.

Jack A. McIntosh,

District Manager.

[FR Doc. 80-20029 Filed 7-2-80; 8:45 am]

BILLING CODE 4310-84-M

Notice of Realty Action—Exchange of Public Lands in Dona Ana County, N. Mex.

The following described public lands have been determined to be suitable for exchange under Section 206 of the Federal Land Policy and Management Act of 1976 (90 Stat. 2743).

Township 26 South, Range 3 East, NMPM
Section 11: Lots 22-25
Section 14: Lots 4-9, 15-18, 26-38, 42.

Acres: 44.94

In exchange for these lands the Federal government will acquire the following described private land in Dona Ana County from Lauro Guaderrama.

Township 22 South, Range 4 East, NMPM
Section 20: N½N½S½SE¼, and the N½SE¼
save and except the S½N½NE¼SE¼.

Acres: 90

The fair market value of the private land to be exchanged is approximately equal to the fair market value of the Federal lands that will be exchanged. All mineral rights on the Federal lands and the private lands will be transferred.

The purpose of the exchange is to acquire the lands in support of the Bureau of Land Management's public recreation program at the nearby Aguirre Spring Recreation Site. The Federal lands that will be exchanged lie about 3 miles north of Anthony, New Mexico. They are valuable for subdivision purposes and Bureau land use plans have recommended their disposal. These plans were subject to public input and review.

Rationale for Decision

An Environmental Assessment was prepared for this exchange which determined it to be in the public interest to exchange these lands in the manner that has been described. The Federal lands proposed for disposal by exchange are of minor importance to BLM programs and receive limited public use. Their primary value is for development by private industry for homesite or similar use. Such development will promote local and state governmental policies of preservation of valley land for agriculture. Mineral values to be disposed of are not significant. State and local governmental entities have been informed of the exchange and comments invited.

Terms and Conditions of the Exchange

1. Surface and mineral estates will be exchanged on both Federal and private lands.

2. Both private and Federal lands will be subject to easements to preserve present facilities and to protect access to adjacent landowners.

For a period of 60 days, interested parties may submit comments to the Secretary of the Interior, LLM-320, Washington, D.C. 20240. Any adverse comments will be evaluated by the Secretary, who may vacate or modify this realty action and issue a final determination. In the absence of any action by the Secretary, this realty action will become the final determination of the Department.

Arthur W. Zimmerman,

State Director.

[FR Doc. 80-20027 Filed 7-2-80; 8:45 am]

BILLING CODE 4310-84-M

[CA 3344 WR, CA 7083 WR, CA 7086 WR]

California; Proposed Continuation of Withdrawals and Opportunity for Public Hearing

As a result of the reviews made pursuant to Section 204(l) of the Federal Land Policy and Management Act of 1976 (90 Stat. 2754; 43 U.S.C. 1714), the Bureau of Land Management, U.S. Department of the Interior, proposes to continue the following Public Water Reserve withdrawals:

San Bernardino Meridian, California

1. Public Water Reserve 107, Interpretation, CA 3344 WR:
T. 12 N., R. 8 E.,
Sec. 2, W½;
Sec. 11, All;
Sec. 14, NW¼.
T. 13 N., R. 8 E.,
Sec. 35, SW¼.
The areas described aggregate approximately 1,297 acres in San Bernardino County, California.

2. Public Water Reserve 107, Interpretation, CA 7083 WR
T. 15½ N., R. 14 E.,
Sec. 19, Lot 1 and E½SE¼;
Sec. 20, Lot 4 and W½SW¼.
The areas described aggregate 231.49 acres in San Bernardino County, California.

3. Public Water Reserve 159, CA 7086 WR:
T. 14 S., R. 5 E.,
Sec. 26, W½SE¼;
Sec. 35, W½NE¼, SE¼NW¼, E½SW¼, and SW¼SW¼.
The areas described aggregate 320 acres in San Diego County, California.

For a period of 30 days from the date of publication of this notice (until August 4, 1980), all persons who wish to submit comments, suggestions, or objections in connection with the proposed withdrawal continuations may present their views in writing to the undersigned authorized officer of the Bureau of Land Management.

Pursuant to Section 204(h) of the Federal Land Policy and Management Act of 1976, notice is hereby given that an opportunity for a public hearing is afforded in connection with the proposed withdrawal continuations. All interested persons who desire to be heard on the proposed continuations must submit a written request for a hearing to the undersigned officer. If the State Director, in his discretion, determines that a public hearing is justified, a notice will be published in the Federal Register giving the time and place of such hearing. The public hearing will be scheduled and conducted in accordance with BLM Manual, Section 2351.16B.

The Bureau of Land Management's procedures provide that the authorized officer will review the justification and recommended termination date for each existing BLM withdrawal to ensure that continuation provides for maximum public and private use of the withdrawn lands consistent with the purpose of the withdrawal and that all withdrawals lacking justification are recommended for either total or partial revocation.

The authorized officer will prepare a report for consideration by the Secretary of the Interior, who will determine whether, and for how long, the continuation of the existing withdrawals is justified. The determination of the Secretary will be published in the Federal Register.

All communications in connection with the proposed withdrawal continuations should be addressed to the undersigned, Bureau of Land Management, Room E-2841 Federal Office Building, 2800 Cottage Way, Sacramento, California 95825.

Walter F. Holmes,

Chief, Branch of Lands and Minerals Operations.

[FR Doc. 80-20031 Filed 7-2-80; 8:45 am]

BILLING CODE 4310-84-M

[OR 23735]

Oregon; Proposed Withdrawal and Reservation of Lands

The Bureau of Land Management, Department of the Interior, has filed application Serial No. OR 23735 for the withdrawal of the following described public lands from settlement, sale, location, or entry under all of the general land laws, including the mining laws, but not the mineral leasing laws, subject to valid existing rights.

Willamette Meridian

T. 41 S., R. 42 E.,
Sec. 12, E½E½SE¼;
Sec. 13, That portion of Lot 1 lying north and east of a line described as follows: beginning at a point where the east boundary of the Camp McDermitt Hay Reservation intersects the east and west center line of the NE¼ of Section 13, thence northwesterly along the east boundary of the Hay Reservation to a point due south of the E-E ¼₄ corner of Sections 12 and 13, thence north to the E-E ¼₄ corner of Sections 12 and 13; and that portion of the SE¼NE¼ lying north of the Camp McDermitt Hay Reservation.
T. 41 S., R. 43 E.,
Sec. 7, S½ of Lot 1, Lots 2, 3, and 4, SW¼NE¼NW¼, W½SE¼NW¼, and E½SW¼;
Sec. 18, Lots 1, 2, 6, and 7, and E½NW¼.

The areas described aggregate 514.18 acres in Malheur County, Oregon.

The State of Oregon Aeronautics Division has filed an application to lease 64.45 acres of public land within the above described area for the proposed McDermitt State Airport. The proposed

withdrawal will provide a buffer zone around the airport facility and prevent encroachment in the approach, transitional, and primary surface zones. A relocated Bureau of Land Management administrative site and a future fire retardant complex are included within the proposed withdrawal boundary. These sites are described as follows:

T. 41 S., R. 43 E.,
Sec. 7, E½ of Lot 4, and SE¼SW¼;
Sec. 18, That portion of Lot 2 lying within the SW¼, and Lots 6 and 7.

Aggregating approximately 123 acres.

On or before August 11, 1980, all persons who wish to submit comments, suggestions, or objections in connection with the proposed withdrawal may present their views in writing to the undersigned authorized officer of the Bureau of Land Management.

Pursuant to section 204(h) of the Federal Land Policy and Management Act of 1976, notice is hereby given that an opportunity for a public hearing is afforded in connection with the proposed withdrawal. All interested persons who desire to be heard on the proposed withdrawal must submit a written request for a hearing to the undersigned before August 11, 1980. Upon determination by the State Director, Bureau of Land Management, that a public hearing will be held, a notice will be published in the Federal Register, giving the time and place of such hearing. Public hearings are scheduled and conducted in accordance with BLM Manual, Sec. 2351.16B.

The Department of the Interior's regulations provide that the authorized officer of the BLM will undertake such investigations as are necessary to determine the existing and potential demands for the lands and their resources. He will ensure that the area sought is the minimum essential to meet the desired needs while providing for the maximum concurrent utilization of the lands for other purposes.

The authorized officer will also prepare a report for consideration by the Secretary of the Interior who will determine whether or not the lands will be withdrawn and reserved as requested. The determination of the Secretary on the application will be published in the Federal Register.

The lands will be segregated as specified above for a period of two years from the date of publication of this notice in the Federal Register, unless the application is rejected or the withdrawal is approved prior to that date. Current administrative jurisdiction over the segregated lands will not be affected by the temporary segregation.

All communications in connection with this proposed withdrawal should be addressed to the undersigned officer, Bureau of Land Management, Department of the Interior, P.O. Box 2965, Portland, Oregon 97208.

Dated: June 24, 1980.

David E. Sinclair,

Acting Chief, Branch of Lands and Minerals Operations.

[FR Doc. 80-20034 Filed 7-2-80; 8:45 am]

BILLING CODE 4310-84-M

Panoche National Cooperative Land and Wildlife Management Area Reissue of Vehicle Closure Under New Regulations

Notice is hereby given that in accordance with the provisions of 43 CFR 8341.2 (formerly 43 CFR 6292.2) all public land in the vicinity of Mercy Hot Springs between Big Panoche Creek and Little Panoche Creek is closed to vehicle use except during the upland game bird (Quail and Chukar) hunting season when certain clearly identified roads will be opened temporarily to four-wheeled vehicles. Public Lands designated closed are in:

T. 13S., R. 11E., M.D.M.
Secs. 32, 33, 34, 35
T. 14S., R. 10E., M.D.M.
Secs. 1, 2, 10, 11, 12, 18, 24
T. 14S., R. 11E., M.D.M.
All Except Section 16
T. 14S., R. 12E., M.D.M.
Sec. 31
T. 15S., R. 11E., M.D.M.
Secs. 1, 2, 3, 4, 5, 6, 7, 8, 9, 10, 11, 12, 13, 14, 15, 17, 18, 20, 21, 22
T. 15S., R. 12E., M.D.M.
Secs. 6, 7, 8, 17, 18

Excluded from this closure are government vehicles on official business, authorized lessees and permittees.

This closure will be effective immediately. Areas closed will be identified by signs and locked gates. This area has been under a similar closure since April 14, 1969. For further information contact the District Manager, Bureau of Land Management Folsom District Office, 63 Natoma Street, Folsom, CA 95630. (Phone (916) 985-4474).

Any person who violates or fails to comply with the vehicle closure is subject to arrest as prescribed in 43 CFR 8340.0-7. Penalties for violations may be a fine of not more than $1,000.00 or imprisonment for not longer than 12 months or both.

Alan P. Thomson,

District Manager.

[FR Doc. 80-20035 Filed 7-2-80; 8:45 am]

BILLING CODE 4310-84-M

Outer Continental Shelf Advisory Board; Alaska Regional Technical Working Group Committee; Meeting

This notice is issued in accordance with the provisions of the Federal Advisory Committee Act, Public Law 92-643.

The Alaska Regional Technical Working Group Committee of the National Advisory Board will hold a meeting on July 23-24, 1980, beginning at 9 a.m. in the basement Oceanside conference room, 620 East 10th Avenue, Anchorage, Alaska.

The meeting will cover the following principal subjects:

—A discussion of Beaufort Sea sale 71 scoping issues and alternatives
—A presentation by the New England River Basins Commission on a transportation planning methodology study
—A presentation by the Corps of Engineers on their OCS permitting responsibilities
—Review of FY 1982 Draft Studies Plan

The meeting is open to the public. Public attendance may be limited by the space available. Summary minutes of the meeting will be available at the Alaska OCS Office for public inspection and copying 3 weeks after the meeting.

For further information, contact Gordy Euler at the Alaska OCS Office, (907) 276-2955.

Dated: June 24, 1980.

Esther C. Wunnicke,

Manager, Alaska OCS Office.

[FR Doc. 80-20032 Filed 7-2-80; 8:45 am]

BILLING CODE 4310-84-M

Fish and Wildlife Service

New Mexico; Application for Right-of-Way Permit

Notice is hereby given that under section 28 of the Mineral Leasing Act of 1920 (30 U.S.C. 185), as amended by the Act of November 16, 1973 (37 Stat. 576), that the Chevron Pipeline Company has applied for a right-of-way permit to construct and operate a 8-inch oil pipeline across lands of the Sevilleta National Wildlife Refuge in Socorro County, New Mexico.

The purpose of this notice is to inform the public that the U.S. Fish and Wildlife Service will be proceeding with consideration of whether their application should be approved, and if so, under what terms and conditions.

Interested persons desiring to express their views should do so within 30 days by sending their comments with their name and address to the Regional Director, U.S. Fish and Wildlife Service,

P.O. Box 1306, Albuquerque, New Mexico 87103.

Jack P. Woolstenhulme,

Acting Deputy Regional Director, U.S. Fish and Wildlife Service.

June 26, 1980.

[FR Doc. 80-19953 Filed 7-2-80; 8:45 am]

BILLING CODE 4310-55-M

Geological Survey

Oil and Gas and Sulphur Operations in the Outer Continental Shelf

AGENCY: U.S. Geological Survey, Department of the Interior.

ACTION: Notice of the receipt of a proposed development and production plan.

SUMMARY: This Notice announces that Chevron U.S.A. Inc., Unit Operator of the South Bay Marchand Federal Unit Agreement No. 14-08-001-3915, submitted on June 23, 1980, a proposed Annual Plan of Development/Production describing the activities it proposes to conduct on the South Bay Marchand Federal Unit.

The purpose of this Notice is to inform the public, pursuant to Section 25 of the OCS Lands Act Amendments of 1978, that the Geological Survey is considering approval of the Plan and that it is available for public review at the offices of the Conservation Manager, Gulf of Mexico OCS Region, U.S. Geological Survey, 3301 N. Causeway Blvd., Room 147, Metairie, Louisiana 70002.

FOR FURTHER INFORMATION CONTACT: U.S. Geological Survey, Public Records, Room 147, open weekdays 9:00 a.m. to 3:30 p.m., 3301 N. Causeway Blvd., Metairie, Louisiana 70002, phone 837-4720, ext. 226.

SUPPLEMENTARY INFORMATION: Revised rules governing practices and procedures under which the U.S. Geological Survey makes information contained in Development and Production Plans available to affected States, executives of affected local governments, and other interested parties became effective on December 13, 1979 (44 FR 53685). Those practices and procedures are set out in a revised Section 250.34 of Title 30 of the Code of Federal Regulations.

Dated: June 26, 1980.

Lowell G. Hammons,

Conservation Manager, Gulf of Mexico OCS Region.

Office of the Secretary

Privacy Act of 1974—Revision to System of Records

Notice is hereby given that the Bureau of Indian Affairs is revising a Privacy Act system of records titled "Integrated Records Management System—Interior, BIA-25". This notice revises the description of the system of records published in the Federal Register on October 25, 1979 (44 FR 61464). Only the descriptions of the System Location and System Manager(s) and Address are revised; no other changes are being made to the system notice. The amended system notice is published in its entirety below.

Inquiries regarding this notice can be directed to the Departmental Privacy Act Officer, U.S. Department of the Interior, Washington, D.C. 20240, telephone 343-6191.

Dated: June 23, 1980.

William L. Kendig,

Deputy Assistant Secretary of the Interior.

SYSTEM NAME:

Integrated Records Management System—Interior, BIA-25

SYSTEM LOCATION:

(1) *Division of Systems Operation, Bureau of Indian Affairs, 500 Gold Ave., SW., Albuquerque, New Mexico 87103;*

(2) *Central, Area, Agency and Field Offices, Schools of the BIA (see appendix for addresses) or contractors providing time-share services to the BIA:*

CATEGORIES OF INDIVIDUALS COVERED BY THE SYSTEM:

Individual Indian and Indian Tribal Groups that are owners of real property held in trust by the Government, individuals or groups that are potential or actual lessees of that property, individuals who have been assigned interests of any in Indian Tribes, Pueblos or corporations, and individual Indians who have money accounts.

CATEGORIES OF RECORDS IN THE SYSTEM:

Land description, current ownership, dower and life estate interest, information on all types of leases or other land uses including grazing, farming, minerals mining, timber and business, etc. Information on individuals including name, address, aliases, sex, date of birth, tribal membership and blood quantums, etc. General ledgers showing deposits and withdrawals from Indian accounts.

AUTHORITY FOR MAINTENANCE OF THE SYSTEM:

25 U.S.C. 151, 25 U.S.C. 392, 25 U.S.C. 415, and 25 U.S.C. 163.

ROUTINE USES OF RECORDS MAINTAINED IN THE SYSTEM INCLUDING CATEGORIES OF USERS AND THE PURPOSES OF SUCH USES:

The primary uses of the records are:

(a) To control individual Indians money accounts and disclose to them the status of those accounts.

(b) Identification of individual Indians and Indian Tribal groups with interest in lands held in trust.

(c) Control of leases on Indian trust lands and real property, and collection and distribution of lease income.

(d) Bill individual owners or lessees for irrigation.

(e) Determination of eligibility of individuals to participate in or enjoy benefits from an interest in or enjoy benefits from an interest in a tribal group.

(f) Lists of approved enrollees used to distribute funds or income, or as a base to gather consensus or ownership data for planning purposes. Disclosures outside the Department of the Interior may be made.

(1) To the Tribe, band, Pueblo or corporation of which the individual to whom a record pertains is a member or a stockholder.

(2) To a Federal, state or local agency maintaining civil, criminal or other relevant enforcement information, such as current licenses, if necessary to obtain information relevant to an agency decision concerning the hiring or retention of an employee, the issuance of a security clearance, the letting of a contract, or the issuance of a license, grant or other benefit.

(3) To a Federal agency, in response to its request, in connection with the hiring or retention of an employee, the issuance of a security clearance, the reporting of an investigation of an employee, the letting of a contract, or the issuance of a license, grant or other benefit by the requesting agency's decision on the matter.

(4) To the U.S. Department of Justice in the event of litigation or potential litigation involving the records or the subject matter of the records.

(5) Transfer, in the event there is indicated a violation or a potential violation of a statute, regulation, rule, order or license whether civil, criminal or regulatory in nature, to the appropriate agency or agencies, whether federal, state, local or foreign, charged with the responsibility of enforcing or implementing the statute, rule, regulation, order or license violated or potentially violated.

POLICIES AND PRACTICES FOR STORING, RETRIEVING, ACCESSING, RETAINING, AND DISPOSING OF RECORDS IN THE SYSTEM:

STORAGE:

Manual: letter files, computer readable media, input forms and computer printouts. Computer: mag tape and disk files.

RETRIEVABILITY:

(a) Indexed by name, identification numbers, family numbers, lease numbers, tract numbers, etc.

(b) Retrieved by manual search or computer inquiry.

SAFEGUARDS:

In accordance with 43 CFR 2.51.

RETENTION AND DISPOSAL:

Permanent records are retrieved. Closed or inactive records are transferred to GSA storage. Prior information on mag tape erased as updated information is added to the system.

SYSTEM MANAGER(S) AND ADDRESS:

Assistant Director, Administrative Services Center, 500 Gold Ave., SW., Albuquerque, NM 87103.

NOTIFICATION PROCEDURE:

System Manager or with respect to records maintained in the office for which he is responsible, an Agency Superintendent or an Area or Field Office Director. A written and signed request stating that the requester seeks information concerning records pertaining to him is required. See 43 CFR 2.60.

RECORD ACCESS PROCEDURES:

A request for access may be addressed the same as for Notification. The request must be in writing and be signed by the requester, and must meet the content requirements of 43 CFR 2.63.

CONTESTING RECORD PROCEDURES:

A petition for amendment shall be addressed to the System Manager and must meet the requirements of 43 CFR 2.71.

RECORD SOURCE CATEGORIES:

Enrollees or claimants. Birth, marriage and death certificates, and family and tribal histories. Owners and lessees. Titles, deeds, probates, all types of land and water rights and usages documents. Individual Indians, depositors in the accounts and claimants against the accounts.

[FR Doc. 80-19958 Filed 7-2-80; 8:45 am]
BILLING CODE 4310-02-M

INTERSTATE COMMERCE COMMISSION

Permanent Authority Decisions; Decision-Notice

The following applications, filed on or after March 1, 1979, are governed by Special Rule 247 of the Commission's *Rules of Practice* (49 CFR § 1100.247). These rules provide, among other things, that a petition for intervention, either in support of or in opposition to the granting of an application, must be filed with the Commission within 30 days after the date notice of the application is published in the **Federal Register**. Protests (such as were allowed to filings prior to March 1, 1979) *will be rejected.* A petition for intervention without leave must comply with Rule 247(k) which requires petitioner to demonstrate that it (1) holds operating authority permitting performance of any of the service which the applicant seeks authority to perform, (2) has the necessary equipment and facilities for performing that service, and (3) has performed service within the scope of the application either (a) for those supporting the application, or, (b) where the service is not limited to the facilities of particular shippers, from and to, or between, any of the involved points.

Persons unable to intervene under Rule 247(k) may file a petition for leave to intervene under Rule 247(l) setting forth the specific grounds upon which it is made, including a detailed statement of petitioner's interest, the particular facts, matters, and things relied upon, including the extent, if any, to which petitioner (a) has solicited the traffic or business of those supporting the application, or, (b) where the identity of those supporting the application is not included in the published application notice, has solicited traffic or business identical to any part of that sought by applicant within the affected marketplace. The Commission will also consider (a) the nature and extent of the property, financial, or other interest of the petitioner, (b) the effect of the decision which may be rendered upon petitioner's interest, (c) the availability of other means by which the petitioner's interest might be protected, (d) the extent to which petitioner's interest will be represented by other parties, (e) the extent to which petitioner's participation may reasonably be expected to assist in the development of a sound record, and (f) the extent to which participation by the petitioner would broaden the issues or delay the proceeding.

Petitions not in reasonable compliance with the requirements of the rule may be rejected. An original and one copy of the petition to intervene shall be filed with the Commission indicating the specific rule under which the petition to intervene is being filed, and a copy shall be served concurrently upon applicant's representative, or upon applicant if no representative is named.

Section 247(f) provides, in part, that an applicant which does not intend to timely prosecute its application shall promptly request that it be dismissed, and that failure to prosecute an application under the procedures of the Commission will result in its dismissal.

If an applicant has introduced rates as an issue it is noted. Upon request, an applicant must provide a copy of the tentative rate schedule to any protestant.

Further processing steps will be by Commission notice, decision, or letter which will be served on each party of record. *Broadening amendments will not be accepted after the date of this publication.*

Any authority granted may reflect administrative acceptable restrictive amendments to the service proposed below. Some of the applications may have been modified to conform to the Commission's policy of simplifying grants of operating authority.

Findings

With the exception of those applications involving duly noted problems (e.g., unresolved common control, unresolved fitness questions, and jurisdictional problems) we find, preliminarily, that each common carrier applicant has demonstrated that its proposed service is required by the present and future public convenience and necessity, and that each contract carrier applicant qualifies as a contract carrier and its proposed contract carrier service will be consistent with the public interest and the transportation policy of 49 U.S.C. § 10101. Each applicant is fit, willing, and able properly to perform the service proposed and to conform to the requirements of Title 49, Subtitle IV, United States Code, and the Commission's regulation. Except where specifically noted, this decision is neither a major Federal action significantly affecting the quality of the human environment nor a major regulatory action under the Energy Policy and Conservation Act of 1975.

In those proceedings containing a statement or note that dual operations are or may be involved we find, preliminarily and in the absence of the issue being raised by a petitioner, that the proposed dual operations are consistent with the public interest and the transportation policy of 49 U.S.C. § 10101 subject to the right of the

Commission, which is expressly reserved, to impose such terms, conditions or limitations as it finds necessary to insure that applicant's operations shall conform to the provisions of 49 U.S.C. § 10930(a) [formerly section 210 of the Interstate Commerce Act].

In the absence of legally sufficient petitions for intervention, filed on or before August 4, 1980 (or, if the application later becomes unopposed), appropriate authority will be issued to each applicant (except those with duly noted problems) upon compliance with certain requirements which will be set forth in a notification of effectiveness of the decision-notice. To the extent that the authority sought below may duplicate an applicant's other authority, such duplication shall be construed as conferring only a single operating right.

Applicants must comply with all specific conditions set forth in the following decision-notices on or bfore August 4, 1980, or the application shall stand denied.

Note: All applications are for authority to operate as a common carrier, by motor vehicle, in interstate or foreign commerce, over irregular routes, except as otherwise noted.

Volume No. 190

Decided: May 21, 1980.

By the Commission, Review Board Number 3, Members Parker, Fortier, and Hill.

MC 76 (Sub-13F), filed August 2, 1979, and previously noticed in the Federal Register issue of March 5, 1980. Applicant: MAWSON & MAWSON, INC., P.O. Box 125, Langhorne, PA 19047. Representative: Paul F. Sullivan, 711 Washington Bldg., Washington, DC 20005. Transporting (1) *iron and steel articles,* from the facilities of Bethlehem Steel Corp., (a) at or near Bethlehem, PA, to points in IN, IL, WV, VA, and those points in MI in and south of Oceana, Newaygo, Mecosta, Isabella, Midland, and Bay Counties, MI, (b) at or near Johnstown, PA, to points in OH, NY, MD, DE, IN, IL, CT, MA, RI, and those points in MI in and south of Oceana, Newaygo, Mecosta, Isabella, Midland, and Bay Counties, MI, (c) at or near Steelton, PA, to points in OH, IN, IL, and points in MI in and south of Oceana, Newaygo, Mecosta, Isabella, Midland, and Bay Counties, MI, and (2) *material, equipment, and supplies* (except commodities in bulk), used in the manufacture of the commodities named in (1) above, in the reverse direction. (Hearing site: Philadelphia, PA.)

Note.—This republication is to correctly reflect the territorial description in part (1) of this proceeding.

MC 11207 (Sub-535F), filed March 24, 1980. Applicant: DEATON, INC., 317 Avenue W, P.O. Box 938, Birmingham, AL 35201. Representative: Kim D. Mann, Suite 1010, 7101 Wisconsin Avenue, Washington, DC 20014. Transporting *iron and steel articles,* between points in TX, on the one hand, and, on the other, points in AL, GA, KY, LA, MS, and SC. (Hearing site: Birmingham, AL.)

Note.—The purpose of this application is to eliminate the gateway of Natchez, MS.

MC 11207 (Sub-542F), filed April 9, 1980. Applicant: DEATON, INC., 317 Avenue W, P.O. Box 938, Birmingham, AL 35201. Representative: Kim D. Mann, Suite 1010, 7101 Wisconsin Ave., Washington, DC 20014. Transporting *flat glass,* from the facilities of Guardian Industries, at or near Corsicana, TX to points in the U.S. (except AK and HI). (Hearing site: Dallas, TX or Washington, DC.)

MC 11207 (Sub-543F), filed April 9, 1980. Applicant: DEATON, INC., 317 Avenue W, P.O. Box 938, Birmingham, AL 35201. Representative: Kim D. Mann, Suite 1010, 7101 Wisconsin Ave., Washington, DC 20014. Transporting (1) *pressure vessels, pressure vessel parts and accessories,* (2) *iron and steel articles,* and (3) *shell and tube exchangers,* from Dallas and Houston, TX to points in the U.S. (except AK and HI). (Hearing site: Houston, TX or Washington, DC.)

MC 26396 (Sub-349F), filed March 18, 1980. Applicant: THE WAGGONERS TRUCKING, a corporation, P.O. Box 31357, Billings, MT 59107. Representative: Bradford E. Kistler, P.O. Box 82028, Lincoln, NE 68501. Transporting (1) *solar panels and parts and accessories* used in the installation of the named commodities, from Great Falls, MT, to points in the United States (except AK and HI), and (2) *materials, equipment and supplies* used in the manufacture, distribution and sale of solar panels, in the reverse direction. (Hearing site: Billings, MT.)

MC 26396 (Sub-350F), filed March 4, 1980. Applicant: THE WAGGONERS TRUCKING, a corporation, P.O. Box 31357, Billings, MT 59107. Representative: Barbara S. George (same address as applicant). Transporting *agricultural chemicals* (except in bulk), from points in IL, to points in ID, IA, MN, MT, ND, SD, and WY. (Hearing site: Billings, MT, or Newark, NJ.)

MC 26396 (Sub-351F), filed March 21, 1980. Applicant: THE WAGGONERS TRUCKING, a corporation, P.O. Box 31357, Billings, MT 59107. Representative: Barbara S. George (same address as applicant). Transporting (1) *extruded aluminum products,* from Phoenix, AZ, to points in the U.S. (except AK and HI); and (2) *equipment, materials and supplies* used in the manufacture of commodities in (1) above, in the reverse direction. (Hearing site: Phoenix, AZ, or Billings, MT.)

MC 26396 (Sub-352F), filed March 25, 1980. Applicant: THE WAGGONERS TRUCKING, a corporation, P.O. Box 31357, Billings, MT 59107. Representative: Bradford E. Kistler, P.O. Box 82028, Lincoln, NE 68501. Transporting (1) *steel buildings,* and (2) *materials and supplies* used in the manufacture and distribution of steel buildings, from the facilities of Atlantic Building Systems, Inc., at or near Hannibal, MO, to those points in the U.S. in and west or MN, IA, MO, AR and LA. (Hearing site: St. Louis, MO or Billings, MT.)

MC 29886 (Sub-372F), filed April 9, 1980. Applicant: DALLAS & MAVIS FORWARDING CO., INC., 4314 39th Ave., Kenosha, WI 53142. Representative: Paul F. Sullivan, 711 Washington Bldg., Washington, DC 20005. Transporting *motor vehicles,* from the facilities of AM General Corporation in St. Joseph County, IN, to points in DE, MD, VA, NJ, NY and OH. (Hearing site: Chicago, IL.)

MC 30837 (Sub-497F), filed March 5, 1980. Applicant: KENOSHA AUTO TRANSPORT CORP., 4314 39th Ave., Kenosha, WI 53142. Representative: Paul F. Sullivan, 711 Washington Bldg., N.W., Washington, DC 20005. Transporting *automative springs,* from ports of entry on the international boundary line between the U.S. and Mexico, at or near Eagle Pass, TX, to Detroit, MI. (Hearing site: Detroit, MI.)

MC 35227 (Sub-14F), filed March 18, 1980. Applicant: EDSON EXPRESS, INC., P.O. Box 887, Longmont, CO 80501. Representative: Steele Park, Suite 330, 50 South Steele St, Denver, CO 80209. Over regular routes, transporting *general commodities,* (except those of unusual value, classes A and B explosives, household goods as defined by the Commission, commodities in bulk, and those requiring special equipment) between Ft. Collins, CO, and Worland, WY, serving the intermediate points of Shoshoni and Worland, WY: (1) from Ft. Collins over CO Hwy 14 to junction U.S. Hwy 87 and Interstate 25, then over 25 U.S. Hwy 87 and Interstate 25 to junction U.S. Hwy 20, then over U.S. Hwy 20 to Worland, and return over the same route, and (2) from Ft. Collins over U.S. Hwy 287 to junction Interstate 80 (near Laramie, WY), then over Interstate 80 to junction WY Hwy 789 (near Rawlins, WY), then over WY

Hwy 789 to Worland, and return over the same route. (Hearing site: Worland, WY or Denver, CO.)

MC 51146 (Sub-809F), filed January 24, 1980, erroneously noticed in the Federal Register issue of April 3, 1980, and republished this issue. Applicant: SCHNEIDER TRANSPORT, INC., P.O. Box 2298, Green Bay, WI 54306. Representative: Matthew J. Reid, Jr. (same address as applicant). Transporting (1) *agricultural insecticides or fungicides, weed killing compounds, medicinal feeding compounds, chemicals, drugs, and medicines*, and (2) *materials, equipment, and supplies* used in the manufacture, processing, and distribution of the commodities named in (1) between Kalamazoo, MI, on the one hand, and, on the other, points in the United States (except AK and HI), restricted to the transportation of traffic originating at or destined to the facilities of the Upjohn Company. (Hearing site: Chicago, IL.)

Note.—The purpose of this republication is to correctly state the commodity description.

MC 55896 (Sub-124F), filed October 12, 1979, previously noticed in the Federal Register issue of March 14, 1980. Applicant: R-W SERVICE SYSTEM, INC., 20225 Goodard Rd., Taylor, MI 48180. Representative: John C. Scherbarth, 22375 Haggerty Rd., P.O. Box 400, Northville, MI 48167. Transporting *general commodities* (except those of unusual value, classes A and B explosives, household goods as defined by the Commission, commodities in bulk, and those requiring special equipment), from Chicago, IL, to those points in OH on, south, and west of a line beginning at the OH-IN State line, and extending along U.S. Hwy 30 to junction U.S. Hwy 23, and then along U.S. Hwy 23 to the OH-KY State line. (Hearing site: Detroit, MI.)

Note.—The purpose of this republication is to remove the restriction.

MC 67646 (Sub-90F), filed February 8, 1980, and previously noticed in the Federal Register issue of April 15, 1980. Applicant: HALL'S MOTOR TRANSIT COMPANY, 6060 Carlisle Pike, Mechanicsburg, PA 17055. Representative: John E. Fullerton, 407 N. Front St., Harrisburg, PA 17101. Over regular routes, transporting *general commodities* (except those of unusual value, classes A and B explosives, household goods as defined by the Commission, commodities in bulk, and commodities requiring special equipment), (1) between Randolph, NY, and the junction of U.S. Hwy 15 and NY Hwy 417: From Randolph over NY Hwy 17 to Steamburg, NY (also from Randolph over NY Hwy 394 to Steamburg), then over NY Hwy 17 to its junction with NY Hwy 417, then over NY Hwy 417 to its junction with U.S. Hwy 15, and return over the same route, (2) between Randolph, NY, and the junction of NY Hwy 17, and NY Hwy 415 (formerly U.S. Hwy 15), near Kanona, NY: From Randolph over NY Hwy 17 to its junction with NY Hwy 415, serving in (1) and (2) all intermediate points between Randolph and Olean, NY, including Olean, and the off-route point of Little Valley, NY. (Hearing site: Buffalo, NY, or Washington, DC.)

Note.—This republication is to correctly reflect the territorial description.

MC 76266 (Sub-133F), filed March 24, 1980. Applicant: ADMIRAL-MERCHANTS MOTOR FREIGHT, INC., 215 South 11th St., Minneapolis, MN 55403. Representative: Robert P. Sack, P.O. Box 6010, West St. Paul, MN 55118. Transporting *such commodities* as are dealt in by discount and retail department stores (except commodities in bulk), between those points in the U.S. in and east of ND, SD, NE, CO, OK, TX, restricted to traffic destined to the facilities of Target Stores, Division of Dayton-Hudson Corporation. (Hearing site: St. Paul, MN.)

MC 91306 (Sub-23F), filed January 16, 1980, previously noticed in the Federal Register issue of April 1, 1980. Applicant: JOHNSON BROTHERS TRUCKERS, INC., 1858 9th Ave., N.E., Hickory, NC 28601. Representative: Eric Meierhoefer, 1511 K St., N.W., Suite 423, Washington, DC 20005. Transporting (1)(a) *electrical wiring plugs and receptacles, sockets, electrical switches, extension cords, power supply cords, copper wire*, and (b) *materials and supplies* used in the manufacture thereof, between South Attleboro, MA, and points in RI, on the one hand, and, on the other, Morgantown and West Jefferson, NC, and (2) *plastic materials* (other than expanded), from North Tonawanda and Buffalo, NY, to South Attleboro, MA, Morgantown and West Jefferson, NC, and points in RI. (Hearing site: New York, NY.)

Note.—This republication is to correctly reflect the commodity description.

MC 102567 (Sub-252F), filed April 9, 1980. Applicant: McNAIR TRANSPORT, INC., 4295 Meadow Lane, P.O. Drawer 5357 Bossier City, LA 71111. Representative: Joe C. Day, 13403 Northwest Fwy., Suite 130, Houston, TX 77040. Transporting *petroleum products*, in bulk, in tank vehicles, from Lake Charles, LA, to points in TX. (Hearing site: New Orleans, LA.)

MC 107107 (Sub-484F), filed April 2, 1980. Applicant: ALTERMAN TRANSPORT LINES, INC., 12805 N.W. 42nd Ave., Opa Locka, FL 33054. Representative: Sidney Alterman (same address as applicant). Over regular routes, transporting *general commodities* (except those of unusual value, classes A and B explosives, household goods as defined by the Commission, commodities in bulk, and those requiring special equipment), (1) between Jacksonville and Key West, FL, over U.S. Hwy 1, (2) between Miami and Jacksonville, FL, over Interstate Hwy 95, (3) between Miami and Tallahassee, FL, over U.S. Hwy 27, (4) between Miami and Brooksville, FL, over U.S. Hwy 41, (5) between Miami, FL and the junction of the FL Turnpike and Interstate Hwy 75; from Miami over FL Turnpike to junction Interstate Hwy 75, at or near Wildwood, FL, and return over the same route, (6) between West Palm Beach and Perry, FL, over U.S. Hwy 98, (7) between Tampa and Daytona Beach, FL, over Interstate Hwy 4, (8) between Tampa, FL and junction Interstate Hwy 75 and Interstate Hwy 10; from Tampa over Interstate Hwy 75 to junction Interstate Hwy 10 near Lake City, and return over the same route, (9) between Ocala and Jacksonville, FL, over U.S. Hwy 301, (10) between Jacksonville and Pensacola, over Interstate Hwy 10 and U.S. Hwy 90, and (11) between Orlando and Punta Gorda, over U.S. Hwy 17; serving all intermediate points on routes (1) through (11) and all other points in FL as off-route points. Condition: Issuance of a certificate in this proceeding is subject to prior or concidental cancellation, at applicant's written request, or Certificate MC 107107 Sub-467. (Hearing site: Miami, FL.)

Note.—Applicant already holds authority in MC 107107 Sub-467 to conduct operations over the identical routes. However, its Sub-467 is subject to certain restrictions which this application seeks to eliminate. Applicant intends to tack with its existing authority.

MC 109397 (Sub-506F), filed April 3, 1980. Applicant: TRI-STATE MOTOR TRANSIT CO., a Delaware corporation, P.O. Box 113, Joplin, MO 64801. Representative: A. N. Jacobs (same address as applicant). Transporting *metal buildings*, complete, knocked down, or in sections, and *parts and accessories* for metal buildings, from the facilities of Kirby Buildings Systems, Inc., at or near Portland, TN, to points in the U.S. in and east of MN, IA, MO, AR, and LA. (Hearing site: Nashville, TN.)

MC 112617 (Sub-462F), filed December 17, 1979, previously noticed in the Federal Register issue of March 27, 1980. Applicant: LIQUID TRANSPORTERS, INC., 1292 Fern Valley Rd., P.O. Box 21395, Louisville, KY 40221. Representative: Larry W. Thompson (same address as applicant).

Transporting *liquid petroleum pitch*, in temperature controlled tank vehicles, from the facilities of Warriers Asphalt Co., at Doraville, GA, to the facilities of Union Carbide Corp., Carbon Products, at Greenville, SC. (Hearing site: Louisville, KY, or Washington, DC.)

Note.—The purpose of this republication is to correctly reflect the commodity description.

MC 114896 (Sub-84F), filed March 31, 1980. Applicant: PUROLATOR ARMORED INC., 255 Old New Brunswick Rd., Piscataway, NJ 08854. Representative: Carl T. Kessler (same address as applicant). Contract carrier, transporting *precious metals*, between Indianapolis, IN, Chicago, IL, Newark and Union, NJ and Plainville, MA, under continuing contract(s) with Logistics Operations General Motors Corporation, of Troy, MI. (Hearing site: Washington, DC.)

MC 115667 (Sub-16F), filed October 23, 1979, and previously noticed in the Federal Register issue of March 14, 1980. Applicant: ARROW TRANSPORTATION SYSTEMS, INC., 5658 West Marginal Way SW., Seattle, WA 98171. Representative: Clyde H. MacIver, 1415 Fifth Ave., Suite 1900, Seattle, WA 98171. Transporting *general commodities* (except classes A and B explosives), between points in the commercial zones of Seattle, WA and Portland, OR, restricted to traffic having a prior or subsequent movement by water. (Hearing site: Seattle, WA, or Portland, OR.)

Note.—This republication is to correctly reflect the territorial description in this proceeding.

MC 115826 (Sub-585F), filed April 8, 1980. Applicant: W. J. DIGBY, INC., 6015 East 58th Ave., Commerce City, CO 80022. Representative: Howard Gore (same address as applicant). Transporting (1) *tea*, and (2) *equipment and supplies* used in the manufacture and distribution of tea products, between Denver, CO, on the one hand, and, on the other, points in the U.S. (except AK and HI). (Hearing: Denver, CO.)

MC 116077 (Sub-434F), filed March 11, 1980. Applicant: DSI TRANSPORTS, INC., 4550 Post Oak Place Drive, P.O. Box 1505, Houston, TX 77001. Representative: James M. Doherty, 500 West Sixteenth St., P.O. Box 1945, Austin, TX 78767. Transporting *chemicals*, in bulk, in tank vehicles, from the facilities of E. I. du Pont de Nemours & Co., Inc., at or near Orange and Victoria Counties, TX, to points in the U.S. (except AK and HI). (Hearing site: Houston or Dallas, TX.)

MC 123987 (Sub-35F), filed April 1, 1980. Applicant: JEWETT SCOTT TRUCK LINE, INC., P.O. Box 267, Mangum, OK 73554. Representative: Richard Hubbert, P.O. Box 10236, Lubbock, TX 79408. Transporting *scrap metal, and crushed car bodies*, between points in CA, CO, KS, NE, NM, OK, TX, UT, and WY. (Hearing site: Denver, CO or Oklahoma City, OK.)

MC 124306 (Sub-82F), filed April 4, 1980. Applicant: KENAN TRANSPORT COMPANY, INC., P.O. Box 2729, Chapel Hill, NC 27514. Representative: Richard A. Mehley, 1000 16th St., NW., Washington, DC 20036. Transporting *cement clinker grinding compounds liquid, lignin liquor, crude tall oil, tall oil fatty acid, tall oil pitch, rosin, rosin sizing, tall oil heads, dtall oil other than crude*, from Charleston, SC, to points in AL, FL, GA, MS, NC and VA. (Hearing site: Charleston, SC or Washington, DC.)

MC 126276 (Sub-206F), filed July 20, 1979, and previously noticed in the Federal Register issue of March 6, 1980. Applicant: FAST MOTOR SERVICE, INC., 9100 Plainfield Rd., Brookfield, IL 60513. Representative: James C. Hardman, 33 N. LaSalle St., Chicago, IL 60602. Contract carrier, transporting *such commodities* as are dealt in by manufacturers and distributors of paper and plastic articles, and *materials, equipment and supplies* used in the manufacture and distribution of paper and plastic articles (except commodities in bulk and those which, because of size or weight, require the use of special equipment), between points in the United States (except AK and HI), restricted (1) to movements from or to facilities utilized by the Bondware Division, Continental Diversified Industries, Inc., The Continental Group, Inc., and (2) under continuing contract(s) with The Continental Group, Inc. of Palatine, IL. (Hearing site: Chicago, IL.)

Note.—This republication is to correct the above restrictions in this proceeding.

MC 126736 (Sub-135F), filed March 18, 1980. Applicant: FLORIDA ROCK & TANK LINES, INC., 155 East 21st St., Jacksonville, FL 32206. Representative: Martin Sack, Jr., 1754 Gulf Life Tower, Jacksonville, FL 32207. Transporting *petroleum and petroleum products*, in bulk, in tank vehicles, from Albany, GA to Jacksonville, FL. (Hearing site: Jacksonville, FL.)

MC 128007 (Sub-156F), filed March 4, 1980, previously noticed in the Federal Register issue of May 13, 1980. Applicant: HOFER, INC., 20th & 69 Bypass, P.O. Box 583, Pittsburg, KS. Representative: William B. Barker, 641 Harrison St., P.O. Box 1979, Topeka, KS 66601. Transporting: (1) *aluminum dross and scrap*, (2) *materials and supplies* used in processing the commodities in (1) above, from points in AR, CO, IL, IN, IA, KY, LA, MI, MN, MO, NE, NM, OH, OK, TN, TX, and WI, to the facilities of Pittsburg Aluminum Recycling Company, Inc., at or near Pittsburg, KS; and (3) *aluminum ingots*, in the reverse direction. (Hearing site: Kansas City, MO.)

Note.—The purpose of this republication is to correct (2).

MC 129537 (Sub-27F), filed September 11, 1978. Applicant: REEVES TRANSPORTATION CO., a Florida corporation, Rt. 5—Dews Pond Rd., Calhoun, GA 30701. Representative: John C. Vogt, Jr., 406 N. Morgan St., Tampa, FL 33602. Transporting *carpets and rugs*, from points in Hamilton County, TN, to points in Gordon County, GA, for purpose of tacking said authority to applicant's existing authority, a portion of which originates in Gordon County, GA; and to remove the restrictions against tacking from those portions of applicant's authority described in No. MC-129537, Sub. Nos. 13, 15 and 19. (Hearing site: Tampa, FL.)

MC 133336 (Sub-5F), filed March 25, 1980. Applicant: CAROLINA TRANSIT LINES OF CHARLOTTE, INC., 224 Iverson Way, Charlotte, NC 28203. Representative: Eric Meierhoefer, Suite 423, 1511 K Street, N.W., Washington, DC 20005. Transporting *passengers and their baggage*, in special and charter operations, beginning and ending at points in Mecklenburg County, NC and extending to points in the United States (except AK and HI). (Hearing site: Charlotte, NC.)

MC 133877 (Sub-3F), filed April 8, 1980. Applicant: FRACON TRUCKING CO., INC., 1052 Park Lane North, Franklin Square, NY 11010. Representative: Roy A. Jacobs, 550 Mamaroneck Ave., Harrison, NY 10528. *Contract carrier*, transporting *such commodities* as are dealt in by wholesale drug stores, from Baltimore, MD, to the facilities of Three P Products Corp., at (a) Jamaica, NY, and (b) Philadelphia, PA, under continuing contract(s) with Three P Products Corp. (Hearing site: New York, NY.)

MC 134477 (Sub-414F), filed April 10, 1980. Applicant: SCHANNO TRANSPORTATION, INC., 5 West Mendota Road, West St. Paul, MN 55118. Representative: Thomas D. Fischbach, P.O. Box 43496, St. Paul, MN 55164. Transporting *plastic auto parts* (except commodities in bulk), from Hillsboro, TX to points in MI. (Hearing site: St. Paul, MN.)

MC 135007 (Sub-83F), filed April 9, 1980. Applicant: AMERICAN

TRANSPORT, INC., 7850 "F" Street, Omaha, NE 68127. Representative: Arthur J. Cerra, 2100 TenMain Center, P.O. Box 19251, Kansas City, MO 64141. *Contract carrier,* transporting *meats, meat products, meat byproducts and articles distributed by meat-packing houses,* as described in Sections A and C of Appendix I to the report in *Descriptions in Motor Carrier Certifications,* 61 M.C.C. 209 and 766 (except hides and commodities in bulk) between the facilities of Royal Packing Company at National Stockyards, IL, Wichita, KS, Omaha, NE, St. Louis, St. Joseph and Kansas City, MO, under continuing contract(s) with Royal Packing Company, of National Stockyards, IL. (Hearing site: Omaha, NE.)

MC 135326 (Sub-25F), filed March 17, 1980. Applicant: SOUTHERN GULF TRANSPORT, INC., 4277 N. Market St., P.O. Box 7959, Shreveport, LA 71107. Representative: Hugh T. Matthews, 2340 Fidelity Union Tower, Dallas, TX 75201. Transporting *hardboard and plywood,* from Houston and Galveston, TX to points in TX, OK, AR, and LA. (Hearing site: Dallas, TX.)

MC 135707 (Sub-6F), filed April 3, 1980. Applicant: DIETZ TRUCKING, INC., Rich Hill Rd., Cheswick, PA 15024. Representative: William J. Lavelle, Esq., 2310 Grant Bldg., Pittsburgh, PA 15219. Contract carrier, transporting (1) *steel articles, reinforcing steel, wire mesh, road building materials* (except in bulk), from the facilities of W. N. Dambach, Inc. in Pittsburgh, PA, to points in OH, WV, MD, MI and NY; (2) *steel reinforcing bars, and wire mesh,* from points in OH, WV, MD, MI and NY to the facilities of W. N. Dambach, Inc. in Pittsburgh, PA., under continuing contract(s) with W. N. Dambach, Inc., at Pittsburgh, PA. (Hearing site: Pittsburgh, PA or Washington, DC.)

MC 136816 (Sub-8F), filed March 17, 1980. Applicant: THE UNIVERSE COMPANY, INC., 3523 "L" St., Omaha, NE 68107. Representative: Donald L. Stern, Suite 610, 7171 Mercy Rd., Omaha, NE 68106. Transporting *meats, meat products, meat byproducts and articles distributed by meat packing houses,* as defined in Sections A and C of Appendix I to the report in *Descriptions in Motor Carrier Certificates,* 61 M.C.C. 209 and 766 (except hides and commodities in bulk), from Omaha, NE, to Detroit, MI, and points in NJ, NY, and PA, restricted to the transportation of traffic originating at the named origin and destined to the named destinations. (Hearing site: Omaha, NE.)

MC 138126 (Sub-44F), filed December 31, 1979, previously noticed in the FR issues of March 27, 1980 and May 13, 1980. Applicant: WILLIAMS REFRIGERATED EXPRESS, INC., Old Denton Rd., P.O. Box 47, Federalsburg, MD 21632. Representative: Chester A. Zyblut, 366 Executive Bldg., 1030 Fifteenth St., NW, Washington, DC 20005. Transporting *such commodties as are dealt in by chain grocery stores and food business houses, and materials, equipment, and supplies* used in the manufacture and distribution of the aforementioned commodities (except commodities in bulk), between Omaha, NE, and those points in the United States in and east of MN, IA, MO, AR, and LA, restricted to traffic originating at or destined to the facilities of Campbell Soup Company and its subsidiaries. (Hearing site: Washington, DC.)

Note.—The purpose of this republication is to correct the territorial description.

MC 140186 (Sub-34F), filed May 16, 1979. Applicant: TIGER TRANSPORTATION, INC., 3217 Montana Avenue, Billings, MT 59101. Representative: David A Sutherland, 1150 Connecticut Ave., NW, Suite 400, Washington, DC 20036. Transporting *general commodities* (except those of unusual value, Classes A and B explosives, household goods as defined by the Commission, commodities in bulk, and commodities requiring special equipment), (a) from points in CA, CO, GA, IL, KS, MN, MO, NE NC, OR, UT, WA, and WI to points in MT and WY, and (b) between points in MT and WY, restricted to the transportation of shipments moving on bills of lading of exempt shipping associations operating pursuant to 49 U.S.C. § 10562. (Hearing site: Billings, MT.)

MC 141546 (Sub-32F), filed January 14, 1980. Applicant: BULK TRANSPORT SERVICE, INC., One Dundee Park, Andover, MA 01810. Representative: Kenneth B. Williams, 84 State St., Boston, MA 02109. Transporting *stone dust,* in bulk, from ports of entry on the international boundary line between the United States and Canada in NY to Framingham, MA. (Hearing site: Boston, MA.)

MC 142126 (Sub-8F), filed March 18, 1980. Applicant: FOAM TRANSPORT, INC., 201 Ballardvale St., Wilmington, MA 01887. Representative: Wesley S. Chused, 15 Court Square, Boston, MA 02108. Contract carrier, transporting *such commodities* as are dealt in by retail department stores (except commodities in bulk), from points in GA, IL, MD, NC, NJ, NY, OH, PA, SC, and TN, to Manchester, NJ and points in MA, under continuing contract(s) with Lechmere Sales, of Woburn, MA. (Hearing site: Boston, MA.)

MC 142167 (Sub-6F), filed April 8, 1980. Applicant: MICHAELSEN TRUCK LINE, INC., 1619 South Garfield, Mason City, IA 50401. Representative: Steven C. Schoenebaum, 1200 Register and Tribune Bldg., Des Moines, IA 50309. *Contract carrier,* transporting *soybean meal* (except liquid commodities in bulk, in tank vehicles), from the facilities of AGRI Industries, at or near Mason City, IA, to points in Barron, Buffalo, Chippewa, Columbia, Dane, Door, Eau Claire, Marinette, Marquette, Polk, Racine, Rock, Shawano, Taylor, Washington, and Waushara Counties, WI, under continuing contract(s) with AGRI Industries.

MC 142466 (Sub-3F), filed March 24, 1980. Applicant: TIMBER PRODUCTS TRANSPORT, INC., P.O. Box 1513, Longview, WA 98632. Representative: William H. Grady, 1100 Norton Bldg., Seattle, WA 98104. Transporting *western hardwood, gypsum products, roofing materials, and roofing insulation,* (1) from points in Los Angeles and Orange Counties, CA, to points in Marion County, OR, (2) from Eugene and Roseburg, OR, and those points in WA on and west of U.S. Hwy 97, to Fresno, Union City, San Francisco, and Sacramento, CA, and Reno, NV. (Hearing: Portland, OR, or San Francisco, CA.)

MC 142686 (Sub-42F), filed April 8, 1980. Applicant: MID-WESTERN TRANSPORT, INC., 10506 S. Shoemaker Ave., Sante Fe Springs, CA 90670. Representative: Joseph Fazio (same address as applicant). *Contract carrier,* transporting (1) *chemicals* (except in bulk, in tank vehicles), (2) *machines and machine parts,* and (3) *cartons and containers,* (a) between the facilities of Thiokol/Dynachem Corporation at points in Orange County, CA, on the one hand, and, on the other, Indianapolis and Terre Haute, IN, Elmhurst, IL, Herndon, VA, Charlotte and Matthews, NC, Moss Point, MS, Kearney, NJ, Farmingdale, NY, Woburn and South Hadley Falls, MA, and (b) from Moss Point, MS, to Charlotte and Matthews, NC, and South Hadley Falls, MS, under continuing contract(s) with Thiokol/Dynachem Corporation, of Santa Ana, CA. (Hearing: Los Angeles or San Diego, CA.)

Note.—Dual operations may be involved.

MC 142686 (Sub-43F), filed April 8, 1980. Applicant: MID-WESTERN TRANSPORT, INC., 10506 S. Shoemaker Ave., Santa Fe Springs, CA 90670. Representative: Joseph Fazio (same address as applicant). *Contract carrier,* transporting *such commodities* as are

dealt in by grocery and food business houses, between points in the U.S. (except AK and HI), under continuing contract(s) with Arden Mayfair Markets, of Commerce, CA. (Hearing site: Los Angeles or San Diego, CA.)

Note.—Dual operations may be involved.

MC 142897 (Sub-16F), filed August 22, 1979, previously noticed in the FR issue of March 14, 1980. Applicant: KENNEDY FREIGHT LINES, INC., 7401 Fremont Pike, Perrysburg, OH 43551. Representative: Paul F. Berry, 275 East State St., Columbus, OH 43215. *Contract carrier,* transporting (1) *auto parts, building materials, sporting goods, new furniture, infant articles,* and (2) *materials, equipment and supplies* used in the manufacture or distribution of commodities named in (1) above (except commodities in bulk), between points in the United States (except AK and HI), under continuing contract(s) with Questor Corporation, of Toledo, OH.

Note.—The purpose of this republication is to modify the commodity description.

MC 143246 (Sub-11F), filed April 10, 1980. Applicant: LAND TRANSPORT CORPORATION, 24 Sabrina Road, Wellesley, MA 02181. Representative: James E. Mahoney, 148 State St., Boston, MA 02109. Contract carrier, transporting *footwear* and *materials, supplies and equipment* used in the manufacture and distribution of footwear (except commodities in bulk, in tank vehicles), between points in OH, GA, CT, ME, MA, CA, and NH, on the one hand, and, on the other points in the U.S. (except AK and HI), under continuing contract(s) with The Keds Corporation of Naugatuck, CT, The Joseph M. Herman Shoe Co., Inc. of Scarborough, ME, The Stride Rite Manufacturing Corporation of Boston, MA, The Stride Rite Retail Corporation of Boston, MA, Santa Rosa Shoe Corporation of Santa Rosa, CA and Sperry-Topsider Co., Inc., of Forest Park, GA. (Hearing site: Boston, MA, or Providence, RI.)

MC 143267 (Sub-109F), filed April 9, 1980. Applicant: CARLTON ENTERPRISES, INC., P.O. Box 520, Mantua, OH 44255. Representative: Neal A. Jackson, Esquire, 1156 15th Street, N.W., Washington, D.C. 20005. Transporting *iron and steel articles,* from the facilities of Republic Steel Corporation at or near (1)(a) Niles, Elyria, Warren, Youngstown, Cleveland, Missilon and Canton, OH, (b) Harrisburg, PA, (c) Owego, NY, and (d) Bristol, TN, to points in CT, DE, IL, MD, NJ, NY, and WV, and (2) Buffalo, NY, to points in PA. (Hearing site: Cleveland, OH, or Washington, DC.)

MC 144736 (Sub-2F), filed August 17, 1979, and previously noticed in the FR issue of March 6, 1980. Applicant: ROBINSON TRANSFER COMPANY, INC., 1809 St. James St., Box 25, LaCrosse, WI 54601. Representative: Richard A. Westley, 4506 Regent St., Suite 100, Madison, WI 53705. Transporting (1) *lumber and compressed wood products,* between (a) the facilities of Weyerhaeuser Company, at or near Marshfield, and Independence, WI, and St. Paul, MN, (b) the facilities of Neumann Wood Processors, Inc., at or near LaCrosse, WI, and (c) the facilities of Robert Herbst & Associates, at or near Elk Mound, WI, on the one hand, and, on the other, points in IL, IN, IA, MI, MN, MO, and WI, and (2) *lumber products,* from the facilities of Neumann Wood Processors, Inc., at or near LaCrosse, WI, to points in IL, IN, IA, MI, and MN. (Hearing site: Chicago, IL, or Minneapolis, MN.)

Note.—This republication is to show IL as being a destination point in part (1) of this proceeding.

MC 145557 (Sub-10F), filed March 18, 1980. Applicant: LIBERTY TRANSPORT, INC., P.O. Box 9182, Kansas City, MO 64168. Representative: Tom B. Kretsinger, 20 East Franklin, Liberty, MO 64068. Transporting (1) *foodstuffs,* (2) *such commodities* as are dealt in by retail variety, discount and drug stores, and (3) *wholesale houses* serving such stores, (except frozen commodities in bulk), from the facilities of Colgate Palmolive Co., at or near Kansas City, KS, to Shreveport, Monroe, and Alexandria, LA. (Hearing site: Kansas City, MO.)

MC 146256 (Sub-10F), filed April 9, 1980. Applicant: SHORT LINE TRUCKING CO., INC., P.O. Box 20026, Louisville, KY 40220. Representative: Lavern R. Holdeman, 521 S. 14th St., Suite 500, P.O. Box 81849, Lincoln, NE 68501. Transporting (1) *such commodities* as are dealt in by grocery, drug and foods business houses and (2) *materials, equipment and supplies* used in the manufacture and distribution of the commodities in (1) (except in bulk), (a) between the facilities of A. E. Staley Manufacturing Co., at or near Broadview and Cicero, IL, on the one hand, and, on the other, points in GA, IN, KY (except Louisville), MI, OH and TN, and (b) between the facilities of Hunt-Wesson Foods, Inc., at or near Chicago, IL, and Toledo, OH, on the one hand, and, on the other, points in IN and KY (except Louisville). (Hearing site: Louisville, KY.)

MC 146397 (Sub-2F), filed June 22, 1979, previously noticed in the Federal Register issue of March 6, 1980. Applicant: M.T.I. TRUCKING, INC., 9000 Keystone Crossing, Indianapolis, IN 46420. Representative: Donald W. Smith, P.O. Box 40248, Indianapolis, IN 46420. *Contract carrier,* transporting (1) *such commodities* as are dealt in by manufacturers of glass and plastic products, and (2) *materials, equipment and supplies* used in the manufacture and distribution of the commodities in (1) above, between points in WI, MI, IL, MO, KY, IN, OH, PA, and WV, restricted to traffic originating at or destined to the facilities of Anchor Hocking Corporation at points in the above designated territory, under continuing contract(s) with Anchor Hocking Corporation, of Lancaster, OH. (Hearing site: Columbus, OH.)

Note.—The purpose of this republication is to correct the territorial description.

MC 146646 (Sub-13F), filed July 30, 1979, and previously noticed in the Federal Register issues of March 6, 1980 and May 13, 1980. Applicant: BRISTOW TRUCKING COMPANY, P.O. Box 63558, Birmingham, AL 35217. Representative: Henry Bristow, Jr. (same address as applicant). Transporting (1) *construction materials, and (2) materials and supplies* used in the manufacture and distribution of construction materials (except in bulk), between the facilities of the Celotex Corporation, at or near Port Clinton, OH, on the one hand, and, on the other, points in the United States (except AK and HI). (Hearing site: Tampa, FL, or Birmingham, AL.)

Note.—This republication is to correctly reflect the territorial description.

MC 146646 (Sub-86F), filed April 8, 1980. Applicant: BRISTOW TRUCKING COMPANY, a corporation, P.O. Box 6355 A, Birmingham, AL 35217. Representative: James W. Segrest (same address as applicant). Transporting *such commodities* as are used by or dealt in by manufacturers or distributors of cleaning or purifying products, (except commodities in bulk, in tank vehicles, and those which because of size or weight require the use of special equipment), between the facilities of Blue Cross Laboratories, at or near points in Los Angeles County, CA, on the one hand, and, on the other, points in the U.S. (except AK and HI), restricted to traffic originating at or destined to the facilities of Blue Cross Laboratories. Condition: Person or persons who appear to be engaged in common control of applicant and another regulated carrier must either file an application under 49 U.S.C. 11343(a) of the Interstate Commerce Act, or submit an affidavit indicating why such approval is unnecessary. (Hearing site: Los Angeles, CA, or Birmingham, AL.)

MC 146646 (Sub-87F), filed April 9, 1980. Applicant: BRISTOW TRUCKING

COMPANY, P.O. Box 6355 A, Birmingham, AL 35217. Representative: James W. Segrest (same address as applicant). Transporting *plastic cases and cassettes,* from the facilities of Filam National Plastics, Inc., at or near Los Angeles, CA, to points in the U.S. (except AK and HI). Condition: Person or persons who appear to be engaged in common control of applicant and another regulated carrier must either file an application under 49 U.S.C. 11343(a) of the Interstate Commerce Act, or submit an affidavit indicating why such approval is unnecessary. (Hearing site: Los Angeles, CA, or Birmingham, AL.)

MC 146656 (Sub-6F), filed June 29, 1980, and previously noticed in the Federal Register issue of March 6, 1980. Applicant: KEY WAY TRANSPORT, INC., 820 S. Oldham St., Baltimore, MD 21224. Representative: Gerald K. Gimmel, Suite 145, 4 Professional Drive, Gaithersburg, MD 20760. Contract carrier, transporting *general commodities* (except those of unusual value, commodities in bulk, classes A and B explosives, and commodities requiring the use of special equipment), between the facilities of Key Warehouse Services, Inc., at Baltimore, MD, on the one hand, and, on the other, points in VA, WV, MD, DE, PA, NJ, CT, DC, and those in NY on and south of Interstate Hwy 84, under continuing contract(s) with Key Warehouse Services, Inc., of Baltimore, MD. (Hearing site: Baltimore, MD.)

Note.—This republication is to correctly reflect the territorial description. Dual operations may be involved.

MC 146756 (Sub-3F), filed July 13, 1979, and previously noticed in the Federal Register issue of March 6, 1980. Applicant: WAGNER TRUCKING, INC., 6585 Dawn Way, Inver Grove, MN 55075. Representative: Stanley C. Olsen, Jr., 7400 Metro Blvd., Suite 411, Edina, MN 55435. Transporting (1) *precast concrete,* from Rosemount, MN, to points in IA, NE, ND, and SD, and (2) *building materials,* from St. Paul, MN, to points in IA (except Eagle Grove), IL, IN, ND, SD, and WI. (Hearing site: Minneapolis, MN.)

Note.—The purpose of this republication is to include IL as a destination point in part (2) of this proceeding.

MC 146787 (Sub-6F), filed March 31, 1980. Applicant: DEAN ALBAUGH AND MICKEY ALBAUGH, a partnership, d.b.a. ALBAUGH FARMS, R.R. #2, Ankeny, IA 50021. Representative: Thomas E. Leahy, Jr., 1980 Financial Center, Des Moines, IA 50309. Transporting (1) *wheels, hubs, tires, and brakes and brake parts, spindles, and chemicals* (except in bulk), and (2) *materials, equipment and supplies* used in the manufacture of the commodities in (1) (except commodities in bulk), between Des Moines, IA, Slinger, WI, and Dresden, TN, on the one hand, and, on the other, points in AL, FL, GA, LA, and MS, restricted to traffic originating at or destined to the facilities of Dico Company, Inc. (Hearing site: Omaha, NE, or Kansas City, MO.)

MC 146927 (Sub-11F), filed March 18, 1980. Applicant: DIXIE TRANSPORT INC., P.O. Box 1126, Hattiesburg, MS 39401. Representative: William P. Jackson, Jr., 3426 No. Washington Blvd., P.O. Box 1240, Arlington, VA 22210. Transporting *paper and paper products,* and *materials, equipment and supplies* used in the manufacture and distribution of paper and paper products (except in bulk), between the facilities of Southern Bag Corporation, Ltd., at or near Yazoo City, MS, on the one hand, and, on the other, points in LA. (Hearing site: Washington, DC.)

MC 147117 (Sub-2F), filed August 2, 1979, and previously noticed in the Federal Register issue of March 5, 1980. Applicant: W. B. CUDDEBACK, 1183 Broadway, El Cajon, CA 92021. Representative: Milton W. Flack, 4311 Wilshire Blvd., Suite 300, Los Angeles, CA 90010. *Contract carrier,* transporting (1) *cast iron pipe, cast iron articles, steel pipe nipples, plastic fittings, and stainless steel couplings,* from the facilities of Universal Cast Iron Mfg. Co., at South Gate, CA, to points in the United States (except AK, CA, and HI), and (2) *cast iron pipe,* from points in the United States (except AK and HI) to the facilities of Universal Cast Iron Mfg. Co., at South Gate, CA. (Hearing site: Los Angeles, CA.)

Note.—This republication is to correctly reflect the territorial description.

MC 147186 (Sub-1F), filed April 1, 1980. Applicant: TEUFEL BROTHERS, INC., Inman Ave., Avenel, NJ 07001. Representative: Robert B. Pepper, 168 Woodbridge Ave., Highland Park, NJ 08904. *Contract carrier,* transporting *asphalt emulsion,* in bulk, in tank vehicles, from Whippany, NJ, to points in CT west of the Connecticut River, points in Dutchess, Orange, Putnam, Rockland, Suffolk, Sullivan, Ulster and Westchester Counties, NY, and those in Bradford, Lackawanna, Luzerne, Pike, Susquehanna, Wayne, and Wyoming Counties, PA under continuing contract(s) with Dosch-King of Whippany, NJ. (Hearing site: Newark, NJ.)

MC 147506 (Sub-2F), filed March 8, 1980. Applicant: ACE TRUCK LINE, INC., 2372 Newark, Aurora, CO 80010. Representative: Edward C. Hastings, 666 Sherman St., Denver, CO 80203. *Contract carrier,* transporting *meats, frozen foodstuffs,* and *restaurant equipment and supplies,* from Chicago, IL, to Denver, CO, under continuing contract(s) with Nobel, Inc., of Denver, CO. (Hearing site: Denver, CO.)

MC 147716F, filed June 28, 1979, previously noticed in the Federal Register issue of March 18, 1980. Applicant: OVERLAND TRANSPORT, INC., 904 Wright Ave. #28, Richmond, CA 94804. Representative: James H. Gulseth, 100 Bush St., 21st Fl., San Francisco, CA 94104. Transporting (1) *animal feed and animal feed ingredients, supplements,* and *additives,* and *materials* used in the manufacture and sale of animal feed, between the facilities of Kal Kan Foods, Inc., at or near Ogden and Salt Lake City, UT, on the one hand, and, on the other, points in CA, OR, and WA (2)(a) *such commodities* as are dealt in by wholesale and retail groceries, food businesses, drug, discount and variety houses, (b) *equipment, materials* and *supplies* used in the conduct of such businesses; and (c) *general commodities* in mixed loads with commodities in (a) and (b), between the facilities of Colgate Palmolive Co. in Alameda County, CA, on the one hand, and, on the other, points in UT and NV. (Hearing site: San Francisco, CA.)

Note.—The purpose of this republication is to correctly show the state as OR in (1), which was published as OK.

MC 148527F, filed October 9, 1979, previously noticed in the Federal Register issues of March 14, 1980, and May 13, 1980, and republished this issue. Applicant: H. BRUCE BAGLEY AND C. E. BAGLEY, a partnership, d.b.a. BAGLEY & SON, Route 6, Box 485-A, Anderson, IN 46011. Representative: Donald W. Smith, P.O. Box 40248, Indianapolis, IN 46240. Contract carrier, transporting *batteries and battery parts,* and *materials* used in the manufacture of batteries, (1) between the facilities of Prime Batteries, Inc., at Anderson, IN, on the one hand, and, on the other, points in KY, OH, TN, WI, IL, GA, MS, AL, SC, TX, NC, MO, MI, LA, and AR, and (2) between the facilities of Western Kentucky Batteries, Inc., at Benton, KY, on the one hand, and, on the other, points in KY, OH, TN, WI, IL, GA, MS, AL, SC, TX, NC, MO, MI, LA, and AR, under continuing contract(s) in (1) above with Prime Batteries, Inc., and in (2) above with Western Kentucky, Batteries, Inc. (Hearing site: Indianapolis, IN.)

Note.—The purpose of this republication is to correctly state the territorial description in (1) and (2) above.

MC 149017 (Sub-2F), filed March 24, 1980. Applicant: AIRWAYS SPECIAL DELIVERY, INC., 8356 West Cristina Ave., Orland Park, IL 60462. Representative: Irwin D. Rosner, 134 North LaSalle St., Chicago, IL 60602. *Contract carrier* transporting *such commodities* as are used in manufacture, distribution, and maintenance of agricultural equipment, heavy machinery, fork lift trucks, and internal combustion engines, between the facilities of Allis Chalmers, at Matterson, IL, on the one hand, and, on the other, points in IN, MI, OH, and WI, under continuing contract(s) with Allis Chalmers, of Matterson, IL. (Hearing site: Chicago, IL.)

Volume No. 202

Decided: June 10, 1980.

By the Commission, Review Board Number 3, Members Parker, Fortier, and Hill.

MC 32882 (Sub-146F), filed April 11, 1980. Applicant: MITCHELL BROS. TRUCK LINES, 3841 North Columbia Blvd., Portland, OR 97217. Representative: David J. Lister, P.O. Box 17039, Portland, OR 97217. Transporting (1) *Tote pans, refrigeration tunnels, and air vents,* from Davis County, UT, to points in the U.S. (except AK and HI) and (2) *materials, equipment and supplies used in the manufacture of commodities in (1) above* (except commodities in bulk) from points in the U.S. (except AK and HI) to points in Davis County, UT. Restricted to traffic originating at or destined to the facilities of Aero Tech Mfg., Inc. (Hearing site: Salt Lake City, UT.)

Note.—Common control may be involved.

MC 32882 (Sub-147F), filed April 11, 1980. Applicant: MITCHELL BROS. TRUCK LINES, 3841 North Columbia Boulevard, Portland, OR 97217. Representative: David J. Lister, P.O. Box 17039, Portland, OR 97217. Transporting: (1) *Fiberglass Products,* and (2) *Materials, equipment and supplies used in the manufacture and distribution of commodities in (1) above,* (except commodities in bulk) between Salt Lake County, UT on the one hand, and, on the other, points in the U.S. (except AK and HI). Restricted to traffic originating at or destined to the facilities of Intermountain Design, Inc. (Hearing site: Salt Lake City, UT.)

Note.—Common control may be involved.

MC 52793 (Sub-64F), filed April 9, 1980. Applicant: BEKINS VAN LINES CO., 3090 Via Mondo, Compton, CA 90221. Representative: Edward G. Villalon, 1032 Pennsylvania Building, Pennsylvania Ave. and 13th St. NW., Washington, D.C. 20004. Transporting *(1) Artificial trees, shrubbery, wreath decorations and ornaments; (2) venetian blinds; (3) metal and plastic lawn and garden items; and (4) parts, materials, supplies, equipment and machinery* used or useful in the fabrication, manufacture or distribution of the items in (1), (2) or (3) above, between the facilities of Marathon Carey-McFall Company in PA, GA and TX, on the one hand, and points in the U.S. (except AK and HI). (Hearing site: Philadelphia, PA, or Washington, DC.)

MC 94393 (Sub-10F), filed March 28, 1980. Applicant: W. J. CASEY TRUCKING & RIGGING CO., INC., 1200 Springfield Road, Union, NJ 07083. Representative: George A. Olsen, P.O. Box 357, Gladstone, NJ 07934. Transporting *Such commodities as are used in the manufacture, servicing, refurbishing and supplying of steamships,* between New York, NY; Baltimore, MD; Philadelphia, PA; New Orleans, LA; and Jacksonville, FL, on the one hand, and, on the other, points in the U.S. (except HI). (Hearing site: New York, NY or Washington, DC.)

MC 107403 (Sub-1329F), filed April 7, 1980. Applicant: MATLACK, INC., 10 W. Baltimore Ave., Lansdowne, PA 19050. Representative: Martin C. Hynes, Jr., (same address as applicant).Transporting *vegetable oil and vegetable oil products,* in bulk, in tank vehicles, between Opelousas, LA, on the one hand, and, on the other, points in the U.S. (except AK and HI). (Hearing site: Washington, DC.)

MC 109533 (Sub-126F), filed April 11, 1980. Applicant: OVERNITE TRANSPORTATION COMPANY, 1000 Semmes Avenue, Richmond, VA 23224. Representative: C. H. Swanson, P.O. Box 1216, Richmond, VA 23209. Transporting *General commodities,* (except those of unusual value, classes A and B explosives, household goods as defined by the Commission, commodities in bulk and those requiring special equipment) serving the facilities of Kimberly-Clark Corp. at or near McBean, GA, as an off-route point in connection with carriers regular route authority. (Hearing site: Augusta or Atlanta, GA.)

MC 111302 (Sub-170F), filed April 11, 1980. Applicant: HIGHWAY TRANSPORT, INC., P.O. Box 10108, Knoxville, TN 37919. Representative: David A. Petersen (same address as applicant). Transporting *commodities,* in bulk, in tank vehicles, between points in the U.S. (except AK and HI), restricted to traffic originating at or destined to the facilities of Union Camp Corporation. (Hearing site: Washington, DC.)

MC 112713 (Sub-300F), filed April 7, 1980. Applicant: YELLOW FREIGHT SYSTEM, INC., P.O. Box 7270, Overland Park, KS 66207. Representative: Robert E. DeLand, P.O. Box 7270, Overland Park, KS 66207. Transporting: *General commodities* (except household goods as defined by the Commission, commodities of unusual value, those requiring special equipment, commodities in bulk and Classes A and B explosives), between Mankato, MN and Winona, MN over US Hwy 14 serving all intermediate points. (Hearing site: Minneapolis, MN; Kansas City, MO.)

Note.—Common control may be involved.

MC 112713 (Sub-301F), filed April 9, 1980. Applicant: YELLOW FREIGHT SYSTEM, INC., P.O. Box 7270, Overland Park, KS 66207. Representative: Robert E. DeLand, P.O. Box 7270, Overland Park, KS 66207. Transporting: *General commodities* (except commodities of unusual value, Classes A and B explosives, household goods as defined by the Commission, commodities in bulk, and those requiring special equipment) serving the mine sites and facilities of Duval Sales Corp., Asarco, Inc., Cyprus Pima Mining Company, and Anamax Mining Co. in Pima County, AZ, as off-route points in connection with carrier's otherwise authorized operations. Common control may be involved. (Hearing site: Phoenix, AZ; Los Angeles, CA.)

MC 113362 (Sub-388F), filed April 7, 1980. Applicant: ELLSWORTH FREIGHT LINES, INC., 310 East Broadway, Eagle Grove, IA 50533. Representative: Milton D. Adams, P.O. Box 429, Austin, MN 55912. Transporting (1) *Petroleum products, and synthetic lubricating oil (except in bulk)* (2) *automobile parts and accessories, and* (3) *such commodities* as are used or dealt in by retail fuel stations and automobile service centers, between the facilities of Exxon Company, USA, at or near Bayonne, and Bayway, NJ; Baton Rouge, LA; Baytown, TX; and Pittsburgh, PA, on the one hand, and, on the other, points in the U.S. (except AK and HI). (Hearing site: Houston, TX or Dallas, TX.)

MC 114632 (Sub-285F), filed April 10, 1980. Applicant: APPLE LINES, INC., P.O. Box 287, Madison, SD 57042. Representative: David E. Peterson, P.O. Box 287, Madison, SD 57042. Transporting *general commodities,* between points in IL, IN, KY, MI, and OH, on the one hand, and, on the other, points in AR, IL, KS, MN, MO, OK, CO, IA, NE, and WI. Restricted to traffic moving on bills of lading of freight forwarders. (Hearing site: Cincinnati, OH, or Chicago, IL.)

MC 114632 (Sub-287F), filed April 9, 1980. Applicant: APPLE LINES, INC., P.O. Box 287, Madison, SD 57042. Representative: David E. Peterson, P.O. Box 287, Madison, SD 57042. Transporting *general commodities*, between Joplin, MO, Galena, KS, Mineola, TX, Hillsboro, IL, Fairbury, NE, and Cedartown, GA, on the one hand, and, on the other, points in the U.S. in and east of ID, UT, CO, and NM. Restricted to traffic originating at or destined to the facilities of Eagle-Picher Industries, Inc. (Hearing site: Kansas City, MO, or Minneapolis, MN.)

MC 116632 (Sub-28E), filed April 8, 1980. Applicant: H. O. BOUCHARD, INC., MRC Box 141 A, Bangor, ME 04401. Representative: John R. McKernan, Jr., Two Canal Plaza, P.O. Box 586, Portland, ME 04112. Transporting *lumber, shingles,* and *lathes* from points in Androscoggin, Cumberland, Franklin, Kennebec, Knox, Lincoln, Oxford, Sagadahoc, Somerset, Waldo, and York Counties, ME, to points in NH, VT, MA, CT, RI, NY, NJ, PA, MD, DE, and OH. (Hearing site: Portland, ME, or Boston, MA.)

MC 117142 (Sub-4F), filed April 10, 1980. Applicant: AMERICAN TRAILER HAUL, INC., 609B South Main Street, Woodstock, GA 30188. Representatives: Archie B. Culbreth and John P. Tucker, Jr., Suite 202, 2200 Century Parkway, Atlanta, GA 30345. Transporting (1) *trailers* designed to be drawn by passenger automobiles; (2) *double-wides,* (3) *portable buildings* moving on undercarriages, between points in AL, FL, GA, MS, NC, SC, and TN. (Hearing site: Atlanta, GA.)

MC 118202 (Sub-154F), filed April 7, 1980. Applicant: SCHULTZ TRANSIT, INC., P.O. Box 406, 323 Bridge street, Winona, MN 55987. Representative: Robert S. Lee, 1000 First National Bank Bldg., Minneapolis, MN 55402. Transporting: *Paper and Paper Products;* from the facilities of Gilman Paper Company at Hazelwood, MO, to points in IL, IN, IA, KS, KY, MI, MN, NE, ND, OH, SD and WI. (Hearing site: St. Louis, MO or Kansas City, MO.)

MC 119632 (Sub-116F), filed April 7, 1980. Applicant: REED LINES, INC., 634 Ralston Avenue, Defiance, OH 43512. Representative: Wayne C. Pence (same as applicant). Transporting (1) *Cleaning compounds, bleach, textile softeners, starch, aqua ammonia and detergents;* and (2) *materials, equipment and supplies used or useful in the manufacture, production, and distribution of commodities in (1) above* (except commodities in bulk) between points in DC, DE, IL, IN, KY, MD, Lower Peninsula of MI, MO, NJ, NY, OH, PA, VA and WV. Restricted to the transportation of shipments originating at or destined to facilities of Purex Corporation. (Hearing site: Toledo or Columbus, OH.)

MC 124813 (Sub-225F), filed April 14, 1980. Applicant: UMTHUN TRUCKING CO., 910 South Jackson Street, Eagle Grove, IA 50533. Representative: William L. Fairbank, 1980 Financial Center, Des Moines, IA 50309. Transporting: *Materials and supplies* used in the manufacture and distribution of cast iron products between the facilities of Griffin Pipe Products Co. in Pottawattamie County, IA, on the one hand, and, on the other, points in the U.S. in and west of MI, IN, IL, MO, AR and TX (except AK and HI). (Hearing site: Chicago, IL, or Omaha, NE.)

MC 125433 (Sub-409F), filed April 7, 1980. Applicant: F-B TRUCK LINE COMPANY, 1945 South Redwood Road, Salt Lake City, UT 84104. Representative: John B. Anderson (same as applicant). Transporting (1) *torches and welders* and (2) *accessories and supplies used in connection with torches and welders;* from Irwindale, CA, to points in the U.S. (except AK and HI). Restricted to traffic originating at the facilities of Cleanweld Products, Inc. (Hearing site: Los Angeles, CA.)

MC 127303 (Sub-78F), filed April 9, 1980. Applicant: ZELLMER TRUCK LINES, INC., P.O. Box 343, Granville, IL 61326. Representative: E. Stephen Heisley, 805 McLachlen Bank Building, 666 Eleventh Street, NW., Washington, DC 20001. Transporting *carbonated beverages,* from Lenexa, KS to points in IA, IL, MN, ND, SD, and WI. (Hearing site: Kansas City, KS.)

MC 128302 (Sub-15F), filed April 9, 1980. Applicant: THE MANFREDI MOTOR TRANSIT CO., 11250 Kinsman Road, Newbury, OH 44065. Representative: John P. McMahon, 100 East Broad Street, Columbus OH 43215. Transporting *can coating compounds, paint, paint products, latex,* and *resins,* in bulk in tank vehicles, between the facilities of SCM Corporation at or near Columbus, GA, on the one hand, and, on the other, points in the U.S. (except AK and HI.) (Hearing site: Columbus, OH.)

MC 133733 (Sub-4F), filed April 8, 1980. Applicant: CERTIFIED TRANSFER & STORAGE, INC., 5807 Ybarra Court, El Paso, TX 79905. Representative: W. G. Waide (same address as applicant). Transporting *Foodstuffs,* (except in bulk), between El Paso, TX and White Sands Missile Range and Holloman Air Force Base, NM. (Hearing site: El Paso, TX.)

MC 135805 (Sub-13F), filed April 7, 1980. Applicant: WALLACE TRANSPORT, 9290 E. Hwy. 140, P.O. Box 67, Planada, CA 95365. Representative: John C. Russell, 1545 Wilshire Blvd., Los Angeles, CA 90017. Transporting: *Plastic articles, paper articles and bakey goods,* between points in AZ, CA and NV, restricted to traffic originating at facilities of Sweetheart Cup Corp. (Hearing site: Los Angeles, CA.)

MC 136343 (Sub-216F), filed April 11, 1980. Applicant: MILTON TRANSPORTATION, INC, P.O. Box 355, Milton, PA 17847. Representative: Herbert R. Nurick, Esq., P.O. Box 1166, Harrisburg, PA 17108. *Alluminum and zinc alloy ingots* from Maple Heights, OH, to points in the U.S. in and east of ND, SD, NE, KS, OK and TX. (Hearing site: Columbus, OH; Washington, DC.)

MC 138432 (Sub-19F), filed April 9, 1980. Applicant: GARLAND GEHRKE 1800 N. Jefferson, Lincoln, IL 61656. Representative: James R. Madler, 120 W. Madison St., Chicago, IL 60602. Transporting (1) *paper and paper products; cellulose products; plastic products and articles;* and (2) *materials, equipment and supplies* used in the manufacture, assembly, conversion or distribution of commodities named in (1) (except in bulk), between points in the US (except AK and HI). Restricted to the transportation of shipments moving from, to or between the facilities of Crown Zellerbach. (Hearing site: St. Louis, MO.)

MC 139482 (Sub-175), filed April 7, 1980. Applicant: NEW ULM FREIGHT LINES, INC., Post Office Box 877, New Ulm, MN 56073. Representative: Samuel Rubenstein, Post Office Box 5, Minneapolis, MN 55440. Transporting: *carbon steel, stainless steel, brass, copper, bronze and aluminum,* between points in FL, IL, IN, MI, MN, MO, PA, and WI. (Hearing site: Minneapolis or St. Paul, MN.)

MC 139482 (Sub-176F), filed April 10, 1980. Applicant: NEW ULM FREIGHT LINES, INC., P.O. Box 877, New Ulm, MN 56073. Representative: James E. Ballenthin, 630 Osborn Building, St. Paul, MN 55102. Transporting: *General commodities* (except commodities in bulk), between points in MI, MN, MO, WI, IL, IA, ND, SD, and MT. Restricted to traffic originating at or destined to the facilities of or used by Montgomery Ward. (Hearing site: St. Paul, MN.)

MC 142452 (Sub-3F), filed April 9, 1980. Applicant: RIMAR TRANSPORT, INC., 850 Curie Road, North Brunswick, NJ 08902. Representative: E. Stephen Heisley, 805 McLachlen Bank Building, 666 Eleventh Street, NW, Washington,

DC 20001. *Contract carrier,* transporting (1) *such commodities as are dealt in by manufacturers of pipe, conduit, and aluminum insulating panels* and, (2) *materials, equipment, and supplies* used in connection with the manufacture and distribution of commodities in (1) (except commodities in bulk, in tank vehicles), between the facilities of TPCO, Inc., subsidiary of Triangle Industries, Inc., at Lake Bluff, IL and Monmouth Jct., NJ, on the one hand, and, on the other, points in the U.S. (except AK and HI), under a continuing contract(s) with TPCO, Inc., Monmouth Jct., NJ. (Hearing site: Trenton, NJ.)

MC 142672 (Sub-129F), filed April 7, 1980. Applicant: DAVID BENEUX PRODUCE & TRUCKING, INC., Post Office Drawer F, Mulberry, AR 72947. Representative: Don Garrison, Esq., Post Office Box 1065, Fayetteville, AR 72701. Transporting (1) *bananas* and (2) *commodities otherwise exempt from economic regulation when transported in mixed loads with bananas,* from Albany, NY; Port Newark, NJ; and Baltimore, MD, to points in IA, IL, IN, KY, MI, MO, OH and WI. (Hearing site: Jersey City, NJ or Ft. Smith, AR.)

MC 142672 (Sub-130F), filed April 10, 1980. Applicant: DAVID BENEUX PRODUCE & TRUCKING, INC., Post Office Drawer F, Mulberry, AR 72947. Representative: Don Garrison, Esq., Post Office Box 1065, Fayetteville, AR 72701. Transporting *new wooden furniture,* in cartons, from Trumann, AR, to points in AZ, CA, CO, ID, MT, NV, NM, OR, UT, WA and WY. (Hearing site: Ft. Smith, AR.)

MC 143103 (Sub-9F), filed April 17, 1980. Applicant: CHEROKEE LINES, INC., P.O. Box 152, Cushing, OK 74023. Representative: Donald L. Stern, Suite 610, 7171 Mercy Road, Omaha, NE 68106. *Contract carrier,* transporting: *(1) such commodities as are dealt in by drug stores, grocery, and food business houses, and (2) materials, equipment and supplies used in the manufacture and distribution of the commodities listed in (1) above,* between points in the U.S. (except AK and HI), restricted to traffic originating at or destined to facilities of Warner-Lambert Company, and subsidiaries. (Hearing site: Washington, DC or New York City, NY.)

MC 143503 (Sub-33F), filed April 10, 1980. Applicant: MERCHANTS HOME DELIVERY SERVICE, INC., P.O. Box 5067, Oxnard, CA 93031. Representative: T. M. Brown, Morgan Brown & Schneider, P.O. Box 1540, Edmond, OK 73034. Transporting: *New furniture, furnishings,* and *appliances,* from Chattanooga, TN, to points in Blount, Cherokee, Cullman, Dekalb, Etowah, Jackson, Limestone, Madison, Marshall, and Morgan counties, AL; Bartow, Catoosa, Chattooga, Cherokee, Cobb, Dawson, Dade, Fannin, Floyd, Fulton, Gilmer, Gordon, Hall, Haralson, Lumpkin, Murray, Paulding, Pickens, Polk, Rabun, Towns, Union, White, Whitfield, and Walker counties, GA; and Cherokee, Clay, Graham, Jackson, Macon and Swain counties, NC. (Hearing site: Chattanooga, TN or Los Angeles, CA.)

MC 144622 (Sub-162F), filed April 7, 1980. Applicant: GLENN BROTHERS TRUCKING, INC., P.O. Box 9343, Little Rock, AR 72219. Representative: Phillip G. Glenn (same address as applicant). Transporting: *inedible meat by-products* from the facilities of Consolidated Pet Foods, at or near Amarillo, TX, to Livingston, Long Beach, San Diego, CA; St. Joseph, MO; Muscatine, IA, and points in LA, IL, KS, IN, NB, CO, and OH. (Hearing site: Little Rock, AR.)

MC 144622 (Sub-163F), filed April 8, 1980. Applicant: GLENN BROTHERS TRUCKING, INC., P.O. Box 9343, Little Rock, AR 72219. Representative: Phillip G. Glenn (same address as applicant). Transporting: *such merchandise as is sold and used by wholesale, retail and discount stores (except commodities in bulk in tank vehicles)* between Jackson, TN, on the one hand, and, on the other hand, points in CA, CT, DE, ID, KY, ME, MD, MA, MT, NV, NH, NJ, NC, NM, NY, ND, OR, PA, RI, SC, SD, UT, VT, VA, WA, WV and WY. (Hearing site: Little Rock, AR.)

MC 144622 (Sub-164F), filed April 11, 1980. Applicant: GLENN BROTHERS TRUCKING, INC., P.O. Box 9343, Little Rock, AR 72219. Representative: Phillip G. Glenn (same address as applicant). Transporting: (1) *polyurethane resins and vinyl resins,* and (2) *toys,* and (3) *materials used in the manufacture and distribution of toys (except commodities in bulk)* between the facilities of Sun Products at or near Carrolton, GA, on the one hand, and, on the other hand, points in the U.S. (except AK and HI). (Hearing site: Little Rock, AR.)

MC 145152 (Sub-187F), filed April 7, 1980. Applicant: BIG THREE TRANSPORTATION, INC., Post Office Box 706, Springdale, AR 72764. Representative: Don Garrison, Esq., Post Office Box 1065, Fayetteville, AR 72701. Transporting: *Office partitions, school furniture, lockers and shelving* from points in AL, IL, MI, MO, MS, OH, TN, TX and WI, to the facilities of Northern Corporation, at or near Woburn, MA. (Hearing site: Boston, MA or Fayetteville, AR.)

MC 145152 (Sub-188F), filed April 7, 1980. Applicant: BIG THREE TRANSPORTATION, INC., Post Office Box 706, Springdale, AR 72764. Representative: Don Garrison, Esq., Post Office Box 1065, Fayetteville, AR 72701. Transporting: *inedible fatty acid of animal oil; fatty acid of vegetable oil; stearic acid, azelaic acid; pelargonic acid; chemicals; organic ammonia compounds; esters; glycerines; lubricating oils; petroleum oil; flakes (plastic, pellets or solid); liquid plastic; candle tar; wax; resin plasticizer and cleaning compounds (except in bulk),* from Los Angeles, CA and Cincinnati, OH, to points in the U.S. (except AK and HI) restricted to traffic originating at the facilities of Emery Industries, Inc., (Hearing site: Cincinnati, OH or Fayetteville, AR.)

MC 145152 (Sub-189F), filed April 10, 1980. Applicant: BIG THREE TRANSPORTATION, INC., Post Office Box 706, Springdale, AR 72764. Representative: Don Garrison, Esq., Post Office Box 706, Fayetteville, AR 72701. Transporting: *plastic bottles* from Itasca, IL, to the facilities of St. Louis Crystal Water Company, at or near St. Louis, MO. (Hearing site: St. Louis, MO or Fayetteville, AR.)

MC 145152 (Sub-190F), filed April 10, 1980. Applicant: BIG THREE TRANSPORTATION, INC., Post Office Box 706, Springdale, AR 72764. Representative: Don Garrison, Esq., Post Office Box 1065, Fayetteville, AR 72701. Transporting: *candy* between the facilities of Tyler Candy Company, Inc., at or near Tyler, TX, on the one hand, and, on the other, points in AR, LA, and OK. (Hearing site: Dallas, TX or Fayetteville, AR.)

MC 145152 (Sub-191F), filed April 7, 1980. Applicant: BIG THREE TRANSPORTATION, INC., Post Office Box 706, Springdale, AR 72764. Representative: Don Garrison, Esq., Post Office Box 1065, Fayetteville, AR 72701. Transporting: *Candy* from the facilities of Ce De Candy Company at or near Union, NJ to Vernon, CA; St. Louis, MO; Salt Lake City, UT; and Farrington, TX. (Hearing site: Union, NJ or Fayetteville, AR.)

MC 145702 (Sub-6F), filed April 9, 1980. Applicant: TRANSURFACE CARRIERS, INC., P.O. Box 271, Northboro, MA 01532. Representative: Bernard P. Rome, 31 Milk Street, Boston, MA 02109. *Contract carrier,* transporting: (1) *Such commodities as are used or dealt in by wholesale and retail chain stores,* (except in bulk), (2) *such commodities as are used in the manufacture of food and beverage products* (except in bulk), (3) *such commodities as are used in the manufacture of industrial, agricultural,*

building, pharmaceutical, and household products (except in bulk), (4) *feed ingredients, animal health products, and pesticides* (except in bulk), (5) *medical and health care products* (except in bulk), and (6) *materials, equipment, and supplies used in the manufacture and distribution of the commodities described in (1) through (5) above* (except in bulk), between points in the U.S. (except HI), on the one hand, and on the other, facilities of Pfizer, Inc. and Quigley Company, Inc. at points in the U.S. (except HI), under continuing contract(s) with Pfizer, Inc. of New York, NY and Quigley Company, Inc. of New York, NY. (Hearing site: Washington, DC; Boston, MA; or New York, NY.)

MC 146632 (Sub-2F), filed April 8, 1980. Applicant: BETS TRUCK LEASING, INC., P.O. Box 1050, Bennington, Vermont 05201. Representative: James M. Burns, 1383 Main Street, Suite 413, Springfield, MA 01103. *Contract carrier* transporting (1) *molded plastic parts* and (2) *equipment, materials and supplies used in the manufacture of molded plastic parts*, between points in VT and points in the U.S. in and east of MT, WY, CO and AZ under a continuing contract(s) with Mack Molding Company, Arlington, VT. (Hearing site: Hartford, CT or Washington, DC.)

MC 146643 (Sub-39F), filed April 16, 1980. Applicant: INTER-FREIGHT TRANSPORTATION, INC., formerly known as David Creech Transportation Systems, Inc., 655 East 114th Street, Chicago, IL 60628. Representative: Donald B. Levine, 39 S. LaSalle St., Chicago, IL 60603. *Contract carrier*; transporting: *Flour (except in bulk)*, from the facilities of the Pillsbury Company, at or near Minneapolis, MN, to points in IL, IN, MI, MO, OH and WI. (Hearing site: Chicago, IL.)

MC 146643 (Sub-40F), filed April 17, 1980. Applicant: INTER-FREIGHT TRANSPORTATION, INC., formerly known as David Creech Transportation Systems, Inc., 655 East 114th St., Chicago, IL 60628. Representative: Donald B. Levine, 39 South LaSalle St., Chicago, IL 60603. *Contract carrier*; transporting: *pulpboard boxes; and pulpboard sheets*; between St. Regis Paper Co., at or near Dubuque, IA, on the one hand, and, on the other, points in IL, IN, MN, MO, OH and WI. (Hearing site: Chicago, IL.)

MC 146772 (Sub-2F), filed April 17, 1980. Applicant: GRINNELL HAULERS, INC., Houses Corner Road, Sparta, NJ 07871. Representative: 3288 Route 27, P.O. Box 9, Kendall Park, NJ 08824. *Contract carrier* transporting *zinc ore and/or zinc ore concentrate* (except in liquid in bulk) from Ogdensburg, to Palmerton, PA. (Hearing site: Newark, NJ, or New York, NY.)

MC 147062 (Sub-10F), filed April 11, 1980. Applicant: EXPRESS TRANSPORTATION COMPANY, P.O. Box 789, Chattanooga, TN 37401. Representative: Ralph B. Matthews, P.O. Box 872, Atlanta, GA 30301. *General commodities* (except those of unusual value, Classes A and B explosives, household goods as defined by the Commission, commodities in bulk, and those requiring the use of special equipment) between the facilities of Express Transportation Company and rail piggyback ramps at Atlanta, GA; Birmingham, AL; Chattanooga, Knoxville, and Nashville, TN, on the one hand, and, on the other, points in AL, GA, and TN. (Hearing sites: Atlanta, GA and Chattanooga, TN.)

MC 150193 (Sub-1F), filed April 11, 1980. Applicant: DARICA TRUCKING CO., INC., 338 S. Oliver Street, Elberton, GA 30635. Representative: Bruce E. Mitchell, Esquire, Suite 520, Lenox Towers South, 3390 Peachtree Road, NE., Atlanta, GA 30326. *Lumber and plywood* between the facilities of Woodkraft, Incorporated at or near Madison, GA, and Greenville, GA, on the one hand, and, on the other, points in the U.S. in and east of MN, IA, NE, KS, OK and TX (Hearing site: Atlanta, GA.)

MC 150542, filed April 16, 1980. Applicant: RIDGEFIELD PARK TRANSPORT CO., INC., 106 Teaneck Road, Ridgefield Park, NJ 07660. Representative: Michael R. Werner, 167 Fairfield Road, P.O. Box 1409, Fairfield, NJ 07006. *Contract carrier*, transporting (1) *empty containers*, (2) *lids and ends for empty containers*, and (3) *materials, supplies and equipment* used in the manufacture, distribution and sale of the commodities in (1) and (2) and (3) *soft drink products* between points in MI on the one hand, and, on the other, points in the U.S., under continuing contract(s) with Diversifield Containers, Inc. and Pesi-Cola Metropolitan Bottling Co. (Hearing site: New York, NY.)

MC 150612F, filed April 8, 1980. Applicant: RHODES TRUCK AND TRACTOR, INC., 215 Highway 45 South, Corinth, MS 38834. Representative: John Davidson, Box 1456, 111 Highway 72 West, Corinth, MS 38834. Transporting *sawmill machinery and parts*, between Corinth, MS, on the one hand, and, on the other, points in the U.S. (Hearing site: Corinth, MS, or Memphis, TN.)

Volume No. 216

Decided: June 9, 1980.

By the Commission, Review Board Number 2, Members Chandler, Eaton, and Liberman.

MC 1263 (Sub-36F), filed March 25, 1980. Applicant: McCARTY TRUCK LINE, INC., 17th & Harris Ave., Trenton, MO 64683. Representative: James M. McCarty (same address as applicant). Transporting *general commodities* (except those of unusual value, classes A and B explosives, commodities in bulk, and those requiring special equipment) from Kansas City, KS, to Allerton, IA. (Hearing site: Kansas City, MO.)

MC 9153 (Sub-7F), filed April 4, 1980. Applicant: J. R. CHRISTONI, INC., North Cherry St. Ext., Wallingford, CT 06492. Representative: Thomas W. Murrett, 342 North Main St., W. Hartford, CT 06117. Transporting *machinery and steel*, between points in MD, DE, PA, NY, NJ, CT, RI, MA, NH, VT, and ME, on the one hand, and, on the other, points in the U.S. (including AK, but excluding HI). (Hearing site: Hartford, CT.)

MC 29643 (Sub-16F), filed April 10, 1980. Applicant: WALSH TRUCKING SERVICE, INC., 50 Burney Avenue, Massena, NY 13662. Representative: Morton E. Kiel, Suite 1832, 2 World Trade Center, New York, NY 10048. Transporting *paper*, and *materials, supplies, and equipment* used in the manufacture, sale, and distibution of paper (except commodities in bulk), between Glens Falls, NY, on the one hand, and, on the other, points in VT, RI, MA, CT, NH, NY, NJ, PA, DE, MD, and DC. (Hearing site: Albany, NY.)

MC 49392 (Sub-8F), filed March 20, 1980. Applicant: CAMPBELL'S MOVING COMPANY, INC., Summerton Rd., Trevose, PA 19047. Representative: Robert J. Gallagher, 1000 Connecticut Ave., NW., Suite 1200, Washington, DC 20036. Transporting *household goods* as defined by the Commission, between points in PA, NJ, DE, MD, NY, CT, MA, RI, OH, IN, IL, VA, and DC, on the one hand, and, on the other, points in the U.S. (except AK, HI, ID, MI, ND, OR, SD UT, WA, and WY). (Hearing site: Philadelphia, PA.)

MC 71652 (Sub-47F), filed April 29, 1980. Applicant: BYRNE TRUCKING, INC., 4669 Crater Lake Hwy., PO Box 280, Medford, OR 97501. Representative: David J. Stewart (same address as applicant). Transporting *general commodities* (except classes A and B explosives and household goods as defined by the Commission), between points in AZ, CA, CO, ID, MT, NM, OR, TX, UT, WA, and WY, restricted to traffic originating at or destined to the facilities of Owens/Corning Fiberglas. (Hearing site: Toledo, OH, or San Francisco, CA.)

MC 72243 (Sub-64F), filed March 20, 1980. Applicant: THE AETNA FREIGHT LINES, INC., P.O. Box 350, Warren, OH 44482. Representative: Edward G. Villalon, 1032 Pennsylvania Bldg., Pennsylvania Ave. & 13th St., NW., Washington, DC 20004. Transporting *aluminum articles*, between the facilities of (A) Taber Metals, Inc., and (B) Arkansas Billet, Inc., at or near Russellville, AR, on the one hand, and, on the other, points in IL, IN, KS, MI, MO, OK, OH, PA, TX and WI. (Hearing site: Little Rock, AR, or Washington, DC.)

MC 80443 (Sub-37F), filed April 1, 1980. Applicant: OVERNITE EXPRESS, INC., 2550 Long Lake Rd., Roseville, MN 55113. Representative: Samuel Rubenstein, P.O. Box 5, Minneapolis, MN 55440. Transporting (1) *mattresses, furniture, batting, padding, frames, springs, and molds*, from Lockland, OH, London, KY, Pontotoc, MS, and City of Industry, CA, to points in the U.S. (except AK and HI); and (2) *materials, equipment and supplies* used in the manufacture of the commodities in (1) above, in the reverse direction. (Hearing site: Cincinnati, OH.)

MC 80443 (Sub-38F), filed April 7, 1980. Applicant: OVERNITE EXPRESS, INC., 2550 Long Lake Road, Roseville, MN 55113. Representative: Samuel Rubenstein, Post Office Box 5, Minneapolis, MN 55440. Transporting *such commodities* as are dealt in or used by manufacturers or distributors of electric ranges and microwave ovens, between Minneapolis, MN, and Sioux Falls, SD, on the one hand, and, on the other, points in the U.S. (except AK and HI). (Hearing site: Minneapolis or St. Paul, MN.)

MC 87103 (Sub-54F), filed April 2, 1980. Applicant: MILLER TRANSFER AND RIGGING CO., a corporation, P.O. Box 322, Cuyahoga Falls, OH 44222. Representative: Edward P. Bocko (same address as applicant). Transporting (1) *pressure vessels, welded pipe, cryogenic vessels, galvanizing kettles, annealing boxes, annealing box covers, steel tanks, and fabricated metal articles*, (2) *parts, attachments, and accessories* for the commodities in (1) above, and (3) *materials, equipment, and supplies* used in the manufacture and distribution of the commodities in (1) and (2) above (except commodities in bulk) between the facilities of the National Annealing Box Company, at Washington, PA, on the one hand, and, on the other, points in the U.S. (except AK and HI), restricted to traffic originating at or destined to the named facilities. (Hearing site: Pittsburgh, PA, or Washington, DC.)

Note.—Dual operations may be involved.

MC 87103 (Sub-56F), filed April 22, 1980. Applicant: MILLER TRANSFER AND RIGGING CO., a corporation, P.O. Box 322, Cuyahoga Falls, OH 44222. Representative: Edward P. Bocko (same address as applicant). Transporting *such commodities* as are dealt in or used by manufacturers of metal rolling mill machinery (except commodities in bulk) between the facilities of Tippins Machinery Company, Inc., at or near Pittsburgh, PA, on the one hand, and, on the other, points in the U.S. (except AK and HI). (Hearing site: Pittsburgh, PA, or Washington, DC.)

Note.—Dual operations may be involved.

MC 103993 (Sub-1044F), filed April 22, 1980. Applicant: MORGAN DRIVE-AWAY, INC., 28651 U.S. 20 West, Elkhart, IN 46515. Representative: James B. Buda, (same address as applicant). Transporting *passenger automobiles and trucks*, in secondary movements, in truckaway service, from the facilities of Zimmer Motor Van, at or near Cordele, GA, to points in the U.S. (except AK and HI). (Hearing site: Atlanta, GA.)

MC 103993 (Sub-1045F), filed April 24, 1980. Applicant: MORGAN DRIVE-AWAY, INC., 28651 U.S. 20 West, Elkhart, IN 46515. Representative: James B. Buda, (same address as applicant). Transporting building materials, between Monticello, WI and the facilities of Seaborn Structurals, Inc., at or near Chicago, IL, on the one hand, and, on the other, points in the U.S. (except AK & HI), restricted to traffic originating at and destined to the above-named points. (Hearing site: Chicago, IL.)

MC 107002 (Sub-578F), filed April 4, 1980. Applicant: MILLER TRANSPORTERS, INC., P.O. Box 1123, Jackson, MS 39205. Representative: John J. Borth, P.O. Box 8573, Battlefield Station, Jackson, MS 39204. Transporting *alcohol*, in bulk, from Decatur, IL, to points in MS. (Hearing site: Jackson, MS.)

MC 107002 (Sub-579), filed April 4, 1980. Applicant: MILLER TRANSPORTERS, INC., P.O. Box 1123, Jackson, MS 39205. Representative: John J. Borth, P.O. Box 8573, Battlefield Station, Jackson, MS 39204. Transporting *asphalt*, in containers, from Lumberton, MS, to points in LA. (Hearing site: Jackson, MS.)

MC 107012 (Sub-515F), filed April 3, 1980. Applicant: NORTH AMERICAN VAN LINES, INC., 5001 U.S. Hwy 30 W., P.O. Box 988, Fort Wayne, IN 46801. Representative: David D. Bishop, (same address as applicant). Transporting *barbecue grills, and parts and accessories* for barbecue grills, from points in AR, CA, GA, IL, IN, MN, MO, NJ, NY, OH, TX, TN, and WI, to points in the U.S. (except AK and HI). (Hearing site: Chicago, IL, or Washington, DC.)

MC 107012 (Sub-516F), filed April 9, 1980. Applicant: NORTH AMERICAN VAN LINES, INC., 5001 U.S. Highway 30 West, P.O. Box 988, Fort Wayne, IN 46801. Representative: Stephen C. Clifford (same address as applicant). Transporting (1) *commercial washing machines, commercial drying machines, and commercial dry cleaning machines*, and (2) *parts and accessories* for the commodities in (1) above, from Fairfield, IA, to Chicago, IL, and points in AL, AZ, AR, CA, CO, GA, ID, KS, KY, LA, MN, MT, NE, NV, NM, NC, ND, OK, OR, SC, SD, TN, TX, UT, VA, WA and WY. (Hearing sites: Des Moines, IA, or Washington, DC.)

MC 107162 (Sub-67F), filed April 22, 1980. Applicant: NOBLE GRAHAM TRANSPORT, INC., Rural Route #1, Brimley, MI 49715. Representative: Michael S. Varda, 121 South Pinckney St., Madison, WI 53703. Transporting *lumber and lumber products*, from points in MN to those points in the U.S. in and east of ND, SD, NE, KS, OK, and TX. (Hearing site: St. Paul, MN, or Chicago, IL.)

Note.—Dual operations may be involved.

MC 107162 (Sub-69F), filed April 28, 1980. Applicant: NOBLE GRAHAM TRANSPORT, INC., Rural Route 1, Brimley, MI 49715. Representative: Michael S. Varda, 121 South Pinckney St., Madison, WI 53703. Transporting *lumber* (1) between points in the lower Peninsula of MI, and those in WI, south of WI.Hwy 64, on the one hand, and, on the other, those points in the U.S. in and east of ND, SD, NE, KS, OK, and TX, and (2) from those points in the U.S. in and east of ND, SD, NE, KS, OK, and TX to Chicago, IL (Hearing site: Chicago, IL or St. Paul, MN.)

Note.—Dual operations may be involved.

MC 107162 (Sub-70F), filed April 29, 1980. Applicant: NOBLE GRAHAM TRANSPORT, INC., Rural Route 1, Brimley, MI 49715. Representative: Michael S. Varda, 121 S. Pinckney St., Madison, WI 53703. Transporting *dry-mixed concrete*, and *tar emulsion sealer* (except in bulk), from Menomonee Falls, WI, to points in the Upper Peninsula of MI. (Hearing site: Milwaukee, WI, or Chicago, IL.)

Note.—Dual operations may be involved.

MC 109533 (Sub-129F), filed March 26, 1980. Applicant: OVERNITE TRANSPORTATION COMPANY, a corporation, 1000 Semmes Ave., Richmond, VA 23224. Representative:

Eugene T. Liipfert, Suite 1000, 1660 L St., NW., Washington, DC 20036. Over regular routes, transporting *general commodities* (except those of unusual value, classes A and B explosives, household goods as defined by the Commission, commodities in bulk, and those requiring special equipment), (1) between Memphis and Nashville, TN, over U.S. Hwy 70, serving no intermediate points; (2) between Nashville, TN, and Louisville, KY, over U.S. Hwy 31W, serving all intermediate points; and (3) between Bowling Green, KY and junction U.S. Hwy 31W and KY. Hwy 61: from Bowling Green over U.S. Hwy 68 to Glasgow, KY, then over U.S. Hwy 31E to junction KY Hwy 61, then over KY Hwy 61 to Junction U.S. Hwy 31W, and return over the same route, serving all intermediate points. (Hearing site: Memphis, TN, or Washington, DC.)

Note.—Applicant intends to tack the above authority with its existing regular and irregular-route authority.

MC 110012 (Sub-70F), filed April 7, 1980. Applicant: ROY WIDENER MOTOR LINES, INC., 707 North Liberty Hill Road, Morristown, TN 37814. Representative: John R. Sims, Jr., 915 Pennsylvania Bldg., 425—13th Street, NW., Washington, DC 20004. Transporting *new furniture and furniture parts*, from points in NJ, to points in TN, GA, SC, NC, KY, VA and AL. (Hearing site: Washington, DC.)

MC 110012 (Sub-71F), filed April 7, 1980. Applicant: ROY WIDENER MOTOR LINES, INC., 707 North Liberty Hill Road, Morristown, TN 37814. Representative: John R. Sims, Jr., 915 Pennsylvania Bldg., 425—13th Street, NW., Washington, DC 20004. Transporting (1) *new furniture and furniture parts*, from points in McMin County, TN, to those points in the U.S. in and east of MI, IL, MO, AR, and TX, and (2) *materials and supplies* used in the manufacture of new furniture (except commodities in bulk, in tank vehicles), in the reverse direction. (Hearing site: Washington, DC.)

MC 112962 (Sub-14F), filed March 7, 1979. Applicant: CRUPPER TRANSPORT CO., INC., 25 South Third, Kansas City, KS 66118. Representative: Tom B. Kretsinger, 20 East Franklin, Liberty, MO 64068. Transporting (1) *iron and steel forms*, (2) *conveyors*, and (3) *construction materials, equipment and supplies* between Kansas City, KS, and points in CO, IA, IL, MO, NE, OK, and WY, restricted to traffic originating at or near destined to the facilities of Mid-West Conveyor Co., Inc. (Hearing site: Kansas City, MO).

MC 114132 (Sub-9E), filed April 2, 1980. Applicant: CHURN'S TRUCK LINES, INC., P.O. Box 188, Eastville, VA 23347. Representative: William J. Augello, 120 Main, P.O. Box Z, Huntington, NY 11743. Transporting *foodstuffs*, from Cheriton, VA and Queen Anne, MD, to points in CT, DE, FL, GA, IL, IN, KY, MA, MD, MI, NC, NJ, NY, OH, PA, RI, SC, TN, VA, WV, and DC. (Hearing site: Washington, DC.)

MC 114273 (Sub-717F), filed April 4, 1980. Applicant: CRST, INC., P.O. Box 68, Cedar Rapids, IA 52406. Representative: Kenneth L. Core (same address as applicant). Transporting *feed, feed ingredients, and alcohol kits grain*, (except commodities in bulk, in tank vehicles), from Cedar Rapids, IA, to points in KS, KY, MN, MO, NC, TN, VA, WV, and WI. (Hearing site: Chicago, IL, or Washington, DC.)

MC 114273 (Sub-718F), filed April 4, 1980. Applicant: CRST, INC., P.O. Box 68, Cedar Rapids, IA 52406. Representative: Kenneth L. Core (same address as applicant). Transporting *such commodities* as are dealt in by paint and home decorating stores and supply houses, (except commodities in bulk, in tank vehicles), from Chicago Heights, IL, to points in WV. (Hearing site: Chicago, IL, or Washington, DC.)

MC 114273 (Sub-720F), filed April 4, 1980. Applicant: CRST, INC., P.O. Box 68, Cedar Rapids, IA 52406. Representative: Kenneth L. Core (same address as applicant). Transporting *paints, preservatives, and fillers*, from Avon, CT, to those points in the U.S. in and east of ND, SD, NE, CO, and NM. (Hearing site: Chicago, IL, or Washington, DC.)

MC 114273 (Sub-723F), filed April 4, 1980. Applicant: CRST, INC., P.O. Box 68, Cedar Rapids, IA 52406. Representative: Kenneth L. Core (same address as applicant). Transporting (1) *iron and steel articles, and building materials*, and (2) *materials, equipment, and supplies* used in the manufacture and distribution of iron and steel articles, and building materials (except commodities in bulk), between points in the U.S. (except AK and HI), restricted to traffic originating at or destined to the facilities used by Newton Steel Metal, Inc. (Hearing site: Chicago, IL, or Washington, DC.)

MC 114273 (Sub-725F), filed April 4, 1980. Applicant: CRST, INC., P.O. Box 68, Cedar Rapids, IA 52406. Representative: Kenneth L. Core (same address as applicant). Transporting *scrap metal*, from Newton, IA, to points in IL, IN, KS, MI, MN, MO, NE, OH, PA, and WI. (Hearing site: Chicago, IL, or Washington, DC.)

MC 114312 (Sub-33F), filed March 18, 1980. Applicant: ABBOTT TRUCKING, INC., Route 3, Box 74, Delta, OH 43515. Representative: A. Charles Tell, 100 E. Broad St., Columbus, OH 43215. Transporting (1) *fertilizer* (except in bulk), from the facilities of The Andersons, at or near Maumee, OH, to points in MA, TN and VA; and (2) *insulating materials*, in bags, from the facilities of Electra Manufacturing Corporation, at Wauseon, OH, to points in IL, IN, KY, MI, PA, WV and WI. (Hearing site: Columbus, OH.)

MC 114362 (Sub-20F), filed April 18, 1980. Applicant: ROBERT J. ECKLUND d.b.a. ECKLUND TRUCKING, P.O. Box 151, Kiester, MN 56051. Representative: John B. Van de North, Jr., 2200 First National Bank Bldg., St. Paul, MN 55101. Transporting *feed ingredients*, from points in IA to points in MN and WI. (Hearing sites: St. Paul or Mankato, MN.)

MC 116063 (Sub-165F), filed April 3, 1980. Applicant: WESTERN-COMMERCIAL TRANSPORT, INC., P.O. Box 270, Fort Worth, TX 76101. Representative: W. H. Cole (same address as applicant). Transporting *tallow*, in bulk, in tank vehicles, from Oakland, IA, to points in IL, MN, and MO. (Hearing site: Fort Worth or Dallas, TX.)

MC 116763 (Sub-655F), filed April 22, 1980. Applicant: CARL SUBLER TRUCKING, INC., a FL corporation, North West St., Versailles, OH 45380. Representative: Gary J. Jira (same address as applicant). Transporting *general commodities* (except commodities in bulk, classes A and B explosives, used household furniture, commodities requiring special equipment, and automobiles, trucks, and buses as described in the report in *Descriptions in Motor Carrier Certificates*, 61 M.C.C. 209 and 766), between points in the U.S. (except AK and HI), restricted to traffic originating at or destined to the facilities used by Uarco, Inc. (Hearing site: Dallas, TX.)

MC 117503 (Sub-14F), filed March 19, 1979. Applicant: HATFIELD TRUCKING SERVICE, INC., 1625 North C Street, Sacramento, CA 95814. Representative: Eldon M. Johnson, Suite 2808, 650 California Street, San Francisco, CA 94108. Transporting *general commodities* (except those of unusual value, class A explosives, commodities in bulk, and household goods as defined by the Commission), between Los Angeles, Oakland, Sacramento and Stockton, CA, and Reno, NV, on the one hand, and, on the other, points in Butte, Colusa, El Dorado, Glenn, Nevada, and Placer Counties, CA, Carson City, NV,

and points in Douglas, Dyon, Storey, and Washoe Counties, NV, restricted to traffic moving on bills of lading of freight forwarders as defined in 49 U.S.C. § 10102(8). Condition: To the extent any certificate issued in this proceeding authorizes the transportation of class B explosives, it shall be limited in term to a period expiring 5 years from its date of issue. (Hearing site: San Francisco or Sacramento, CA.)

MC 118263 (Sub-105F), filed April 14, 1980. Applicant: COLDWAY CARRIERS, INC., P.O. Box 2038, Clarksville, IN 47130. Representative: William L. Willis, 708 McClure Building, Frankfort, KY 40601. Transporting: *foodstuffs* (except in bulk), in vehicles equipped with mechanical refrigeration, from the facilities of New Orleans Cold Storage and Warehouse Company Ltd., at or near New Orleans and Metairie, LA, on the one hand, and, on the other, points in IA, IL, IN, KY, MI, MO, TN, VA, and WI. (Hearing site: New Orleans, LA, or Louisville, KY.)

MC 119522 (Sub-48F), filed April 16, 1980. Applicant: McLAIN TRUCKING, INC., 2425 Walton Street, P.O. Box 2159, Anderson, IN 46011. Representative: John B. Leatherman, Jr. (same address as applicant). Transporting *automotive supplies* (except commodities, in bulk), from the facilities used by Union Carbide Corporation, at or near Chicago, IL, to points in IN, KY, MI, MO, OH, and TN, and (b) from the facilities used by Union Carbide Corporation, at or near Holland and Owosso, MI, to points in IL, IN, KY, MO, OH, and TN. (Hearing site: Washington, DC.)

MC 125433 (Sub-406F), filed April 4, 1980. Applicant: F-B TRUCK LINE COMPANY, 1945 Redwood Rd., Salt Lake City, UT 84184. Representative: John B. Anderson (same address as applicant). Transporting *alcoholic beverages*, from points in Santa Clara, and San Mateo Counties, CA, to points in the U.S. (except AK and HI), restricted to traffic originating at the facilities of Paul Masson, Inc., in Santa Clara and San Mateo Counties, CA. (Hearing site: San Francisco, CA.)

MC 125433 (Sub-407F), filed April 4, 1980. Applicant: F-B TRUCK LINE COMPANY, 1945 Redwood Rd., Salt Lake City, UT 84104. Representative: John B. Anderson (same address as applicant). Transporting *general commodities* (except those of unusual value, classes A and B explosives, household goods as defined by the Commission, commodities in bulk, and those requiring special equipment), between points in the U.S. (except AK an HI), restricted to traffic originating at or destined to the facilities of Ralston Purina Company. (Hearing site: Columbus, OH, or Chicago, IL.)

MC 125813 (Sub-23F), filed April 30, 1980. Applicant: CRESSLER TRUCKING, INC., 691 Orrstown Road, P.O. Box 312, Shippensburg, PA 17257. Representative: Edward G. Villalon, 1032 Pennsylvania Building, Pennsylvania Ave. and 13th St. NW., Washington, DC 20004. Transporting *shafting pulleys and sheaves, shaft collars, shaft couplings, and clutch couplings*, from the facilities of T. B. Wood's Sons Company, at or near, (a) Chambersburg, PA, and (b) Trenton, TN, to Atlanta, GA, Chicago, IL, Dallas, TX, San Leandro, CA, and Tulsa, OK. (Hearing site: Shippensburg, PA, or Washington, DC.)

MC 126822 (Sub-87F), filed April 14, 1980. Applicant: WESTPORT TRUCKING COMPANY, a corporation, 15580 South 169 Hwy., Olathe, KS 66061. Representative: John T. Pruitt (same address as applicant). Transporting *containers and container closures, and materials, equipment, and supplies* used in the manufacture and distribution of containers, between points in the U.S. (except AK and HI), restricted to traffic originating at or destined to the facilities of Crown Cork & Seal Company, Inc. (Hearing site: Philadelphia, Pa.)

MC 134783 (Sub-66F), filed April 1, 1980. Applicant: DIRECT SERVICE, INC., 940 East 66th Street, P.O. Box 2491, Lubbock, TX 79408. Representative: Charles M. Williams, 350 Capitol Life Center, 1600 Sherman Street, Denver, CO 80203. Transporting (1) *canned and preserved apple products and canned and preserved apple by-products*, from the facilities of National Fruit Product Company, Inc., at (a) Winchester and Timberville, VA, (b) Martinsburg, WV, and (c) Lincolnton, NC, to points in AZ, CA, CO, ID, MT, NM, NV, OR, UT, WA, and WY, and (2) *foodstuffs* from the facilities of Skyland Foods Corporation, at or near Delta, CO, to the origin facilities in (1) above. (Hearing site: Winchester, VA, or Lubbock, TX.)

Note.—Dual operations may be involved.

MC 135803 (Sub-15F), filed April 11, 1980. Applicant: WALLACE TRANSPORT, a corporation, 9290 E. Hwy. 140, P.O. Box 67, Planada, CA 95365. Representative: Donald M. Fennel (same address as applicant). Transporting *such commodities* as are dealt in by grocery and food business houses, and *materials and supplies* used in the manufacture and sale of such commodities between the facilities of Ralston Purina Co., at or near Sparks, NV, and points in CA. (Hearing site: San Francisco, CA.)

MC 135803 (Sub-12F), filed March 25, 1980. Applicant: WALLACE TRANSPORT, a Corporation, 9290 E. Hwy. 140 (P.O. Box 67), Planada, CA 95365. Representative: R. Y. Schureman, 1545 Wilshire Blvd., Los Angeles, CA 90017. Transporting *confectionery*, (1) from the facilities of Hershey Chocolate Company, at or near Oakdale, CA, to points in NV, and (2) from the facilities of E. J. Brach & Son, at Reno, NV, to points in CA. (Hearing site: Los Angeles, CA.)

MC 138283 (Sub-12F), filed April 7, 1980. Applicant: DANA TRUCING COPORATION, P.O. Box 6, Round Lake MN 56167. Representative: Michael J. Ogborn, P.O. Box 82028, Lincoln, NE 68501. *Contract carrier*, transporting *foodstuffs* (except commodities in bulk, dairy products, frozen food products, meat and meat products), from Bryan and Urbana, OH, Bloomington, IL, and Buffalo, NY, to Minneapolis, MN, under continuing contract(s) with Nordic Warehouse, Division of Excel Marketing, Inc., of Minneapolis, MN. (Hearing site: Minneapolis, MN.)

MC 138882 (Sub-362F), filed April 24, 1980. Applicant: WILEY SANDERS TRUCK LINES, INC., P.O. Drawer 707, Troy, AL 36081. Representative: John J. Dykema (same address as applicant). Transporting *foodstuffs* (except in bulk in tank vehicles) between the facilities of Seabrook Blanching Corp., at Edenton, NC, on the one hand, and, on the other, points in the U.S. (except AK and HI). (Hearing site: Albany, GA, or Winston Salem, NC.)

MC 139312 (Sub-11F), filed February 27, 1980. Applicant: NORTHEAST TRUCK BROKERS OF TEXAS, INC., 2705 N. Cage, P.O. Box 826, Pharr, TX 78577. Representative: Thomas R. Kingsley, 10614 Amherst Ave., Silver Spring, MD 20902. Transporting *frozen foods*, (1) from points in CA to points in the U.S. (except AK, CA, and HI) and (2) from points in TX to points in the U.S. (except AK, HI, and TX). (Hearing site: Washington, DC.)

MC 139482 (Sub-174F), filed April 18, 1980. Applicant: NEW ULM FREIGHT LINES, INC., P.O. Box 877, New Ulm, MN 56073. Representative: James E. Ballenthin, 630 Osborn Building, St. Paul, MN 55102. Transporting *meats, meat products, meat by-products*, and *articles distributed by meat-packing houses*, as described in Sections A and C of Appendix I to the report in *Descriptions in Motor Carriers Certificates*, 61 M.C.C. 209 and 766, (except hides and commodities in bulk), from the facilities used by Armour and Company, at or near (a) Huron, SD, (b) Worthington, MN, and (c) Madison, NE, to points in

the U.S. (except AK and HI). (Hearing site: Phoenix, AZ, or Omaha, NE.)

MC 141033 (Sub-65F), filed April 4, 1980. Applicant: CONTINENTAL CONTRACT CARRIER CORP., a DE corporation, P.O. Box 1257, 15045 East Salt Lake Ave., City of Industry, CA 91749. Representative: James I. Mendenhall (same address as applicant). Transporting (1) *such commodities* as are dealt in by manufacturers of (a) paint coatings, (b) plastic articles, and (c) cement compounds, (except commodities in bulk), from the facilities of Ameron Corporation, in (i) Los Angeles and Orange Counties, CA, (ii) Sedgwick County, KS, (iii) Erie County, NY, (iv) Tulsa County, OK, (v) Washington County, PA, and (vi) Spartanburg County, SC, to points in the U.S. (except AK and HI); and (d) *materials, equipment, and supplies* used in the manufacture and distribution of the commodities in (1) above, (except commodities in bulk), in the reverse direction. (Hearing site: Los Angeles, CA, or Washington, DC.)

MC 141932 (Sub-33F), filed April 29, 1980. Applicant: POLAR TRANSPORT, INC., 176 King St., Hanover, MA 02339. Representative: Alton C. Gardner (same address as applicant). Transporting *foodstuffs*, (1) from the facilities of McCain Foods, Inc., at Easton, Portland, and Washburn, ME, to points in IL, IN, MI, MN, MO and OH, and (2) from the facilities of Potato Service, Inc., at Bangor and Portland, ME and in Aroostook County, ME, to points in IL, IN, IA, MI, MN, MO, OH, and WI. (Hearing site: Boston, MA.)

Note.—Dual operations may be involved.

MC 142153 (Sub-4F), filed February 4, 1980. Applicant: DANNER'S INCORPORATED, 1201 Kellogg, Houston, TX 77012. Representative: Damon R. Capps, Suite 1230, Capital National Bank Bldg., Houston, TX 77002. Transporting *such commodities* as are used in the manufacture, operation, and maintenance of marine vessels and offshore rigs, and *marine personnel luggage and personal affects* (except commodities in bulk), between points in AL, CT, DE, FL, GA, LA, MA, MD, ME, MS, NC, NJ, NY, RI, SC, TX, and VA. (Hearing site: Houston, TX.)

MC 142672 (Sub-128F), filed April 3, 1980. Applicant: DAVID BENEUX PRODUCE & TRUCKING, INC., P.O. Drawer F, Mulberry, AR 72947. Representative: Don Garrison, P.O. Box 1065, Fayetteville, AR 72701. Transporting *such commodities* as are dealt in by grocery and food business houses (except frozen and in bulk), from French Lick, IN, and West Chester and Kennett Square, PA, to the facilities of the Clorox Company, at or near Houston, TX. (Hearing site: Oakland, CA, or Ft. Smith, AR.)

Note.—Dual operations may be involved.

MC 143002 (Sub-18F), filed April 22, 1980. Applicant: C.D.B., INCORPORATED, 155 Spaulding, S.E., Grand Rapids, MI 49506. Representative: Karl L. Gotting, 1200 Bank of Lansing Bldg., Lansing, MI 48933. *Contract carrier*, transporting *drugs and toilet articles, and materials and supplies* used in the manufacture and distribution of drugs and toilet articles, (1) between Allegan, MI, on the one hand, and, on the other, points in the U.S. (except AK and HI), and (2) from Tempe, AZ to Los Angeles and San Francisco, CA, under continuing contract(s) in (1) and (2) with L. Perrigo Company, of Allegan, MI. (Hearing site: Lansing or Grand Rapids, MI.)

Note.—Dual operations may be involved.

MC 143503 (Sub-31F), filed April 26, 1980. Applicant: MERCHANTS HOME DELIVERY SERVICE, INC., P.O. Box 5067, Oxnard, CA 93031. Representative: T. M. Brown, P.O. Box 1540, Edmond, OK 73034. Transporting *new furniture, furnishings, and appliances*, from Haverhill, and Lawrence, MA, to points in RI, Cheshire, Hillsboro, Rockingham, Strafford, Belknap, Merrimack, and Sullivan Counties, NH, and York and Cumberland Counties, ME. (Hearing site: Boston, MA.)

MC 143503 (Sub-32F), filed February 26, 1980. Applicant: MERCHANTS HOME DELIVERY SERVICE, INC., P.O. Box 5067, Oxnard, CA 93031. Representative: T. M. Brown, P.O. Box 1540, Edmond, OK 73034. Transporting *new furniture, furnishings, and appliances*, from Fredericksburg, VA, to points in MD, DE, Franklin, Adams, York, Lancaster, and Chester Counties, PA, Greenbrier, Pendleton, Hampshire, Berkeley, Pocahontas, Hardy, Morgan, and Jefferson Counties, WV, and DC. (Hearing site: Washington, D.C.)

MC 144122 (Sub-74F), filed April 8, 1980. Applicant: CARRETTA TRUCKING, INC., S. 160 Route 17 North, Paramus, NJ 07652. Representative: Joseph Carretta (same address as applicant). Transporting (1) *cleaning compounds, washing compounds, polishing compounds, textile softeners, lubricants, hypochlorite solution, deodorants, disinfectants, and paints* (except commodities in bulk) and (2) *materials, equipment and supplies* used in the distribution and manufacture of the commodities in (1) above (except commodities in bulk) between points in the U.S., restricted to traffic originating at or destined to the facilities of Economics Laboratory, Inc. (Hearing sites: St. Paul, MN, or Washington, DC.)

Note.—Dual operations may be involved.

MC 144363 (Sub-10F), filed April 11, 1980. Applicant: HIRSCHBACH MOTOR LINES, INC., 5000 South Lewis Boulevard, P.O. Box 417, Sioux City, IA 51102. Representative: George L. Hirschbach (same address as applicant). *Contract carrier*, transporting *such commodities* as are dealt in or used by retail stores (except foodstuffs and commodities in bulk), from Tacoma and Seattle, WA, to the facilities of Modern Merchandising, Inc., in AZ, CO, FL, MN, ND, SD, UT, and WY, under continuing contract(s) with Modern Merchandising, Inc., of Minnetonka, MN. (Hearing sites: Minneapolis, MN, or Omaha, NE.)

Note.—Dual operations may be involved.

MC 144622 (Sub-160F), filed April 1, 1980. Applicant: GLENN BROTHERS TRUCKING, INC., P.O. Box 9343, Little Rock, AR 72219. Representative: Phillip G. Glenn (same address as applicant). Transporting (1) *insulators, wiring, pottery and pottery products*, (2) *parts* for the commodities in (1) above, and (3) *materials and supplies* used in the manufacure and distribution of the commodities in (1) and (2) above, between Sandersville, GA, on the one hand, and, on the other, points in the U.S. (except AK AND HI). (Hearing site: Little Rock, AR.)

Note.—Dual operations may be involved.

MC 144622 (Sub-161F), filed April 4, 1980. Applicant: GLENN BROTHERS TRUCKING, INC., P.O. Box 9343, Little Rock, AR 72219. Representative: Phillip G. Glenn (same address as applicant). Transporting (1) *ladders, scaffolding, work platforms and lift platforms*, (2) *parts* for the commodities in (1) above, and (3) *materials and supplies* used in the manufacture and distribution of the commodities in (1) and (2) above, between Wooster, OH, on the one hand, and, on the other, points in the U.S. (except AK and HI). (Hearing site: Little Rock, AR.)

Note.—Dual operations may be involved.

MC 144763 (Sub-1F), filed April 3, 1980. Applicant: SMITH BUS SERVICE, INC., P.O. Box 487, Taylorville, IL 62568. Representative: Bruce E. Mitchell, Suite 520, Lenox Towers South, 3390 Peachtree, Road, N.E., Atlanta, GA 30326. Transporting *passengers and their baggage*, in the same vehicle with passengers, in special and charter operations, beginning and ending at points in Montgomery County, IL, and extending to points in the U.S. (including AK, but excluding HI). (Hearing site: Springfield, IL, or St. Louis, MO.)

MC 145102 (Sub-54F), filed April 4, 1980. Applicant: FREYMILLER TRUCKING, INC., P.O. Box 188, Shullsburg, WI 53586. Representative: Wayne W. Wilson, 150 East Gilman Street, Madison, WI 53703. Transporting *prepared foodstuffs* from Denison, TX, to points in AZ, AR, CA, CO, ID, KS, MO, MT, NE, NV, NM, OK, OR, SD, UT, WA, and WY. (Hearing site: Madison, WI or Minneapolis, MN.)

Note.—Dual operations may be involved.

MC 145152 (Sub-186F), filed April 3, 1980. Applicant: BIG THREE TRANSPORTATION, INC., P.O. Box 706, Springdale, AR 72764. Representative: Don Garrison, Esq., P.O. Box 1065, Faetteville, AR 72701. Transporting *candy and confectionery*, from the facilities of Zachary Confections, Inc., at or near Chicago, IL, to Orlando, FL, Shelbyville, KY, and, Hattiesburg, MS. (Hearing site: Chicago, IL, or Fayetteville, AR.)

MC 145593 (Sub-8F), filed March 17, 1980. Applicant: HAROLD SHULL TRUCKING, INCORPORATED, P.O. Box 1533, Hickory, NC 28601. Representative: Harold D. Shull, Curley Fish Camp Rd., Hildebran, NC 28637. Transporting (1) *plastic bottles*, (a) from Port Clinton, Columbus, and Elyria, OH, to Elizabethton, TN, and (b) from Port Clinton, OH, to points in NC; and (2) *petroleum products*, from Bradford, PA, to Charlotte, NC. (Hearing site: Charlotte, NC.)

MC 145623 (Sub-8F), filed April 1, 1980. Applicant: O. K. MESSENGER SERVICE, INC., 9107 Telegraph Road, Taylor, MI 48180. Representative: Edwin M. Snyder, 22375 Haggerty Road, P.O. Box 400, Northville, MI 48167. *Contract carrier*, transporting *iron and steel articles*, between Detroit, MI, on the one hand, and, on the other, points in MO, under a continuing contract(s) with Bethlehem Steel Corporation, of Chicago, IL. (Hearing site: Detroit, MI, or Chicago, IL.)

MC 146202 (Sub-1F), filed December 26, 1979. Applicant: CONTRACTUAL CARRIERS, INC., Harmony Industrial Park, Newark, DE 19711. Representative: Samuel W. Earnshaw, 833 Washington Bldg., Washington, DC 20005. Transporting *general commodities* (except those of unusual value, classes A and B explosives, household goods as defined by the Commission, liquid commodities in bulk, and commodities requiring special equipment), between the facilities of D & S Warehousing, Inc., at Newark, DE, on the one hand, and, on the other, points in CT, DE, MD, NJ, NY, PA, VA, and WV (Hearing site: Washington, DC.)

MC 146423 (Sub-10F), filed March 20, 1980. Applicant: STEPHEN HROBUCHAK, d.b.a. TRANS-CONTINENTAL REFRIGERATED LINES, P.O. Box 1456, Scranton, PA 18503. Representative: George A. Olsen, P.O. Box 357, Gladstone, NJ 07934. Transporting (1) *floor covering*, from Whitehall and Fullerton, PA, to points in CA, AZ, NM, CO, WA, and OR, and (2) *floor tile*, from Vails Gate, NY, to points in CA, AZ, NM, CO, WA, and OR. (Hearing site: New York, NY, or Washington, DC.)

Note.—Dual operations may be involved.

MC 146993 (Sub-2F), filed March 19, 1980. Applicant: RAYMOND L. VAUGHAN, d.b.a. VAUGHAN CARTAGE COMPANY, P.O. Box 1798, LaGrange, GA 30241. Representative: C. E. Walker, P.O. Box 7381, Columbus, GA 31908. Transporting *general commodities* (except commodities in bulk) between Montgomery, and Lanett, AL, and Atlanta, GA, on the one hand, and, on the other, points in Heard, Troup, and Meriwether Counties, GA, and Randolph, Chambers, Lee, and Taalapoosa Counties, AL, restricted to traffic having a prior or subsequent movement by rail. Condition: To the extent any certificate issued in this proceeding authorizes the transportation of classes A and B explosives it shall be limited to a period expiring 5 years from its date of issue. (Hearing site: Atlanta, GA.)

MC 147092 (Sub-3F), filed April 3, 1980. Applicant: EMIL E. CHAMP, an individual, Route 3, Box 103, Junction City, KS 66441. Representative: Arthur J. Cerra, 2100 TenMain Center, P.O. Box 19251, Kansas City, MO 64141. Transporting *bag making machines*, from Junction City, KS, to points in the U.S. (except AK and HI). (Hearing site: Kansas City, MO.)

MC 147632 (Sub-5F), filed April 3, 1980. Applicant: M & M FARM LINES, INC., Route 1, Bertrand, MO 63823. Representative: Thomas F. Kilroy, Suite 406 Executive Bldg., 6901 Old Keene Mill Rd., Springfield, VA 22150. Transporting *fluorescent lighting fixtures, and parts and accessories* for fluorescent lighting fixtures, (1) from the facilities used by Keystone Lighting Corporation, at Kingston, NY, and in Philadelphia and Bucks Counties, PA, to points in FL, TX, and MS, and (2) from points in MS to the facilities used by Keystone lighting Corporation, at Kingston, NY, and in Philadelphia and Bucks Counties, PA. (Hearing site: Philadelphia, PA, and Washington, DC.)

MC 148362 (Sub-3F), filed April 22, 1980. Applicant: HAR-BET, INC., a TN corporation, Atlanta, GA 30236. Representative: Clyde W. Carver, P.O. Box 720434, Atlanta, GA 30328. *Contract carrier*, transporting (1) *such commodities* as are used by hospitals, nursing homes, health care centers, and laboratories, (a) from Atlanta and Milledgeville, GA, and Irvine, CA, to those points in the U.S. on and east of U.S. Hwy 85, and (b) from Atlanta and Milledgeville, GA, to points in Los Angeles and Orange Counties, CA, and (2) *materials, equipment, and supplies* used in the manufacture and distribution of the commodities in (1) above, in the reverse directions in (1) (a) and (b) above, under continuing contract(s) in (1) and (2) above with McGaw Laboratories, of Atlanta, GA, a division of American Hospital Supply Corporation. (Hearing site: Atlanta, GA, or Washington, DC.)

MC 148422 (Sub-2F), filed April 2, 1980. Applicant: TWOWAY SUPPLY, INC., Box 347, Pond Creek, OK 73766. Representative: John T. Farmer (same address as applicant). Transporting *iron and steel articles*, from Houston, TX to points in OK and KS. (Hearing site: Oklahoma City or Tulsa, OK.)

MC 148753 (Sub-2F), filed April 14, 1980. Applicant: YANKS, INC., 229 S. Cedar Street, Lansing, MI 48912. Representative: Karl L. Gotting, 1200 Bank of Lansing Bldg., Lansing, MI 48933. Transporting *materials and equipment* used in the manufacture of motor vehicles, from the facilities of General Motors Corporation, at Lansing, MI, to Detroit Willow Run Airport and Detroit Metropolitan Airport, MI, restricted to traffic having a subsequent movement by air.

MC 150422F, filed April 3, 1980. Applicant: OKLAHOMA-KANSAS GRAIN CORP., P.O. Box N, 5150 West Channel Rd, Catoosa, OK 74015. Representative: Clyde N. Christey, Ks Credit Union Bldg., 1010 Tyler, Suite 110L, Topeka, KS 66612. Transporting *salt and salt products*, from Port of Catoosa, OK, to points in KS and MO. Condition: Carrier must conduct its for-hire motor carrier activities and its other business activities independently and must maintain separate records for each. (Hearing site: Kansas City, MO.)

MC 150553F, filed April 7, 1980. Applicant: TRI-STATE TRUCKING OF FULTON, INC., P.O. Box 39, Fulton, MS 38843. Representative: Ronald L. Stichweh, 727 Frank Nelson Building, Birmingham, AL 35203. Transporting *forest products* and *lumber mill products*, (1) from Fulton, MS, to points in AL, AR, FL, GA, IL, IN, IA, KS, KY, LA, MI, MN, MO, NE, NC, ND, OH, OK, SC, SD, TN, TX, and WI, and (2) from points in AL, AR, FL, GA, LA, and TX, to

Fulton, MS. (Hearing site: Columbus or Jackson, MS.)

MC 150562F, filed April 10, 1980. Applicant: FANCHER ENTERPRISES, INC., 1824 W. 52nd Place, Merrillville, IN 46410. Representative: Donald W. Smith, P.O. Box 40248, Indianapolis, IN 46240. Transporting (1) *refractory lining material,* from Crown Point, IN, to St. Louis, MO, and points in OH and PA, (2) *clay,* from High Hill, MO, to Crown Point, IN, and (3) *bricks,* from points in OH and PA, to Crown Point, IN. (Hearing sites: Chicago, IL or Indianapolis, IN.)

MC 150572F, filed March 24, 1980. Applicant: WORLD WIDE JOYE TOURS, INC., 4222 W. Alamos St., Suite 102, Fresno, CA 93704. Representative: William R. Daly, 4340 Vandever Ave., Suite S, P.O. Box 20521, San Diego, CA 92120. Transporting *passengers and their baggage,* in the same vehicle with passengers, in special or charter operations, in sightseeing and pleasure tours, beginning and ending at points in Fresno County, CA, and extending to points in the U.S. (including AK, but excluding HI). (Hearing site: Fresno or San Francisco, CA.)

MC 150653, filed April 14, 1980. Applicant: DOYLE'D CARRIERS, INC., 4425 Highway 31 East, Clarksville, IN 47130. Representative: Donald W. Smith, P.O. Box 40248, Indianapolis, IN 46240. Transporting *ladders, and equipment, materials and supplies* used in the manufacture and distribution of ladders, from the facilities of Rich Ladder Company, at Carrollton, KY, to points in AL, AR, AZ, CA, CO, CT, FL, GA, IA, ID, IL, IN, KS, KY, LA, MI, MN, MO, MS, MT, ND, NE, NM, NV, NY, OH, OK, OR, PA, SD, TN, TX, UT, WA, WI, and WY. (Hearing sites: Louisville, KY, or Indianapolis, IN.)

Volume No. 217

Decided: June 19, 1980.

By the Commission, Review Board Number 2, Members Eaton, Liberman, and Chandler.

MC 2202 (Sub-637F), filed May 19, 1980. Applicant: ROADWAY EXPRESS, INC., P.O. Box 471, 1077 Gorge Blvd., Akron, OH 44309. Representative: William O. Turney, Suite 1010, 7101 Wisconsin Ave., Washington, DC 20014. Over regular routes, transporting *general commodities* (except those of unusual value, classes A and B explosives, household goods as defined by the Commission, commodities in bulk, and those requiring special equipment), between junction U.S. Hwys 81 and 190 and junction U.S. Hwys 190 and 77, serving all intermediate points, over U.S. Hwy 190. (Hearing site: Washington, DC.)

MC 2202 (Sub-638F), filed May 27, 1980. Applicant: ROADWAY EXPRESS, INC., P.O. Box 471, 1077 Gorge Blvd., Akron, OH 44309. Representative: William O. Turney, Suite 1010, 7101 Wisconsin Ave., Washington, DC 20014. Over regular routes, transporting *general commodities* (except those of unusual value, classes A and B explosives, household goods as defined by the Commission, commodities in bulk, and those requiring special equipment), between Indianapolis, IN and Bedford, IN, serving all intermediate points, from Indianapolis over IN Hwy 37 to Jct IN Hwy 54, then over IN Hwy 54 to Bedford, and return over the same route. (Hearing site: Washington, DC.)

MC 32882 (Sub-149F), filed May 13, 1980. Applicant: MITCHELL BROS., TRUCK LINES, a corporation, 3841 North Columbia Blvd., Portland, OR 97217. Representative: David J. Lister, P.O. Box 17039, Portland, OR 97217. Transporting *such commodities* as are dealt in or used by dealers and manufacturers of agricultural equipment, industrial equipment, and lawn care and leisure products (except commodities in bulk, automobiles, trucks, and buses), between points in WA, OR, ID, MT, CA, NV, AZ, UT, WY, NM, and CO, restricted, except on traffic moving in foreign commerce, to traffic having a prior or subsequent movement by rail or water. (Hearing site: Salt Lake City, UT.)

MC 39073 (Sub-10F), filed May 1, 1980. Applicant: BUDRECK TRUCK LINES, INC., 9330 South Constance Ave., Chicago, IL 60617. Representative: Richard A. Kerwin, 180 North LaSalle St. Chicago, IL 60601. Transporting *meats, meat products and meat by-products, dairy products, and articles distributed by meat packinghouses,* as described in sections A, B, and C of Appendix I to the report in *Descriptions in Motor Carrier Certificates,* 61 M.C.C. 209 and 766 (except hides and commodities in bulk), and *foodstuffs,* in mechanically refrigerated vehicles, from the facilities of (a) Dawson Baker Packing Co., at or near Louisville, KY, and (b) Ropak, Inc., at or near Rockville, IN, to points in IL, WI, MO, IA, MI, and OH. (Hearing site: Chicago, IL.)

MC 41432 (Sub-167F), filed May 12, 1980. Applicant: EAST TEXAS MOTOR FREIGHT LINES, INC., 2355 Stemmons Freeway, P.O. Box 10125 Dallas, TX 75207. Representative: Wayland Little (same address as applicant). Over regular routes, transporting *general commodities* (except those of unusual value, classes A and B explosives, household goods as defined by the Commission, commodities in bulk, and those requiring special equipment), serving the facilities of Royal Seating Corp., at or near Cameron, TX, as an off-route point in connection with carrier's otherwise authorized regular-route operations. (Hearing site: Dallas or Austin, TX.)

MC 43963 (Sub-28F,) filed May 21, 1980. Applicant: CHIEF TRUCK LINES, INC., 1479 Ripley Street, Lake Station, IN 46405. Representative: James C. Hardman, 33 N. LaSalle St., Chicago, IL 60602. Transporting *metal articles* (except commodities which because of size or weight require the use of special equipment), between Minneapolis, MN and Waukesha, WI, on the one hand, and, on the other, those points in the U.S. in and east of MN, IA, MO, AR and LA. (Hearing site: Chicago, IL.)

MC 47583 (Sub-125F), filed May 12, 1980. Applicant: TOLLIE FREIGHTWAYS, INC., 1020 Sunshine Rd., Kansas City, KS 66115. Representative: D. S. Hults, P.O. Box 225, Lawrence, KS 66044. Transporting *non-alcoholic beverages* (except in bulk), from St. Louis, MO, to points in IA, KS, and NE, restricted to traffic originating at the named origin and destined to the named destinations. (Hearing site: Kansas City, MO.)

MC 47583 (Sub-127F), filed May 21, 1980. Applicant: TOLLIE FREIGHTWAYS, INC., 1020 Sunshine Rd., Kansas City, KS 66115. Representative: D. S. Hults, P.O. Box 225, Lawrence, KS 66044. Transporting (1) *air coolers, air conditioners, humidifiers, heating pumps, and air cleaners,* and (2) *parts and accessories* for the commodities in (1) above (except commodities in bulk), between the facilities of General Electric Co., at or near Tyler, TX, and points in the U.S. (except AK, HI, and TX), restricted to traffic originating at or destined to the above-named facilities of General Electric Co. (Hearing site: Kansas City, MO.)

MC 64932 (Sub-613F), filed May 19, 1980. Applicant: ROGERS CARTAGE CO., 10735 South Cicero Avenue, Oak Lawn, IL 60453. Representative: Allan C. Zuckerman, 39 South LaSalle Street, Chicago, IL 60603. Transporting *petroleum products,* from the facilities of Amoco Chemicals Corporation, at Natchez, MS, to points in IL, IN, MI, OH, KY, TN, VA, NC, SC, AL, and TX. (Hearing site: Chicago, IL.)

MC 87103 (Sub-67F), filed May 21, 1980. Applicant: MILLER TRANSFER AND RIGGING CO., a corporation, P.O. Box 322, Cuyahoga Falls, OH 44222. Representative: Edward P. Bocko (same address as applicant). Transporting (1) *circuit breakers,* and (2) *equipment, materials, and supplies* used in the

manufacture or distribution of the commodities in (1) above (except commodities in bulk), between the facilities of Westinghouse Electric Corporation, at Pittsburgh, PA, on the one hand, and, on the other, points in the U.S. (except AK and HI), restricted to the transportation of traffic originating at or destined to the named facilities. (Hearing site: Philadelphia, PA or Washington, DC.)

Note.—Dual operations may be involved.

MC 87103 (Sub-68F), filed May 21, 1980. Applicant: MILLER TRANSFER AND RIGGING CO., a corporation, P.O. Box 322, Cuyahoga Falls, OH 44222. Representative: Edward P. Bocko (same address as applicant). Transporting (1) *roof bolters, drills, and mining equipment*, and (2) *equipment, materials and supplies* used in the manufacture or distribution of the commodities in (1) above (except commodities in bulk), between the facilities of Schroeder Brothers Corporation, at McKees Rocks, PA, on the one hand, and, on the other, points in the U.S. (except AK and HI), restricted to the transportation of traffic originating at or destined to the named facilities. (Hearing site: Philadelphia, PA or Washington, DC.)

Note.—Dual operations may be involved.

MC 100892 (Sub-13F), filed May 13, 1980. Applicant: TRANS-SOUTHWEST CARRIERS, INC., 1074 South 500 West, Salt Lake City, UT 84101. Representative: Lee Redman (same address as applicant). Transporting *foodstuffs* (except commodities in bulk, in tank vehicles), between points in AZ, CA, ID, MT, NV, OR, UT, and WA, on the one hand, and, on the other, Clearfield, UT. (Hearing site: Salt Lake City, UT or Las Vegas, NV.)

MC 106523 (Sub-8F), filed May 28, 1980. Applicant: CARLSON TRANSPORT, INC., 3110 Cel Ave., Billings, MT 59104. Representative: Charles A. Murray, Jr., 207A Behner Bldg., 2822 Third Ave. North, Billings, MT 59101. Transporting *salt*, in bulk, from points in UT, to points in MT. (Hearing site: Billings, MT.)

MC 109593 (Sub-13F), filed May 21, 1980. Applicant: H. R. HILL, Box 875, Muskogee, OK 74401. Representative: Max G. Morgan, P.O. Box 1540, Edmond, OK 73034. *Contract carrier*, transporting *canned and preserved foodstuffs*, from the facilities of Heinz USA, at Grand Prairie, TX, to points in LA, AR, OK, and NM, under continuing contract(s) with Heinz USA, Division of H. J. Heinz Company, of Pittsburgh, PA. (Hearing site: Oklahoma City, OK or Dallas, TX.)

MC 110012 (Sub-72F), filed May 30, 1980. Applicant: ROY WIDENER MOTOR LINES, INC., 707 North Liberty Hill Rd., Morristown, TN 37814. Representative: John R. Sims, Jr., 915 Pennsylvania Bldg., 425 13th St. NW., Washington, DC 20004. Transporting (1) *air conditioners, compressors, and humidifying and heating equipment*, and (2) *materials, equipment, and supplies* used in the manufacture of the commodities in (1) above (except commodities in bulk, and those requiring special equipment), between Edison, NJ, on the one hand, and, on the other, points in VA, NC, SC, TN, AL, and GA. (Hearing site: Edison, NJ or Washington, DC.)

MC 110683 (Sub-178F), filed May 20, 1980. Applicant: SMITH'S TRANSFER CORPORATION, P.O. Box 1000, Staunton, VA 24401. Representative: Francis W. McInerny, Suite 502, 1000 16th St. NW., Washington, DC 20036. Over regular routes: transporting *general commodities* (except those of unusual value, household goods as defined by the Commission, classes A and B explosives, commodities in bulk, and those requiring special equipment), serving points in Lee and Prentiss Counties, MS, as intermediate or off-route points in connection with carrier's otherwise authorized regular-route operations. (Hearing site: Washington, DC.)

MC 112422 (Sub-10F), filed May 16, 1980. Applicant: SAM VAN GALDER, INC., 715 South Pearl St., Janesville, WI 53545. Representative: Richard A. Westley, 4506 Regent St. Suite 100, Madison, WI 53705. Transporting *passengers and their baggage*, in the same vehicle with passengers, in round-trip charter and special operations, beginning and ending at points in Dane County, WI, and extending to points in the U.S. (including AK, but excluding HI). (Hearing site: Madison or Milwaukee, WI.)

MC 112422 (Sub-11F), filed May 19, 1980. Applicant: SAM VAN GALDER, INC., 715 South Pearl St., Janesville, WI 53545. Representative: Richard A. Westley, 4506 Regent St. Suite 100, Madison, WI 53705. Transporting *passengers and their baggage*, in the same vehicle with passengers, (1) in round-trip, charter and special operations, beginning and ending at points in Winnebago County, IL, and extending to points in the U.S. (including AK, but excluding HI), and (2) in round-trip charter operations, beginning and ending at points in Rock County, WI, and extending to points in the U.S. (including AK, but excluding IA, IL, IN, KY, MI, MN, OH, PA, TN, and HI). (Hearing site: Rockford or Chicago, IL.)

MC 114273 (Sub-730F), filed May 20, 1980. Applicant: CRST, INC., P.O. Box 68, Cedar Rapids, IA 52406. Representative: Kenneth L. Core (same address as applicant). Transporting *furniture*, and *materials, equipment and supplies* used in the manufacture and distribution of furniture, between points in VA and TX, on the one hand, and, on the other, those points in the U.S. in and east of ND, SD, NE, KS, OK and TX, restricted to traffic originating at or destined to the facilities of Crawford Carisbrook Company. (Hearing site: Chicago, IL, or Washington, DC.)

MC 114273 (Sub-732F), filed May 20, 1980. Applicant: CRST, INC., P.O. Box 68, Cedar Rapids, IA 52406. Representative: Kenneth L. Core (same address as applicant). Transporting (1) *such commodities* as are dealt in, or used by, food business houses, and (2) materials, equipment, and supplies used in the manufacture and distribution of the commodities in (1) above, from Dorsey, MD, to points in MI. (Hearing site: Chicago, IL, or Washington, DC.)

MC 114273 (Sub-733F), filed May 20, 1980. Applicant: CRST, INC., P.O. Box 68, Cedar Rapids, IA 52406. Representative: Kenneth L. Core (same address as applicant). Transporting *materials, equipment, and supplies* used in the manufacture and distribution of trailers, from points in OH to points in IL. (Hearing site: Chicago, IL, or Washington, DC.)

MC 114273 (Sub-734F), filed May 20, 1980. Applicant: CRST, INC., P.O. Box 68, Cedar Rapids, IA 52406. Representative: Kenneth L. Core (same address as applicant). Transporting *such commodities* as are dealt in, or used by manufacturers, converters and distributors of paper and paper products (except commodities in bulk), between Cincinnati, Chillicothe, and Schooleys, OH, on the one hand, and, on the other, points in IA, KS, MO, and MN, restricted to traffic originating at or destined to the facilities of The Mead Corporation. (Hearing site: Chicago, IL, or Washington, DC.)

MC 114273 (Sub-735F), filed May 20, 1980. Applicant: CRST, INC., P.O. Box 68, Cedar Rapids, IA 52406. Representative: Kenneth L. Core (same address as applicant). Transporting *general commodities* (except classes A and B explosives, household goods as defined by the Commission, and commodities in bulk), (1) from Mineola, TX to points in CO, IL, IN, KS, KY, MI, MN, MO, NE, OK, TN, and WI, and (2) between Galena, KS, on the one hand, and, on the other, points in DE, IL, IN, IA, KS, KY, MD, MI, MN, MO, NE, NJ, NY, NC, OH, PA, TN, VA, WV, WI, and

DC. (Hearing site: Chicago, IL or Washington, DC.)

MC 119702 (Sub-78F), filed may 14, 1980. Applicant: STAHLY CARTAGE CO., 119 S. Main Street, Edwardsville, IL 62025. Representative: E. Stephen Heisley, 805 McLachlen Bank Building, 666 Eleventh Street, NW, Washington, DC 20001. Transporting *fertilizer solutions*, in bulk, in tank vehicles, from Clinton, IA, to points in IL, MN, and WI. (Hearing site: Des Moines, IA.)

MC 121372 (Sub-7F), filed may 21, 1980. Applicant: EXPRESS TRANSPORT CO., a corporation 1217 Dalton St., Cincinnati, OH 45203. Representative: Paul F. Beery, 275 E. State St., Columbus, OH 43215. Transporting (1) *iron and steel articles*, and (2) *equipment, materials, and supplies* used in the manufacture of iron and steel articles (except commodities in bulk), between points in OH, PA, WV, MI, IL, IN, and KY. (Hearing site: Columbus, OH.)

MC 125433 (Sub-417F), filed may 22, 1980. Applicant: F-B TRUCK LINE COMPANY, a corporation, 1945 South Redwood Rd., Salt Lake City, UT 84104. Representative: John B. Anderson (same address as applicant). Transporting (1) *video game sets, electronic game sets, video game set cartridges, home computers, and home computer cartridges*, and (2) *materials, equipment, and supplies* used in the manufacture and distribution of the commodities in (1) above, between points in the U.S. (except AK and HI), restricted to the transportation of traffic originating at or destined to the facilities of Atari, Inc. (Hearing site: San Francisco, CA.)

MC 135803 (Sub-17F), filed May 9, 1980. Applicant: WALLACE TRANSPORT, a corporation, 9290 E. Hwy 140, P.O. Box 67, Planada, CA 95365. Representative: Donald M. Fennel (same address as applicant). Transporting (1) *such commodities* as are dealt in by grocery and food business houses, and (2) *materials and supplies* used in the manufacture and distribution of the commodities in (1) above, between the facilities of Ralston Purina Company, at or near Flagstaff, AZ, and points in CA and NV. (Hearing site: San Francisco, CA.)

MC 135803 (Sub-19F), filed May 5, 1980. Applicant: WALLACE TRANSPORT, a corporation, 9290 E. Hwy 140, P.O. Box 67, Planada, CA 95365. Representative: Donald M. Fennel (same address as applicant). Transporting *paper and paper articles*, between points in AZ and NV, on the one hand, and, on the other, points in CA. (Hearing site: San Francisco, CA.)

MC 136343 (Sub-220F), filed May 16, 1980. Applicant: MILTON TRANSPORTATION, INC., P.O. Box 355, Milton, PA 17847. Representative: Herbert R. Nurick, P.O. Box 1166, Harrisburg, PA 17108. Transporting (1) *paper, paper products, plastic*, and *plastic articles*, and (2) *equipment, materials and supplies* used in the manufacture and distribution of the commodities in (1) above, (except commodities in bulk), between points in the U.S. (except AK and HI), restricted to transportation of traffic originating at or destined to the facilities of International Paper Company and its subsidiaries. (Hearing site: New York, NY, or Washington, DC.)

MC 138322 (Sub-25F), filed May 14, 1980. Applicant: BHY TRUCKING, INC., 9231 Whitmore Street, El Monte, CA 91733. Representative: Bobbie F. Albanese, Suite 310, 13215 E. Penn St., Whittier, CA 90602. Transporting *plastic pipe and fittings for plastic pipe*, from the facilities of Apache Plastics, Inc., at (a) Lindsay, Santa Ana and Stockton, CA, and (b) Phoenix, AZ, to points in MN, NV, and UT. (Hearing site: Los Angeles or San Francisco, CA.)

MC 138882 (Sub-361F), filed May 6, 1980. Applicant: WILEY SANDERS TRUCK LINES, INC., P.O. Drawer 707, Troy, AL 36081. Representative: John J. Dykema (same address as applicant). Transporting *such commodities* as are dealt in, or used by, a manufacturer of containers (except commodities in bulk), between the facilities of (a) Brockway Glass Company, and (b) Standard Container Company, on the one hand, and, on the other, those points in the U.S. in and east of MN, IA, MO, OK, and TX. (Hearing site: Pittsburgh, PA, or Montgomery, AL.)

MC 141232 (Sub-11F), filed May 23, 1980. Applicant: STATEWIDE TRUCKING CO., a corporation, 1801 West Oxford Ave., Englewood, CO 80110. Representative: Charles M. Williams, 350 Capitol Life Center, 1600 Sherman St., Denver, CO 80203. Transporting *building materials*, between Denver, CO, on the one hand, and, on the other, those points in KS on and bounded by a line, beginning at the KS-NE State line, and extending along U.S. Hwy 281 to the KS-OK State line, then along the KS-OK State line to U.S. Hwy 81, and then along U.S. Hwy 81 to the KS-NE State line, and then along the KS-NE State line to U.S. Hwy 281. (Hearing site: Denver, CO.)

MC 141443 (Sub-63F), filed May 27, 1980. Applicant: JOHN LONG TRUCKING, INC., 1030 East Denton, Sapulpa, OK 74066. Representative: Wilbur L. Williamson, Suite 615-East, The Oil Center, 2601 Northwest Expressway, Oklahoma City, OK 73112. Transporting *metal containers, container ends, and materials and supplies* used in manufacture of containers, between the facilities of National Can Corporation, at or near Oklahoma City, OK, on the one hand, and, on the other, points in CO. (Hearing site: Oklahoma City, OK.)

Note.—Dual operations may be involved.

MC 141652 (Sub-42F), filed May 23, 1980. Applicant: ZIP TRUCKING, INC., P.O. Box 6126, Jackson, MS 39208. Representative: Paul M. Daniell, P.O. Box 872, Atlanta, GA 30301. Transporting *steel doors, steel door frames*, and *brass, bronze, copper*, and *steel hardware*, from the facilities of Ceco Corporation, at or near Oklahoma City, OK, to points in NV. (Hearing site: Jackson, MS, or New Orleans, LA.)

MC 141722 (Sub-2F), filed May 23, 1980. Applicant: NORM'S DELIVERY SERVICES, INC., 7101 Vineland Ave., North Hollywood, CA 91605. Representative: Eldon M. Johnson, 650 California Street, Suite 2808, San Francisco, CA 94108. Transporting (1) *aircraft, and* (2) *materials, and supplies* used in the assembly, servicing, repair and operation of aircraft, and (3) *airline terminal equipment and supplies*, between points in CA, on the one hand, and, on the other, points in AZ, CA, CO, OR, NV, NM, TX, UT, and WA. (Hearing site: San Francisco, CA or Los Angeles, CA.)

MC 142672 (Sub-142F), filed May 20, 1980. Applicant: DAVID BENEUX PRODUCE & TRUCKING, INC., P.O. Drawer F, Mulberry, AR 72947. Representative: Don Garrison, P.O. Box 1065, Fayetteville, AR 72701. Transporting *such commodities* as are dealt in or used by grocery stores, between the facilities of Griffin Wholesale Grocery Distributors, at or near Van Buren, AR, on the one hand, and, on the other, points in the U.S. (except AK and HI). (Hearing site: Van Buren, AR).

Note.—Dual operations may be involved.

MC 142672 (Sub-143F), filed May 20, 1980. Applicant: DAVID BENEUX PRODUCE & TRUCKING, INC., P.O. Drawer F, Mulberry, AR 72947. Representative: Don Garrison, P.O. Box 1065, Fayetteville, AR 72701. Transporting (1) *sheet glass and lamp parts*, from Ft. Smith and Van Buren, AR, to points in AZ, CA, CO, CT, GA, IL, NY, OH, OR, PA, TX and WA, and (2) *materials, equipment and supplies* used in the manufacture and distribution of the commodities in (1) above, from points in CA to Ft. Smith, and Van Buren, AR. (Hearing site: Ft. Smith, AR.)

Note.—Dual operations may be involved.

MC 142672 (Sub-144F), filed May 23, 1980. Applicant: DAVID BENEUX PRODUCE & TRUCKING, INC., P.O. Drawer F, Mulberry, AR 72947. Representative: Don Garrison, P.O. Box 1065, Fayetteville, AR 71701. Transporting *meats, meat products and meat by-products,* and *articles distributed by meat-packing houses,* as described in Sections A and C of Appendix I to the report in *Descriptions in motor carrier certificates, 61 M.C.C. 209 and 766* (except hides and commodities in bulk), from the facilities of Vernon Calhoun Packing Company, at or near Palestine, TX, to points in the U.S. (except AR, IL, MO, OH, OK and NY), restricted to traffic originating at the named facilities and destined to the indicated destinations. (Hearing site: Dallas, TX or Ft. Smith, AR.)

Note.—Dual operations may be involved.

MC 143002 (Sub-19F), filed May 13, 1980. Applicant: C.D.B., Incorporated, 155 Spaulding, S.E., Grand Rapids, MI 49506. Representative: Karl L. Gotting, 1200 Bank of Lansing Building, Lansing, MI 48933. *Contract carrier,* transporting *materials and supplies* used in the manufacture and distribution of household and personal care products, from points in the U.S. (except AK and HI), to points in MI, under continuing contract(s) with the Amway Corporation. (Hearing site: Lansing, OR, Grand Rapids, MI.)

MC 144323 (Sub-5F), filed May 28, 1980. Applicant: RICHARD P. CHARAPATA, d.b.a. CHARAPATA TRUCKING, N30 W26466 Peterson Drive, Pewaukee, WI 53072. Representative: Daniel R. Dineen, Suite 412, Empire Bldg., 710 North Plankinton Avenue, Milwaukee, WI 53203. *Contract carrier, transporting magazines, books, periodicals and newspapers,* from the facilities of Wisconsin Cuneo Press, Inc., at Milwaukee, WI, to points in CT, DE, IN MA, ME, NJ, NY, OH, PA, VA, and DC under continuing contract(s) with Wisconsin Cuneo Press, Inc. (Hearing site: Milwaukee, WI.)

MC 144732 (Sub-2F), filed May 7, 1980. Applicant: S & S TRUCKING, INC., Alzada Star Route, Belle Fourche, SD 57717, Colony, WY. Representative: J. Maurice Andre, 1734 Sheridan Lake Rd., Rapid City, SD 57701. Transporting *coal,* from, points in Rosebud, Custer, and Powder River Counties, MT, to points in Bowman and Adams Counties, ND. (Hearing site: Belle Fourche, SD.)

MC 145363 (Sub-11F), filed May 27, 1980. Applicant: BREWTON EXPRESS, INC, P.O. Box 508, Winnfield, LA 71483. Representative: Brian Brewton (same address as applicant). *Contract carrier transporting posts, poles, piling, lumber, timbers, cross ties and crossarms,* from the facilities of International Paper Company, in AL, AR, GA, LA, MO, MS, SC, and TX, to points in the U.S. (except AK and HI), under continuing contract(s) with International Paper Company. (Hearing site: Mobile, AL or Shreveport, LA.)

MC 146293 (Sub-61F), filed May 23, 1980. Applicant: REGAL TRUCKING CO., INC., P.O. Box 829, Lawrenceville, GA 30246. Representative: Richard M. Tettelbaum, Fifth Floor, Lenox Towers S., 3390 Peachtree Rd. N.E., Atlanta, GA 30326. Transporting *such commodities* as are dealt in by manufacturers and distributors of electronic equipment, from Savannah, GA, to points in GA, FL, NC, SC, VA, TN, MS, LA, AL, TX, and AR. (Hearing site: Atlanta, GA.)

Note.—Dual operations may be involved.

MC 146313 (Sub-3F), filed May 28, 1980. Applicant: WILLIAM E. MULLENAX, d.b.a. MULLENAX REFRIGERATED TRANSPORT, Route 220 South, Petersburg, WV 26847. Representative: Paul F. Beery, 275 East State St., Columbus, OH 43215. *Contract carrier,* transporting *such commodities* as are dealt in, or used by, grocery and food business houses (except commodities in bulk), between Indianapolis, IN, on the one hand, and, on the other, points in OH, VA, WV, PA, MI, KY, IL, and MO, under continuing contract(s) with the Kroger Co. (Hearing site: Columbus, OH.)

MC 146402 (Sub-20F), filed May 7, 1980. Applicant: CONALCO CONTRACT CARRIER, INC., P.O. Box 968, Jackson, TN 38301. Representative: Charles W. Teske (same address as applicant). Transporting (1) *reinforced concrete slabs,* and (2) *equipment, materials and supplies* used in the manufacture and distribution of reinforced concrete slabs, from the facilities of Modulars, Inc., at Hamilton, OH, to points in AL, AR, CT, DE, GA, IL, IN, KY, LA, MD, MS, MO, NJ, NY, PA, RI, TN, VA, WV, WI, and DC. (Hearing site: Washington, DC.)

Note.—Dual operations may be involved.

MC 147433 (Sub-2F), filed May 22, 1980. Applicant: LONG LEASING CORP., P.O. Box 587, East Jordan, MI 49727. Representative: William B. Elmer, 21635 East Nine Mile Road, St. Clair Shores, MI 48080. Transporting (1) *culverts, snowplow and bulldozer blades, guard rails, and sign posts,* and (2) *materials and supplies* used in the distribution, manufacture, and installation of the commodities in (1) above, between Charlotte, MI, on the one hand, and, on the other, points in the U.S. (except AK, HI, and MI), and ports of entry on the international boundary line between the U.S. and Canada in MI. (Hearing site: Lansing, MI.)

MC 148292 (Sub-7F), filed May 23, 1980. Applicant: J. POSA INC., One N. First St., Fulton, NY 13069. Representative: Terrell C. Clark, P.O. Box 25, Stanleytown, VA 24168. Transporting (1) *malt beverages,* in containers from Detroit, MI, to points in NC, NY, PA, TN, VA, and WV, and (2) *materials, supplies, and equipment* used in the manufacture and distribution of malt beverages, in the reverse direction. (Hearing site: Washington, DC.)

MC 149083 (Sub-1F), filed May 16, 1980. Applicant: J. R. OSBORNE, INC., Upper City Road, Pittsfield, NH 03263. Representative: J. Russell Osborne (same address as applicant). Transporting *malt beverages,* and *carbonated beverages,* in containers, from points in MD, PA, NY, NJ, ME, VT, MA, CT, and RI, to points in NH. (Hearing site: Concord, NH or Portland, ME.)

MC 150802F, filed May 14, 1980. Applicant: NORTHWEST IOWA EXPRESS, INC., 4311 Tyler, Sioux City, IA 51108. Representative: Mayer Kanter, 232 Davidson Bldg., Sioux City, IA 51101. Transporting *silica sand,* from Garnavillo, IA, and Ottawa, MN, to South Sioux City, NE. (Hearing site: Omaha, NE or Washington, DC.)

MC 150813 (Sub-1F), filed May 14, 1980. Applicant: C. & R. EXPRESS, INC., P.O. Box 38, West Jefferson, OH 43162. Representative: Richard H. Brandon, P.O. Box 97, 220 W. Bridge St., Dublin, OH 43017. Transporting (1) *roof and floor joists and beams,* and (2) *equipment, materials and supplies* used in the manufacture, sale, and installation of the commodities in (1) above, between the facilities of Trus Joist Corporation, at or near Delaware, OH, on the one hand, and, on the other, points in the U.S. (except AK and HI). (Hearing site: Columbus, OH.)

Volume No. 220

Decided: June 23, 1980.

By the Commission, Review Board Number 1, Members Carleton, Joyce, and Jones.

MC 3062 (Sub-50F), filed April 16, 1980. Applicant: INMAN FREIGHT SYSTEM, INC., 321 N. Spring Ave., Cape Girardeau, MO 63701. Representative: Guy H. Boles (same address as applicant). Over regular routes transporting *general commodities* (except articles of unusual value, classes A and B explosives, household goods as defined by the Commission, commodities in bulk, and commodities requiring special equipment), between

Cairo, IL, and Paducah, KY, over U.S. Hwy 60, serving all intermediate points. (Hearing site: St. Louis or Jefferson City, MO.)

MC 8842 (Sub-5F), filed April 17, 1980. Applicant: DAWSON BUS SERVICE, INC., 107 East Camden-Wyoming Ave., Camden, DE 19934. Representative: Charles E. Creager, 1329 Pennsylvania Ave., P.O. Box 1417, Hagerstown, MD 21740. Transporting (1) *passengers and their baggage* in the same vehicle with passengers in special operations in round-trip sightseeing and pleasure tours beginning and ending at points in New Castle and Sussex Counties, DE, and extending to points in the U.S. (including AK, but excluding HI); and (2) *passengers and their baggage* in the same vehicle with passengers in one-way or round-trip charter operations between points in DE, on the one hand, and, on the other, points in the U.S. (including AK, but excluding HI). (Hearing site: Newark, DE.)

MC 52793 (Sub-63F), filed April 8, 1980. Applicant: BEKINS VAN LINES CO., a corporation, 3090 Via Mondo, Compton, CA 90221. Representative: Edward G. Villalon, 1032 Pennsylvania Bldg., Pennsylvania Ave. and 13th St. NW., Washington, D.C. 20004. Transporting (1) *Steel doors, security doors, elevator doors and entrances, door frames, doors, partitions and office systems,* and (2) parts, materials and equipment used in their installation from points in NY to points in the U.S. (except AK and HI). (Hearing site: New York, NY, or Washington, DC.)

MC 61502 (Sub-11F), filed April 24, 1980. Applicant: WM. McCULLOUGH TRANSPORTATION CO., INC., 1130 U.S. Highway #1, Elizabeth, NJ 07201. Representative: Ronald N. Cobert, 1730 M St. NW., Suite 501, Washington, DC 20036. Transporting: (1) *general commodities* (except household goods as defined by the Commission, classes A and B explosives, commodities in bulk, and those requiring special equipment) and (2) *empty containers or trailers,* between (a) Baltimore, MD, Philadelphia, PA and Norfolk and Portsmouth, VA, on the one hand, and, on the other, points in CT, MA, NJ, NY, PA, and RI, and (b) between Baltimore, MD, Philadelphia, PA, and Norfolk and Portsmouth, VA. (Hearing site: New York, NY, or Washington, DC.)

MC 61592 (Sub-494F), filed May 1, 1980. Applicant: JENKINS TRUCK LINE, INC., P.O. Box 697, Jeffersonville, IN 47130. Representative: Elisabeth A. DeVine, P.O. Box 737, Moline, IL 61265. Transporting *printed material,* (a) from Cedar Rapids, IA, to points in CO, IL, KY, TN, IN, KS, MI, MN, MO, NE, ND, OH, SD, and WI, and (b) from DeKalb and Chicago, IL, to Cedar Rapids, IA. (Hearing site: Chicago, IL.)

MC 69052 (Sub-42F), filed April 17, 1980. Applicant: REED TRUCKING COMPANY, a corporation, P.O. Box 216, Milton, DE 19968. Representative: Edward G. Villalon, 1032 Pennsylvania Bldg., Pennsylvania Ave. and 13th St. NW., Washington, DC 20004. Transporting *foodstuffs (except in bulk)* from points in (A) Northhampton, Accomac, Frederick and Westmoreland Counties, VA, (B) Somerset, Worcester, Wicomico, Dorchester, Caroline, Talbot, Queen Anne, and Kent Counties, MD, and (C) Kent County, DE, to points in FL, GA, SC, NC, VA, WV, MD, DE, PA, NY, NJ, CT, RI, MA, VT, NH, ME, and OH. (Hearing site: Dover, DE, or Washington, DC.)

MC 71593 (Sub-70F), filed April 25, 1980. Applicant: FORWARDERS TRANSPORT, INC., 1608 E. Second St., Scotch Plains, NJ 07076. Representative: David W. Swenson, 1608 E. Second St., Scotch Plains, NJ 07076. Transporting *general commodities* (except those of unusual value, classes A and B explosives, household goods as defined by the Commission, commodities in bulk, and those requiring special equipment) when moving on bills of lading of freight forwarders, (1) between points in FL, on the one hand, and, on the other, pointsin WA, OR, TX, AL, KS, OK, AR, KY, VA, WV, NC, SC, GA, MS, and LA, (2) between points in IL, on the one hand, and, on the other, points in TN, and (3) between points in NY and NJ, on the one hand, and, on the other, points in NC, restricted to traffic moving on bills of lading of freight forwarders as defined in 49 U.S.C. § 10102(8). (Hearing site: Newark, NJ, New York, NY.)

MC 107012 (Sub-519F), filed April 16, 1980. Applicant: NORTH AMERICAN VAN LINES, INC., 5001 U.S. Hwy 30 West, P.O. Box 988, Fort Wayne, IN 46801. Representative: David D. Bishop, P.O. Box 988, Fort Wayne, IN. Transporting (1) *toys, games,* and *accessories* for toys and games, and (2) *materials, parts and supplies* used in the manufacture of toys and games, from Seattle, WA, to the facilities of Kenner Products, at Cincinnati, OH. (Hearing sites: Cincinnati, OH, or Washington, DC.)

MC 107012 (Sub-520F), filed April 16, 1980. Applicant: NORTH AMERICAN VAN LINES, INC., 5001 U.S. Hwy 30 West, P.O. Box 988, Fort Wayne, IN 46801. Representative: David D. Bishop, P.O. Box 988, Fort Wayne, IN 46801. Transporting (1) *toys, decorations, ornaments, knapsacks, tote bags,* and (2) *materials* used in the manufacture of toys, from points in King County, WA, to Wheeling, IL, St. Paul, MN, Bayonne and Cherry Hill, NJ, and Hauppauge, NY. (Hearing site: Seattle, WA, or Washington, DC.)

MC 107012 (Sub-522F), filed April 25, 1980. Applicant: NORTH AMERICAN VAN LINES, INC., 5001 U.S. Hwy 30 West, P.O. Box 988, Fort Wayne, IN 46801. Representative: David D. Bishop, P.O. Box 988, Fort Wayne, IN 46801, (219) 429-2110. Transporting *new furniture,* and *parts and accessories* for new furniture, (1) from Denver, CO, to points in NC, MO, MI, and IA, and (2) from Asheville, NC, to points in AL, FL, GA, and MI. (Hearing sites: Seattle, WA, or Washington, DC.)

MC 107403 (Sub-1331F), filed April 24, 1980. Applicant: MATLACK, INC., Ten West Baltimore Ave., Lansdowne, PA 19050. Representative: Martin C. Hynes, Jr. (same address as applicant). Transporting *commodities in bulk* between all points in the U.S. (except AK and HI). (Hearing site: Washington, DC.)

MC 114273 (Sub-721F), filed April 4, 1980. Applicant: CRST, INC., P.O. Box 68, Cedar Rapids, IA 52406. Representative: Kenneth L. Core (same address as applicant). Transporting (1) *Paper and paper articles,* and (2) *commodities used in the manufacture and distribution of paper and paper articles,* (a) from points in OH, to St. Joseph, MO, and (b) from St. Joseph, MO, to points in IA, NE, and IL. (Hearing site: Chicago, IL, or Washington, DC.)

Note.—The person or persons who appear to be engaged in common control of another regulated carrier must either file an application under 49 U.S.C. § 11343(A) or submit an affadavit indicating why such approval is unnecessary.

MC 114273 (Sub-722F), filed April 4, 1980. Applicant: CRST, INC., P.O. Box 68, Cedar Rapids, IA 52406. Representative: Kenneth L. Core (same address as applicant). Transporting *lawn and garden care products,* from Marysville, OH, to points in MI. (Hearing site: Chicago, IL, or Washington, DC.)

Note.—The person or persons who appear to be engaged in common control of another regulated carrier must either file an application under 49 U.S.C. § 11343(A) or submit an affadavit indicating why such approval is unnecessary.

MC 114273 (Sub-724F), filed April 4, 1980. Applicant: CRST, INC., P.O. Box 68, Cedar Rapids, IA 52406. Representative: Kenneth L. Core (same address as applicant). Transporting *iron and steel articles,* from Alton and

Peoria, IL, and Muncie, IN, to St. Paul, MN. (Hearing site: Chicago, IL, or Washington, DC.)

Note.—The person or persons who appear to be engaged in common control of another regulated carrier must either file an application under 49 U.S.C. § 11343(A) or submit an affidavit indicating why such approval is unnecessary.

MC 114273 (Sub-726F), filed April 4, 1980. Applicant: CRST, INC., P.O. Box 68, Cedar Rapids, IA 52406. Representative: Kenneth L. Core (same address as applicant). Transporting *non-ferrous metals, ferro manganese, ferro chrome, ferro silicon,* and *ferro alloys,* from points in AL, OH, TN, and WV to points in KS, MO, NE, and TN. (Hearing site: Chicago, IL, or Washington, DC.)

Note.—The person or persons who appear to be engaged in common control of another regulated carrier must either file an application under 49 U.S.C. § 11343(A) or submit an affidavit indicating why such approval is unnecessary.

MC 114273 (Sub-727F), filed April 4, 1980. Applicant: CRST, INC., P.O. Box 68, Cedar Rapids, IA 52406. Representative: Kenneth L. Core (same address as applicant). Transporting (1) *plastic articles* and (2) *material, equipment, and supplies* used in the manufacture and distribution of the commodities in (1) above, between Indianapolis, IN, and Reading, PA, on the one hand, and, on the other, those points in the U.S. in and east of ND, SD, NE, KS, OK, and TX. (Hearing site: Chicago, IL, or Washington, DC.)

Note.—The person or persons who appear to be engaged in common control of another regulated carrier must either file an application under 49 U.S.C. § 11343(a) or submit an affidavit indicating why such approval is unnecessary.

MC 114552 (Sub-253F), filed April 24, 1980. Applicant: SENN TRUCKING COMPANY, a corporation, P.O. Box 220, Newberry, SC 29108. Representative: William P. Jackson, Jr., 3426 N. Washington Blvd., P.O. Box 1240, Arlington, VA 22210. Transporting (1) *pre-cut log houses, parts and components for pre-cut log houses and* (2) *materials, equipment, and supplies* used in their installation, from the facilities of Southland Log Homes, Inc., at or near Irmo, SC, to points in NC, GA, and FL. (Hearing site: Washington, DC.)

MC 119443 (Sub-42F), filed April 25, 1980. Applicant: P. E. KRAMME, INC., Main St., Monroeville, NJ 08343. Representative: James W. Patterson, Esq., 1200 Western Savings Bank Bldg., Philadelphia, PA 19107. Transporting: *chocolate, chocolate liquor, chocolate products, confectioners' products,* and *cocoa butter,* in bulk, in tank vehicles, between those points in the U.S. in and east of IA, MN, MO, OK, and TX. (Hearing site: Philadelphia, PA.)

MC 123993 (Sub-74F), filed April 25, 1980. Applicant: FOGLEMAN TRUCK LINE, INC., P.O. Box 1504, Crowley, LA 70526. Representative: Austin L. Hatchell, 801 Vaughn Bldg., Austin, TX 78701. Transporting: (1) *bags, bagging, steel cotton bale ties, burlap* and *twine,* and (2) *materials, equipment* and *supplies,* used in the manufacture, and distribution of the commodities named in (1) above (except commodities in bulk), between the facilities of Hardin Bag Co., at or near Ft. Worth, TX, on the one hand, and, on the other, points in AR, CO, GA, IL, IA, KS, LA, MN, MS, MO, NE, ND, NC, OK, SD, TN, and TX. (Hearing site: Ft. Worth or Dallas, TX.)

Note.—Dual operations may be involved.

MC 124212 (Sub-108F), filed April 25, 1980. Applicant: MITCHELL TRANSPORT, INC., 6500 Pearl Rd., P.O. Box 30248, Cleveland, OH 44130. Representative: J. A. Kundtz, 1100 National City Bank Bldg., Cleveland, OH 44114. Transporting: (1) *dry commodities,* in bulk, and (2) *cement,* in packages, between points in the U.S. (except AK and HI), restricted to traffic originating at or destined to facilities of Lehigh Portland Cement Company. (Hearing site: Washington, DC.)

Note (1).—The person or persons who appear to be engaged in common control of another regulated carrier must either file an application under 49 U.S.C. § 11343(a) or submit an affadavit indicating why such approval is unnessary.

Note (2).—Dual operations may be involved.

MC 124692 (Sub-333F), filed April 24, 1980. Applicant: SAMMONS TRUCKING, a corporation, P.O. Box 4347, Missoula, MT 59806. Representative: J. David Douglas, P.O. Box 4347, Missoula, MT 59806. Transporting: *prefabricated metal buildings, knocked down,* and *equipment, materials,* and *supplies* used in the construction thereof, (1) between the facilities of American Building Co. at or near Carson City, NV, on the one hand, and, on the other, points in AZ, CA, CO, ID, MT, NV, OR, UT, WA, and WY; (2) from Atlantic, IA, and Jamestown, OH, to the facilities of American Building Co., at or near Carson City, NV, restricted to traffic originating at or destined to the above described facilities. (Hearing site: San Francisco, CA.)

MC 124692 (Sub-334F), filed April 24, 1980. Applicant: SAMMONS TRUCKING, a corporation, P.O. Box 4347, Missoula, MT, 59806. Representative: J. David Douglas, P.O. Box 4347, Missoula, MT, 59806. Transporting *Cement and cement products* in bags, from points in CO to points in WY, NE, KS, and NM. (Hearing site: Denver, CO.)

MC 124692 (Sub-335F), filed April 24, 1980. Applicant: SAMMONS TRUCKING, a corporation, P.O. Box 4347, Missoula, MT, 59806. Representative: J. David Douglas, P.O. Box 4347, Missoula, MT, 59806. Transporting *Crushed Stone,* from the facilities of Mustard Seed Stone and Materials, at or near Wheatland, Wy, to points in AZ, CA, NV, OR, and WA. (Hearing site: Portland, OR.)

MC 128273 (Sub-389F), filed April 15, 1980. Applicant: MIDWESTERN DISTRIBUTION, INC., P.O. Box 189, Fort Scott, KS 66701. Representative: Elden Corban, P.O. Box 189, Fort Scott, KS 66701. Transporting *Television sets, recorders (tape or wire),* and *accessories* for television sets and recorders, (1) from the facilities of the General Electric Company, at Portsmouth, VA, to the facilities of the General Electric Company, at Little Rock, AR, and (2) from the facilities of the General Electric Company at Little Rock, AR, to points in AZ, LA, MS, NM, OK, and TX. (Hearing site: Little Rock, AR or Washington, DC.)

Note.—The person or persons who appear to be engaged in common control of another regulated carrier must either file an application under 49 U.S.C. § 11343(a) or submit an affadavit indicating why such approval is unnecessary.

MC 128273 (Sub-390F), filed April 15, 1980. Applicant: MIDWESTERN DISTRIBUTION, INC., P.O. Box 189, Fort Scott, KS 66701. Representative: Elden Corban, P.O. Box 189, Fort Scott, KS 66701. Transporting *such commodities* as are dealt in or used by producers and distributors of foodstuffs, between Humboldt and Memphis, TN, on the one hand, and, on the other, points in the U.S. (except AK and HI). (Hearing site: Los Angeles, CA, or Washington, DC.)

Note.—The person or persons who appear to be engaged in common control of another regulated carrier must either file an application under 49 U.S.C. § 11343(a) or submit an affadavit indicating why such approval is unnecessary.

MC 129032 (Sub-123F), filed April 16, 1980. Applicant: TOM INMAN TRUCKING, INC., 5656 South 129th East Ave., Tulsa, OK 74145. Representative: Larry J. Kramer, 5656 South 129th East Ave., Tulsa, OK 74145. Transporting (1) *chemcials, and industrial and food additives, and* (2) *materials, equipment, and supplies* used in the manufacture and distribution of the commodities in (1) above (except in bulk, in tank vehicles), between points in the U.S. (except AK and HI), restricted to traffic

originating at or destined to the facilities used by Kelco Division of Merck and Company, Inc. (Hearing site: Dallas, TX or St. Louis, MO.)

MC 129262 (Sub-6F), filed April 17, 1980. Applicant: AYERS AND MADDUX, INC., 1680 Hilltop Dr., Chula Vista, CA 92011. Representative: Fred H. Mackensen, c/o Murchison & Davis, 9454 Wilshire Blvd., Suite 400, Beverly Hills, CA 90212. Transporting, *alcohol, alcoholic liquors, brandy* and *cordials*, in bulk, in tank vehicles between Bardstown, KY, Silverton, OH, Fort Smith, AR, Plainfield, IL, New Orleans, LA, and Scobeyville, NJ on the one hand, and, on the other, points in the U.S. (including AK and HI), restricted to traffic originating at or destined to the facilities of Hiram Walker & Sons. (Hearing site: Los Angeles, CA.)

MC 138283 (Sub-13F), filed April 14, 1980. Applicant: DANA TRUCKING CORPORATION, P.O. Box 6, Round Lake, MN 56167. Representative: Michael J. Ogborn, P.O. Box 82028, Lincoln, NE 68501. *Contract carrier* transporting (1) *malt beverages*, in containers from St. Louis, MO, and LaCrosse, WI, to Worthington, MN, and (2) *empty containers*, in the reverse direction under continuing contract(s) with Hagen-Cooper Distributing Company, of Worthington, MN (Hearing site: Minneapolis, MN.)

MC 138882 (Sub-360F), filed April 16, 1980. Applicant: WILEY SANDERS TRUCK LINES, INC., P.O. Drawer 707, Troy, AL 36081. Representative: John J. Dykema, P.O. Drawer 707, Troy, AL 36081. Transporting, (1) *Plastic pipe, valves, fittings, and accessories*, (2) *furnaces*, and (3) *materials, equipment and supplies* used in their manufacture, distribution, and installation (except commodities in bulk, in tank vehicles) between points in the U.S. (except AK and HI), restricted to traffic originating at or destined to the facilities of ARI Products/North America, Inc. (Hearing site: Atlanta, GA or Montgomery, AL.)

MC 139973 (Sub-82F), filed April 25, 1980. Applicant: J. H. WARE TRUCKING, INC., P.O. Box 398, Fulton, MO 65251. Representative: Larry D. Knox, 600 Hubbell Bldg., Des Moines, IA 50309. Transporting *(1) Construction machinery, equipment and parts; (2) agricultural machinery, implements, equipment and parts; (3) valves and fittings; (4) electrical appliances, equipment and parts; (5) automotive equipment, accessories and parts, (6) chains; (7) pumps; (8) compressors; (9) iron and steel articles, and (10) equipment, materials, and supplies*, (except commodities in bulk) *used in the manufacture, or distribution of the commodities in (1) through (9)*. Between Boaz, AL, Florence, KY, St. Louis, MO, Norwood, MA, Boyertown, PA, Holyoke, MA, York, PA, Canton, MA, Maspeth, NY, Clemmons, NC, Avon, MA, Minneapolis, MN, Huntsville, AL, Taneytown, MD, Shawnee, OK, Mountainside, NJ, Buffalo, NY, Harrison, NJ, Wellsville, NY, East Orange, NJ, and Cortland, NY, on the one hand, and, on the other, those points in the U.S. in and east of ND, SD, NE, KS, OK and TX, restricted to traffic originating at or destined to the facilities of McGraw-Edison Co., or its subsidiaries. (Hearing site: Kansas City, MO.)

MC 139973 (Sub-83F), filed April 25, 1980. Applicant: J. H. WARE TRUCKING, INC., P.O. Box 398, Fulton, MO 65251. Representative: Larry D. Knox, 600 Hubbell Bldg., Des Moines, IA 50309. Transporting *steel wire rope and fittings*, between Sedalia, MO, on the one hand, and, on the other, points in the U.S. (except AK and HI). (Hearing site: St. Louis, MO.)

MC 140612 (Sub-84F), filed April 16, 1980. Applicant: ROBERT F. KAZIMOUR, P.O. Box 2207, Cedar Rapids, IA 52406. Representative: J. L. Kazimour (same address as applicant). Transporting *such commodities as are dealt in or used by retail stores, (except foodstuffs, and commodities in bulk in tank vehicles)*. Between Dallas, TX, on the one hand, and, on the other, points in the U.S. (except AK and HI). (Hearing site: Dallas, TX.)

MC 141743 (Sub-4F), filed April 17, 1980. Applicant: MARK IV CHARTER LINES, INC., P.O. Box 697 (24500 South Vermont Ave.), Harbor City, CA 90710. Representative: Eldon M. Johnson, 650 California St., Suite 2808, San Francisco, CA 94108. Transporting *passengers and their baggage, in the same vehicle with passengers, in special or charter operations*. Beginning and ending at points in Los Angeles and Orange Counties, CA, and extending to points in AZ, CA, CO, ID, MT, NV, NM, OR, UT, WA, and WY. (Hearing site: Los Angeles or Harbor City, CA.)

MC 144622 (Sub-166F), filed April 15, 1980. Applicant: GLENN BROTHERS TRUCKING, INC., P.O. Box 9343, Little Rock, AR 72219. Representative: Phillip G. Glenn (same address as applicant). Transporting *foodstuffs* (except in bulk), between LaJoya, TX, on the one hand, and, on the other hand, points in the U.S. (except AK and HI). (Hearing site: Little Rock, AR.)

Note.—Dual operations may be involved.

MC 146643 (Sub-42F), filed April 25, 1980. Applicant: INTER-FREIGHT TRANSPORTATION, INC., 655 East 114th St., Chicago, IL 60628. Representative: Marc J. Blumenthal, 39 South LaSalle St., Chicago, IL 60603. *Contract carrier*, transporting *foodstuffs* (except in bulk), from the facilities of American Home Foods, Division of American Home Products Corporation, at or near LaPorte, IN, to points in IL, MO, KS, MN, and the Lower Peninsula of MI, under a continuing contract(s) with American Home Foods of New York, NY. (Hearing site: Chicago, IL.)

Note.—Dual operations may be involved.

MC 146753 (Sub-11F), filed April 15, 1980. Applicant: SAM YOUNG, INC., P.O. Box 337, Wolcott, IN 47995. Representative: Donald W. Smith, P.O. Box 40248, Indianapolis, IN 46240. Transporting (1) *rubber tank liners*, from Schoolcraft, MI, to points in the U.S. (except AK and HI), and (2) *materials, equipment* and *supplies* used in the manufacture and distribution of rubber tank liners in the reverse direction. (Hearing site: Detroit, MI.)

Note.—Dual operations may be involved.

MC 146782 (Sub-31F), filed April 14, 1980. Applicant: ROBERTS CONTRACT CARRIER CORPORATION, 300 First Ave., South, Nashville, TN 37201. Representative: James Rex Raines, 300 First Ave., South, Nashville, TN 37201. Transporting (1) *iron* and *steel articles*, and (2) *equipment, materials* and *supplies* used in the manufacture of the commodities in (1) above (except commodities in bulk), between the facilities of Staircraft, Inc., at or near Nashville, TN, on the one hand, and, on the other, those points in the U.S. in and east of ND, SD, NE, KS, OK, and TX, restricted to traffic originating at or destined to the above named facilities. (Hearing site: Nashville, TN, or Atlanta, GA.)

MC 146993 (Sub-3F), filed April 25, 1980. Applicant: RAYMOND L. VAUGHAN, d.b.a. VAUGHAN CARTAGE COMPANY, P.O. Box 1798, LaGrange, GA 30241. Representative: C. E. Walker, P.O. Box 1098, Columbus, GA 31902. Transporting *general commodities* (except commodities in bulk) in shipper or railroad-owned trailers, (1) between Columbus, GA, on the one hand, and, on the other, points in Heard, Troup, Fulton, Meriwether, and Harris Counties, GA, and Randolph, Russell, Chambers, Lee, and Tallapoosa Counties, AL, and (2) between points in Muscogee County, GA, on the one hand, and, on the other, Atlanta, GA, restricted to traffic having a prior or subsequent movement by rail. (Hearing site: Atlanta, GA.)

Note.—Any certificate *issued herein to the extent it authorizes* the movement of classes A and B explosives or other dangerous

commodities, shall be limited to a 5-year period from its date of issue.

MC 147193 (Sub-2F), filed April 29, 1980. Applicant: MARTIN RUITER d.b.a. MARTIN'S FEED CO., P.O. Box 189, Custer, WA 98240. Representative: James T. Johnson, 1610 IBM Building, Seattle, WA 98101. Transporting *malt beverages,* and *wines,* from points in CA, to Bellingham and Mount Vernon, WA. (Hearing site: Seattle, WA.)

MC 147223 (Sub-4F), filed April 21, 1980. Applicant: AMERICAN PRIORITY ENTERPRISES, INC., 408 E. Elizabeth Ave., Linden, NJ 07601. Representative: Robert B. Pepper, 168 Woodbridge Ave., Highland Park, NJ 08904. *Contract carrier,* transporting *drugs, pharmaceuticals, dental and hospital supplies, store displays, printed and unprinted matter, stomahesive products and return merchandise,* between the facilities and divisions of E. R. SQUIBB & SON, INC., at or near (a) Morrow, GA, (b) Rolling Meadows, IL, (c) Sharonville, OH, (d) Houston, TX, (e) Mission, KS, (f) La Mirada and Los Angeles, CA, (g) Bridgewater, New Brunswick and Somerset, NJ, (h) Eastgate, WA, (i) Michigan City, IN, (j) Savage, MD, (k) Durham, Kenly and Greensboro, NC, and (l) Smithtown, NY, on the one hand, and, on the other, points in the U.S. (except AK and HI), under a continuing contract(s) with E. R. SQUIBB & SON, INC., of New Brunswick, NJ. (Hearing site: Newark, NJ.)

MC 147323 (Sub-12F), filed April 21, 1980. Applicant: HADDAD TRANSPORTATION, INC., 5000 Wyoming Ave., Dearborn, MI 48126. Representative: John P. Haddad, 5000 Wyoming Ave., Dearborn, MI 48126. Transporting (1) *iron and steel articles* and (2) *equipment, materials and supplies* used in the manufacture, or distribution, of the commodities in (1) above (except commodities in bulk), between the facilities of Tri-Metals, Inc., at Utica, MI, on the one hand, and on the other, points in the U.S. (except AK and HI), restricted to traffic originating at or destined to the named facilities. (Hearing site: Detroit, MI, or Chicago, IL.)

Note.—Dual operations may be involved.

MC 147323 (Sub-13F), filed April 25, 1980. Applicant: HADDAD TRANSPORTATION, INC., 5000 Wyoming Ave., Dearborn, MI 48126. Representative: John P. Haddad (same address as applicant). Transporting *such commodities* as are dealt in or used by manufacturers, processors and distributors or iron and steel articles, (except commodities in bulk), between points in the U.S. (except AK and HI), restricted to traffic originating at or destined to the facilities of Saber Steel & Processing, Inc. (Hearing site: Detroit, MI or Washington, DC.)

Note.—Dual operations may be involved.

MC 147672 (Sub-2F), filed April 15, 1980. T. D. REEVES d.b.a. T & R TRUCKING, P.O. Box 36, Darden, TN 38328. Representative: Martin and Perky, 43 N. Broad, Lexington, TN 38351. *Contract carrier,* transporting *lightweight aggregate,* in bulk, in dump vehicles, from West Memphis, AR, to Lexington, TN, under continuing contract(s) with E. L. Thomas & Sons, Inc., of Lexington, TN. (Hearing site: Jackson, Memphis, or Nashville, TN.)

MC 148343 (Sub-2), filed April 14, 1980. Applicant: W. C. FORE TRUCKING, INC., P.O. Box 3058, Dedeaux Rd., Gulfport, MS 39503. Representative: Charles R. Galloway, P.O. Drawer H, 2300 14th St., Gulfport, MS 39501. *Contract carrier,* transporting *posts, poles and piling,* from Gulfport, MS, and Mobile, AL, to points in TX, OK, KS, CO, IA, SD, LA, NE, MS, AL, FL, AR, TN, MO, IL, WI, IN, MI, PA and NJ, under continuing contract(s) with Crown Zellerbach Corporation, of Bogalusa, LA. (Hearing site: Gulfport, MS, or New Orleans, LA.)

MC 148702 (Sub-2F), filed April 14, 1980. Applicant: A. PREWITT SAMS d.b.a. SAMS CARPET SERVICE, 100 Talbott St., Winchester, KY 40391. Representative: Harry Ross, 58 South Main St., Winchester, KY 40391. Transporting *floor coverings* and *articles* used in their installation from those points in GA, north of Interstate Hwy 20, to points in Clark, Fayette, Franklin, Woodford, Montgomery, and Scott Counties, KY. (Hearing site: Louisville, KY.)

MC 149033 (Sub-2F), filed April 29, 1980. Applicant: WILLIAM R. MILCZSKI, JR, Rural Route 2, Plattsmouth, NE 68048. Representative: Marshall D. Becker, Suite 610, 7171 Mercy Rd, Omaha, NE 68106. *Contract carrier,* transporting *lumber,* from points in AR and OK to points in NE, KS, MO, IA, MN, WI, SD, and ND, under continuing contract(s) with Continental Timber Co., Inc., of Halstead, KS. (Hearing site: Omaha, NE, or Wichita, KS.)

MC 149142 (Sub-2F), filed April 30, 1980. Applicant: WESLEY J. REYNOLDS, d.b.a. W. R. Trucking, 3022 MacArthur Blvd., Okland, CA 94602. Representative: Eugene Q. Carmody, 15523 Sedgeman St., San Leandro, CA 94579. *Contract carrier,* transporting *electical transformers and parts, lightning arrestors and parts, cutouts and parts, insulators, batteries, pole line construction material, capacitors, and circuit breakers,* (1) from Visalia, CA, to point in OR, WA, ID, NV and AZ, and (2) from Lake Oswego, OR, to points in CA, ID, NV, and WA, under continuing contract(s) with McGraw-Edison Company Power Systems Division, of Pittsburgh, PA 15230. (Hearing site: San Francisco, CA.)

MC 150632 (Sub-1F), filed April 30, 1980. Applicant: KWIKWAY DELIVERY SERVICE, INC., P.O. Box 113, Philadelphia, MS 39350. Representative: Kim G. Meyer, P.O. Box 872, Atlanta, GA 30301. *Contract carrier,* transporting *such commodities as are dealt in or used by,* manufacturers of cosemtics and toilet preparations, from Philadelphia, MS, to points in Adams, Amite, Attala, Bolivar, Calhoun, Carroll, Chickasaw, Choctaw, Claiborne, Clark, Clay, Coahoma, Copiah, Covington, Forrest, Franklin, Greene, Grenada, Hinds, Holmes, Humphreys, Issaquena, Itawamba, Jasper, Jefferson, Jefferson Davis, Jones, Kemper, Lamar, Lauderdale, Leake, Lee, LeFlore, Lincoln, Lowndes, Madison, Marion, Monroe, Montgomery, Newton, Noxubee, Oktibbeha, Panola, Perry, Pike, Pototoc, Quitman, Rankin, Scott, Sharkey, Simpson, Smith, Sunflower, Tallahatchie, Tunica, Walthall, Warren, Washington, Wayne, Webster, Wilkerson, Winston, Yalobusha, and Yazoo Counties, Ms, under continuing contract(s) with Avon Products, Inc., of Atlantic, GA. (Hearing site: Jackson, MS, or Atlanta, GA.)

MC 150603 (Sub-1F), filed April 30, 1980. Applicant: ARNOLD TUNE, d.b.a. TUNE TRUCKING, R. R. #1, Kasson, MN 55944. Representative: Richard D. Howe, 600 Hubbell Bldg, Des Moines, IA 50309. Transporting (1), *Concrete batchers, mixers, hoppers and bins,* and (2) *materials, supplies and parts* used in the manufacture and distribution of the commodities in (1) above, from the facilities of McNeilus Truck and Manufacturing, Inc.) at Dodge Center, MN, to points in CO, CT, GA, IL, MO, ND, OH, SD, TX, and WI. (Hearing site: Des Moines, IA, or Minneapolis MN.)

MC 150723F, filed April 30, 1980. Applicant: MIARER TRANSPORTATION, INC., 3229 County Rd. 59, Helena, OH 43435. Representative: James Duvall, P.O. Box 97, 220 West Bridge St., Dublin, OH 43017. Transporting: *lime, limestone, limestone products, high temperature bonding mortar and materials used in the manufacture of high temperature bonding mortar,* between points in Sandusky County, OH, on the one hand, and, on the other, points in IN, IL, KY,

MI, OH, PA, and WV. (Hearing site: Columbus, OH.)

MC 150743 (Sub-1F), filed April 29, 1980. Applicant: TRANSOCEAN TRANSPORT, INC., 930 Hialeah Dr., Hialeah, FL 33010. Representative: Richard B. Austin, Suite 320, Rochester Bldg., 8390 NW 53 St., Miami, FL 33166. (1) *general commodities* (except those of unusual value, classes A and B explosives, household goods as defined by the Commission, commodities in bulk, and those requiring the use of special equipment), in containers or trailers having an immediately prior or subsequent movement by water, and (2) *empty containers,* trailers, or trailer chassis, between points in Dade, Broward, and Palm Beach Counties, FL. Note: Dual operations may be involved: Note: The person or persons who appear to be engaged in common control of another regulated carrier must either file an application under 49 U.S.C. § 11343(A) or submit an affidavit indicating why such approval is unnecessary. (Hearing site: Miami, FL.)

Volume No. 230

Decided: June 24, 1980

By the Commission, Review Board Number 3, Members Parker, Fortier and Hill

MC 9812 (Sub-20F), filed May 14, 1980. Applicant: C. F. KOLB TRUCKING COMPANY, INC. Rural Rte 1, Box 294, Mt. Vernon, IN 47620. Representative: Constance J. Goodwin, Suite 800 Circle Tower, Five East Market St., Indianapolis, IN 46204. Transporting (1) *roofing materials and roofing products,* and (2) *equipment, materials and supplies* used in the installation of the commodities in (1) above, between the facilities of Owens-Corning Fiberglas Corp., at Jacksonville, FL, Atlanta, GA, Summitt, IL, Brookville, IN, Detroit, MI, Minneapolis, MN, Hazelwood, MO, N. Kansas City, MO, Medine, OH, Memphis, TN, on the one hand, and, on the other, points in AL, AK, FL, GA, IL, IN, IA, KS, KY, LA, MO, MS, MI, MN, NV, ND, OH, SC, TN and WV. (Hearing site: Columbus, OH or Chicago, IL.)

MC 32882 (Sub-150F), filed May 27, 1980. Applicant: MITCHELL BROS. TRUCK LINES, 3841 North Columbia Blvd., Portland, OR 97217. Representative: David J. Lister, P.O. Box 17039, Portland, OR 97217. Transporting: *(1)(a) Pumps, and (b) Mining Equipment and Mining Machinery. (2) Equipment, materials and supplies used in the manufacture of commodities in (1) above,* (except commodities in bulk) between Salt Lake County, UT, on the one hand, and, on the other, points in the U.S. (except AK and HI), restricted to traffic originating at or destined to the facilities of the Galigher Co. (Hearing site: Salt Lake City, UT.)

MC 69833 (Sub-157F), filed May 8, 1980. Applicant: ASSOCIATED TRUCK LINES, INC., 200 Monroe Avenue, NW, 6th Floor, Grand Rapids, MI 49503. Representative: Harry Pohlad (same address as applicant). Transporting: *General Commodities* (except those of unusual value, classes A and B explosives, household goods as defined by the Commission, commodities in bulk, and those requiring special equipment), from Rockford, IL to Minneapolis, MN, over Interstate Hwy 90 to junction Interstate Hwy 94, then over Interstate Hwy 94 and return over the same route, serving no intermediate points. (Hearing site: Chicago, IL or Detroit, MI.)

MC 80443 (Sub-41F), filed May 9, 1980. Applicant: OVERNITE EXPRESS, INC., 2550 Long Lake Road, Roseville, MN 55113. Representative: Samuel Rubenstein, P.O. Box 5, Minneapolis, MN 55440. Transporting: (1) *Plastic Articles;* (2) *Chemicals,* (3) *Petroleum Products;* and, (4) *Materials, Equipment and supplies* used in the manufacture of (1), (2) and (3), above, (restricted in (1) thru (4) above against transportation of commodities in bulk, in tank vehicles), between the facilities utilized by Amoco Chemicals Corporation on the one hand, and, on the other, points in the U.S. (except AK and HI). (Hearing site: Minneapolis or St. Paul, MN.)

MC 82492 (Sub-260F), filed May 9, 1980. Applicant: MICHIGAN & NEBRASKA TRANSIT CO., IN., 2109 Olmstead Road, P.O. Box 2853. Representative: Neil E. Hannan (same address as applicant). Transporting (1) *starch and chemicals* (except in bulk) from the facilities of National Starch & Chemical Corporation at or near Indianapolis, IN, to points in NY in and west of Broome, Cortland, Onondaga and Oswego Counties, and points in OH, KY, TN, MO, KS, NE, MN, IA, IW, IL, IN, PA, and MI, and (2) *materials, equipment and supplies* (used in the manufacture of commodities in (1) above), from points in the above-named destination States, to the facilities of National Starch & Chemcial Corporation at or near Indianapolis, IN, and Meredosia, Il. (Hearing site: Washington, DC, or Philadelphia, PA.)

MC 107002 (Sub-583F), filed May 21, 1980. Applicant: MILLER TRANSPORTERS, INC., P.O. Box 1123, Jackson, MS 39205. Representative: John J. Borth, P.O. Box 8573, Battlefield Station, Jackson, MS 39204. Transporting: *Asphalt,* in bulk, in tank vehicles, from the facilities of Trumbull Asphalt Co., at or near Atlanta, GA to points in AL. (Hearing site: Atlanta, GA or Birmingham, AL.)

MC 107012 (Sub-527F), filed May 1, 1980. Applicant: NORTH AMERICAN VAN LINES, INC., 5001 U.S. Highway 30 West, P.O. Box 988, Fort Wayne, IN 46801. Representative: Bruce W. Boyarko (same address as applicant). Transporting: *Plastic bathtubs* and *plastic accessories,* from the facilities of BeBe Manufacturing Co. Inc. at or near El Dorado, AR to points in AL, AZ, CO, FL, GA, ID, KS, MS, NC, OR and VA. (Hearing sites: Atlanta, GA or Dallas, TX.)

MC 107012 (Sub-528F), filed May 1, 1980. Applicant: NORTH AMERICAN VAN LINES, INC., 5001 U.S. Highway 30 West, P.O. Box 988, Fort Wayne, IN 46801. Representative: David D. Bishop (same address as applicant). Transporting: *Paper and plastic articles* (a) between the facilities of Solo Cup Company at or near Chicago, Urbana, and Highland Park, IL, Grandview, MO, Santa Paula, CA, Ada, OK, and Baltimore and Federalsburg, MD, and (b) from the facilities of Solo Cup Company at or near Chicago, Urbana and Highland Park, IL, Grandview, MO, Santa Paula, CA, Ada, OK, and Baltimore and Federalsburg, MD to Atlanta, GA, Tampa and Miami, FL, Boston, MA, Teterboro, NJ, Detroit, MI, Kenner, LA, Dallas, TX, Seattle, WA, Denver, CO, Sante Fe Springs and Union City, GA and Greenville, SC, and (c) from the facilities of Solo Cup Company at or near Ada, OK, to points in CA, and (d) from the facilities of Solo Cup Company at or near Chicago, Urbana and Highland Park, IL to Dallas, TX, and points in GA, FL, AL and LA. (Hearing sites: Chicago, IL or Washington, DC.)

MC 107012 (Sub-529F), filed May 5, 1980. Applicant: NORTH AMERICAN VAN LINES, INC., 5001 U.S. Highway 30 West, P.O. Box 988, Fort Wayne, IN 46801. Representative: David D. Bishop (same address as applicant). Transporting: (1) *paper, paper products, plastic articles,* and *building materials and,* (2) *materials, equipment, and supplies* used in the manufacture of the commodities named in (1) above (except commodities in bulk, and commodities which because of size or weight require the use of specialized equipment), between points in the U.S. Restricted to traffic originating at or destined to facilities utilized by International Paper Company and its subsidiaries. (Hearing sites: New York, NY or Washington, DC.)

MC 107403 (Sub-1333F), filed May 2, 1980. Applicant: MATLACK, INC., Ten West Baltimore Avenue, Lansdowne, PA 19050. Representative: Martin C. Hynes,

Jr., (same address as applicant). Transporting *Liquid chemicals, in bulk, in tank vehicles*, from Oak Creek, WI to points in the U.S. (except AK and HI). Hearing site: Washington, DC.

MC 109632 (Sub-33F), filed May 12, 1980. Applicant: LOPEZ TRUCKING, INC., 131 Linden St., Waltham, MA 02154. Representative: Joseph M. Klements, 84 State St., Boston, MA 02109. Transporting (1) *general commodities* (except those of unusual value, and classes A and B explosives), in containers or in trailers, having an immediately prior or subsequent movement by water, and (2) *empty containers, trailers and trailer chassis*, between ports of Portland, ME, Portsmouth, NH, Boston, New Bedford, and Fall River, MA, Providence, RI, New London, New Haven and Bridgeport, CT, New York, Albany and Poughkeepsie, NY, Port Newark, Port Elizabeth, Camden, Perth Amboy, Carteret, Jersey City, Sewaren, and Port Reading, NJ, Philadelphia, PA, Wilmington, DE, and Baltimore, MD, and inland ports on the Hudson and Delaware Rivers, on the one hand, and, on the other, points in ME, NH, VT, MA, RI, CT, NY, NJ, PA, DE, MD, VA and DC. (Hearing site: Boston, MA.)

MC 109633 (Sub-46F), filed May 12, 1980. Applicant: ARBET TRUCK LINES, INC., P.O. Box 697, Sheffield, IL 61361. Representative: Arnold L. Burke, 180 North LaSalle St., Chicago, IL 60601. Transporting *Paper Bags* between points in the U.S., (except AK and HI), restricted to traffic originating at or destined to the facilities of Mobil Chemical Company, Plastics Division. (Hearing site: Washington, DC.)

MC 112223 (Sub-132F), filed May 12, 1980. Applicant: QUICKIE TRANSPORT COMPANY, 1700 New Brighton Blvd., Minneapolis, MN 55413. Representative: Earl Hacking (same address as applicant). Transporting *Liquified Petroleum Gas* (LPG), in bulk, from Mentor, MN, to points in ND and SD. (Hearing site: Minneapolis, MN or St. Paul, MN.)

MC 113362 (Sub-393F), filed June 4, 1980. Applicant: ELLSWORTH FREIGHT LINES, INC., 310 East Broadway, Eagle Grove, IA 50533. Representative: Milton D. Adams, P.O. Box 429, Austin, MN 55912. Transporting (1) *floor coverings, ceiling tile, insulating material and insulating boards, insulating walls, and building walls*, and (2) *equipment, materials and supplies* used in the manufacture, installation, and distribution of commodities in (1) above, (except in bulk), between the facilities of Armstrong World Industries, Inc., at points in IL, FL, GA, PA, and MS, on the one hand, and, on the other, those points in the U.S. in and east of ND, SD, NE, KS, OK, and TX. (Hearing site: Philadelphia, PA or Washington, DC.)

MC 113843 (Sub-282F), filed May 9, 1980. Applicant: REFRIGERATED FOOD EXPRESS, INC., 316 Summer St., Boston, MA 02210. Representative: Lawrence T. Sheils, 316 Summer St., Boston, MA 02210. Transporting *edible animal fats or oils*, and *blends thereof*, and *oleomargarine* (except commodities in bulk), from Bradley, IL to points in CT, DE, MA, MD, ME, NH, NJ, NY, OH, PA, RI, VT, VA, WV, and DC, restricted to traffic originating at the facilities of Bunge Edible Oil Corp. (Hearing site: Chicago, IL.)

MC 114552 (Sub-256F), filed May 14, 1980. Applicant: SENN TRUCKING COMPANY, P.O. Drawer 220, Newberry, SC 29108. Representative: William P. Jackson, Jr., 3426 N. Washington Boulevard, P.O. Box 1240, Arlington, VA 22210. Transporting *pre-cast concrete products*, (1) from Ashland, VA, to points in OH, PA, NJ, DE, MD, WV, KY, VA, TN, NC, and DC, and (2) from Charlotte, NC, to points in VA, WV, TN, NC, SC, GA, and AL. (Hearing site: Washington, DC.)

MC 116273 (Sub-255F), filed May 6, 1980. Applicant: D & L TRANSPORT, INC., 3800 South Laramie Avenue, Cicero, IL 60650. Representative: William R. Lavery (same address as applicant). Transporting *lubricating oil*, in bulk, in tank vehicles, from Port Huron, MI and Olive Branch, MS, to points in PA and TX. (Hearing site: Chicago, IL.)

MC 121272 (Sub-6F), filed May 16, 1980. Applicant: HESS TRUCKING CO., 1000 W. Chocolate Ave., Hershey, PA 17033. Representative: J. Bruce Walter, Esquire, P.O. Box 1146, Harrisburg, PA 17108. Transporting *such commodities* as are dealt in by retail and wholesale discount and department stores from Derry Twp., Dauphin County, PA to Pottstown and Quakertown, PA restricted to traffic destined to facilities utilized by K-Mart Corporation. (Hearing site: Harrisburg, PA, or Washington, DC.)

MC 124673 (Sub-53F), filed May 12, 1980. Applicant: FEED TRANSPORTS, INC., P.O. Box 2167, Amarillo, TX 79105. Representative: Thomas F. Sedberry, P.O. Box 2165, Austin, TX 78768. Transporting *Liquid Fertilizer Ingredients and Fertilizer Solutions*, from points in Beaver and Woodward Counties, OK, and McPherson County, KS, to points in TX, OK, KS, NE and CO. (Hearing site: Dallas, TX, or Kansas City, MO.)

MC 124673 (Sub-54F), filed May 19, 1980. Applicant: FEED TRANSPORTS, INC., P.O. Box 2167, Amarillo, TX 79105. Representative: Thomas F. Sedberry, P.O. Box 2165, Austin, TX 78768. Transporting *(1) Animal and Poultry Feed and Feed Ingredients*, between the facilities of Ralston Purina Company at or near Oklahoma City, OK, Wichita and Liberal, KS and Kansas City, MO, on the one hand, and, on the other, points in AZ, AR, KS, MO, OK and TX; *(2) Meat and Bone Meal and Dry Rendered Tankage, in bulk*, from points in Moore, Hale, Potter and Parmer Counties, TX, to points in AR, KS, MO and OK; *(3) Animal and Poultry Feed and Feed Ingredients*, from Lubbock County, TX, to points in IL, IN, KY, SD and WI. (Hearing site: Dallas, TX.)

MC 128333 (Sub-6F), filed May 8, 1980. Applicant: LES CALKINS TRUCKING, INC., 19501 North Highway 99, Acampo, CA 95220. Representative: Alan F. Wohlstetter, 1700 K Street, N.W., Washington, DC 20006. Transporting *fly ash and pozzolan*, in bulk, between the facilities of Lassenite Industries at Hallelujah Junction, CA, on the one hand, and, on the other, points in NV and points in CA north of the northern boundaries of San Luis Obispo, Kern and San Bernardino Counties, CA. (Hearing site: Sacramento, CA.)

MC 128462 (Sub-8F), filed May 12, 1980. Applicant: SCHULTZ & SON TRUCK LINE, INC., P.O. Box 36, Long Prairie, MN 56347. Representative: Gene P. Johnson, P.O. Box 2471, Fargo, ND 58108. *Contract carrier*, transporting *refractory cement*, from Chicago, IL, to points in MN, ND, SD and WI, under a continuing contract(s) with Plibrico Sales & Service Co. of Minneapolis, MN. (Hearing site: Minneapolis, MN.)

MC 129032 (Sub-126F), filed May 15, 1980. Applicant: TOM INMAN TRUCKING, INC., 5656 South 129th East Ave., Tulsa, OK 74145. Representative: John Fischer, 256 Montgomery Street, Fifth Floor, San Francisco, CA 94104. Transporting *pump and pump parts* (except in bulk), from the facilities of Daniel Industries, Inc., Ruth-Berry Pump Division at Houston, TX, to points in AZ CA, GA, IL, IN, MI, MO, NC, OH, OK, OR, SC, TN, VA, WA, and WI. (Hearing site: Dallas, TX.)

MC 135803 (Sub-18F), filed May 7, 1980. Applicant: WALLACE TRANSPORT, 9290 E. Hwy 140, P.O. Box 67, Planada, CA 95365. Representative: Donald M. Fennel (same address as applicant). Transporting (1) *thread, needles, yarns, yarn goods and notions*, and (2) *such commodities* as are sold by distributors of the commodities in (1) above, between the facilities of Coats &

Clark's Sales Corp., at or near Sparks, NV, and points in CA, OR and WA. (Hearing site: San Francisco, CA.)

MC 139442 (Sub-4F), filed May 12, 1980. Applicant: ALPHA CARGO MOTOR EXPRESS, INC., 2821 West 7th St., P.O. Box 425, Fort Worth, TX 76101. Representative: A. William Brackett, 1108 Continental Life Building, Fort Worth, TX 76102. Contract carrier transporting (1)(a) *brick, fire brick, and hollow building title,* and (b) *such commodities* as are used in the installation of the commodities in (1)(a) above, and (2) *concrete products,* between points in AR, KS, LA, MS, MO, OK, TN, TX, and NM, under continuing contract(s) with Acme Brick Company, a Division, of Justin Industries, Inc., of Forth Worth, TX. (Hearing site: Fort Worth or Dallas, TX.)

MC 139982 (Sub-4F), filed May 19, 1980. Applicant: WILLIAMSON DELIVERY SERVICES, INC., Box 22032 AMF, Tampa, FL 33622. Representative: Travis W. Williamson (same address as applicant). Transporting *general commodities* (except those of unusual value, classes A and B explosives, household goods as defined by the Commission, commodities in bulk, and those requiring special equipment), between Tampa International Airport, at or near Tampa, FL, on the one hand, and, on the other, points in Collier County, FL, restricted to traffic having an immediately prior or subsequent movement by air. (Hearing site: Tampa, FL.)

MC 139982 (Sub-5F), filed May 19, 1980. Applicant: WILLIAMSON DELIVERY SERVICES, INC., Box 22032 AMF, Tampa, FL 33622. Representative: Travis W. Williamson (same address as applicant). Transporting *general commodities* (except those of unusual value, classes A and B explosives, household goods as defined by the Commission, commodities in bulk, and those requiring special equipment), between Orlando Jetport, at or near Orlando, FL, on the one hand, and, on the other, points in Indian River County, FL, restricted to traffic having an immediately prior or subsequent movement by air. (Hearing site: Orlando, FL.)

MC 140132 (Sub-2F), filed May 14, 1980. Applicant: GREEN LINE TRUCKING, INC., Grenora, ND 58845. Representative: Fred E. Whisenand, 113 East Broadway, P.O. Box 1307, Williston, ND 58801. *Contract carrier* Transporting (1) *farm machinery and farm equipment,* and (2) *parts and accessories* for commodities in (1) above, between points in IL, IA, MN, WI, ID, WA, CO, NE, SD, ND, MT, and WY, and (2) between ports of entry on the international boundary line between U.S. and Canada, located in ND and MT, on the one hand, and, on the other, points in Sheridan and Hill Counties, MT, and Divide and Williams Counties, ND, under a continuing contract(s) with Petersen's Havre Implement Co., of Havre, MT, and Crosby Implement Co., Grenora Implement Co, and Plentywood Power Equipment Co., all of Grenora, ND. (Hearing site: Williston, ND or Glasgow, MT.)

MC 141453 (Sub-1F), filed May 8, 1980. Applicant: AUBRY TRANSPORTATION, INC., P.O. Box 216, Yorkshire, NY 14173. Representative: William J. Hirsch, Suite 1125, 43 Court St., Buffalo, NY 14202. Transporting (1) *metal castings and articles used in the manufacture of metal castings,* between points in NJ, NY, and PA; (2) *coke,* from Buffalo, NY to points in PA and NJ; (3) *pig iron* from Buffalo, NY to points in NJ, PA and MD, and (4) *sand,* in bulk, in dump vehicles, from points in NJ to points in PA. (Hearing site: Buffalo, NY.)

Note.—Dual operations may be involved.

MC 142672 (Sub-131F), filed April 28, 1980. Applicant: DAVID BENEUX PRODUCE & TRUCKING, INC., P.O. Drawer F, Mulberry, AR 72947. Representative: Don Garrison, Esq., P.O. Box 1065, Fayetteville, AR 72701. Transporting (1) *malt beverages,* and (2) *empty used beverage containers, and materials and supplies* used in and dealt with by breweries, from points in Jefferson County, CO, on the one hand, and, on the other, points in AR. (Hearing site: Denver, CO, or Fayetteville, AR.)

MC 142672 (Sub-133F), filed April 29, 1980. Applicant: DAVID BENEUX PRODUCE & TRUCKING, INC., P.O. Drawer F, Mulberry, AR 72947. Representative: Don Garrison, Esq., P.O. Box 1065, Fayetteville, AR 72701. Transporting (1) *gas furnaces, gas broilers, coal and woodburning fireplaces,* and (2) *materials, equipment and supplies* used in the manufacture, sale and distribution of the commodities in (1) above, between the facilities of Tem Tex Products, Inc., at or near Nashville, TN, on the one hand, and, on the other, points in IL, IN, MA, MI, NJ, NY, OH, OK, TX and WI. (Hearing site: Nashville, TN or Ft. Smith, AR.)

MC 142672 (Sub-134F), filed April 29, 1980. Applicant: DAVID BENEUX PRODUCE & TRUCKING, INC., P.O. Drawer F, Mulberry, AR 72947. Representative: Don Garrison, Esq., P.O. Box 1065, Fayetteville, AR 72701. Transporting (1) *BX broilers, cookers, roasters (outdoor BBQ type),* and (2) *materials, equipment and supplies used in the manufacture and distribution of the commodities in (1) above,* between the facilities of Arkla Industries, Inc., at or near Paragould, AR, on the one hand, and, on the other, points in the U.S. (except AK and HI). (Hearing site: Little Rock, AR or Ft. Smith, AR.)

MC 142672 (Sub-135F), filed April 28, 1980. Applicant: DAVID BENEUX PRODUCE & TRUCKING, INC., P.O. Drawer F, Mulberry, AR 72947. Representative: Don Garrison, Esq., P.O. Box 1065, Fayetteville, AR 72701. Transporting *baked goods,* from the facilities of Wortz Baking Company, at or near Ft. Smith, AR, to points in CA. (Hearing site: Ft. Smith, AR.)

MC 142672 (Sub-136F), filed May 1, 1980. Applicant: DAVID BENEUX PRODUCE & TRUCKING, INC., P.O. Drawer F, Mulberry, AR 72947. Representative: Don Garrison, Esq., P.O. Box 1065, Fayetteville, AR 72947. Transporting *radio and TV sets; phono operated and sound mechanisms: stands and tables, loudspeakers, dynamic, console type games and tapes,* from Greeneville and Jefferson City, TN, to points in AR, OK and TX. (Hearing site: Memphis, TN or Ft. Smith, AR.)

MC 144222 (Sub-12F), filed May 22, 1980. Applicant: RONALD HACKENBERGER, d.b.a. RON'S TRUCKING SERVICE, Rt. 3, Norwalk, OH 44857. Representative: Richard H. Brandon, 220 W. Bridge St., P.O. Box 97, Dublin, OH 43017. Transporting (1) *Sand,* in bulk, from Millwood and Glass Rock, OH to Lexington, KY and (2) *Lime and Limestone Products,* in bulk, from Huron, OH to points in MI, IN, and IL. (Hearing site: Columbus, OH.)

MC 144592 (Sub-7F), filed May 5, 1980. Applicant: WAYDEN'S HEAVY HAULERS, INC., 251-Fifth Avenue, Hiawatha, IA 52233. Representative: James M. Hodge, 1980 Financial Center, Des Moines, IA 50309. *Contract carrier,* transporting *construction equipment* from points in IL, MN, OH, OK, and WI to Milan, IL and points in IA, under continuing contract(s) with Herman M. Brown Company, of Cedar Rapids, IA. (Hearing site: Cedar Rapids, IA; Chicago, IL.)

MC 144612 (Sub-4F), filed May 6, 1980. Applicant: T. G. WEBB CO., P.O. Box 414, Wingate, NC 28174. Representative: W. G. Reese, III, P.O. Box 3004, Charlotte, NC 20203. *Contract carrier,* transporting *soybean meal,* from the facilities of (a) Producers Cooperative Feed Mill Inc., at or near Kershaw and Cameron, SC and (b) Hartsville Oil Mill, at Hartsville, SC, to Producers Cooperative Feed Mill, Inc., at Monroe, NC. (Hearing site: Charlotte or Raleigh, NC.)

MC 144953 (Sub-8F), filed May 9, 1980. Applicant: MULLEN TRUCKING LTD., 6204-A Burbank Road, S.E., Calgary, Alberta, Canada T2H 2C2. Representative: John T. Wirth, 717 17th Street, Suite 2600, Denver, CO 80202. Transporting: *Roofing materials and fiberboard sheating,* from the ports of entry on the International Boundary Line between the U.S. and Canada located in ID, WA and MT, to points in ID, MT, OR, WA and CA, restricted to traffic moving in foreign commerce. (Hearing site: Denver, CO.)

MC 145152 (Sub-192F), filed May 5, 1980. Applicant: BIG THREE TRANSPORTATION, INC., Post Office Box 706, Springdale, AR 72764. Representative: Don Garrison, Esq., Post Office Box 1065, Fayetteville, AR 72701. Transporting *foodstuffs* (except in bulk), from Weslaco, TX to points in AL, AR, AZ, CA, CO, IA, ID, IL, IN, KS, KY, LA, MI, MN, MO, MS, MT, ND, NE, NM, NV, OH, OK, OR, SD, TN, UT, WA, WI and WY, restricted to traffic originating at the facilities of Texsun Corporation, at or near Weslaco, TX. (Hearing site: San Antonio, TX or Fayetteville, AR.)

MC 145152 (Sub-193F), filed May 2, 1980. Applicant: BIG THREE TRANSPORTATION, INC., Post Office Box 706, Springdale, AR 72764. Representative: Don Garrison, Esq., Post Office Box 1065, Fayetteville, AR 72701. Transporting: (1) *frozen citrus and frozen citrus concentrates,* and (2) *frozen berries, fruits and vegetables, when moving in mixed shipments with the commodities named in (1) above*— from Monte Alto, TX, to points in AL, FL, GA, KY, MD, NC, NJ, NY, PA, SC, TN and VA, restricted to traffic originating at the facilities of Monte Alto Foods, Inc., at or near Monte Alto, TX. (Hearing site: San Antonio, TX or Fayetteville, AR.)

MC 145152 (Sub-194F), filed May 5, 1980. Applicant: BIG THREE TRANSPORTATION, INC., Post Office Box 706, Springdale, AR 72764. Representative: Don Garrison, Esq., Post Office Box 1065, Fayetteville, AR 72701. Transporting (1) *empty plastic and tin containers* (a) from the facilities of or used by C. L. Smith Company, at or near Piedmont and St. Louis, MO, to points in MN; and (b) from points in NJ, NY, OK, TN and WI, to the facilities of C. L. Smith Company, at or near St. Louis, MO, and (2) *corrugated cartons, epoxy adhesives, steel drums, steel pails, caps and closures and porcelain and brick grinding balls,* between points in the U.S. (except AK and HI), restricted to traffic originating at or destined to the facilities of C. L. Smith Company. (Hearing site: St. Louis, MO or Fayetteville, AR.)

MC 145213 (Sub-1F) (correction), filed January 29, 1979, published in the Federal Register, issue of April 17, 1980, and republished, as corrected, this issue. Applicant: DEEP SOUTH TRUCKING, INC., Hwy 11 North, P.O. Box 304, Purvis, MS 39475. Representative: Kent F. Hudson, 202 Main Street, P.O. Box 69, Purvis, MS 39475. *Contract carrier,* transporting *lumber, sawdust and wood chips* (1) between the facilities of Purvis Hardwood Lumber Co., Inc., at Purvis, MS, on the one hand, and, on the other, the retail yards of Purvis Hardwood Lumber Co., Inc., and Purvis Plywood & Lumber Co., Inc., at Slidell, LA, and (2) between the facilities of Purvis Hardwood Lumber Co., Inc., and Purvis Plywood & Lumber Co., Inc., at Purvis, MS, on the one hand, and, on the other, points in MA, LA, TX, OK, KS, NE, IA, MN, WI, IL, MO, AR, TN, KY, IN, MI, OH, VA, WV, GA, PA, FL, AL, NC, SC, NM, AZ, and CA, under a continuing contract(s) with Purvis Hardwood Lumber Co., Inc., and Purvis Plywood & Lumber Co., Inc., of Purvis, MS. (Hearing site: Hattiesburg or Biloxi, MS.)

Note.—The purpose of this republication is to correct the territorial description.

MC 146602 (Sub-5F), filed May 2, 1980. Applicant: ODEAN DUANE BAKKEN, d.b.a. BAKKEN TRUCK LINE, Highway 65 North, Northwood, IA 50459. Representative: Carl E. Munson, 469 Fischer Building, Dubuque, IA 52001. Transporting *Plastic Articles,* (1) From Minneapolis, MN to Northwood, IA; and (2) From Northwood, IA, to Rock Island, IL. (Hearing site: Minneapolis, MN or Madison, WI.)

MC 147572 (Sub-2F), filed May 5, 1980. Applicant: COUNTRY LEASING, INC., 8206 Park Avenue, Allen Park, MI 48101. Representative: Alex J. Miller, P.O. Box 244, Bloomfield Hills, MI 48013. *Contract carrier,* transporting *cake, donut, frosting and prepared mixes and ingredients,* between Wright City, MO, Battle Creek, Detroit and Monroe, MI, Chicago, Decatur and Batavia, IL, and Burlington, IA, under continuing contract(s) with Amendt Milling Company of Monroe, MI. (Hearing site: Detroit, MI or Chicago, IL.)

MC 148342 (Sub-2F), filed May 5, 1980. Applicant: J AND J MOTOR FREIGHT, INC., 1729 Hadley, St. Louis, MO 63106. Representative: Ernest A. Brooks II, 1301 Ambassador Bldg., St. Louis, MO 63101. *Contract carrier,* transporting (1) *Candy,* from the facilities of Switzer Candy Co., a Division of Beatrice Foods Co., at St. Louis, MO, to points in the U.S. (except AK and HI); and, (2) *materials and supplies* used in the manufacture and distribution of candy (except in bulk) in the reverse direction, under a continuing contract(s), with Switzer Candy Co., a Division of Beatrice Foods Co., of St. Louis, MO. (Hearing site: St. Louis, MO.)

MC 148342 (Sub-3F), filed May 5, 1980. Applicant: J AND J MOTOR FREIGHT, INC., 1729 Hadley, St. Louis, MO 63106. Representative: Ernest A. Brooks II, 1301 Ambassador Bldg., St. Louis, MO 63101. *Contract carrier,* transporting *Meats,* from St. Louis, MO and National City, IL, to points in OH, MA, RI, CT, NY, PA, DE, MD, WV, IL, TN, FL, and DC, under continuing contract(s), with Royal Packing Company, Inc. of St. Louis, MO. (Hearing site: St. Louis, MO.)

MC 148462 (Sub-2F), filed May 1, 1980. Applicant: ABLE TRUCKING, INC., P.O. Box 92, Jeffersonville, IN 47130. Representative: John M. Nader, 1600 Citizens Plaza, Louisville, KY 40202. Transporting: *Foodstuffs,* (except frozen or in bulk), from the facilities of Snack Foods, Inc., at Jeffersonville, IN, to points in the US (except AK and HI), restricted to traffic originating at named facilities. (Hearing site: Louisville, KY.)

MC 149133 (Sub-2F), filed May 12, 1980. Applicant: DIST/TRANS MULTI-SERVICES, INC., d.b.a. TAHWHEELALEN EXPRESS, INC., 1333 Nevada Boulevard, P.O. Box 7191, Charlotte, NC 28217. Representative: Wyatt E. Smith (same address as applicant). Transporting *general commodities* (except classes A and B explosives, household goods as defined by the Commission, commodities in bulk, or in tank vehicles), between the facilities of Dist/Trans Multi-Services, Inc., at Dalton, GA, Charlotte and Greensboro, NC, and Richmond, VA, on the one hand, and, on the other, points in NC, SC, GA, TN, and VA, restricted to traffic originating at or destined to the named facilities. (Hearing site: Charlotte, NC.)

Note.—Dual operations may be involved.

MC 149202 (Sub-2F), filed May 12, 1980. Applicant: MOUNTAIN TRUCKING, INC., 1114 E. 5th Street, Oxnard, CA 93030. Representative: Milton W. Flack, 8383 Wilshire Blvd., Suite 900, Beverly Hills, CA 90211. Transporting *general commodities* (except those of unusual value, classes A and B explosives, household goods as defined by the Commission, commodities in bulk, and those requiring special equipment) between Los Angeles, CA, Las Vegas, NV and Salt Lake City, UT, restricted to traffic having a prior or subsequent movement by air. (Hearing site: Los Angeles, CA.)

MC 149353 (Sub-1F), filed May 12, 1980. Applicant: D. D. H., INC., P.O. Box

459, Middleburg, FL 32068. Representative: Sol H. Proctor, 1101 Blackstone Bldg., Jacksonville, FL 32202. Transporting: *Road Building and Construction Aggregates*, in bulk, between points in FL and GA. (Hearing site: Jacksonville, FL.)

MC 150103 (Sub-5F), filed May 12, 1980. Applicant: SCHWEIGER INDUSTRIES, INC., 116 West Washington St., Jefferson, WI 53549. Representative: Michael J. Wyngaard, 150 East Gilman St., Madison, WI 53703. *Contract carrier*, transporting *cotton fabric and cotton piece goods*, from points in NJ, GA, TN, NC, MS, SC, and MA, to Chicago, IL, under a continuing contract(s) with Loomcraft Textile Supply Co., Inc. of Chicago, IL. (Hearing site: Madison, WI, or Chicago, IL.)

MC 150173 (Sub-1F), filed May 9, 1980. Applicant: HAMILTON DISTRIBUTING, INC., 345 W. Meats Avenue, Orange, CA 92665. Representative: Floyd L. Farano, 2555 E. Chapman Ave., Suite 415, Fullerton, CA 92613. *Contract carrier*, Transporting (1) *wall texturing compound*, from points in Orange County, CA to points in AZ, CO, ID, KS, MT, NM, NV, OR, UT, WA, and WY; (2) *clay* from points in NV and WY to points in Los Angeles and Orange Counties, CA; (3) *Mica* from points in NM to points in Orange and Los Angeles Counties, CA, and (4) *lumber* from points in ID, MT, and NV to points in CA, under continuing contract(s) with Hamilton Materials, Inc., of Orange, CA. (Hearing site: Los Angeles, CA.)

Agatha L. Mergenovich,
Secretary.

[FR Doc. 80-19816 Filed 7-2-80; 8:45 am]
BILLING CODE 7035-01-M

[Ex Parte No. 380]

Status of Carrier-Affiliated Shippers' Agents

AGENCY: Interstate Commerce Commission.

ACTION: Notice of declaratory order proceeding.

SUMMARY: A declaratory order proceeding is being instituted to determine the lawfulness of a railroad's establishing a subsidiary consolidation company to act as an exempt shipper's agent under 49 U.S.C. 10562(4). This proceeding formerly was numbered Docket No. 37356, and entitled Detroit, Toledo and Ironton Railroad Company—Petition For Declaratory Order—Lawfulness of Proposed Carrier Affiliated Shipper Agency. Because of the similarity of issues presented here and those raised in FF-C-75, Status of Forwarder-Affiliated Consolidators (notice published at 45 FR 6663, January 29, 1980), the proceedings will be consolidated. Finally, at the suggestion of several parties commenting in FF-C-75, this proceeding will include consideration of the lawfulness of a regulated motor carrier's establishing a subsidiary consolidation company to act as an exempt shipper's agent under 49 U.S.C. 10562(4).

DATES: Comments already received in FF-C-75, Status of Forwarder-Affiliated Consolidators will be considered in this proceeding. Parties commenting in the FF-C-75 proceeding are invited to file additional comments if they so desire. Comments should be filed on or before August 18, 1980.

ADDRESSES: Send an original and 15 copies, if possible, of any comments to: Ex Parte No. 380, Room 5416, Office of Proceedings, Interstate Commerce Commission, Washington, D.C. 20423.

Send one copy of comments to each of petitioners' representatives:

M. J. Barron, Vice President—Marketing, Detroit, Toledo & Ironton Railroad Co., One Parkland Boulevard, Dearborn, MI 48126.

Lawrence Berman, 747 Third Avenue, New York, NY 10017.

S. S. Eisen, 370 Lexington Avenue, New York, NY 10017.

FOR FURTHER INFORMATION CONTACT: Mark S. Shaffer, (202) 275-7531

or

Donald J. Shaw, Jr., (202) 275-7292.

SUPPLEMENTARY INFORMATION: Detroit, Toledo & Ironton Railroad Company (DT&I) has requested us to institute a declaratory order proceeding. Transportation Rail Services, Inc. (TRS), has filed a petition for leave to intervene.

The particular controversy involves the question of whether a common carrier by rail may establish a subsidiary company to act in the capacity of a shipper's agent for consolidating cars, and whether such agents are exempt from Commission regulation pursuant to 49 U.S.C. 10562(4).

DT&I proposes to establish a subsidiary called "Consolidator" located in Atlanta, GA, which would consolidate shipments for compensation. Consolidator would accept single trailerloads of goods intended for rail TOFC movement to destinations in and beyond the north-central portion of the United States. Accepting trailerloads as single units, Consolidator would consolidate them with trailers of other shippers and thus gain the benefit of two-trailer rail rates.

The proposal to establish a subsidiary for consolidation of freight is intended to meet the competition of Intermodal Transportation Co., a motor common carrier which maintains a consolidating subsidiary called U.S. Consolidators, at Atlanta. DT&I notes that traffic originated by U.S. Consolidators moves at single-factor rail TOFC rates from Atlanta to Cincinnati, OH, and single-factor motor carrier rates beyond Cincinnati. Under DT&I's proposal, traffic originated by Consolidator would move at single-factor rail rates from Atlanta to Cincinnati, and then over DT&I's lines to a terminus in Brownstown, MI.

TRS, an exempt shipper's agent, opposes DT&I's proposal, because it believes that a railroad-controlled agent will act in the best interest of the carrier rather than the best interest of the shipper. Thus it fears that the routing would be over the lines of the owner's railroad, even if it results in poor service for the shipper. It claims the proposal is potentially discriminatory against both nonaffiliated shippers' agents and connecting carriers.

We cannot determine the narrow issue presented by petitioner without deciding the broader question of the lawfulness of these arrangements for rail carriers generally. Consequently, we will broaden the scope of the proceeding accordingly.

The Commission by a notice served January 25, 1980, instituted a declaratory order proceeding in FF-C-75, Status of Forwarder Affiliated Consolidators, to determine the lawfulness of regulated freight forwarders' performing such services through an independent affiliate free from regulation under section 10562(4). Because of the similarity of the issues, we will consolidate these two proceedings for disposition in a single decision. For a detailed explanation of FF-C-75, see the notice published in the Federal Register at 45 FR 6663 (January 29, 1980). Comments were received in that proceeding by March 14, 1980. Those comments will be considered in the instant proceeding. Parties commenting in FF-C-75 are invited to submit additional comments if they so desire.

Some parties commenting in FF-C-75 request that our consideration be enlarged to consider the lawfulness of regulated motor carriers' performing exempt services under section 10562(4) through corporate affiliates. Because the instant petition is based in part on improving rail carriers' ability to compete with motor carriers who now perform such services, we will expand Ex Parte No. 380 to consider the status of motor carrier affiliated consolidators.

Issues which may be addressed in this proceeding include:

(1) Whether regulated rail carriers, motor carriers, and freight forwarders may lawfully establish subsidiary consolidation companies to perform exempt consolidation services under 49 U.S.C. 10562(4).

(2) Whether such operations are potentially discriminatory against nonaffiliated shipper's agents, connecting carriers, or shippers using such services.

(3) Whether regulated transportation companies without such affiliations effectively would be precluded from competing for traffic handled by exempt shipper agents.

(4) Whether regulated transportation companies can effectively compete for the involved traffic by adjusting rates in their published tariffs.

(5) Whether regulated transportation companies without such arrangements can provide similar services under existing regulations.

Petitioners state that the requested rulings will have no effect of any kind on the quality of the human environment. The former Bureau of Investigations and Enforcement, now part of the Office of Consumer Protection, has expressed an interest in the described types of operation and is involved in enforcement actions concerning similar operations. Accordingly, the Office of Consumer Protection will be made a party of record in this proceeding.

No oral hearing is contemplated. Any person desiring to participate in this proceeding shall file an original and fifteen (15) copies (wherever possible) of written representations, views, or arguments. A copy of each representation shall be served on petitioners' representatives.

Written material or suggestions submitted will be available for public inspection at the Office of the Interstate Commerce Commission, 12th Street and Constitution Ave., Washington, D.C., during regular business hours.

It is ordered:

Pursuant to 5 U.S.C. 554(e) and in the sound exercise of the Commission's discretion, a declaratory order proceeding is instituted.

A copy of this order shall be served on the Commission's Office of Consumer Protection, which is made a party to the proceeding.

Decided: June 24, 1980.

By the Commission, Chairman Gaskins, Vice Chairman Gresham, Commissioners Stafford, Clapp, Trantum, Alexis, and Gilliam. Commissioner Stafford concurring.

Agatha L. Mergenovich,

Secretary.

[FR Doc. 80-19978 Filed 7-2-80; 8:45 am]

BILLING CODE 7035-01-M

Transportation of Used Household Goods in Connection With a Pack-and-Crate Operation on Behalf of the Department of Defense; Special Certificate Letter Notice(s)

The following letter notices request participation in a Special Certificate of Public Convenience and Necessity for the transportation of used household goods, for the account of the United States Government, incident to the performance of a pack-and-crate service on behalf of the Department of Defense under the Direct Procurement Method or the Through Government Bill of Lading Method under the Commission's regulations (49 CFR 1056.40) promulgated in "Pack-and-Crate" operations in Ex Parte No. MC-115, 131 M.C.C. 20 (1978).

An original and one copy of verified statement in opposition (limited to argument and evidence concerning applicant's fitness) may be filed with the Interstate Commerce Commission *within 20 days* from the date of this publication. A copy must also be served upon applicant or its representative. Opposition to the applicant's participation will not operate to stay commencement of the proposed operation.

If applicant is not otherwise informed by the Commission, operations may commence *within 30 days* of the date of its notice in the Federal Register, subject to its tariff publication effective date.

HG-28-79 (Amendment)(Special Certificate—used Household Goods) filed June 23, 1980. Applicant: DON R. EMERSON, d.b.a. EMERSON MOVING AND STORAGE, 615 South "E" Street, Fort Smith, AR 72901. Representative: Troy R. Douglas, 15 Court Street, Fort Smith, AR 72901. Authority sought: Between points in Atoka, Bryan, Choctaw, Coal, Creek, Haskell, Hughes, Johnson, Latimer, Marshall, McIntosh, Muskogee, Okfuskee, Okmulgee, Pittsburgh, Pontotoc, Pushmataha, Seminole, Tulsa and Wagoner Counties, OK, serving McAlister Army Ammunition Plant, at McAlister, OK.

By the Commission.

Agatha L. Mergenovich,

Secretary.

[FR Doc. 80-19977 Filed 7-2-80; 8:45 am]

BILLING CODE 7035-01-M

Transportation of Government Traffic; Special Certificate Letter Notice(s)

The following letter notices request participation in a Special Certificate of Public Convenience and Necessity for the transportation of general commodities, (except classes A and B explosives, radioactive materials, etiologic agents, shipments of secret materials, and weapons and ammunition which are designated sensitive by the United States Government), between points in the United States (including Alaska and Hawaii), restricted to the transportation of traffic handled for the United States Government or on behalf of the United States Government where the government contractor (consignee or cosignor), is directly reimbursed by the government for the transportation costs, under the Commission's regulations (49 CFR 1062.4), pursuant to a general finding made in Ex Parte No. MC-107, *Government Traffic*, 131 M.C.C. 845 (1979).

An original and one copy of verified statement in opposition (limited to argument and evidence concerning applicant's fitness) may be filed with the Interstate Commerce Commission *within 20 days* from the date of this publication. A copy must also be served upon applicant or its representative.

If applicant is not otherwise informed by the Commission *within 30 days* of the date of its notice in the Federal Register, operations may commence subject to its tariff publication's effective date, or the filing of an effective tender pursuant to 49 U.S.C. 10721.

GT-847-80 (special certificate—Government traffic), filed May 5, 1980. Applicant: BRISTOW TRUCKING CO., INC., 750 Clow Road, Birmingham, AL 35217. Representative: John R. Frawley, Jr., 5506 Crestwood Blvd., Birmingham, AL 35212. Government Agency involved: General Services Administration, Departments of Defense, Agriculture; Veterans Administration, Bureau of Indian Affairs, Internal Revenue Service.

GT-848-80 (special certificate—Government traffic), filed June 16, 1980. Applicant: BLUE RIBBON TRUCKING, INC., 167 Fairfield Road—P.O. Box 1409, Fairfield, NJ 07006. Representative: Michael R. Werner, Esquire (address same as applicant). Government Agency involved: Departments of Defense, Agriculture, Energy, and Interior; General Services Administration, National Aeronautics and Space Administration, U.S. Government Printing Office, Veterans Administration, Internal Revenue Service and Health Education and Welfare.

GT-849-80 (special certificate—Government traffic), filed June 5, 1980. Applicant: CAPITOL TRANSPORTATION, INC., P.O. Box 3008 G.P.O., San Juan, PR 00936. Representative: Robert J. Gallagher, Esquire, 1000 Connecticut Avenue, N.W., Washington, DC 20036. Government Agency involved: Departments of Defense, Transportation; and General Services Administration.

GT-850-80 (special certificate—Government traffic), filed May 12, 1980. Applicant: Y. HIGA ENTERPRISES, LTD., 1460 Park Avenue, Emeryville, CA 94608. Representative: Rodney M. Nishida (address same as applicant). Government Agency involved: Department of Defense and U.S. Coast Guard.

GT-851-80 (special certificate—Government traffic), filed June 10, 1980. Applicant: THE LAKE SHORE MOTOR FREIGHT COMPANY, INC., 1200 South State Street, Girard, OH 44420. Representative: Michael R. Werner, Esquire, P.O. Box 1409—167 Fairfield Road, Fairfield, NJ 07006. Government Agency involved: Departments of Defense, Agriculture, Energy, and Interior; General Services Administration, National Aeronautics and Space Administration, U.S. Government Printing Office, Veterans Administration, Internal Revenue Service and Department of Health Education and Welfare.

GT-852-80 (special certificate—Government traffic), filed June 11, 1980. Applicant: C. & R. TRUCKING LTD., 2955 Packers Avenue, Madison, WI 53704. Representative: Curtis Jahn (same address as applicant). Government Agency involved: General Services Administration.

GT-853-80 (special certificate—Government traffic), filed March 31, 1980. Applicant: COMMERCIAL TRANSFER SYSTEMS, INC., Fullerton Industrial Park, P.O. Box 806, Springfield, VA 22150. Representative: Blair P. Wakefield, Attorney-at-Law, Suite 1001 First and Merchants, National Bank Building, Norfolk, VA 23510. Government Agency involved: Agencies listed in U.S. Government Manual (1979-80 edition).

GT-854-80 (special certificate—Government traffic), filed May 6, 1980. Applicant: ARMSTRONG MOVING & STORAGE, INC., P.O. Box 1464, Lubbock, TX 79408. Representative: Richard Hubbert, P.O. Box 10236, Lubbock, TX 79408. Government Agency involved: Department of Defense and General Services Administration.

GT-855-80 (special certificate—Government traffic), filed March 25, 1980. Applicant: COLANDREA TRUCKING, INC., 526 Route 9W, Newburgh, NY 12550. Representative: Ronald Colandrea (address same as applicant). Government Agency involved: Department of Defense, Bon Ton Foods (a Government contractor), and Department of Agriculture.

GT-856-80 (special certificate—Government traffic), filed May 24, 1980. Applicant: N. K. ALBERTSON, 1601 Bluff Road, Montebello, CA 90640. Representative: (same address as above). Government Agency involved: Agencies listed in U.S. Government Manual (1979-80 edition).

GT-857-80 (special certificate—Government traffic), filed May 24, 1980. Applicant: ARIES TRANSPORTATION COMPANY, 13932 Valley Boulevard, City of Industry, CA 91744. Representative: Ken Fenstermacher (same address as applicant). Government Agency involved: Agencies listed in U.S. Government Manual (1979-80 edition).

GT-858-80 (special certificate—Government traffic), filed May 12, 1980. Applicant: ANNCO TRANSPORT & TRUCKING COMPANY, 836 Brazil Avenue, San Francisco, CA 94112. Representative: Loron J. Bradford (owner) (same address as applicant). Government Agency involved: Department of Defense, and General Services Administration.

GT-859-80 (special certificate—Government traffic), filed May 2, 1980. Applicant: A & W CARTAGE, P.O. Box 100, 237 E. 115th Street, Chicago, IL 60628. Representative: John L. Tiger, General Manager (address same as applicant). Government Agency involved: General Services Administration, and Department of Defense.

GT-860-80 (special certificate—Government traffic), filed May 23, 1980. Applicant: BALTIMORE INTERNATIONAL TRANSPORT, INC., 503 E. Patapsco Avenue, Baltimore, MD 21225. Representative: Robert J. Gallagher, Esquire, 1000 Connecticut Avenue, N.W., Washington, DC 20036. Government Agency involved: Department of Defense, Department of Transportation, and General Services Administration.

GT-861-80 (special certificate—Government traffic), filed June 2, 1980. Applicant: BOSS INDUSTRIES, INC., P.O. Box 75147, Oklahoma City, OK 73107. Representative: Robert J. Gallagher, Esquire, 1000 Connecticut Ave., N.W., Washington, DC 20036. Government Agency involved: Department of Defense, Department of Transportation, and General Services Administration.

GT-862-80 (special certificate—Government traffic), filed May 24, 1980. Applicant: CORONA TRUCKING, INC., 11720 S. Greenstone, Santa Fe Springs, CA 90670. Representative: Paul V. Mitchell (address same as applicant). Government Agency involved: Agencies listed in U.S. Government Manual (1979-80 edition).

GT-863-80 (special certificate—Government traffic), filed May 24, 1980. Applicant: CUZ TRANSPORTATION, INC., 1601 Bluff Road, Montebello, CA 90640. Representative: Arlene Cabral (address same as applicant). Government Agency involved: Agencies listed in U.S. Government Manual (1979-80 edition).

GT-864-80 (special certificate—Government traffic), filed April 9, 1980. Applicant: D.D.H., INC., P.O. Box 459, Middleburg, FL 32068. Representative: Sol H. Proctor, 1101 Blackstone Bldg., Jacksonville, FL 32202. Government Agency involved: Agencies listed in U.S. Government Manual (1979-80 edition).

GT-865-80 (special certificate—Government traffic), filed May 5, 1980. Applicant: A.T.F. TRUCKING CO., INC., Route 11, Box 507-B, Birmingham, AL 35210. Representative: John R. Frawley, Jr., Attorney-at-Law, 5506 Crestwood Blvd., Birmingham, AL 35212. Government Agency involved: General Services Administration, Bureau of Reclamation and Mines, U.S. Surplus Property Office, Department of Defense.

GT-866-80 (special certificate—Government traffic), filed June 23, 1980. Applicant: CLARK TANK LINES COMPANY, 11450 North Beck Street, Salt Lake City, UT 84110. Representative: William S. Richards, P.O. Box 2465, Salt Lake City, UT 84110. Government Agency involved: Agencies listed in U.S. Government Manual (1979-80 edition).

GT-867-80 (special certificate—Government traffic), filed June 24, 1980. Applicant: EDDIE JONES TRUCKING COMPANY (EJTC), 960 7th Street, Richmond, CA 94801. Representative: Eddie Jones (owner) (same address as applicant). Government Agency involved: Defense Department and General Services Administration.

GT-868-80 (special certificate—Government traffic), filed June 16, 1980. Applicant: H & C TRANSPORTATION SERVICES, P.O. Box 2043, Sandusky, OH 44870. Representative: Howard D. Harris Jr., President (same address as applicant). Government Agency

involved: Department of Defense and General Services Administration.

GT-869-80 (special certificate—Government traffic), filed April 24, 1980. Applicant: DERBY VAN & STORAGE COMPANY, INC., 3915 Oaklawn Drive, Louisville, KY 40219. Representative: James R. Hatfield (same address as applicant). Government Agency involved: Department of Defense, U.S. Coast Guard, and General Services Administration.

GT-870-80 (special certificate—Government traffic), filed June 10, 1980. Applicant: EDDIE EDWARDS TRUCKING CO. (a corporation), 3571 Clifton Avenue, Lorain, OH 44052. Representative: Brian S. Stern, Stern & Jones, 2425 Wilson Boulevard—Suite 367, Arlington, VA 22201. Government Agency involved: General Services Administration, Departments of Defense, Energy, Commerce, and Transportation.

GT-871-80 (special certificate—Government traffic), filed June 23, 1980. Applicant: M.S.B.P., INC., P.O. Box 8, Papillion, NE 68406. Representative: Scott T. Robertson, P.O. Box 81849, Lincoln, NE 68501. Government Agency involved: Agencies listed in U.S. Government Manual (1979-80 edition).

GT-872-80 (special certificate—Government traffic), filed June 23, 1980. Applicant: TRANSPORTATION UNLIMITED OF CALIFORNIA, INC., 2639 South Soto Street, Los Angeles, CA 90023. Representative: Scott T. Robertson, P.O. Box 81849, Lincoln, NE 68501. Government Agency involved: Agencies listed in U.S. Government Manual (1979-80 edition).

GT-873-80 (special certificate—Government traffic), filed June 23, 1980. Applicant: L. C. L. TRANSIT COMPANY, 949 Advance Street, P.O. Box 949, Green Bay, WI 54305. Representative: L. F. Abel (same address as applicant). Government Agency involved: Agencies listed in U.S. Government Manual (1979-80 edition).

GT-874-80 (special certificate—Government traffic), filed June 23, 1980. Applicant: SHO-LEN, INC., 10869 Drury Lane, Lynwood, CA 90262. Representative: Milton W. Flack, 8383 Wilshire Blvd., Suite 900, Beverly Hills, CA 90211. Government Agency involved: Agencies listed in U.S. Government Manual (1979-80 edition).

GT-875-80 (special certificate—Government traffic), filed June 23, 1980. Applicant: ARCTIC SLOPE ALASKA GENERAL CONSTRUCTION COMPANY, a partnership, d.b.a. ARCTIC SLOPE/ALASKA GENERAL, 536 East 48th Avenue, Anchorage, AK 99501. Government Agency involved: Agencies listed in U.S. Government Manual (1979-80 edition).

GT-876-80 (special certificate—Government traffic), filed June 23, 1980. Applicant: OVEROAD CONTAINER SERVICE, INC., 3980 Quebec Street, P.O. Box 7240, Denver, CO 80207. Representative: Rick Barker, General Traffic Manager (address same as applicant). Government Agency involved: Agencies listed in U.S. Government Manual (1979-80 edition).

GT-877-80 (special certificate—Government traffic), filed June 23, 1980. Applicant: TRANSCONTINENTAL RIGGING & LOADING CORPORATION, P.O. Box 162, Melrose Park, IL 60160. Representative: Donald W. Smith, P.O. Box 40248, Indianapolis, IN 46240. Government Agency involved: Agencies listed in U.S. Government Manual (1979-80 edition).

GT-878-80 (special certificate—Government traffic), filed June 23, 1980. Applicant: WESTERN LINES, INC., 3523 N. McCarty, P.O. Box 1145, Houston, TX 77001. Representative: John G. Banner, Esquire, 1601 Blue Rock Street, Cincinnati, OH 45223. Government Agency involved: Agencies listed in U.S. Government Manual (1979-80 edition).

GT-879-80 (special certificate—Government traffic), filed June 23, 1980. Applicant: F & S MOVING & STORAGE, INC., P.O. Box 1208 Mailing address: 250 E. Bayview Avenue, Biloxi, MS 39533. Representative: David Earl Tinker, 1000 Connecticut Ave., N.W., Suite 1200, Washington, DC 20036. Government Agency involved: Agencies listed in U.S. Government Manual (1979-80 edition).

GT-880-80 (special certificate—Government traffic), filed June 20, 1980. Applicant: MAIN LINE HAULING CO., INC., P.O. Box C, St. Clair, MO 63077. Representative: William H. Shawn, Esquire, 1730 M Street, N.W.—Suite 501, Washington, DC 20036. Government Agency involved: Department of Defense and General Services Administration.

GT-881-80 (special certificate—Government traffic), filed June 23, 1980. Applicant: THE COTTER MOVING & STORAGE CO., 265-273 West Bowery Street, Akron, OH 44308. Representative: Thomas R. Kinsley, attorney-at-law, 10614 Amherst Avenue, Silver Spring, MD 20902. Government Agency involved: Agencies listed in U.S. Government Manual (1979-80 edition).

GT-882-80 (special certificate—Government traffic), filed June 23, 1980. Applicant: ADMIRAL-MERCHANTS MOTOR FREIGHT, INC., 215 South 11th Street, Minneapolis, MN 55403. Representative: Robert P. Sack, P.O. Box 6010, West St. Paul, MN 55118. Government Agency involved: Department of Defense and Agriculutre; General Services Administration.

GT-883-80 (special certificate—Government traffic), filed June 23, 1980. Applicant: HOUFF TRANSFER, INCORPORATED, P.O. Box 91, Weyers Cave, VA 24486. Representative: Harold G. Hernly, Jr., 110 South Columbus Street, Alexandria, VA 22314. Government Agency involved: Agencies listed in U.S. Government Manual (1979-80 edition).

GT-884-80 (special certificate—Government traffic), filed June 23, 1980. Applicant: MERCHANTS DELIVERY SERVICE, INC., 221 Burleson Street, P.O. Box 999, San Antonio, TX 78294. Representative: Bob Vetters, President (address same as applicant). Government Agency involved: General Services Administration, Department of Defense.

GT-885-80 (special certificate—Government traffic), filed June 23, 1980. Applicant: DELCHER FORWARDING SERVICES, INC., 4219 Central Avenue, St. Petersburg, FL 33733. Representative: Barry Mosteller, President (address same as applicant). Government Agency involved: Department of Defense, General Services Administration, Veterans' Administration, and Coast Guard.

GT-886-80 (special certificate—Government traffic), filed June 19, 1980. Applicant: EALY BROS. TRUCKING COMPANY (EBTC), 10501 Englewood Drive, Oakland, CA 94605. Representative: Willie Ealy, owner (address same as applicant). Government Agency involved: Department of Defense, and General Services Administration.

GT-887-80 (special certificate—Government traffic), filed June 24, 1980. Applicant: H. E. BRINKERHOFF & SONS TRANSPORTATION COMPANY, INC., 1001 South 14th Street, Harrisburg, PA 17104. Representative: Thomas R. Kingsley, attorney-at-law, 10614 Amherst Avenue, Silver Spring, MD 20902. Government Agency involved: Agencies listed in U.S. Government Manual (1979-80 edition).

GT-888-80 (special certificate—Government traffic), filed June 23, 1980. Applicant: VANCE TRUCKING CO., INC., P.O. Box 1119, Henderson, NC 27536. Representative: Lawrence E. Lindeman, 425—13th Street, N.W., Washington, DC 20004. Government Agency involved: Departments of Defense, Commerce, Agriculture; General Accounting Office, General

Services Administration, Internal Revenue Service, U.S. Government Printing Office, and U.S. Postal Service.

GT-889-80 (special certificate—Government traffic), filed June 24, 1980. Applicant: CRESCENT INDUSTRIES, INC., P.O. Box 1237, Greenville, TX 75401. Representative: John Magill, V. President-General Manager (address same as applicant). Government Agency involved: Department of Defense.

GT-890-80 (special certificate—Government traffic), filed June 24, 1980. Applicant: LEWIS TRUCK LINES INC., P.O. Box 1494, Conway, SC 29526. Representative: Herbert Alan Dubin, Esquire, Baskin and Sears, 818 Connecticut Avenue, N.W., Washington, DC 20006. Government Agency involved: Department of Defense and General Services Administration.

GT-891-80 (special certificate—Government traffic), filed June 24, 1980. Applicant: SHAFFER TRUCKING, INC., P.O. Box 418, New Kingstown, PA 17072. Representative: N. L. Cummins (address same as applicant). Government Agency involved: Agencies listed in U.S. Government Manual (1970-80 edition).

GT-892-80 (special certificate—Government traffic), filed June 23, 1980. Applicant: K. J. TRANSPORTATION, INC., 6070 Collett Road, Victor, NY 14564. Representative: Linda A. Calvo (address same as applicant). Government Agency involved: Agencies listed in U.S. Government Manual (1979-80 edition).

GT-893-80 (special certificate—Government traffic), filed June 23, 1980. Applicant: CENTRAL STORAGE & TRANSFER CO. OF HARRISBURG, P.O. Box 2821, Harrisburg, PA 17105. Representative: Christian V. Graf, Esq., 407 N. Front Street, Harrisburg, PA 17101. Government Agency involved: Departments of Defense, Transportation, Energy, Agriculture, Interior, Health, Education & Welfare, Internal Revenue Service, General Services Administration, U.S. Government Printing Office and U.S. Postal Service.

GT-894-80 (special certificate—Government traffic), filed June 23, 1980. Applicant: CONTINENTAL CONTRACT CARRIER CORP., 15045 E. Salt Lake Ave., City of Industry, CA 91749. Representative: Richard A. Peterson, Peterson, Bowman & Johanns, P.O. Box 81849, Lincoln, NE 68501. Government Agency involved: Agencies listed in U.S. Government Manual (1979-80 edition).

GT-895-80 (special certificate—Government traffic), filed June 23, 1980. Applicant: CLAIRMONT TRANSFER CO., a Michigan corporation, 1803 7th Ave., North Escanaba, MI 49829. Representative: Elmer J. Wery, Vice President—Commerce, 2666 Gross Ave. (P.O. Box 3548), Green Bay, WI 54303. Government Agency involved: Agencies listed in U.S. Government Manual 1979-80 edition.

GT-896-80 (special certificate—Government traffic), filed June 23, 1980. Applicant: LOUIS P. COTE, INC., P.O. 117, 317 Blucher St., Manchester, NH 03105. Representative: James M. Burns, 1383 Main St., Suite 413, Springfield, MA 01103. Government Agency involved: Agencies listed in U.S. Government Manual (1979-80 edition).

GT-897-80 (special certificate—Government traffic), filed June 23, 1980. Applicant: GARDNER TRUCKING CO., INC., P.O. Drawer 493, Walterboro, SC 29488. Representative: Steven W. Gardner, Century Center—Suite 770, 1800 Century Blvd. N.E., Atlanta, GA 30345. Government Agency involved: General Services Administration, U.S. Government Printing Office.

GT-898-80 (special certificate—Government traffic), filed June 23, 1980. Applicant: R. W. JONES TRUCKING CO., P.O. Drawer T, Vernal, UT 84078. Representative: William S. Richards, P.O. Box 2465, Salt Lake City, UT 84110. Government Agency involved: Agencies listed in U.S. Government Manual (1979-80 edition).

GT-899-80 (special certificate—Government traffic), filed June 23, 1980. Applicant: FAGERHOLT-JACKSON, INCORPORATED, Hoople, ND 58243. Representative: William J. Gambucci, Suite M-20, 400 Marquette Ave., Minneapolis, MN 55402. Government Agency involved: Agencies listed in U.S. Government Manual (1979-80 edition).

GT-900-80 (special certificate—Government traffic), filed June 23, 1980. Applicant: ARLEN LINDQUIST, d.b.a. ARLEN E. LINDQUIST TRUCKING, 7192 Davenport St., N.E., Minneapolis, MN 55434. Representative: William J. Gambucci, Suite M-20, 400 Marquette Ave., Minneapolis, MN 55402.Government Agency involved: Agencies listed in U.S. Government Manual (1979-80 edition).

GT-901-80 (special certificate—Government traffic), filed June 24, 1980. Applicant: RAPID TRANSIT, INC., 7193 Milliken, Middletown, OH 45042. Representative: Stephen D. Strauss, Esq., 2613 Carew Tower, Cincinnati, OH 45202. Government agency involved: General Services Administration, Departments of Commerce and Defense.

GT-902-80 (special certificate—Government traffic), filed June 23, 1980. Applicant: MINUTE MAN TRANSIT, INC., P.O. Box 64, Needham, MA 02192. Representative: Frank J. Weiner, Esq., 15 Court Square, Boston, MA 02108. Government agency involved: Agencies listed in U.S. Government Manual (1979-80 edition).

GT-903-80 (special certificate—Government traffic), filed June 23, 1980. Applicant: CASAZZA TRUCKING COMPANY, 1250 Glendale Ave., Sparks, NV 89431. Representative: Earl Casazza (address same as applicant). Government agency involved: Department of Defense, Energy Research and Development Administration, General Services Administration.

GT-904-80 (special certificate—Government traffic), filed June 23, 1980. Applicant: W. T. MYLES TRANSPORTATION CO., P.O. Box 321, Conley, GA 30027. Representative: Archie B. Culbreth and John P. Tucker, Jr., Archie B. Culbreth, P.C., Suite 202, Atlanta, GA 30345. Government agency involved: Agencies listed in U.S. Government Manual (1979-80 edition.).

GT-905-80 (special certificate—Government traffic), filed June 23, 1980. Applicant: BRUCE JOHNSON TRUCKING CO., INC., 3408 N. Graham St., P.O. Box 5647, Charlotte, NC 28225. Representative: Charles Ephraim, Suite 600, 1250 Connecticut Ave., NW., Washington, D.C. 20036. Government agency involved: Department of Defense and General Services Administration.

GT-906-80 (special certificate—Government traffic), filed June 23, 1980. Applicant: NEW TRUCK LINES, INC., U.S. Highway 27 East, Perry, FL 32347. Representative: W. P. Kurtz, Jr. P.O. Box 618, Seaford, DE 19973. Government agency involved: Agencies listed in U.S. Government Manual (1979-80 edition.).

GT-907-80 (special certificate—Government traffic), filed June 23, 1980. Applicant: DALGARNO TRANSPORTATION, INC., Casper, WY. Representative: William S. Richards, P.O. Box 2465, Salt Lake City, UT 84110. Government agency involved: Agencies listed in U.S. Government Manual (1979-80 edition.).

GT-908-80 (special certificate—Government traffic), filed June 23, 1980. Applicant: MAMMOTH OF ALASKA, INC., 1048 Whitney Rd., Anchorage, AK 99501. Representative: Arthur R. Hauver, 810 West Second Ave., Anchorage, AK 99501. Government agency involved: Agencies listed in U.S. Government Manual (1979-80 edition.).

GT-909-80 (special certificate—Government traffic), filed June 23, 1980. Applicant: MIDWESTERN TRANSPORTATION, INC., 20 S.W. 10th, Oklahoma City, OK 73125.

Representative: C. L. Phillips, Licensed Practitioner, Rm. 248—Classen Terrace Bldg., 1411 N. Classen, Oklahoma City, OK 73106. Government agency involved: Agencies listed in U.S. Government Manual (1979–80 edition.).

GT–910–80 (special certificate—Government traffic), filed June 23, 1980. Applicant: THURSTON MOTOR LINES, INC., 600 Johnston Rd., Charlotte, NC 28206. Representative: John V. Luckadoo (address same as applicant). Government agency involved: Agencies listed in U.S. Government Manual (1979–80 edition).

GT–911–80 (special certificate—Government traffic), filed June 23, 1980. Applicant: LESTER C. NEWTON TRUCKING CO., P.O. Box 618, Seaford, DE 19973. Representative: W. P. Kurtz, Jr., P.O. Box 618, Seaford, DE 19973. Government agency involved: Department of Defense, Delaware River Basin Commission, General Accounting Office, General Services Administration, Internal Revenue Service, National Oceanic and Atmospheric Administration, U.S. Government Printing Office and U.S. Postal Service.

GT–912–80 (special certificate—Government traffic), filed June 24, 1980. Applicant: ATLANTIC INTERSTATE MESSENGERS, INC., 201 Henry St., Stamford, CT 06904. Representative: John R. Sims, Jr., Dennis D. Kirk, Goff, Sims, Cloud, Stroud & Walker, P.C., 915 Pennsylvania Bldg., 425 13th St. NW., Washington, DC 20004. Government agency involved: Agencies listed in U.S. Government Manual (1979–80 edition).

GT–913–80 (special certificate—Government traffic), filed June 24, 1980. Applicant: GORSKI BULK TRANSPORTATION, INC., R.R. #14, Harrow, Ontario, Canada NOR 1GO. Representative: William H. Shawn, 1730 M St. NW., Suite 501, Washington, DC 20036. Government agency involved: Agencies listed in U.S. Government Manual (1979–80 edition).

GT–914–80 (special certificate—Government traffic), filed June 25, 1980. Applicant: ARMSTRONG TRANSFER & STORAGE CO., INC., 3927 Winchester Rd., Memphis, TN 38118. Representative: Carroll B. Jackson, 1810 Vincennes Rd., Richmond, VA 23229. Government agency involved: Agencies listed in U.S. Government Manual (1979–80 edition).

GT–915–80 (special certificate—Government traffic), filed June 25, 1980. Applicant: CHARTER EXPRESS, INC., 8418 Talmadge Rd., R. D. #6, Ravenna, OH 44226. Representative: William P. Jackson, Jr., 3426 N. Washington Blvd., P.O. Box 1240, Arlington, VA 22210. Government agency involved: Agencies listed in U.S. Government Manual (1979–80 edition) and reissues.

GT–916–80 (special certificate—Government traffic), filed June 25, 1980. Applicant: HAGWOOD ENTERPRISES, INC., 2472 Pinson Highway, Birmingham, AL 35217. Representative: William P. Jackson, Jr., 3426 N. Washington Blvd., P.O. Box 1240, Arlington, VA 22210. Government agency involved: Agencies listed in U.S. Government Manual (1979–80 edition) and reissues.

GT–917–80 (special certificate—Government traffic), filed June 25, 1980. Applicant: T. DEL FARNO TRUCKING CO., 30 Lockbridge St., Pawtucket, RI 02860. Representative: Frank J. Weiner, Esq., 15 Court Square, Boston, MA 02108. Government agency involved: Agencies listed in U.S. Government Manual (1979–80 edition).

GT–918–80 (special certificate—Government traffic), filed June 25, 1980. Applicant: G. H. HARNUM, INC., 867 Woburn St., Wilmington, MA 01887. Representative: Frank J. Weiner, Esq., 15 Court Square, Boston, MA 02108. Government agency involved: Agencies listed in U.S. Government Manual (1979–80 edition).

GT–919–80 (special certificate—Government traffic), filed June 25, 1980. Applicant: PLYMOUTH ROCK TRANSPORTATION CORP., 1230 Massachusetts Ave., Boston, MA 02125. Representative: Frank J. Weiner, Esq., 15 Court Square, Boston, MA 02108. Government agency involved: Agencies listed in U.S. Government Manual (1979–80 edition).

GT–920–80 (special certificate—Government traffic), filed June 25, 1980. Applicant: DEL TRANSPORT, INC., P.O. Box 6125, Providence, RI 02940. Representative: Frank J. Weiner, Esq., 15 Court Square, Boston, MA 02108. Government agency involved: Agencies listed in U.S. Government Manual (1979–80 edition).

GT–921–80 (special certificate—Government traffic), filed June 24, 1980. Applicant: GAINES MOTOR LINES, INC., P.O. Box 1549, Hickory, NC 28601. Representative: Lawrence E. Lindeman, 425 13th St. NW., Suite 1032, Washington, DC 20004. Government agency involved: Departments of Defense, Commerce and Agriculture; General Accounting Office, General Services Administration, Internal Revenue Service, U.S. Government Printing Office and U.S. Postal Service.

GT–922–80 (special certificate—Government traffic), filed June 24, 1980. Applicant: CENTRAL TRANSFER COMPANY, 100 Kellogg St., Jersey City, NJ 07305. Representative: Ronald I. Shapss, Esq., 450 Seventh Ave., New York, NY 10001. Government agency involved: Agencies listed in U.S. Government Manual (1979–80 edition).

GT–923–80 (special certificate—Government traffic), filed June 24, 1980. Applicant: PIONEER VAN LINES, INC., Box 417, Kenai, AK 99611. Representative: J. G. Dail, Jr., P.O. Box LL, McLean, VA 22101. Government agency involved: Agencies listed in U.S. Government Manual (1979–80 edition).

GT–924–80 (special certificate—Government traffic), filed June 24, 1980. Applicant: A & B CARTAGE, INC., 2411 Robeson St., Rayetteville, NC 28305. Representative: Eric Meierhoefer, Suite 423, 1511 K St., NW., Washington, DC 20005. Government agency involved: Department of Defense.

GT–925–80 (special certificate—Government traffic), filed June 24, 1980. Applicant: A-WHISCO, INC., 4011 Penn Belt Place, Forestville, MD 20028. Representative: David Earl Tinker, Esq., 1000 Connecticut Ave. NW., Suite 1200, Washington, DC 20036. Government agency involved: Department of Defense and General Services Administration.

GT–926–80 (special certificate—Government traffic), filed June 24, 1980. Applicant: TAKOMA TRANSFER AND STORAGE CO., INC., 4011 Penn Belt Place, Forestville, MD 20028. Representative: David Earl Tinker, Esq., 1000 Connecticut Ave. NW., Suite 1200, Washington, DC 20036. Government agency involved: Department of Defense and General Services Administration.

GT–927–80 (special certificate—Government traffic), filed June 24, 1980. Applicant: GOLDEN NORTH VAN LINES, INC., P.O. Box 4–176, Anchorage, AK 99509. Representative: J. G. Dail, Jr., P.O. Box LL, McLean, VA 22101, and John M. Stern, Jr., P.O. Box 1672, Anchorage, AK 99510. Government agency involved: Agencies listed in U.S. Government Manual (1979–80 edition).

GT–928–80 (special certificate—Government traffic), filed June 24, 1980. Applicant: SOUTHERN INTERMODAL LOGISTICS, INC., P.O. Box 1375, Thomasville, GA 31792. Representative: William P. Jackson, Jr., 3426 N. Washington, Blvd., P.O. Box 1240, Arlington, VA 22210. Government agency involved: Agencies listed in U.S. Government Manual (1979–80 edition) and reissues thereof.

GT–929–80 (special certificate—Government traffic), filed June 24, 1980. Applicant: THE SERVICE TRANSPORT CO., P.O. Box 956, Ravenna, OH 44266. Representative: William P. Jackson, Jr., 3426 N. Washington Blvd., P.O. Box 1240, Arlington, VA 22210. Government

agency involved: Agencies listed in U.S. Government Manual (1979–80 edition) and reissues thereof.

GT–930–80 (special certificate—Government traffic), filed June 3, 1980. Applicant: TRANSPORT EXPRESS, INC., 3512 Rockville Rd., Bldg 122–E, Indianapolis, IN 46222. Representative: James W. Walker, Sr., President (address same as applicant). Government agency involved: Department of Defense.

GT–931–80 (special certificate—Government traffic), filed June 20, 1980. Applicant: THE WAHL MOVING & TRANSFER CO., 16100 South Waterloo Rd., Cleveland, OH 44110. Representative: Walter Keal, Traffic Manager (address same as applicant). Government agency involved: Agencies listed in U.S. Government Manual (1979–80 edition).

GT–932–80 (special certificate—Government traffic), filed June 19, 1980. Applicant: TRANSPORT, INC., P.O. Box 396, Moorhead, MN 56560. Representative: Ronald B. Pitsenbarger (address same as applicant). Government agency involved: Department of Defense.

GT–933–80 (special certificate—Government traffic), filed June 6, 1980. Applicant: CARLTON ENTERPRISES, INC., P.O. Box 520, Mantua, OH 44255. Representative: Neal A. Jackson, Esq., Sanford, Adams, McCullough & Beard, 1156 15th St., NW., Washington, D.C. 20005. Government agency involved: Agencies listed in U.S. Government Manual (1979–80 edition).

By the Commission.

Agatha L. Mergenovich,

Secretary.

[FR Doc. 80–19980 Filed 7–2–80; 8:45 am]

BILLING CODE 7035–01–M

Transportation of Government Traffic; Special Certificate Letter Notice(s)

The following letter notices request participation in a Special Certificate of Public Convenience and Necessity for the transportation of general commodities (except classes A and B explosives, radioactive materials, etiologic agents, shipments of secret materials, and weapons and ammunition which are designated sensitive by the United States Government), between points in the United States (including Alaska and Hawaii), restricted to the transportation of traffic handled for the United States Government or on behalf of the United States Government where the government contractor (consignee or consignor), is directly reimbursed by the government for the transportation costs, under the Commission's regulations (49 CFR 1062.4), pursuant to a general finding made in Ex Parte No. MC–107, *Government Traffic,* 131 M.C.C. 845 (1979).

An original and one copy of verified statement in opposition (limited to argument and evidence concerning applicant's fitness) may be filed with the Interstate Commerce Commission on or before July 23, 1980. A copy must also be served upon applicant or its representative.

If applicant is not otherwise informed by the Commission within 30 days of the date of its notice in the Federal Register (on or before August 4, 1980), operations may commence subject to its tariff publication's effective date, or the filing of an effective tender pursuant to 49 U.S.C. 10721.

GT–934–80 (special certificate—Government traffic), filed June 25, 1980. Applicant: FOREST HILLS TRANSFER AND STORAGE, INC., 2101 Ardmore Boulevard, Pittsburgh, PA 15221. Representative: John A. Vuono, Esquire, 2310 Grant Building, Pittsburgh, PA 15219. Government Agency involved: Agencies listed in U.S. Government Manual (1979–80 edition).

GT–935–80 (special certificate—Government traffic), filed June 25, 1980. Applicant: CAMPBELL TRANSFER & STORAGE COMPANY, 308 9th Street, Monaca, PA 15061. Representative: John A. Vuono, Esquire, 2310 Grant Building, Pittsburgh, PA 15219. Government Agency involved: Agencies listed in U.S. Government Manual (1979–80 edition).

GT–936–80 (special certificate—Government traffic), filed June 25, 1980. Applicant: O'ROURKE STORAGE & TRANSFER CO., Parkway West, Pittsburgh, PA 15205. Representative: John A. Vuono, Esquire, 2310 Grant Building, Pittsburgh, PA 15219. Government Agency involved: Agencies listed in U.S. Government Manual (1979–80 edition).

GT–937–80 (special certificate—Government traffic), filed June 25, 1980. Applicant: WELESKI TRANSFER, INC., 140 West Fourth Avenue, Tarentum, PA 15084. Representative: John A. Vuono, Esquire, 2310 Grant Building, Pittsburgh, PA 15219. Government Agency involved: Agencies listed in U.S. Government Manual (1979–80 edition).

GT–938–80 (special certificate—Government traffic), filed June 25, 1980. Applicant: THE SNYDER BROTHERS MOVING, INC., d.b.a. GEORGE TRANSPORTATION COMPANY, P.O. Box 427, Warrendale, PA 15086. Representative: John A. Vuono, Esquire, 2310 Grant Building, Pittsburgh, PA 15219. Government Agency involved: Agencies listed in U.S. Government Manual (1979–80 edition).

GT–939–80 (special certificate—Government traffic), filed June 25, 1980. Applicant: WARREN C. SAUERS COMPANY, INC., 200 Rochester Road, Zelienople, PA 16063, Attn: Gerald R. O'Brien. Representative: Henry M. Wick, Jr., 2310 Grant Building, Pittsburgh, PA 15219. Government Agency involved: Agencies listed in U.S. Government Manual (1979–80 edition).

GT–940–80 (special certificate—Government traffic), filed June 25, 1980. Applicant: VESELY BROS. MOVING & STORAGE, INC., P.O. Box 455, Fayette City, PA 15438. Representative: John A. Vuono, Esquire, 2310 Grant Building, Pittsburgh, PA 15219. Government Agency involved: Agencies listed in U.S. Government Manual (1979–80 edition).

GT–941–80 (special certificate—Government traffic), filed June 25, 1980. Applicant: MEADVILLE MOVING & STORAGE, INC., 129 Sycamore Place, Meadville, PA 16335. Representative: John A. Vuono, Esquire, 2310 Grant Building, Pittsburgh, PA 15219. Government Agency involved: Agencies listed in U.S. Government Manual (1979–80 edition).

GT–942–80 (special certificate—Government traffic), filed June 25, 1980. Applicant: DON'S TRANSPORTATION, INC., Railroad Avenue Extension, Albany, NY 12205. Representative: Irving Klein, 371 Seventh Avenue, New York, NY 10001. Government Agency involved: Agencies listed in U.S. Government Manual (1979–80 edition).

GT–943–80 (special certificate—Government traffic), filed June 24, 1980. Applicant: TRIPLE R EXPRESS, INC., 498 First Street, N.W., New Brighton, MN 55112. Representative: Sammuel Rubenstein, Post Office Box 5, Minneapolis, MN 55440. Government Agency involved: Agencies listed in U.S. Government Manual (1979–80 edition).

GT–944–80 (special certificate—Government traffic), filed June 26, 1980. Applicant: ENERGY CARRIERS, INC., 187 W. Orangethorpe Avenue—Suite F, Placentia, CA 92670. Representative: Mel Bryant (address same as applicant). Government Agency involved: Department of Defense and General Services Administration.

GT–945–80 (special certificate—Government traffic), filed June 27, 1980. Applicant: NORTHEAST TRUCK BROKERS OF TEXAS, INC., 806 N. Cage—P.O. Box 826, Pharr, TX 78577. Representative: Thomas R. Kingsley, Attorney, 10614 Amherst Avenue, Silver Spring, MD 20902. Government Agency

involved: Agencies listed in U.S. Government Manual (1979–80 edition).

GT–946–80 (special certificate—Government traffic), filed June 25, 1980. Applicant: PROVOST CARTAGE INC., 7887 rue Grenache, ville d'Anjou, Quebec HIJ 1C4, Canada. Representative: William H. Shawn, 1730 M Street, N.W., Suite 501, Washington, DC 20036. Government Agency involved: Agencies listed in U.S. Government Manual (1979–80 edition).

GT–947–80 (special certificate—Government traffic), filed June 25, 1980. Applicant: AERO LIQUID TRANSIT, INC., 1717 Four Mile Rd., N.E., Grand Rapids, MI 49505. Representative: William H. Shawn, 1730 M Street, N.W., Suite 501, Washington, DC 20036. Government Agency involved: Agencies listed in U.S. Government Manual (1979–80 edition).

GT–948–80 (special certificate—Government traffic), filed June 25, 1980. Applicant: SHAVER TRUCKING, INC., 3600 Highway 68 West, P.O. Box 104, Springdale, AR 72764. Representative: David Earl Tinker, Esquire, 1000 Connecticut Ave., N.W., Suite 1200, Washington, DC 20036. Government Agency involved: Department of Defense and General Services Administration.

GT–949–80 (special certificate—Government traffic), filed June 25, 1980. Applicant: VETZEL MOVING & STORAGE, INC., 511 Letourneau Circle, P.O. Box 7625, Tampa, FL 33673. Representative: David Earl Tinker, Esquire, 1000 Connecticut Ave., N.W., Suite 1200, Washington, DC 20036. Government Agency involved: Department of Defense, General Services Administration, U.S. Coast Guard, and National Aeronautics and Space Administration.

GT–950–80 (special certificate—Government traffic), filed June 25, 1980. Applicant: H. TABENKEN & CO., INC., 33 School Street, Veazie, ME 04401. Representative: David Earl Tinker, Esquire, 1000 Connecticut Ave., N.W., Suite 1200, Washington, DC 20036. Government Agency involved: Department of Defense and General Services Administration.

GT–951–80 (special certificate—Government traffic), filed June 26, 1980. Applicant: PITTSBURGH & NEW ENGLAND TRUCKING CO., 211 Washington Avenue, Dravosburg, PA 15034. Representative: James D. Porterfield (address same as applicant). Government Agency involved: Agencies listed in U.S. Government Manual (1979–80 edition).

GT–952–80 (special certificate—Government traffic), filed June 26, 1980. Applicant: AERO MAYFLOWER TRANSIT CO., INC., P.O. Box 107B, Indianapolis, IN 46206. Representative: W.G. Lowry, Assistant Vice President, (address same as applicant). Government Agency involved: Department of Defense, General Services Administration.

GT–953–80 (special certificate—Government traffic), filed June 26, 1980. Applicant: E.L. FARMER & COMPANY, P.O. Box 3512, Odessa, TX 79760. Representative: E. Larry Wells, P.O. Box 45538, Dallas, TX 75245. Government Agency involved: Agencies listed in U.S. Government Manual (1979–80 edition).

GT–954–80 (special certificate—Government traffic), filed June 26, 1980. Applicant: WILEY'S EXPRESS, INC., P.O. Box 2009, 118 Hall Street, Concord, NH 03301. Representative: Frank J. Weiner, Esquire, 15 Court Square, Boston, MA 02108. Government Agency involved: Agencies listed in U.S. Government Manual (1979–80 edition).

GT–955–80 (special certificate—Government traffic), filed June 26, 1980. Applicant: IVORY VAN LINES, INC., 5601 Corporate Way, Suite 107, West Palm Beach, FL 33407. Representative: Martin J. Leavitt, Sullivan & Leavitt, P.C., 22375 Haggerty Road, P.O. Box 400, Northville, NC 48167. Government Agency involved: Agencies listed in U.S. Government Manual (1979–80 edition).

GT–956–80 (special certificate—Government traffic), filed June 26, 1980. Applicant: ONEIDA MOTOR FREIGHT, INC., Commercial Avenue, Carlstadt, NJ 07072. Representative: Donald T. Singleton (address same as applicant). Government Agency involved: Agencies listed in U.S. Government Manual (1979–80 edition).

GT–957–80 (special certificate—Government traffic), filed June 26, 1980. Applicant: HALLAMORE MOTOR TRANSPORTATION, INC., 795 Plymouth Street, Holbrook, MA 02343. Representative: Frank J. Weiner, Esquire, 15 Court Square, Boston, MA 02108. Government Agency involved: Agencies listed in U.S. Government Manual (1979–80 edition).

GT–958–80 (special certificate—Government traffic), filed June 26, 1980. Applicant: JOHN BUSCH, Box 211, Conyngham, PA 18219. Representative: Joseph F. Hoary, 121 South Main Street, Taylor, PA 18517. Government Agency involved: Agencies listed in U.S. Government Manual (1979–80 edition).

GT–959–80 (special certificate—Government traffic), filed June 26, 1980. Applicant: BOLUS MOTOR LINES, INC., 700 North Keyser Avenue, Scranton, PA 18508. Representative: Joseph F. Hoary, 121 South Main Street, Taylor, PA 18517. Government Agency involved: Agencies listed in U.S. Government Manual (1979–80 edition).

GT–960–80 (special certificate—Government traffic), filed June 26, 1980. Applicant: RIGGS FOOD EXPRESS, INC., P.O. Box 26, New Bremen, OH 45869. Representative: E. Stephen Heisley, 805 McLachlen Bank Building, 666 Eleventh Street, N.W., Washington, D.C. 20001. Government Agency involved: Agencies listed in U.S. Government Manual (1979–80 edition).

GT–961–80 (special certificate—Government traffic), filed June 26, 1980. Applicant: FROST TRUCK LINES, INC., P.O. Box 28, Billings, MT 59103. Representative: E. Stephen Heisley, 805 McLachlen Bank Building, 666 Eleventh Street, N.W., Washington, D.C. 20001. Government Agency involved: Agencies listed in U.S. Government Manual (1979–80 edition).

GT–962–80 (special certificate—Government traffic), filed June 26, 1980. Applicant: AMERICAN AUTO SHIOPERS, INC., 450 7th Avenue, Suite 300, New York, NY 10001. Representative: Jack Pearce, Esquire, 1000 Connecticut Avenue, N.W., Washington, D.C. 20036. Government Agency involved: Agencies listed in U.S. Government Manual (1979–80 edition).

GT–963–80 (special certificate—Government traffic), filed June 26, 1980. Applicant: ALLSTATES TRANSWORLD VAN LINES, 5736 Martin Luther King Drive, St. Louis, MO 63112. Representative: Jack Pearce, Esquire, 1000 Connecticut Avenue, N.W., Washington, D.C. 20036. Government Agency involved: Agencies listed in U.S, Government Manual (1979–80 edition).

GT–964–80 (special certificate—Government traffic), filed June 26, 1980. Applicant: PAYNE TRANSPORTATION, INC., P.O. Box 1271, Huron, SD 57350. Representative: Charles E. Dye (address same as applicant). Government Agency involved: Agencies listed in U.S. Government Manual (1979–80 edition).

GT–965–80 (special certificate—Government traffic), filed June 26, 1980. Applicant: DANIEL HAMM DRAYAGE COMPANY, Second and Tyler Streets, St. Louis, MO 63102. Representative: John G. Banner, Esquire, 1601 Blue Rock Street, Cincinnati, OH 45223. Government Agency involved: Agencies listed in U.S. Government Manual (1979–80 edition).

GT–966–80 (special certificate—Government traffic), filed June 26, 1980.

Applicant: A & A TRANSFER & STORAGE, INC., 113 Hollywood Blvd., N.W., P.O. Box 2317, Ft. Walton Beach, FL 32549. Representative: David Earl Tinker, Esquire, 1000 Connecticut Avenue, N.W., Suite 1200, Washington, D.C. 20036. Government Agency involved: Department of Defense, General Services Administration.

GT-967-80 (special certificate—Government traffic), filed June 26, 1980. Applicant: KANE TRANSFER COMPANY, a District of Columbia corporation, P.O. Box 7479, Baltimore, MD 21227. Representative: James W. Lawson, Lawson & Keigher, Suite 843, 1511 K Street, N.W., Washington, D.C. 20005. Government Agency involved: Department of Defense.

GT-968-80 (special certificate—Government traffic), filed June 27, 1980. Applicant: C-LINE, INC., Tourtellot Hill Road, Chepachet, RI 02814. Representative: Ronald N. Covert, Esquire, Grove, Jaskiewicz, Gilliam & Cobert, 1730 M Street, N.W., Suite 501, Washington, D.C. 20036. Government Agency involved: Department of Defense.

GT-969-80 (special certificate—Government traffic), filed June 27, 1980. Applicant: DICK HARRIS & SON TRUCKING CO., INC., P.O. Box 10277, Lynchburg, VA 10277. Representative: Morton E. Kiel, Suite 1832, Two World Trade Center, New York, NY 10048. Government Agency involved: Agencies listed in U.S. Government Manual (1979-80 edition).

GT-970-80 (special certificate—Government traffic), filed June 27, 1980. Applicant: ARROW TRUCK LINES, INC., P.O. Box 1416, Birmingham, AL 35201. Representative: William P. Jackson, Jr., 3426 N. Washington Boulevard, P.O. Box 1240, Arlington, VA 22210. Government Agency involved: Agencies listed in U.S. Government Manual (1979-80 edition).

GT-971-80 (special certificate—Government traffic), filed June 27, 1980. Applicant: DIST/TRANS MULTI-SERVICES, INC., d.b.a. TAHWHELLALEN EXPRESS, INC., 1333 Nevada Boulevard, Charlotte, NC 28217. Representative: William P. Jackson, Jr., 3426 N. Washington Boulevard, P.O. Box 1240, Arlington, VA 22210. Government Agency involved: Agencies listed in U.S. Government Manual (1979-80 edition).

GT-972-80 (special certificate—Government traffic), filed June 27, 1980. Applicant: C. HARRELL, INC., Garrison Road, P.O. Box 430, Elmer, NJ 08318. Representative: William P. Jackson, Jr., 3426 N. Washington Boulevard, P.O. Box 1240, Arlington, VA 22210. Government Agency involved: Agencies listed in U.S. Government Manual (1979-80 edition).

GT-973-80 (special certificate—Government traffic), filed June 27, 1980. Applicant: MIDWESTERN PLASTICS & CHEMICALS, INC., 1025 Avenue M, Grand Prairie, TX 75050. Representative: William P. Jackson, Jr., 3426 N. Washington Boulevard, P.O. Box 1240, Arlington, VA 22210. Government Agency involved: Agencies listed in U.S. Government Manual (1979-80 edition).

GT-974-80 (special certificate—Government traffic), filed June 27, 1980. Applicant: RITEWAY TRANSPORT, INC., 2131 W. Roosevelt, Phoenix, AZ. Representative: Bobbie F. Albanese, Law Offices of Robert Fuller, 13215 E. Penn Street, Suite 310, Whittier, CA 90602. Government Agency involved: Agencies listed in U.S. Government Manual (1979-80 edition).

GT-975-80 (special certificate—Government traffic), filed June 27, 1980. Applicant: ASBURY SYSTEM, 2222 East 38th Street, Los Angeles, CA 90058. Representative: Bobbie F. Albanese, Law Offices of Robert Fuller, 13215 E. Penn Street, Suite 310, Whittier, CA 90602. Government Agency involved: Agencies listed in U.S. Government Manual (1979-80 edition).

GT-976-80 (special certificate—Government traffic), filed June 27, 1980. Applicant: AIRWAY TRUCKING CO., 4239 Newton Road, Stockton, CA 95204. Representative: Bobbie F. Albanese, 13215 East Penn Street, Suite 310, Whittier, CA 90602. Government Agency involved: Agencies listed in U.S. Government Manual (1979-80 edition).

GT-977-80 (special certificate—Government traffic), filed June 27, 1980. Applicant: WHEELER FREIGHTWAYS, 3375 South Polaris, Las Vegas, NV 89102. Representative: Rae A. Wheeler, 3375 South Polaris, Las Vegas, NV 89102. Government Agency involved: Agencies listed in U.S. Government Manual (1979-80 edition).

GT-978-80 (special certificate—Government traffic), filed June 27, 1980. Applicant: SULLI-VAN LINES, INC., 43 Cortland Avenue, Highland Park, MI 48203. Representative: Lillian M. Ryan (address same as applicant). Government Agency involved: Department of Defense.

GT-979-80 (special certificate—Government traffic), filed June 27, 1980. Applicant: HEDING TRUCK SERVICE, INC., P.O. Box 97, Union Center, WI 53967. Representative: Nancy R. Beiter, 410 Seventh Street, SE., Washington, D.C. 20003. Government Agency involved: Department of Defense. Agency involved: Agencies listed in U.S. Government Manual (1979-80 edition).

GT-980-80 (special certificate—Government traffic), filed June 25, 1980. Applicant: WILLIAM FRY TRUCKING, 6035 Gettysburg Place, Stockton, CA 95207. Representative: Arden Riess, P.O. Box 6067, Stockton, CA 95206. Government Agency involved: Agencies listed in U.S. Government Manual (1979-80 edition).

GT-981-80 (special certificate—Government traffic), filed June 26, 1980. Applicant: BROWN TRUCKING, INC., 7622 Apple Valley Road, Germantown, TN 38138. Representative: John Paul Jones (address same as applicant). Government Agency involved: Agencies listed in U.S. Government Manual (1979-80 edition).

GT-982-80 (special certificate—Government traffic), filed June 27, 1980. Applicant: O K MOVING & STORAGE COMPANY, INC., 1129 Harmony Road, Norfolk, VA 23502. Representative: Robert J. Gallagher, Esquire, Suite 1112, 1000 Connecticut Avenue, NW, Washington, D.C. 20036. Government Agency involved: U.S. Coast Guard, Department of Defense, General Services Administration.

GT-983-80 (special certificate—Government traffic), filed June 27, 1980. Applicant: KNOX TRUCK LINES, INC., P.O. Box 1226, Grand Prairie, TX 75051. Representative: Fred Knox (address same as applicant). Government Agency involved: Agencies listed in U.S. Government Manual (1979-80 edition).

GT-984-80 (special certificate—Government traffic), filed June 27, 1980. Applicant: CHANDLER TRAILER CONVOY, INC., P.O. Box 9410, Little Rock, AR 72219. Representative: Winston G. Chandler (address same as applicant). Government Agency involved: Agencies listed in U.S. Government Manual (1979-80 edition).

GT-985-80 (special certificate—Government traffic), filed June 30, 1980. Applicant: PORT EAST TRANSFER, INC., 1404 Clinton Street, Baltimore, MD. 21224. Representative: Mel P. Booker, Jr., Hernly & Booker, P.C., 110 S. Columbus Street, Alexandria, VA 22314. Government Agency involved: Agencies listed in U.S. Government Manual (1979-80 edition).

GT-986-80 (special certificate—Government traffic), filed June 27, 1980. Applicant: ANDERSON & SONS TRUCKING CO., d.b.a. JAMES R. ANDERSON, JR., 1887 Deming Way, Sparks, NV 89431. Representative: James R. Anderson, Jr. (address same as applicant). Government Agency involved: Department of Defense, and General Services Administration.

GT-987-80 (special certificate—Government traffic), filed June 27, 1980. Applicant: HOFER, INC., 20th and Bypass, Pittsburg, KS: Mailing Address: P.O. Box 583, Pittsburg, KS 66762. Representative: Larry E. Gregg, P.O. Box 1979, Topeka, KS 66601. Government Agency involved: General Services Administration, Departments of Agriculture, Defense, Energy, and Interior and Transportation.

GT-988-80 (special certificate—Government traffic), filed June 27, 1980. Applicant: CONTAINERFREIGHT TRANSPORTATION COMPANY, P.O. Box 900, Long Beach, CA 90801. Representative: Robert Fuller, 13215 E. Penn Street—Suite 310, Whittier, CA 90602. Government Agency involved: Agencies listed in U.S. Government Manual (1979-80 edition).

By the Commission.

Agatha L. Mergenovich,

Secretary.

[FR Doc. 80-20073 Filed 7-2-80; 8:45 am]

BILLING CODE 7035-01-M

JOINT BOARD FOR THE ENROLLMENT OF ACTUARIES

Advisory Committee on Actuarial Examinations; Meeting

Notice is hereby given that Advisory Committee on Actuarial Examination will meet at the Continental Plaza Hotel, North Michigan Avenue at Delaware, Chicago, Illinois on July 29, 1980 beginning at 8:45 a.m.

The purpose of the meeting is to discuss topics and questions which may be recommended for inclusion in the Joint Board's examinations in actuarial mathematics and methodology, referred to in Title 29, U.S. Code, Sections 1242(a)(1)(B) and (C). A determination as required by Section 10(d) of the Federal Advisory Committee Act (Pub. L. 92-463) had been made that this meeting is for the purpose of considering matters falling within the exemption to public disclosure set forth in Title 5, U.S. Code, Section 552(b)(5) and that the public interest requires such meeting be closed to public participation.

Dated: June 27, 1980.

Leslie S. Shapiro,

Advisory Committee Management Officer, Joint Board for the Enrollment of Actuaries.

[FR Doc. 80-19986 Filed 7-2-80; 8:45 am]

BILLING CODE 4810-25-M

DEPARTMENT OF LABOR

Employment and Training Administration

Reallocation of Funds

AGENCY: Employment and Training Administration, Labor.

ACTION: Thirty-day notice of intent to reallocate funds under title II-D of the Comprehensive Employment and Training Act (CETA).

SUMMARY: Pursuant to 20 CFR 676.47, the Department of Labor announces its intent to reallocate funds in the following amounts from the CETA prime sponsors indicated below. The purpose of this notice is to provide 30 days notice to all interested parties of the Department's intent to reallocate these funds.

COMMENTS DUE: August 4, 1980.

FOR FURTHER INFORMATION CONTACT: Robert Anderson, Administrator, Office of Comprehensive Employment Development, 601 D Street, N.W., Room 5010, Washington, D.C. 20213, Telephone: 202-376-6254.

SUPPLEMENTARY INFORMATION: A review of the following prime sponsors' actual Title II-D operations, compared to their Fiscal Year 1980 planned operations as of May 31, 1980, indicates that these prime sponsors are substantially below plan and are not effectively utilizing the funds available to them. Therefore, the Department is notifying these prime sponsors that it intends to reallocate excess funds which have accumulated due to the underperformance.

The estimated amount to be reallocated from each prime sponsor is indicated below. The prime sponsors are given 30 days to reply to the notice of intent to reallocate and to correct identified deficiencies. The Governor of the appropriate State and the general public are also given 30 days in which to comment on the proposed allocations.

Region I

New Haven, Connecticut	12,600
BOS—Rhode Island	26,300
City of Cambridge, Massachusetts	22,000
York County, Maine	56,000

Region II

Albany City, New York	27,852
Rensselaer County, New York	15,884
Elizabeth City, New Jersey	34,481

Region III

Westmoreland County, Pennsylvania	29,704
Prince Georges County, Maryland	44,176
Northern Virginia Consortium	31,447

Region IV

BOB—Florida	138,425
Broward County	193,795
Pinellas/St. Petersburg Consortium	54,579
Seminole County	71,190
City of Tampa	60,116
Hillsborough County	45,878
South Carolina Statewide Consortium	1,607,780
BOS—Tennessee	352,230

Region V

Cook County, Illinois	136,000
Kane County, Illinois	102,000
DuPage County, Illinois	116,000
Southwestern Indiana Consortium	47,000
St. Clair County, Michigan	150,000

Region VI

BOS—Louisiana	495,000
El Paso Consortium	600,000

Region VII

CIRALG, Iowa	47,200
Woodbury County, Iowa	37,800
IOWA—BOS	151,900
Kansas City/Wyandotte Consortium, Kansas	48,000

Region VIII

None.

Region IX

Ventura County, California	98,870
San Luis Obispo County, California	27,190
Stanislaus County, California	189,200
Shasta County, California	15,960
Trust Territories	68,250
Inland Manpower Consortium, California	222,990
Hawaii—BOS	55,320
Pima County, Arizona	11,830
BOS—Arizona	150,000
City of Tucson, Arizona	215,790
Guam	10,040
Washoe County, Nevada	22,200

Region X

BOS—Oregon	241,600
Thurston County, Washington	28,032

Dated: June 30, 1980.

Charles B. Knapp,

Deputy Assistant Secretary for Employment and Training.

[FR Doc. 80-20053 Filed 7-2-80; 8:45 am]

BILLING CODE 4510-30-M

NATIONAL TRANSPORTATION SAFETY BOARD

[N-AR 80-27]

Reports, Safety Recommendations and Responses; Availability

Aircraft Accident Reports

Eastern Airlines, Inc., Boeing 727-25, N8139, William B. Hartsfield Atlanta International Airport, Atlanta, Georgia, August 22, 1979 (NTSB-AAR-80-6).—The National Transportation Safety Board on June 24 released its formal investigation report on an incident which occurred when Eastern's Flight 693 encountered a small but intense rainshower with associated wind shears on the final approach to the Atlanta airport. The aircraft, with 71 passengers and 6 crewmembers on board, came within 375 feet of crashing before it exited the shower and a missed approach was completed.

The Safety Board has determined that the probable cause of this incident was the unavailability to the flightcrew of timely information concerning a rapidly

changing weather environment along the instrument landing system final approach course. The unavailability of this data resulted in an inadvertent encounter with a localized but heavy rainshower with associated wind shears which contained changes in the horizontal and vertical wind velocities which required the flightcrew to use extreme recovery procedures to avoid an accident. Contributing to this incident was the lack of equipment for the airport terminal area that could have detected, monitored, and provided quantitative measurements of wind shear both above and outside the airport's boundaries.

Investigation showed that at the time the Eastern flight entered the wind shear it was 3½ miles from the end of runway 27L. The Atlanta Hartsfield Airport was equipped with a Low Level Wind Shear Alert System, but the system is designed basically to detect surface level wind shear within the boundary of the airport and had little or no capability to detect a wind shear aloft, or outside the airport boundaries. The Safety Board believes that had a wind sensor been located along the final approach course, and had the downdraft in the wind shear affected the surface wind sufficiently to activate the alarm system, the Low Level Wind Shear Alert System might have provided some warning. The probability that this warning might be given indicates that some consideration should be given to placing wind sensors outside the airport boundary and along the final approach courses to an airport's primary runway.

The Board also noted that the major criterion upon which the flightcrews at Atlanta based their decision to land in the presence of known thunderstorm activity was the fact that their radar showed no contour-producing thunderstorm cells above the runway approach course. This criterion may still expose an aircraft to hazardous weather conditions. Even a level 1 or level 2 cell may have the potential to generate conditions which could endanger an aircraft flying beneath it on a landing approach, especially if the cell is in its generation stage. The Board believes that any echo-producing storm cell located astride the landing approach course should be avoided regardless of whether or not it can be contoured by the aircraft's radar.

The investigation report on this incident provides information showing that since November 1974 the Safety Board has initiated 22 recommendations concerning wind shear and associated areas. These recommendations were originated during the Board's investigations of wind shear related accidents and special studies on the subject. They addressed areas concerning weather reporting, pilot reporting, storm classification, wind shear detection equipment, inflight procedures, and flightcrew training. As a result of Federal Aviation Administration and industry response to the problem identified in these investigations and the Board's recommendations, progress has been made toward minimizing the hazards contained in wind shears.

Nevada Airlines, Inc., Martin 404, N40438, Tusayan, Arizona, November 16, 1979 (NTSB-AAR-80-7).—This investigation report, also made public on June 24, shows that Nevada Airlines Flight 2504 crashed into a clearing in a heavily wooded area about 1.5 mi north of the departure end of runway 3 at Tusayan's Grand Canyon National Park Airport. The aircraft crashed shortly after takeoff from runway 3. Of the 44 persons aboard, 10 were injured seriously. The aircraft was damaged substantially during the crash sequence and was destroyed by ground fire.

The Safety Board determined that the probable cause of the accident was the unwanted autofeather of the left propeller just after takeoff and an encounter with turbulence and downdrafts—a combination which exceeded the aircraft's single-engine climb capability which had been degraded by the high density altitude and a turn to avoid an obstacle in the flightpath. Also, the available climb margin was reduced by the rising terrain along the flightpath. The cause(s) for the unwanted autofeather of the left propeller could not be determined.

Safety Board investigation disclosed no evidence of preimpact malfunction or failure of the left engine or of its autofeathering system. Performance data showed that the aircraft, taking off at almost maximum weight, should have been able to climb at 310 feet per minute on one engine developing takeoff power, even after considering the negative effects of density altitude—The combination of 56-degree temperature and the 6,606-foot elevation of the runway. But the Board concluded that rising terrain canceled more than 40 percent of this possible rate, and downrafts and turbulence exceeded the remainder.

Further, the Safety Board stated that evacuation was hampered by loose seats and debris in the cabin aisle. The flight attendant was knocked from her seat at impact and had to be pulled free of loose seats by a passenger. The attendant opened one of the three emeregency window exits which were used in the evacuation.

U.S. Civil Aviation Accidents, Issue No. 7 of 1979 Accidents (BA-80-4).—The Safety Board coupled its issuance on June 19 of 300 general aviation accident reports with a reminder of a fundamental rule of safe flight—the pilot's responsibility to maintain flying speed regardless of distractions or the attitude of the aircraft. The Board noted that 28 of the cases reported in its seventh issue of 1979 accidents involved the failure of the pilot to obtain or maintain flying speed. The Board's press release, No. SB 80-53, which accompanied issuance of this volume highlighted one accident involving a single-engine craft which was towing a banner off Daytona Beach, Fla., June 19, 1979. The pilot said he saw a body in the water and began circling the spot in an attempt to mark it for a lifeguard search boat. After flying numerous circles, the aircraft stalled, nosed down and crashed into the ocean. The pilot was seriously injured, but survived. His aircraft was demolished.

Note.—This publication is issued irregularly, normally 15 times each year. The brief format presents the facts, conditions, circumstances, and probable cause(s) for each accident. Additional statistical information is tabulated by injury index, injuries, and causal factors. The brief reports in Issue No. 7 contain essential information; more detailed data may be obtained from the original factual reports on file in the Washington office of the Safety Board. Upon request, factual reports will be reproduced commercially at an average cost of 7 cents per page for printed matter, $1 per page for black-and-white photographs, and $1.50 per page for color photographs, plus postage. Requests concerning aircraft accident report briefs should include (1) date and place of occurrence, (2) type of aircraft and registration number, and (3) name of pilot. Address request to: Public Inquiries Section, National Transportation Safety Board, Washington, D.C. 20594.

Copies of Issue No. 7 of the brief format reports may be purchased from the National Technical Information Service, U.S. Department of Commerce, Springfield, Va. 22161.

Marine Accident Reports

Collision of the S/T MOBIL VIGILANT and the S/T MARINE DUVAL on the Neches River near Beaumont, Texas, February 25, 1979 (NTSB-MAR-80-8).—The Safety Board's formal investigation report concerning this accident was released June 25. The report shows that the S/T MARINE DUVAL sank after colliding with the S/T MOBIL VIGILANT at a bend in the Neches River near Beaumont. The total damage to the vessels was estimated at $6,200,000. No

persons were injured. The sunken MARINE DUVAL blocked the river for over 3 days, disrupting deep-draft vessel traffic via the port of Beaumont. The investigation was conducted jointly by the Safety Board and the U.S. Coast Guard. The formal investigation began on February 27, 1979, at Port Arthur, Texas.

The Safety Board has determined that the probable cause of the accident was the pilots' loss of control of their vessels, in a meeting situation in a bend, due to their failure to timely compensate for the effects on maneuverability of the limited depth of the channel, bank effect, and current eddies. Contributing to the accident was the failure of both pilots to use radar and their ineffective use of bridge-to-bridge radiotelephone to avoid meeting in a bend. The MARINE DUVAL sank as a result of hull damage below the waterline which was caused by the MOBIL VIGILANT's bulbous bow.

Safety Board Vice Chairman Elwood T. Driver and Members Francis H. McAdams and G. H. Patrick Bursley participated in the adoption of the report. Chairman James B. King and Member Patricia A. Goldman did not participate. In a separate concurring and dissenting statement, included in the printed report, Member McAdams disagreed that the MARINE DUVAL pilot lost control of his vessel. Member McAdams stated that the pilot acted reasonably and prudently in attempting to avoid the collision, whereas the pilot of the MOBIL VIGILANT did lose control. Member McAdams also argued that the MOBIL VIGILANT pilot should have slowed his ship when he first sighted the other to avoid a meeting in the bend.

As a result of its investigation, the Safety Board on June 9, 1980, recommended that the U.S. Coast Guard review existing Sabine-Neches Waterway traffic agreements and develop any necessary vessel passing and maneuvering guidelines and radio communications procedures for the waterway, taking into consideration vessel size, draft and speed in relation to channel width, depth and configuration of the waterways (recommendation M-80-36). Also on June 9, the Board recommended (M-80-37 through -41) that the Sabine River Pilots: Review communications procedures to insure that the movements of vessels on Sabine-Neches Waterways are closely monitored and coordinated; implement a policy that pilots avoid passing in bends, and incorporate a similar provision in the "Voluntary Traffic Control Agreement of the Maritime Industry of the Sabine Waterways"; advise member pilots to verify the locations of vessels moving on the Sabine-Neches Waterways before getting underway and to avoid departures or vessel movements which result in passing situations that could be eliminated; review pilot rotation policies relative to vessel movements and avoid assigning pilots to two consecutive long trips without adequate rest between such assignments; and urge pilots to make greater use of a vessel's bridge-watch and electronic equipment in support of its navigational control while piloting. (See also 45 FR 41552, June 19, 1980.)

Collision of Spanish Freighter M/V POLA DE LENA with Two Mississippi River Ferry Boats and Gretna Ferry Landing, New Orleans, Louisiana, February 3, 1979 (NTSB-MAR-80-10); Recommendation M-80-42 to the U.S. Coast Guard, June 20, 1980.—This accident was investigated by the U.S. Coast Guard for the Safety Board, pursuant to the Independent Safety Board Act of 1974. The formal investigation commenced February 6, 1979, in New Orleans and was reconvened on February 12 and March 2, 13, and 16 of last year. The Safety Board's report, released June 25, is based on the evidence and testimony developed by this investigation. The investigation showed that the outbound POLA DE LENA sustained a steering gear failure and collided with the Gretna Ferry terminal and the ferry vessel M/V CITY OF GRETNA which was moored at the terminal at New Orleans. The impact of the collision caused the ferry vessel M/V SEN. ALVIN T. STUMPF to break loose from its terminal moorings and to drift down stream. There were no deaths or injuries, but property damage was estimated at $1,310,000.

After considering all facts pertinent to its statutory responsibility to determine the cause or probable cause of the accident and to make recommendations, the Safety Board determined that the probable cause of the accident was a steering gear failure on the POLA DE LENA which was caused by a loose electrical connection within the steering console on the bridge which interrupted electrical control of the starboard steering pump and the failure of the crew to energize the port steering pump immediately while continuing to use the nonfollowup, pushbutton mode. Contributing to the accident was the absence of written instructions prescribing the proper procedures to be followed in the event of a steering failure.

In its recommendation letter, forwarded to the Coast Guard on June 20, the Safety Board noted that at the time of the accident the POLA DE LENA had been in service for about 13 months. The vessel's steering gear, which had functioned satisfactorily before the accident, was a modern design which incorporated redundancy to provide two separate, parallel electric-hydraulic steering systems. However, no operating instructions nor a block diagram was posted on the navigation bridge to explain the procedures to be followed to make optimum use of the available redundancy to correct steering failures. Accordingly, the Safety Board recommended that the Coast Guard:

> Require each self-propelled vessel of 1,600 gross tons or greater navigating in confined or congested waters of the United States to have operating instructions and a block diagram that clearly and simply explain the changeover procedures for the remote steering gear control systems and steering gear power units on the vessel. The instructions and block diagram should be permanently displayed both on the navigation bridge and in the steering engineroom. (Class II, Priority Action) (M-80-42)

1979 Transportation Accident Statistics, Preliminary

According to the Safety Board's press release No. SB 80-36, issued May 13, highway fatalities and all transportation related deaths rose in 1979, but the increases were significantly less than they had been in the previous 2 years. Both categories increased by from 3 to 5 percent in 1977 and 1978. In 1979, highway deaths rose 1.5 percent and total transportation fatalities were up 1 percent. On U.S. highways, where historically most transportation fatalities occur, 51,083 persons were killed last year as compared with 50, 331 in 1978, according to preliminary data. All transportation modes registered 55,858 deaths in 1979; there were 55,349 in 1978. The Board's statistics are detailed in tabular form in press release SB 80-36 and shown in an accompanying pie chart.

Responses to Safety Recommendations

Aviation

A-76-37, from the Federal Aviation Administration, June 20, 1980.—Updates FAA action taken concerning a recommendation issued April 1, 1976, as a result of investigation of the crash of an Eastern Air Lines Boeing 727 during a precision instrument approach to John F. Kennedy International Airport, Jamaica, N.Y., on June 24, 1975. The recommendation asked FAA to revise appropriate air traffic control procedures to specify that the location

and severity of thunderstorms be considered in the criteria for selecting active runways.

With respect to recommendation A-76-37, the Safety Board on March 31 commented on FAA's response of last January 30 (45 FR 10096, February 14, 1980). The Board said it believes that FAA's actions taken to date are a significant step toward improving the safety operations in a terminal area but do not yet fully satisfy the recommendation which specifies the selection of active runways to reduce the chance of an aircraft penetrating or flying below a thunderstorm during approach or takeoff and/or to avoid adverse winds generated by a thunderstorm gust front or the associated downdrafts. The Board also noted that the Low Level Wind Shear Alert System (LLWSAS) does not measure winds in the approach or climb out zones beyond the perimeter of an airport; reference paragraph 981, ATC Procedures Handbook, 7110.65A, "The LLWSAS is designed to detect possible low level wind shear conditions around the periphery of an airport. It does not detect wind shear beyond that limitation."

The Board further noted in its March 31 letter that the changes to the Facility Operations Handbook 7210.3E, do provide for improved collection and dissemination of SIGMET's and PIREP's. While the Board agrees that SIGMET's are very useful to aircraft while en route in planning routes or alternate actions in the event of severe weather, they are not sufficiently timely or detailed to warn aircraft of specific hazards in a terminal area. PIREP's can be sufficiently detailed and timely to be useful, but their collection is frequently happenstance, requiring an aircraft to be in a specific location to observe a particular hazard.

Regarding the Center Weather Service Units and the problem of timeliness and detail, the Board stated that they are not presently staffed to keep continuous watch in each terminal area within the Air Route Traffic Control Center's area of responsibility, nor do they have available the detailed data required to define the hazard to individual runways at an airport. What is required is a set of objective criteria based upon the proximity and intensity of thunderstorms in terminal areas to select an approach path and runway free of thunderstorm hazards. To accomplish this, sensors to adequately describe the thunderstorm activity beyond the airport perimeter will be required. Although the LLWSAS is a major step forward in the safety of terminal operations, it is too limited in area coverage to meet the requirements of this recommendation.

FAA's June 20 response reports that the FAA Facility Operation and Administration Handbook (7210.3E) has been revised to include specific assignment of responsibility for "selecting active runways." It will be further revised to specifically include "severe weather activity" as one of the several factors to be considered in the selection process. Because this change cannot be accomplished to the printed handbook prior to an effective date of October 1, FAA is issuing it as a notice, to be effective upon receipt. A copy of the revised requirements is attached to FAA's response.

Further, FAA reports that sensor equipment such as the "pressure jump detector," intended for severe weather location/intensity detection, is not presently available for operational use. Should that or other similar equipment become available and its use be determined feasible, it will be considered for incorporation into the National Airspace System.

Highway

H-80-24, from the National Highway Traffic Safety Administration, June 5, 1980.—Response is to a recommendation issued as a result of the Safety Board's special study, "Fatal Highway Accidents on Wet Pavement—The Magnitude, Location, and Characteristics." The recommendation called on NHTSA to develop a program to alert the public to the component factors and magnitude of the wet-pavement accident problem. (See 45 FR 18210, March 20, 1980.)

In response, NHTSA states that it is not optimistic that such an approach would be effective, since wet pavement driving problems involve much more than a lack of public awareness, which may not even be a primary causal factor. NHTSA states that the typical public awareness program tends to oversimplify the problem, and conveys little more than well-worn admonitions, such as: "Slow Down," "Don't Slam on the Brakes," or "Increase Your Following Distance." NHTSA states, "Motorists have been exposed to information like this for years, with no demonstrated effect."

NHTSA reports one small project is underway—development of public information materials to increase the voluntary use of safety helmets among motorcyclists. The purpose of the project is to determine what makes a public information program successful, to develop materials, and to then evaluate their effect on a single target safety behavior. However, a limited budget in safety programs research, and the necessity to address so many high priority research needs, has prevented NHTSA from mounting a program that would be comprehensive enough to include a broader array of safety problem areas, such as wet pavement accidents.

NHTSA's approach has been to incorporate instructional material on wet weather driving into all of NHTSA's major safety education programs; e.g., the Safe Performance Curriculum for novice drivers and Driver Manuals produced for State driver licensing. By presenting the information in this format, there is more time to convey essential facts, make sure the audience fully understands what actions need to be taken and, in the case of NHTSA's novice program, practice the correct driving responses under simulated wet pavement conditions. Further, NHTSA says it prefers to concentrate its public awareness efforts on higher priority topics, such as 55 mph compliance, safety belt usage, and alcohol impaired driving. NHTSA believes these are topics where the required information and associated actions are straightforward, easy to explain (e.g., "Friends don't let friends drive drunk") and where the potential life-saving benefits are much greater.

Pipeline

P-76-48 through -55, from The Nebraska Natural Gas Company, June 19, 1980.—Response is to the Safety Board's inquiry of May 22, 1980, concerning recommendations issued following investigation of the gas explosion and fire which destroyed the Pathfinder Hotel in Fremont, Nebr., January 10, 1976. (See 41 FR 41766, September 23, 1976.) The Safety Board's May 22 letter notes that the only indication from the gas company as to action taken on the recommendations was a letter dated May 22, 1978 (43 FR 26807, June 22, 1978) addressing only recommendation P-76-48, and, based on that letter, the Board has classified P-76-48 as "Closed—Acceptable Action." The Board asked to be advised of any action taken to implement recommendations P-76-49 through -55.

With reference to recommendation P-76-49, which called for written procedures and an inspection program to insure that all plastic pipe joints meet the design and installation provisions of 49 CFR 192(F)—Joining of Materials by Means Other than Welding, the gas company's June 19 response indicates that written procedures had been developed and an inspection program in which the procedure of joining plastic to plastic and plastic to steel by means

other than welding are covered and are currently being updated. Under new minimum safety rules to become effective under 49 CFR 192 (July 1, 1980), the company has further developed written procedures for qualification of all personnel who will be joining plastic to plastic or plastic to steel.

Recommendation P-76-50 called for revision of the company's written procedures to include the maximum length of plastic pipe to be used with compression couplings, the number of foot-pounds of torque required for each size of compression coupling, a time interval during construction between retorquing of couplings, and the type of stiffener to be used with each brand of coupling. In response, the company refers to its May 22, 1978, letter which noted that the use of compression couplings includes a welded strapping procedure to secure the compression coupling and eliminate the possibility of a pullout owing to contraction of pipe. The company has since added to that procedure the use of the Amp-Fit fitting for joining pipe in plastic to plastic and plastic to steel applications and is also using the Normac Lock Stiffener for joining ¾" and 1" services to steel main taps. The use of the Amp-Fit and Normac fitting is also covered in written procedures and qualification testing.

In response to recommendation P-76-51, which asked the company to develop written procedures to handle gas leak emergencies and evacuation and instruct operating and maintenance employees as to their roles in carrying out these procedures, the company reports that immediately following the January 10, 1976, accident, Nebraska Natural developed and updated existing written procedures to handle gas leak emergencies. A new red covered booklet has been distributed to all distribution management personnel and to all construction personnel. The booklet lists procedures to follow and gas company personnel to be contacted in any gas leak emergency. Safety procedures are periodically discussed with all operating personnel. The booklet has further been distributed to police, fire stations, sheriff and civil defense personnel in all jurisdictions.

Recommendation P-76-52 asked the company to develop a procedure to shut down the system during emergencies; as part of this procedure, develop distribution system maps showing valve locations, determine optimum spacing of high-pressure valves in each of the NNG distribution systems, and install additional valves, if necessary, to reduce the time required to shut down a section of main in an emergency. In response, the company states that it has reviewed valve location and frequency. In the Fremont city distribution system, the entire downtown retail and commercial service area has been isolated by valves in high pressure distribution piping. The area has been divided into four zones and a detailed map has been drawn to show location of valves relating to each section. The Fremont operating personnel have all been oriented on valve location and are annually reoriented as to location and procedure. Maps are carried by all key personnel. As to other areas of the city, all new subdivisions are valved to isolate each division for emergency purposes. Evaluation of each area has been made to determine isolation for emergency purposes. District regulator and/or border station delivery points are determined to be adequate to isolate areas in all towns served.

With respect to recommendation P-76-53, which called for development of a method of receiving emergency telephone calls in order to assure immediate response to emergencies and logging of same, the company reports that it now employs the services of a 24-hour telephone answering service located in Fremont at 501 1st National Bank Building to handle all calls that come to the company after hours. The answering service lists 15 employees at all times. As the service receives and logs all calls, it is instructed to immediately contact the serviceman at the top of the list who is specifically on call a week at a time. If that man is not at the number, the service calls the next man on the list until a man is contacted. The servicemen have been trained in the use of all leak detection equipment and carry a device in the vehicle. No charge is made for leak investigation on a 24-hour basis. All other towns, much smaller than Fremont, served have listed in telephone directories the names of supervisory and service personnel that may be reached for emergency purposes. The above-mentioned red booklet is available to all fire and rescue units and the answering service to produce immediate contact.

Recommendation P-76-54 asked the company to improve the customer education program and liaison between the gas company, the police, and the fire departments, and to include in written procedures the methods for notifying police and fire departments of gas emergencies and the planned responses to them. The company reports that it conducts advertising on an annual basis for customer education on what to do and where to call in any instance where a gas odor or leak is noted. Notices are mailed to customers periodically for purposes of identifying the oder of gas. All emergency stations in each town have been notified, provided instruction booklets, and have been instructed on how to respond to any emergency involving a gas leak.

Recommendation P-76-55 asked the company to equip emergency vehicles with combustible gas leak detectors, distribution maps, and other necessary work tools. The company reports that its operating personnel have been specifically trained in the use of leak detection equipment. After-hour service vehicles are equipped with leak detection devices and the necessary work tools with distribution maps available.

Railroad

R-78-47, from the Federal Railroad Administration, June 12, 1980.—Response is to the Safety Board's comments of May 9 concerning FRA's previous response of last February 22 (45 FR 30577, May 8, 1980). The recommendations were two of five issued by the Safety Board following investigation of the Louisville & Nashville Railroad Company freight train derailment and puncture of anhydrous ammonia tank cars at Pensacola, Fla., November 9, 1977.

The Board notes in its May 9 letter that recommendation R-78-44, which relates to the use of event recorders on locomotives on main tracks outside of yard limits, would certainly aid in the investigation of accidents which would lead to their prevention. Not only do event recorders provide data useful in reconstructing the accident environment and determination of its cause but railroads can use such data to evaluate and correct any improper train handling techniques used by an engineer on trips not involving an accident. This "before the fact" method of evaluation would be a better tool for the prevention of accidents than the FRA proposed use of an after-the-fact Train Operations Simulator (TOS) which uses an engineer's recollection to assist in developing improved techniques. The Board noted that FRA is in the process of using the TOS with the Illinois Central Gulf Railroad and asked to be apprised of the results of this program. The Board also noted that FRA does not intend to issue regulations concerning the use of event recorders and asked that this recommendation be discussed at the next quarterly meeting.

The Board's May 9 letter, with reference to recommendation R-78-47, stressed that the placement of adequate hazardous materials emergency information on waybills, and the making

of information available to public emergency personnel, is urgently needed. Emergecy personnel must be able to make an immediate assessment of the problem when they obtain and read the waybills. Consequently, the Board believes that FRA should promulgate additional requirements as recommended and not leave such a vital issue, as FRA suggests, up to the voluntary response of shippers. To do so encourages different interpretations of what is needed. The Board asked FRA to reconsider recommendation R-78-47.

FRA's June 12 response addresses only recommendation R-78047. FRA has reconsidered the issue of promulgating regulations to require railroads to provide pertinent hazardous materials emergency information on waybills and to make this information available to public emergency personnel. FRA reconfirms that the pertinent emergency information on waybills for hazardous materials is the proper shipping name of the materials, hazardous classifications, total quantities, and the appropriate placard notations and endorsements. FRA notes that the final rule, Transport of Hazardous Wastes and Hazardous Substances, published at 45 FR 34561 on May 22, 1980, will require display of identification numbers on shipping papers to improve the capability of emergency personnel to quickly identify hazardous materials.

FRA states that use of identification numbers for hazardous materials will (1) serve to verify descriptions of chemicals, (2) provide for rapid identification of materials when it might be inappropriate or confusing to require the display of lengthy chemical names on vehicles, (3) aid in speeding communication of information on materials from accident scenes and in the receipt of more accurate emergency response information, and (4) provide a means for quick access to immediate emergency response information in the Emergency Response Guidebook (manual) that will be distributed by the Materials Transportation Bureau, U.S. Department of Transportation. FRA notes that the MTB refers to the CHEMTREC phone number more than 60 times in this manual.

Note.—Single copies of Safety Board reports are available without charge, as long as limited supplies last. Copies of Board recommendation letters, and responses or related correspondence, and press releases are also provided free of charge. All requests for copies must be in writing, identified by recommendation or report number. Address requests to: Public Inquiries Section, National Transportation Safety Board, Washington, D.C. 20594.

Multiple copies of Safety Board reports may be purchased from the National Technical Information Service, U.S. Department of Commerce, Springfield, Va. 22161.

(49 U.S.C. 1903(a)(2), 1906)

Margaret L. Fisher,

Federal Register Liaison Officer.

June 30, 1980.

[FR Doc. 80-20079 Filed 7-2-80; 8:45 am]

BILLING CODE 4910-58-M

NUCLEAR REGULATORY COMMISSION

Draft Regulatory Guide; Issuance and Availability

The Nuclear Regulatory Commission has issued for public comment a draft of a proposed revision to a guide in its Regulatory Guide Series together with a draft of the associated value/impact statement. This series has been developed to describe and make available to the public methods acceptable to the NRC staff of implementing specific parts of the Commission's regulations and, in some cases, to delineate techniques used by the staff in evaluating specific problems or postulated accidents and to provide guidance to applicants concerning certain of the information needed by the staff in its review of applications for permits and licenses.

The draft temporarily identified by its task number, TP 602-4 (which should be mentioned in all correspondence concerning this draft guide), is proposed Revision 1 to Regulatory Guide 10.6 and is entitled "Guide for the Preparation of Applications for Use of Sealed Sources and Devices for Performing Industrial Radiography." The guide is being developed to describe the type of information the NRC staff needs to evaluate an application for a license to possess and use sealed sources and devices containing byproduct materials for performing industrial radiography.

This draft guide and the associated value/impact statement are being issued to involve the public in the early stages of the development of a regulatory position in this area. They have not received complete staff review and do not represent an official NRC staff position.

Public comments are being solicited on both drafts, the guide (including any implentation schedule) and the draft value/impact statement. Comments on the draft value/impact statement should be accompanied by supporting data. Comments on both drafts should be sent to the Secretary of the Commission, U.S. Nuclear Regulatory Commission, Washington, D.C. 20555, Attention: Docketing and Service Branch, by August 29, 1980.

Although a time limit is given for comments on these drafts, comments and suggestions in connection with (1) items for inclusion in guides currently being developed or (2) improvements in all published guides are encouraged at any time.

Regulatory guides are available for inspection at the Commission's Public Document Room 1717 H Street NW., Washington, D.C. Requests for single copies of draft guides (which may be reproduced) or for placement on an automatic distribution list for single copies of future draft guides in specific divisions should be made in writing to the U.S. Nuclear Regulatory Commission, Washington, D.C. 20555, Attention: Director, Division of Technical Information and Document Control. Telephone requests cannot be accommodated. Regulatory guides are not copyrighted, and Commission approval is not required to reproduce them.

(5 U.S.C. 552(a))

Dated at Rockville, Maryland this 25th day of June 1980.

For the Nuclear Regulatory Commission.

Guy A. Arlotto,

Director, Division of Engineering Standards, Office of Standards Development.

[FR Doc. 80-20003 Filed 7-2-80; 8:45 am]

BILLING CODE 7590-01-M

International Atomic Energy Agency Draft Safety Guide; Availability of Draft for Public Comment

The International Atomic Energy Agency (IAEA) is developing a limited number of internationally acceptable codes of practice and safety guides for nuclear power plants. These codes and guides will be developed in the following five areas: Government Organization, Siting, Design, Operation, and quality Assurance. The purpose of these codes and guides is to provide IAEA guidance to countries beginning nuclear power programs.

The IAEA codes of practice and safety guides are developed in the following way. The IAEA receives and collates relevant existing information used by member countries. Using this collation as a starting point, an IAEA working group of a few experts then develops a preliminary draft. This preliminary draft is reviewed and modified by the IAEA Technical Review Committee to the extent necessary to develop a draft acceptable to them. This draft code of practice or safety guide is then sent to the IAEA Senior Advisory

Group which reviews and modifies the draft as necessary to reach agreement on the draft and then forwards it to the IAEA Secretariat to obtain comments from the Member States. The Senior Advisory Group then considers the Member State comments, again modifies the draft as necessary to reach agreement and forwards it to the IAEA Director General with a recommendation that it be accepted.

As part of this program, Safety Guide SG-09, "Management of Nuclear Power Plants for Safe Operation," has been devleoped. An IAEA working group, consisting of Mr. H. Simons of the United Kingdom; Mr. J. Burtheret of France; and Mr. A. Higashi of Japan, developed the initial draft of this Safety Guide from an IAEA collation during a meeting on March 24–April 3, 1980. The initial draft was reviewed and modified by a second Working Group, consisting of Mr. A. Higashi of Japan; Mr. W. Hoffman of the Federal Republic of Germany; and Mr. G. V. Nadkarni of India, during a meeting on June 2–6, 1980, and we are soliciting public comment on it. Comments on this draft received by August 4, 1980, will be useful to the U.S. representatives to the Technical Review Committee and Senior Advisory Group in evaluating its adequacy prior to the next IAEA discussion.

Single copies of this draft may be obtained by a written request to the Director, Office of Standards Development, U.S. Nuclear Regulatory Commission, Washington, D.C. 20555.

(5 U.S.C. 522(a))

Dated at Rockville, Md., this 25th day of June 1980.

For the Nuclear Regulatory Commission.

Robert B. Minogue,

Director, Office of Standards Development.

[FR Doc. 80-20004 Filed 7-2-80; 8:45 am]

BILLING CODE 7590-01-M

Topical Report; Issuance and Availability

The Nuclear Regulatory Commission has released two topical reports: NUREG/CR-1389, "Estimating Water Equivalent Snow Depth from Related Meteorological Variables," and NUREG/CR-1390, "Probability Estimates of Temperature Extremes for the Contigous United States." These reports, prepared for the NRC by the National Climatic Center, National Oceanic and Atmospheric Administration, provide information on the probability of occurrence of extreme snowfalls in terms of the weight of the snow and on the probability of occurrence of extreme maximum and minimum air temperatures. The data are presented in the context of determining appropriate snow load and temperature values for use in the design of structures, components, and systems of nuclear power plants against severe natural phenomena.These reports represent a significant improvement over the information currently available on the probability of occurrence and return intervals for snow load and temperature extremes. They should also be useful to architectural and engineering interests outside the nuclear industry.

These reports are available for inspection or copying for a fee at the NRC Public Document Room, 1717 H Street, NW., Washington, D.C. NUREG/CR-1389 may be purchased for $3.25 and NUREG/CR-1390 may be purchased for $3.75 directly from NRC by sending check or money order, payable to the Superintendent of Documents, to the Director, Division of Technical Information and Document Control, U.S. Nuclear Regulatory Commission, Washington, D.C. 20555. GPO Deposit Account holders may charge their order by calling (301) 492-9530. Copies are also available for purchase through the National Technical Information Service, Springfield, Va. 22161.

(5 U.S.C. 552(a))

Dated Rockville, Maryland this 23rd day of June 1980.

For the Nuclear Regulatory Commission.

Ray G. Smith,

Acting Director, Office of Standards Development.

[FR Doc. 80-20002 Filed 7-2-80; 8:45 am]

BILLING CODE 7590-01-M

[Docket No. 50-261]

Carolina Power & Light Co.; Issuance of Amendment to Facility Operating License

The U.S. Nuclear Regulatory Commission (the Commission) has issued Amendment No. 47 to Facility Operating License No. DPR-23, issued to Carolina Power and Light Company, which revised Technical Specifications for operation of the H. B. Robinson Unit No. 2 (the facility) located in Darlington County, South Carolina. The amendment is effective as of its date of issuance.

The amendment consists of a change to the Technical Specifications which clarifies a note on Table 3.5-3. The note allows blockage of channels ("High Differential Pressure Between any Steamline and the Steamline Header" and "Pressurizer Low Pressure and Low Level") when the Reactor Coolant System pressure is less than 2000 psig.

The application for the amendment complies with the standards and requirements of the Atomic Energy Act of 1954, as amended (the Act), and the Commission's rules and regulations. The Commission has made appropriate findings as required by the Act and the Commission's rules and regulations in 10 CFR Chapter I, which are set forth in the license amendment. Prior public notice of this amendment was not required since the amendment does not involve a significant hazards consideration.

The Commission has determined that the issuance of this amendment will not result in any significant environmental impact and that purusant to 10 CFR § 51.5(d)(4) an environmental impact statement, or negative declaration and environmental impact appraisal need not be prepared in connection with the issuance of this amendment.

For further details with respect to this action, see (1) the application for amendment dated March 6, 1979, (2) Amendment No. 47 to License No. DPR-23, and (3) the Commission's related Safety Evaluation. All of these items are available for public inspection at the Commission's Public Document Room, 1717 H Street, N.W., Washington, D.C. and at the Hartsville Memorial Library, Home and Fifth Avenues, Hartsville, South Carolina 29550. A copy of items (2) and (3) may be obtained upon request addressed to the U.S. Nuclear Regulatory Commission, Washington, D.C. 20555, Attention: Director, Division of Licensing.

Dated at Bethesda, Maryland, this 12th day of June, 1980.

For the Nuclear Regulatory Commission.

Steven A. Varga,

Chief, Operating Reactors Branch No. 1, Division of Licensing.

[FR Doc. 80-19988 Filed 7-2-80; 8:45 am]

BILLING CODE 7590-01-M

[License No. 12-00534-04]

Columbus-Cuneo-Cabrini Medical Center; Modification of May 7, 1980, Order

I

Columbus-Cuneo-Cabrini Medical Center is the holder of NRC License No. 12-00534-04 which authorizes operation of a cobalt-60 teletherapy unit.

II

Recently, the NRC became aware of a number of teletherapy equipment malfunctions which included faulty shutter operation and improper indication of beam status. These types of malfunctions have the potential for causing excessive (even lethal) radiation

exposures of operating personnel and patients if not promptly detected and appropriately rectified.

These malfunctions are being investigated and corrective action is being pursued with the teletherapy manufacturers and users involved. In addition to these measures, however, it was determined that a teletherapy room radiation monitor would provide the capability to promptly detect and alert teletherapy unit operators of situations where the source is not fully shielded so that appropriate emergency action can be taken to avoid excessive radiation exposure. The room radiation monitor is intended to provide the teletherapy operator with continuous information on beam status. These room radiation monitors would be an additional requirement to the required door interlock system.

III

On May 7, 1980, an Order was issued to the Licensee (and to all other teletherapy licensees) requiring installation of a permanently mounted radiation monitor which continuously monitors the teletherapy beam condition, is equipped with a back-up battery power supply and has a visual signal to make the operator continuously aware of the beam condition.

By letter dated May 16, 1980, the Licensee responded to the Order, describing its existing AC powered audible radiation monitor which is interlocked to the control panel and requesting the Commission to modify the Order to permit continued operation of its existing monitoring system. Based on a review of the facts submitted by the Licensee, *i.e.*, the teletherapy unit has a low usage rate of approximately seven (7) times per year, the teletherapy room is equipped with an A.C. operated monitor which provides continuous beam status information to the operator by means of an audible signal and licensee personnel will use a portable survey meter to monitor beam condition if the room monitor becomes inoperable, I have determined that the public health, safety and interest will not be endangered by modification of this license.

IV

Accordingly, pursuant to the Atomic Energy Act of 1954, as amended, and the Commission's regulations in 10 CFR Parts 2, 30, 35, It Is Hereby Ordered That the May 7, 1980 Order Modifying License No. 12-00534-04 be amended to delete condition 1 of Section II of that Order and replace such condition with the following condition.

(1) As soon as possible, but no later than 90 days from May 7, 1980, each teletherapy room shall be equipped with a radiation monitoring device which continuously monitors the teletherapy beam condition. Whenever this monitor is non-operational, due to power failure, the operator or other qualified individual shall immediately determine the beam condition with an operable, calibrated survey meter. The monitoring device shall energize a visible or audible signal to make the operator continuously aware of teletherapy beam condition in order that appropriate emergency procedures may be instituted to prevent unnecessary radiation exposure. Operating procedures shall be modified to require daily operational testing of the installed radiation monitor on each day the teletherapy unit is in use.

All other conditions of the May 7, 1980 Order Modifying License remain in effect in accordance with their terms.

V

The Licensee or any person who has interest affected by this Order may within twenty (20) days of the date of this Order file a request for a hearing with respect to all or any part of the amendment. Any request for a hearing shall be filed with Mr. R. E. Cunningham, Director, Division of Fuel Cycle and Material Safety, U.S. Nuclear Regulatory Commission, Washington, D.C. 20555, with a copy to the Executive Legal Director at the above address. This amendment will become effective on the expiration of the period during which the Licensee may request a hearing, or in the event a hearing is requested, on the date specified in an order made following the hearing.

VI

In the event a person who has an interest affected by this Order requests a hearing as provided above and a hearing is held, the issues to be considered at such a hearing shall be:

(1) Whether the circumstances described in Section II and III of this Order provide an adequate basis for the actions ordered; and

(2) Whether the license should be modified to require the installation of a radiation monitoring device in each teletherapy room or use of a substitute measure as set forth in Part IV of this Order.

Dated at Bethesda, Maryland this 19th day of June, 1980.

For the Nuclear Regulatory Commission.

Richard E. Cunningham,

Director, Division of Fuel Cycle and Material Safety, Office of Nuclear Material Safety and Safeguards.

[FR Doc. 80-19989 Filed 7-2-80; 8:45 am]

BILLING CODE 7590-01-M

[Docket No. 50-254]

Commonwealth Edison Co. and Iowa-Illinois Gas & Electric Co.; Issuance of Admendment to Facility Operating License

The U.S. Nuclear Regulatory Commission (the Commission) has issued Amendment No. 56 to Facility Operating License No. DRP-29, issued to Commonwealth Edison Company (acting for itself and on behalf of the Iowa-Illinois Gas and Electric Company), which revised the license for operation of the Quad Cities Nuclear Power Station Unit No. 1 (the facility) located in Rock Island County, Illinois. The amendment is effective as of its date of issuance.

The amendment authorizes operation of the reactor beyond the previously analyzed end-of-cycle coastdown conditions and is based upon analyses performed and accepted for like cores.

The application for the amendment complies with the standards and requirements of the Atomic Energy Act of 1954, as amended (the Act), and the Commission's rules and regulations. The Commission has made appropriate findings as required by the Act and the Commission's rules and regulations in 10 CFR Chapter I, which are set forth in the license amendment. Prior public notice of this amendment was not required since the amendment does not involve a significant hazards consideration.

The Commission has determined that the issuance of this amendment will not result in any significant environmental impact and that pursuant to 10 CFR § 51.5(d)(4) an environmental impact statement or negative declaration and environmental impact appraisal need not be prepared in connection with issuance of this amendment.

For further details with respect to this action see (1) the application for amendment dated June 6, 1980, (2) Amendment No. 56 to License No. DPR-29, and (3) the Commission's related Safety Evaluation. All of these items are available for public inspection at the Commission's Public Document Room, 1717 H Street, N.W., Washington, D.C., and at the Moline Public Library, 504 17th Street, Moline, Illinois 61265. A copy of items (2) and (3) may be obtained upon request addressed to the U.S. Nuclear Regulatory Commission,

Washington, D.C. 20555, Attention: Director, Division of Licensing.

Dated at Bethesda, Maryland, this 26th day of June 1980.

For the Nuclear Regulatory Commission.

Thomas A. Ippolito,

Chief, Operating Reactors Branch No. 2, Division of Licensing.

[FR Doc. 80-19990 Filed 7-2-80; 8:45 am]

BILLING CODE 7590-01-M

[Docket No. 50-302]

Florida Power Corp., et al.; Issuance of Amendment to Facility Operating License

The U.S. Nuclear Regulatory Commission (the Commission) has issued Amendment No. 31 to Facility Operating License No. DPR-72, issued to the Florida Power Corporation, City of Alachua, City of Bushnell, City of Gainesville, City of Kissimmee, City of Leesburg, City of New Smyrna Beach and Utilities Commission, City of New Smyrna Beach, City of Ocala, Orlando Utilities Commission and City of Orlando, Sebring Utilities Commission, Seminole Electric Cooperative, Inc., and the City of Tallahassee (the licensees) which revised the Technical Specifications for operation for the Crystal River Unit No. 3 Nuclear Generating Plant (the facility) located in Citrus County, Florida. The amendment is effective as of the date of issuance.

The amendment revises Technical Specification 4.6.1.6.2 to delete requirements for maintaining a containment test pressure when inspecting tendon end anchorages.

The application for the amendment complies with the standards and requirements of the Atomic Energy Act of 1954, as amended (the Act), and the Commission's rules and regulations. The Commission has made appropriate findings as required by the Act and the Commission's rules and regulations in 10 CFR Chapter I, which are set forth in the license amendment. Prior public notice of this amendment was not required since the amendment does not involve a significant hazards consideration.

The Commission has determined that the issuance of this amendment will not result in any significant environmental impact and that pursuant to 10 CFR § 51.5(d)(4) an environmental impact statement, negative declaration or environmental impact appraisal need not be prepared in connection with issuance of this amendment.

For further details with respect to this action, see (1) the application for amendment dated November 21, 1977, as revised and supplemented February 15, 1980, and May 14, 1980, (2) Amendment No. 31 to License No. DPR-72, and (3) the Commission's related Safety Evaluation. All of these items are available for public inspection at the Commission's Public Document Room, 1717 H Street, N.W., Washington, D.C. and at the Crystal River Public Library, Crystal River, Florida. A copy of items (2) and (3) may be obtained upon request addressed to the U.S. Nuclear Regulatory Commission, Washington, D.C. 20555, Attention: Director, Division of Licensing.

Dated at Bethesda, Maryland, this 18th day of June 1980.

For the Nuclear Regulatory Commission.

Robert W. Reid,

Chief, Operating Reactors Branch No. 4, Division of Licensing.

[FR Doc. 80-19992 Filed 7-2-80; 8:45 am]

BILLING CODE 7590-01-M

[Docket No. 50-320]

Metropolitan Edison Co., Jersey Central Power & Light Co., Pennsylvania Electric Co.; Issuance of Amendment to Facility Operating License

The U.S. Nuclear regulatory Commission (the Commission) ha issued Amendment No. 11 to Facility Operating License No. DPR-73, issued to Metropolitan Edison Company, Jersey Central Power and Light Company, and Pennsylvania Electric Company with revised Technical Specifications for operation of the Three Mile Island Nuclear Station, Unit 2 (the facility) located in Dauphin County, Pennsylania. The amendment is effective as of its date of issuance.

The amendment permits bypassing the interrlocks from the Reactor Building Exhaust Monitors to Dampers during purging to the reactor building atmosphere pursuant to the Commission's Order for Temporary Mofification of License dated June 12, 1980, in order to permit the purging operation to be conducted in accordance with the Commission's Memorandum and Order of June 12, 1980, and the Order for Temporary Modification of License of that date.

The application for the amendment complies with the standards and requirements of the Atomic energy Act of 1954, as amended (the Act), and the Commission's rules and regulations. The Commission has made appropriate findings as required by the Act and the Commission's rules and regulations in 10 CFR Chapter I, which are set forth in the license amendment. Prior public notice of this amendment was not required since the amendment does not involve a significant hazards consideration.

The commission has determined that the issuance of this amendment will not result in any significant environmental impact and that pursuant to 10 CFR § 51.5(d)(4) an environmental impact statement, or negative declaration and environmental impact appraisal need not be prepared in connection with issuance of this amendment.

For further details with respect to this action, see (1) the application for amendment dated June 23, 1980, (2) Amendment No. 11 to License No. DPR-73, and (3) the Commission's related Safety Evaluation. All of these items are available for public inspection at the Commission's Public Document room, 1717 H Street, N.W., Washington, D.C. 20555 and at the Government Publications Section, State Library of Pennsylvania, Education Building, Commonwealth and Walnut Streets, Harrisburg, Pennsylavania 17126 and the York College of Pennsylvania, Country Club Road, York, Pennsylvania 17405. A copy of items (2) and (3) may be obtained upon request addressed to the U.S. Nuclear Regualtory Commission, Washington, D.C. 20555, Attention: Director, TMI Program Office.

Dated at Bethesda, Maryland, this 24th day of June 1980.

For the Nuclear Regulatory Commission.

Bernard J. Snyder,

Program Director, Three Mile Island Program Office, Office of Nuclear Reactor Regulation.

[FR Doc. 80-19993 Filed 7-2-80; 8:45 am]

BILLING CODE 7590-01-M

[Docket No. 50-298]

Nebraska Public Power District; Issuance of Amendment to Facility Operating License

The U.S. Nuclear Regulatory Commission (the Commission) has issued Amendment No. 63 to facility Operating License No. DPR-46, issued to Nebraska Public Power District, which revised the Technical Specifications for operation of the Cooper Nuclear Station, located in Nemaha County, Nebraska. The amendment is effective as of the date of its issuance.

This amendment modifies Appendix B of the Technical Specifications to delete Section 2.1.1/3.1.1 regarding maximum ΔT across the condenser.

The application for the amendment complies with the standards and requirements of the Atomic Energy Act of 1954, as amended (the Act), and the Commission's rules and regulations. The Commission has made appropriate findings as required by the Act and the

Commission's rules and regulations in 10 CFR Chapter I, which are set forth in the license amendment. Prior public notice of this amendment was not required since the amendment does not involve a significant hazards consideration.

The Commission has determined that the issuance of this amendment is a ministerial action and an environmental impact statement, or negative declaration and environmental impact appraisal need not be prepared in connection with issuance of this amendment.

For further details with respect to this action, see (1) the application for amendment dated June 20, 1980, (2) Amendment No. 63 to License No. DPR-46, and (3) the Commission's letter to the licensee dated June 24, 1980. All of these items are available for public inspection at the Commission's Public Document Room, 1717 H Street, N.W., Washington, D.C. and at the Auburn Public Library, 118-15th Street, Auburn, Nebraska 67305. A copy of items (2) and (3) may be obtained upon request addressed to the U.S. Nuclear Regulatory Commssion, Washington, D. C. 20555, Attention: Director, Division of Licensing.

Dated at Bethesda, Maryland, this 24th day of June, 1980.

For the Nuclear Regulatory Commission.

Thomas A. Ippolito,

Chief, Operating Reactors Branch No. 2, Division of Licensing.

[FR Doc. 80-19994 Filed 7-2-80; 8:45 am]

BILLING CODE 7590-01-M

[Docket No. 70-143; SNM License No. 124]

Nuclear Fuel Services, Inc., Erwin, Tenn.; Hearing[1]

The Commission has granted a hearing in this matter in response to the February 6, 1980 request of Natural Resources Defense Council (NRDC), and has specified that such hearing will be legislative in nature. *See In the Matter of Nuclear Fuel Services, Inc.*, Docket No. 70-143, Order, June 26, 1980.

Issues

The issues to be decided in the hearing are:

(a) Whether the circumstances as described in the January 21, 1980 Order exist;

(b) Whether on the basis of those circumstances the amendment to NFS's license No. SNM-124 should be sustained; and

(c) Whether, if it is decided that the amendment should not be sustained, the NFS license should be revoked recognizing that the consequence of revocation may be operation of the NFS Erwin facility as an unlicensed activity.

Presiding Officer

The Commission itself will preside over the hearing and render the decision.

Procedures

The Commission has decided that the matter should be resolved on the basis of written presentations addressed to the Commission and an oral hearing at which the Commission will question the parties and hear argument. There shall be be no discovery or cross-examination; however, the Commission will entertain written suggestions from the parties for questions to be posed at the hearing. In preparing their presentations, the parties should consider the January 21, 1980 Order and NRDC's February 6, 1980 Request for a Hearing (unclassified version) as already part of the record.

Schedule

The following schedule will govern the hearing:

By September 1, 1980 each party should submit to the Commission and serve on all other parties [2] written testimony on the above issues, including any factual and legal arguments it may wish to make.

By September 15 each party may submit to the Commission and serve on all other parties written suggestions for questions that the Commission may pose to the parties in oral session.

Between October 15 and November 1, at a time to be announced by subsequent order, the Commission will preside over an oral session at which it will question the parties and hear oral argument. The subsequent order will detail the procedures, including time allotments, for the oral session.

Within 3 weeks from the date of the oral session, each party may submit to the Commission and serve on all other parties a final summary rebuttal and statement of position.

Parties

The parties to this hearing shall be the NRDC, the NRC Staff, and, if they request, NFS, Ms. Gwen McKinney, and the Departments of Defense and Energy.

Answer

The parties, as well as NFS, Ms. McKinney and the Departments of Defense and Energy, if they wish to be parties, shall file an answer to the Notice of Hearing by July 14, 1980. The answers should indicate whether the party plans to participate and the person upon whom service should be made.

It is so ordered.

For the Commission.

Dated at Washington, D.C. this 27th day of June, 1980.

Samuel J. Chilk,

Secretary of the Commission.

[FR Doc. 80-19987 Filed 7-2-80; 8:45 am]

BILLING CODE 7590-01-M

[1] This is a CORRECTED version of the Notice of Hearing. The incorrect version was never published in the Federal Register.

[2] The Commission will shortly provide all parties with a service list.

[Dockets Nos. 50-514, 50-515]

Portland General Electric Co., et al. (Pebble Springs Nuclear Plant, Units 1 and 2); Order Scheduling a Prehearing Conference

June 23, 1980.

There will be a prehearing conference commencing at 9:30 a.m. (local time) on July 23, 1980, in the ICC Courtroom, No. 103, Pioneer Courthouse, 55 Southwest Yamhill, Portland, Oregon. The purpose of the conference is to consider those issues appropriate for an early site suitability hearing.

On June 10, 1980, the NRC Staff requested additional time, until July 15, 1980, to respond to Forelaws on Board and Lloyd K. Marbet filing of May 27, 1980. For good cause stated, the Staff's request is granted.

It is so ordered.

For the Atomic Safety and Licensing Board.

Dated at Bethesda, Maryland this 23rd day of June 1980.

Elizabeth S. Bowers,

Chairman.

[FR Doc. 80-19995 Filed 7-2-80; 8:45 am]

BILLING CODE 7590-01-M

[Docket No. 50-286]

Power Authority of the State of New York; Issuance of Amendment to Facility Operating License

The U.S. Nuclear Regulatory Commission (the Commission) has issued Amendment No. 30 to Facility Operating License No. DPR-64, issued to the Power Authority of the State of New York (the licensee), which revised Technical Specifications for operation of the Indian Point Nuclear Generating Unit No. 3 (the facility) located in Buchanan, Westchester County, New York. The amendment is effective as of the date of issuance.

The amendment changes the Technical Specifications by adding surveillance requirements for the containment vent and purge system and by adding precautions for the control of

heavy loads over the reactor when the vessel head is removed.

The application for the amendment complies with the standards and requirements of the Atomic Energy Act of 1954, as amended (the Act), and the Commission's rules and regulations. The Commission has made appropriate findings as required by the Act and the Commission's rules and regulations in 10 CFR Chapter I, which are set forth in the license amendment. Prior public notice of this amendment was not required since the amendment does not involve a significant hazards consideration.

The Commission has determined that the issuance of this amendment will not result in any significant environmental impact and that pursuant to 10 CFR § 51.5(d)(4) an environmental impact statement or negative declaration and environmental impact appraisal need not be prepared in connection with issuance of this amendment.

For further details with respect to this action, see (1) the application for amendment dated May 6, 1980, (2) Amendment No. 30 to License No. DPR-64, and (3) the Commission's related Safety Evaluation. All of these items are available for public inspection at the Commission's Public Document Room, 1717 H Street, N.W., Washington, D.C. and at the White Plains Public Library, 100 Martine Avenue, White Plains, New York. A copy of items (2) and (3) may be obtained upon request addressed to the U.S. Nuclear Regulatory Commission, Washington, D.C. 20555, Attention: Director, Division of Licensing.

Dated at Bethesda, Maryland, this 13th day of June, 1980.

For the Nuclear Regulatory Commission.

Steven A. Varga,

Chief, Operating Reactors Branch #1, Division of Licensing.

[FR Doc. 80-19996 Filed 7-2-80; 8:45 am]

BILLING CODE 7590-01-M

[Docket Nos. 50-361 OL, 50-362 OL]

Southern California Edison Co., et al. (San Onofre Nuclear Generating Station, Units 2 and 3); Order for Prehearing Conference

The Atomic Safety and Licensing Board will conduct a prehearing conference pursuant to 10 CFR 2.751a(4)(b) and 2.718(h) beginning at 9 a.m., July 17, 1980 in Courtroom Number 7, U.S. District Court, 940 Front Street, San Diego, California 92189. The purpose of the prehearing conference is to consider the further identification of issues, and the need for further actions in this proceeding. All parties or their respective counsel are directed to attend the prehearing conference. Parties may serve recommendations for agenda items to be considered at the prehearing conference on or before July 7, 1980.

The public is invited to attend the prehearing conference, but there will be no opportunity for public participation.

The Atomic Safety and Licensing Board.

Bethesda, Maryland, June 24, 1980.

Ivan W. Smith,

Chairman.

[FR Doc. 80-19997 Filed 7-2-80; 8:45 am]

BILLING CODE 7590-01-M

[Docket No. 50-327]

Tennessee Valley Authority (Sequoyah Nuclear Plant); Request for Action Under 10 CFR 2.206

Notice is hereby given that by petition dated May 28, 1980, "The Nuclear Regulatory Commission" (TNRC), a five-member musical group located in Summertown, Tennessee, requested that the low power operating license authorizing limited operation of its Sequoyah commercial nuclear power plant be revoked. The basis of the request is an allegation that the containment of the facility would not withstand pressures resulting from hydrogen explosions such as the one which occurred at TMI-2. This petition is being treated as a request for action under 10 CFR 2.206 of the Commission's regulations, and accordingly, action will be taken on the petition within a reasonable time.

Copies of the petition are available for inspection in the Commission's Public Document Room at 1717 H Street, NW., Washington, D.C. 20555 and in the local public document room at the Chattanooga-Hamilton County Bicentennial Library, 1001 Broad Street, Chattanooga, Tennessee 37402.

For the Nuclear Regulatory Commission.

Dated at Bethesda, Maryland this 24th day of June, 1980.

Harold R. Denton,

Director, Office of Nuclear Reactor Regulation.

FR Doc. 80-19998 Filed 7-2-80; 8:45 am]

BILLING CODE 7590-01-Med

[Byproduct Material License No. 12-00509-03 EA-80-06]

The University of Chicago, 5801 Ellis Avenue, Chicago, Ill. 60637; Order Imposing Civil Monetary Penalties

I

The University of Chicago, Chicago, Illinois (the "licensee") is the holder of Byproduct Material License No. 12-00509-03 (the "licensee") issued by the Nuclear Regulatory Commission ("the Commission") which authorizes the licensee to perform research and development activities using various kinds and quantities of byproduct material in accordance with the conditions specified therein. The license was issued on July 3, 1958, and has a termination date of June 30, 1984.

II

Based on a reported overexposure to the University researcher, a special investigation was conducted of licensed activities under this license during the period October 16 through November 1, 1979. As a result of this investigation it appears that the licensee has not conducted its activities in full compliance with the conditions of the license and with the requirements of the Nuclear Regulatory Commission's "Standards for Protection Against Radiation," Part 20, Title 10, Code of Federal Regulations. A written Notice of Violation was served upon the licensee by letter dated March 3, 1980, specifying the items of noncompliance in accordance with 10 CFR 2.201. A Notice of Proposed Imposition of Civil Penalties was served concurrently upon the licensee in accordance with Section 234 of the Atomic Energy Act of 1954, as amended (42 U.S.C. 2282) and 10 CFR 2.205, incorporating by reference the Notice of Violation which stated the nature of the items of noncompliance, and the provisions of the NRC regulations and license conditions with which the licensee was in noncompliance. An answer from the licensee to the Notice of Violation was dated March 21, 1980 and an answer to the Notice of Proposed Imposition of Civil Penalties was dated March 24, 1980.

III

Upon consideration of the answers received and the statements of fact, explanation, and argument for deferral, compromise, mitigation, or cancellation contained therein, as set forth in Appendix A to this Order, the Director of the Office of Inspection and Enforcement has determined that the penalties proposed for the items of noncompliance designated in the Notice of Violation should be imposed except for Item 3, which is withdrawn.

IV

In view of the foregoing and pursuant to Section 234 of the Atomic Energy Act of 1954, as amended, (42 U.S.C. 2282), and 10 CFR 2.205, It Is Hereby Ordered That:

The licensee pay civil penalties in the total amount of Two Thousand One Hundred Dollars within twenty-five days of the date of this Order, by check, draft, or money order payable to the Treasurer of the United States and mailed to the Director of the Office of Inspection and Enforcement.

V

The licensee may, within twenty-five days of the date of this Order, request a hearing. If a hearing is requested, the Commission will issue an order designating the time and place of hearing. Upon failure of the licensee to request a hearing within twenty-five days of the date of this Order, the provisions of this Order shall be effective without further proceedings and, if payment has not been made by that time, the matter may be referred to the Attorney General for collection.

VI

In the event the licensee requests a hearing as provided above, the issues to be considered at such a hearing shall be:

a. whether the licensee was in noncompliance with the Commission's regulations and the conditions of the licensee as set forth in the Notice of Violation referenced in Section II and III above; and,

b. whether on the basis of such items of noncompliance, this Order should be sustained.

Dated at Bethesda, Maryland this 25th day of June 1980.

For the Nuclear Regulatory Commission.

Victor Stello, Jr.,

Director, Office of Inspection and Enforcement.

Appendix A—Evaluations and Conclusions

For each item of noncompliance and associated civil penalty identified in the Notice of Violation (dated March 3, 1980), the original item of noncompliance is restated and the Office of Inspection and Enforcement's evaluation and conclusion regarding the licensee's responses to each item (dated March 21 and March 24, 1980) is presented.

Statement of Noncompliance

1. 10 CFR 20.101(a) requires that licensees possess and use licensed material in such a manner that individuals will not receive a whole body exposure in excess of 1.25 rems, nor an extremity exposure in excess of 18.75 rems during one calendar quarter.

Contrary to the above, an individual received a whole body exposure of approximately 14.3 rems during the third calendar quarter of 1979. Additionally, the same individual received an estimated 45 rem extremity (hand) exposure during the same calendar quarter.

This violation constituted an occurrence related to health and safety. (Civil Penalty—$1,000)

Evaluation of Licensee Response

The licensee has admitted the overexposure, but requests the penalty be remitted or mitigated. The basis for the request is that the individual involved assessed the anticipated radiation levels. The assessment was erroneous due to an underestimation of the levels caused by bringing individual sources together in an array and of the time necessary to conduct the experiment. This information does not dispute or alter the facts upon which the proposed penalty is based. Also, contrary to arguments advanced by the licensee, the civil penalty value is not based on contamination of the environment or on the medical significance of exposure to the individual.

Conclusion

The item as stated is an item of noncompliance. The information presented by the licensee does not provide a basis for modification of this enforcement action.

Statement of Noncompliance

2. 10 CFR 20.201(b) requires licensees to perform surveys (evaluations) as may be necessary to comply with the regulations in this part.

One of the regulations, 10 CFR 20.101(a), sets forth the whole body and extremity exposure limits.

Contrary to the above, the licensee failed to conduct an adequate evaluation of the radiation levels which caused the individual to receive the excessive whole body and extremity exposure in the third calendar quarter of 1979, in that (1) licensee was aware on September 10, 1979, that an individual had exceeded the quarterly exposure limit but did not restrict the individual from continuing to perform activities which resulted in additional exposure and (2) the licensee had not considered the potential extremity exposure involved in conducting a new experiment during the period August 20 through September 13, 1979.

This violation contributed to an occurrence related to health and safety. (Civil Penalty—$500)

Evaluation of Licensee Response

2. The licensee denies this item on the basis that the researcher performed a survey of radiation levels, but he miscalculated the intensity and probable time periods of exposure. There was no evidence that the researcher had performed any calculations or other evaluations to translate the radiation level readings into possible exposure which may occur during the experiment. It was also determined during our investigation that no evaluation was made of the probable exposure to the extremities (hands) prior to the conduct of the experiment. We do not agree that the researcher's evaluation would necessarily have included the extremity exposure as there is no evidence that from beginning of the experiment up to the first day of our investigation, October 16, 1979, anyone at the University had given any consideration to evaluating the extremity exposure received. The University's written report dated October 29, 1979, does not address the question of extremity exposure. Also, no surveys (evaluations) were performed by the Radiation Protection Office or anyone else with radiation protection responsibility. Rather, it was left to the researcher to evaluate the hazard himself.

Regarding the failure to restrict the individual after his overexposure was known, it appears the attempts to notify him were ineffectual. Since the researcher continued working on his experiment during the September 10–13 period, it would appear he could have been contacted at the laboratory where he was working or a notification could have been placed there that the experiment should not proceed before contacting the Radiation Protection Office. Further, his work with radioactive material was discontinued on September 13, not because of radiation exposure, but because the experiment was completed. The researcher was not formally restricted from radiation work until an October 1 discussion between him and the Radiation Protection Officer which was confirmed by memorandum dated October 4.

Conclusion

The item as stated is an item of noncompliance. The information presented by the licensee does not provide a basis for modification of this enforcement action.

Statement of Noncompliance

3. 10 CFR 20.403(b) requires licensees to notify within 24 hours by telephone and telegraph the appropriate NRC Regional Office of any incident involving licensed material which may have caused an exposure of the whole body of any individual to 5 rems or more of radiation.

10 CFR 20.405(a) required that, in addition to any notification required by 20.403, licensees shall report in writing within 30 days to the NRC each exposure of an individual to radiation in excess of the applicable limits in 20.101.

Contrary to the above, the licensee possessed information on September 10, 1979, that an individual had received a total of 5.14 rems of exposure to the whole body during the third calendar quarter and on September 27, 1979, possessed information that the same individual's total whole body exposure during that calendar quarter was 8.79 rems as indicated by film badge records with no correction factors for the neutrons applied, but did not notify by telephone and telegraph the NRC Region III Office until October 2, 1979. Also, for the same individual that had received the exposure in excess of the limit in 20.101(a), the licensee's report in writing was submitted by letter dated October 29, 1979, a period in excess of 30 days.

This is an infraction. (Civil Penalty—$300)

Evaluation of Licensee Response

The licensee denies this item on the basis that it was not certain the exposure limits had been exceeded until October 2, 1979. According to the licensee, it had received two readings from the neutron film badge due to the use of two types of detection material. One reading indicated negligible exposure. That reading was from the detection material in regular use by the licensee. The higher reading was detected on new experimental material. Therefore, it was not unreasonable under the circumstances to verify the exposure prior to notifying the NRC. Upon a recheck by the film badge processor, the higher reading was verified, and the NRC notified within the 24 hour and 30 day day time limits.

Since the need to notify the NRC of potential overexposures, whether verified or not, may not be clear from the regulations, the licensee has responded adequately to this item. However, although not mentioned in the item, the gamma exposure recorded on the same film badge exceeded the quarterly limits. This was not reported, apparently due to inadequate tracking of quarterly exposures. This area will be emphasized in future inspections.

Conclusion

The licensee's response forms a basis for remitting the civil penalty. Accordingly this item is withdrawn.

Statement of Noncompliance

4. Licensee Condition 22 requires the licensee to possess and use licensed material in accordance with statements made in an application dated June 27, 1978. Schedule E—Part 1, Summary of Radioisotope Procedures, of this application states: "The University Radiation Protection Officer evaluates and distributes new applications, with comments and recommendations, to the members of the University Committee on Radiation Hazards for approval."

Contrary to the above, Application No. 1250, dated October 24, 1978, to acquire and use four californium-252 sealed sources of 10 micrograms each, was not distributed to members of the Radiation Hazards Committee for approval.

This is an infraction. (Civil Penalty—$300)

Evaluation of Licensee Response

4. The licensee denies this item on the basis that the application, identified as No. 1250, was not a "new" application. However, the only other application relating to the use of californium-252 sealed sources was No. 78, dated November 18, 1970. In item 16 of the 1970 application form itself, the following statement appears: "Approval resulting from this application will expire not later than last day of current year."

When an approval of an application expires, it follows that a new application must be approved. It appears that any work involving californium-252 was not conducted under an approved application since December 31, 1970.

Conclusion

The item as stated is an item of noncompliance. The information presented by the licensee does not provide a basis for modification of this enforcement action.

Statement of Noncompliance

5. License Condition 22 of NRC License No. 12-00509-03, requires the licensee to possess and use licensed material in accordance with statements made in a letter dated March 8, 1979. Paragraph 9 of the March 8, 1979 letter states: "Survey instruments are returned at least annually to Radiation Protection Service Laboratory for recalibration."

Contrary to the above, as of October 26, 1979, an Eberline PNC-4 survey instrument used in Laboratory AJC-059 had not been calibrated since 1975.

This is an infraction. (Civil Penalty—$300)

Evaluation of Licensee Response

5. The licensee admits that the reclaibration of the survey instrument was not performed as required, but contends that the failure to calibrate the instrument did not contribute to the overexposure, since when checked, the instrument was found to be properly calibrated. However, it is an unacceptable practice to use a radiation survey instrument which had not been calibrated for this extended period of time.

Conclusion

The item as stated is an item of noncompliance. The information presented by the licensee does not provide a basis for modification of this enforcement action.

[FR Doc. 80-19999 Filed 7-2-80; 8:45 am]
BILLING CODE 7590-01-M

[Dockets Nos. 50-280, 50-281, 50-338, 50-339]

Virginia Electric & Power Co. (Surry Power Station Units 1 and 2; North Anna Station, Units 1 and 2); Issuance of Director's Decision Under 10 CFR 2.206

By letter dated February 18, February 22, February 28, April 25, and May 25, 1980, Mrs. June Allen, on behalf of the North Anna Environmental Coalition (NAEC) requested that the Commission take various actions concerning the Surry and North Anna Power Stations.

Upon review of the material submitted by Mrs. Allen, and upon consideration of other relevant information, I have determined not to take the actions requested. Accordingly, the requests of Mrs. Allen are denied. A copy of the decision in this matter is available for inspection in the Commission's Public Document Room, 1717 H Street, NW., Washington, D.C. 20555, and in the local public document rooms for the Surry Power Station located at Swem Library, College of William and Mary, Williamsburg, Virginia 23185 and for the North Anna Power Station located at the Board of Supervisors Office, Louisa County Courthouse, Louisa, Virginia 23093 and at the Alderman Library, Manuscripts Department, University of Virginia, Charlottesville, Virginia 22901. A copy of this decision will also be filed with the Secretary for the Commission's review in accordance with 10 CFR 2.206(c) of the Commission's regulations.

As provided in 10 CFR 2.206(c), this decision will constitute the final action of the Commission 20 days after the date of issuance of the decision, unless the Commission on its own motion institutes a review of this decision within that time.

Dated at Bethesda, Maryland, this 20th day of June 1980.

For the Nuclear Regulatory Commission.

Harold R. Denton,

Director, Office of Nuclear Reactor Regulation.

FR Doc. 80-20000 Filed 7-2-80; 8:45 am]

BILLING CODE 7590-01-M

[Docket No. 50-266 CO (Modification of License)]

Wisconsin Electric Power Co. (Point Beach Nuclear Plant, Unit 1); Order Setting First Prehearing Conference

On November 30, 1979, the Director of the Office of Nuclear Reactor Regulation issued a Confirmatory Order amending "Facility Operating License No. DPR-24" which authorized Wisconsin Electric Power Company (the Licensee) to operate Point Beach Nuclear Plant, Unit 1 (the facility), by placing certain limiting conditions on the operation of the facility. 44 FR 70608 (December 7, 1979). The Order indicated that these additional operating conditions were required to assure the safe operation of the facility because of a finding of extensive general intergranular attack and caustic stress corrosion cracking on certain of the external surfaces of the steam generator tubes. It permitted any person whose interest might be affected by the Order to request, within 20 days, a hearing limited to the issues of whether the facts stated in Sections II and III of the Order (relating to the necessity for the additional operating conditions, the imposition of the additional operating conditions, and Licensee's agreement to these additional conditions) were correct, and whether the Order should be sustained. By letter dated December 17, 1979, Wisconsin's Environmental Decade, Inc. ("Decade") requested a hearing. The request was one in a series of filings, meetings, Commission briefings and orders related to the question of steam generator tube integrity at Point Beach. The Licensee filed a response in opposition to the request for hearing on December 27, 1979.

Subsequently, on January 3, 1980, the Director of Nuclear Reactor Regulation issued an Order modifying the Confirmatory Order of November 30, 1979, by imposing additional limiting conditions reducing the primary pressure in the steam generators. 45 FR 2452 (January 11, 1980). On February 11, 1980, the Staff filed a motion to deny Decade's request for a hearing.

By Order dated May 12, 1980, the Commission ruled on Decade's request for a hearing on the two orders. It directed the Chairman of the Atomic Safety and Licensing Board Panel to empanel a Board to determine whether a hearing is required based on the principles set forth in the Commission's March 13, 1980 Memorandum and Order in *Public Service Company of Indiana* (Marble Hill Nuclear Generating Station, Units 1 and 2), CLI-80-10, 11 NRC ———. It further ordered that, if the Board determines that a hearing is required, the Board conduct an adjudicatory hearing solely on the issues identified in the Confirmatory Order. The Confirmatory Order was again modified on April 4, 1980, and Decade again requested a hearing, as it had before on the original Confirmatory Order of November 30, 1979 and on the January 3, 1980 modification.

On May 15, 1980, an Atomic Safety and Licensing Board was designated to rule upon Decade's request for hearing and to preside over the proceeding in the event that a hearing is ordered. The members of the Board are: Dr. Richard F. Cole, Dr. J. Venn Leeds, and Mr. Herbert Grossman, who will serve as Chairman of the Board. The Board will conduct a prehearing conference beginning at 9:30 a.m. on July 30, 1980 at the Carlton Inn Motel, 1515 Memorial Drive, Two Rivers, Wisconsin 54241. All prospective parties to this proceeding, or their respective counsel, are directed to attend. At the prehearing conference the Board will consider all requests for hearings in light of the Commission's Order of May 12, 1980, discuss specific issues that might be considered at an evidentiary hearing, and consider possible further scheduling in the proceeding.

The Petitioner shall file a supplement to its petitions not later than 15 days prior to the special prehearing conference which shall include a list of specific contentions sought to be litigated in this proceeding. The Licensee and Staff are requested to file any responses to the supplemented petition by July 28, 1980 and deliver copies to the Board on that date.

The public is invited to attend the prehearing conference. No oral limited appearance statements will be permitted at the conference. If a hearing is granted, opportunity for limited appearance statements will be afforded at subsequent evidentiary hearings near the site of the facility. Written limited appearance statements may be mailed to the Secretary of the Commission, U.S. Nuclear Regulatory Commission, Washington, D.C. 20555 or submitted at any subsequent conferences or sessions of the evidentiary hearing.

Dated at Bethesda, Maryland this 25th day of June, 1980.

By order of the Board.

For the Atomic Safety Licensing Board.

Herbert Grossman,

Chairman.

[FR Doc. 80-20001 Filed 7-2-80; 8:45 am]

BILLING CODE 7590-01-M

[Dockets Nos. S50-599 and S50-600]

Commonwealth Edison Co., et al. (Carroll County Station Site); Assignment of Atomic Safety and Licensing Appeal Board

Notice is hereby given that, in accordance with the authority conferred by 10 CFR 2.787(a), the Chairman of the Atomic Safety and Licensing Appeal Panel has assigned the following panel members to serve as the Atomic Safety and Licensing Appeal Board for this proceeding on the Application for Construction Permits and a Request for Early Site Review filed by the Commonwealth Edison Company, *et al.*: Alan S. Rosenthal, Chairman, Dr. John H. Buck and Thomas S. Moore.

Dated: June 24, 1980.

C. Jean Bishop,

Secretary to the Appeal Board.

[FR Doc. 80-19991 Filed 7-2-80; 8:45 am]

BILLING CODE 7590-01-M

Implementation of Requirements for Environmental Qualification of Electrical Equipment; Meeting

AGENCY: U.S. Nuclear Regulatory Commission.

ACTION: Notice of meeting.

SUMMARY: On May 23, 1980, the NRC issued a Memorandum and Order that defines Commission's requirements with respect to the environmental qualification of electrical equipment at nuclear power plants. In connection with these new requirements, the NRC will hold regional meetings to explain in more detail each of the requirements.

Dates and Locations of Regional Meetings to be Held From 8:30 a.m. to 3 p.m.

July 14, 1980—Region I—Holiday Inn, 260 Goodard Boulevard, King of Prussia, Pennsylvania

July 14, 1980—Region II—Hyatt Regency, Lancaster Room, 265 Peachtree Street, NE., Atlanta, Georgia

July 16, 1980—Region III—Marriott O'Hare Motel, 8535 W. Higgins Road, Chicago, Illinois

July 17, 1980—Regions IV and V—Holiday Inn North, Irving, Texas

FOR FURTHER INFORMATION CONTACT: Robert A. Purple, Division of Licensing, U.S. Nuclear Regulatory Commission, Washington, D.C. 20555, (301) 492-7672.

SUPPLEMENTAL INFORMATION: The primary purpose of these meetings will

be to: (1) Provide a more detailed technical explanation of the new NRC requirements; (2) provide a description of the NRC approach, schedule, and administrative procedures to be followed in implementing these requirements; and (3) provide a forum for discussion of the requirements.

Persons other than the NRC staff and licensee representatives may observe the proceedings but will be permitted to participate in the discussions only as time will allow.

Registration of attendees will be conducted prior to each meeting at the designated locations.

Dated at Bethesda, Maryland, this 27th day of June 1980.

For the Nuclear Regulatory Commission.

Darrell G. Eisenhut,

Director, Division of Licensing, Office of Nuclear Reactor Regulation.

[FR Doc. 80-20146 Filed 7-2-80; 8:45 am]

BILLING CODE 7590-01-M

OFFICE OF MANAGEMENT AND BUDGET

Agency Forms Under Review

Background

When executive departments and agencies propose public use forms, reporting, or recordkeeping requirements, the Office of Management and Budget (OMB) reviews and acts on those requirements under the Federal Reports Act (44 U.S.C., Chapter 35). Departments and agencies use a number of techniques including public hearings to consult with the public on significant reporting requirements before seeking OMB approval. OMB in carrying out its responsibility under the Act also considers comments on the forms and recordkeeping requirements that will affect the public.

List of Forms Under Review

Every Monday and Thursday OMB publishes a list of the agency forms received for review since the last list was published. The list has all the entries for one agency together and grouped into new forms, revisions, extensions, or reinstatements. Some forms listed as revisions may only have a change in the number of respondents or a reestimate of the time needed to fill them out rather than any change to the content of the form. The agency clearance officer can tell you the nature of any particular revision you are interested in. Each entry contains the following information:

The name and telephone number of the agency clearance officer (from whom a copy of the form and supporting documents is available);

The office of the agency issuing this form;

The title of the form;

The agency form number, if applicable;

How often the form must be filled out;

Who will be required or asked to report;

An estimate of the number of forms that will be filled out;

An estimate of the total number of hours needed to fill out the form; and

The name and telephone number of the person or office responsible for OMB review.

Reporting or recordkeeping requirements that appear to raise no significant issues are approved promptly. Our usual practice is not to take any action on proposed reporting requirements until at least ten working days after notice in the Federal Register but occasionally the public interest requires more rapid action.

Comments and Questions

Copies of the proposed forms and supporting documents may be obtained from the agency clearance officer whose name and telephone number appear under the agency name. The agency clearance officer will send you a copy of the proposed form, the request for clearance (SF83), supporting statement, instructions, transmittal letters, and other documents that are submitted to OMB for review. If you experience difficulty in obtaining the information you need in reasonable time, please advise the OMB reviewer to whom the report is assigned. Comments and questions about the items on this list should be directed to the OMB reviewer or office listed at the end of each entry.

If you anticipate commenting on a form but find that time to prepare will prevent you from submitting comments promptly, you should advise the reviewer of your intent as early as possible.

The timing and format of this notice have been changed to make the publication of the notice predictable and to give a clearer explanation of this process to the public. If you have comments and suggestions for further improvements to this notice, please send them to Jim J. Tozzi, Assistant Director for Regulatory and Information Policy, Office of Management and Budget, 726 Jackson Place, Northwest, Washington, D.C. 20503

DEPARTMENT OF AGRICULTURE

Agency Clearance Officer—Richard J. Schrimper—447-6201

Revisions

Food and Nutrition Service
Model Food Stamp Forms
FNS-393, 394, 395, 396, 397
On occasion
Food Stamp Participants & State Agencies, 63,947,246 Responses; 18,104,095 hours
Charles A. Ellett, 395-7340

Reinstatements

Agricultural Marketing Service
Special Report—Status of Custodial Bank Account
For Shippers' Proceeds
P&SA 131
On occasion
Description not furnished by agency, 2,800 responses; 1,400 hours
Charles A. Ellett, 395-7340
Agricultural Marketing Service
Application for Registration Under Packers & Stockyards Act
Agencies or Dealers Selling Livestock (Interstate)
P&SA116, P&SA116-1
On occasion
Description not furnished by agency, 1,725 responses; 828 hours
Charles A. Ellett, 395-7340
Agricultural Marketing Service
Livestock Scale Test Report
P&SA-212 & 218
Semi-annually
Description not furnished by agency, 11,600 responses; 2,900 hours
Charles A. Ellett, 395-7340
Agricultural Marketing Service
Annual Report of Clearing Agency
P&SA-122
Annually
Description not furnished by agency, 30 responses; 90 hours
Charles A. Ellett, 395-7340
Agricultural Marketing Service
Annual Report of Posted Stockyards
P&SA-129
Annually
Description not furnished by agency, 36 responses; 72 hours
Charles A. Ellett, 395-7340
Agricultural Marketing Service
Annual Report of Auction Market, Commission Firms
Dealer or market agency (livestock)
P&SA 124, 124-1, 126, 130, & 134
Annually
Description not furnished by agency, 10,500 responses; 9,849 hours
Charles A. Ellett, 395-7340
Agricultural Marketing Service
Special Report—"Statement of Accounts Payable for Livestock"
P&SA-135

On occasion
Description not furnished by agency, 100 responses; 25 hours
Charles A. Ellett, 395-7340
Agricultural Marketing Service
Regulations—Business Dealings of Packers and Live Poultry
Dealers and Handlers with Poultry Growers and Sellers
P&SA-216
Semi-annually
Description not furnished by agency, 1,750 responses; 280 hours
Charles A. Ellett, 395-7340
Agricultural Marketing Service
Trust Fund Agreement—Special Report (Livestock Buyers and Sellers)
PSA-5
On occasion
Description not furnished by agency, 200 responses; 54 hours
Charles A. Ellett, 395-7340
Agricultural Marketing Service
Packer Inquiry Under Packers & Stockyards Act (To Determine Jurisdiction of Persons in Slaughtering & Meat Processing)
PS-132
On occasion
Description not furnished by agency, 800 responses; 264 hours
Charles A. Ellett, 395-7340
Agricultural Marketing Service
Annual Report of Packers
P&S-125
Annually
Description not furnished by agency, 900 responses; 2,700 hours
Charles A. Ellett, 395-7340
Agricultural Marketing Service
Reparation Complaint (Packers & Stockyards Act Violations)
PSA-202
On occasion
Description not furnished by agency, 50 responses; 25 hours
John M. Allen, 395-3785

DEPARTMENT OF COMMERCE

Agency Clearance Officer—Edward Michals—377-3627

Extensions

National Bureau of Standards
Package Size Survey Form
NBS-181
On occasion
State and local gov't weights and measures officials, 100 responses; 25 hours
William T. Adams, 395-4814

Reinstatements

Bureau of the Census
School Enrollment Supplement—October 1979 CPS
CPS-1
Annually
68,000 households in CPS sample, 68,000 responses; 6,800 hours
William T. Adams, 395-4814

Bureau of the Census
Business and Professional Classification Report
B-625
Quarterly
Business & professional firms obtaining new EI numbers, 44,500 responses; 11,125 hours
Off. of Federal Statistical Policy & Standard, 673-7974

DEPARTMENT OF ENERGY

Agency Clearance Officer—Diane W. Lique—633-8526

New Forms

EPA/Utility Solar Domestic Hot Water Pilot Program
EPA-474 F-G
Monthly
Utility companies and residential customers, 7,272 responses; 888 hours
Jefferson B. Hill, 395-7340

EPA/Utility Solar Domestic Hot Water Pilot Program
EPA-474 A-E
On occasion
Utility companies and residential customers, 1,200 responses; 4,900 hours
Jefferson B. Hill, 395-7340

Revisions

Supply and Disposition of Natural Gas
EIA-176, 6-1341-A
Annually
Natural gas and SNG producers, distributors, pipeline, 1,500 responses; 22,500 hours
Jefferson B. Hill, 395-7340

DEPARTMENT OF HEALTH AND HUMAN SERVICES

Agency Clearance Officer—Joseph J. Strnad—245-7448

Reinstatements

Health Resources Administration
Application for School of Medicine—Special Requirements and Assurances Under Health Professions Capitation Grant program
Annually
Schools of medicine and medical residency programs, 3,620 responses; 2,810 hours
Richard Eisinger, 395-6880

DEPARTMENT OF THE INTERIOR

Agency Clearance Officer—William L. Carpenter—343-6716

New Forms

Bureau of Land Management
Actual Grazing Use Record
4130-5
Annually
Holders of grazing permits/leases, 15,000 responses; 7,500 hours
Charles A. Ellett, 395-7340

Departmental and Other
State Review forms for Local Preservation, Ordinances and Districts
FHR-8-299A, FHR-8-299B
On occasion
State historic preservation offices, 160 responses; 53 hours
Charles A. Ellett, 395-7340

Reinstatments

Bureau of Mines
Railroad Agents Report of Shipments of Minerals and Mineral Products
6-1198-M
Monthly
Railway stations handling mineral products, 624 responses; 312 hours
Charles A. Ellett, 395-7340

Bureau of Mines
Forecast of Lead and Zinc Production, Imports, and Consumption
6-1173-A, 6-1173-B
Annually
Producers of lead and wine, 20 responses; 20 hours
Charles A. Ellett, 395-7340

DEPARTMENT OF JUSTICE

Agency Clearance Officer—Donald E. Larue—633-3526

Extensions

Immigration and Naturalization Service
Arrival Information
N-14A
On Occasion
Applicants for benefits under I&N Act, 2,000 responses; 500 hours
Andrew R. Uscher, 395-4814

DEPARTMENT OF THE TREASURY

Agency Clearance Officer—Ms. Joy Tucker—376-0436

New Forms

Bureau of the Mint
OIE Survey of Food and Kindred Products and Tobacco Products Industries
Single time
Manufacturers of food and tobacco products, 742 responses, 44,520 hours
Warren Topelius, 395-7340

U.S. DEPARTMENT OF EDUCATION

Agency Clearance Officer—William A. Wooten—472-2655

New Forms

Guidance Team Training Program Forms
ED 785
Single time
Adults from community agencies and homes 2,496 responses; 749 hours
Laverne V. Collins, 395-6880

ENVIRONMENTAL PROTECTION AGENCY

Agency Clearance Officer—Henry F. Beal—755-2744

New Forms

Controlled Trading Survey
Single Time
Environmental Program Managers, 1 Response; 100 hours
Edward H. Clarke, 395-7340

Application for Federal Assistance (EPA Research, Demonstration, and Training Programs)
EPA 5700-12
On occasion
Description not furnished by Agency, 1,440 responses; 25,000 hours
Edward H. Clarke, 395-7340

Revisions

National Pollutant Discharge Elimination System-Discharge Monitoring Report
EPA 3320-1
Other (see SF-83)
NPDES permittees Discharging to U.S. Waters, 212,480 responses; 36,122 hours
Edward H. Clarke, 395-7340

EQUAL EMPLOYMENT OPPORTUNITY COMMISSION

Agency Clearance Officer—Thomas P. Goggin—634-6983

Revisions

State and Local Government Information (EEO4)
EEOC 164
Annually
State & local governments with 15+ employees, 28,500 responses; 199,500 hours
Laverne V. Collins, 395-6880

COMMUNITY SERVICES ADMINISTRATION

Agency Clearance Officer—Jack Stoehr—254-5300

Extensions

Application for Recognition of a CAA Attorney's Certification
OEO-372
Annually
CAP agencies, 1,300 responses; 1,300 hours
Arnold Strasser, 395-6880
Certificate of Applicant's Attorney
CSA 393
Annually
CAP agencies, 500 responses; 125 hours
Arnold Strasser, 395-6880
Grantee Refunding Certificate
CSA -395
On occasion
CAP agencies, 1,600 responses; 800 hours
Arnold Strasser, 395-6880
Administrative Costs Report
CSA-315D
On occasion
CAP agencies, 800 responses; 400 hours
Arnold Strasser, 395-6880
Application for Recognition of a Community Action Agency
CSA-370
Annually CAP agencies, 1,300 responses; 1,300 hours
Arnold Strasser, 395-6880

FEDERAL RESERVE SYSTEM

Agency Clearance Officer—Carolyn B. Doying—452-3512

Revisions

Annual Dealer Reports of Condition
FR 2002, 2003
Annually
Primary Dealers in U.S. Government securities, 37 responses; 1,850 hours
Warren Topelius, 395-7340

RAILROAD RETIREMENT BOARD

Agency Clearance Officer—Pauline Lohens—312-751-4692

Revisions

Monitoring of Student Beneficiaries
G-311, G-315 & G-317
Annually
Student beneficiaries, 25,500 responses; 1,900 hours
Barbara F. Young, 395-6880

SMALL BUSINESS ADMINISTRATION

Agency Clearance Officer—John Anderson—653-6890

Revisions

Compliance Report
SBA 707
Annually
Small businesses, 100,000 responses; 8,370 hurs
Edward C. Springer, 395-4814

VETERANS ADMINISTRATION

Agency Clearance Officer—R. C. Whitt—389-2146

Revisions

Information From Remarried Widow/er
21-4103
On occasion
Remarried widow/er, 22,000 responses; 7,333 hours
Laverne V. Collins, 395-6880

Reinstatements

Computation of Loan Amount for Mobile Home Unit
26-8641A
On occasion
Lenders, 9,800 responses; 1,633 hours
Laverne V. Collins, 395-6880

C. Louis Kincannon,
Acting Deputy Assistant Director for Reports Management.

[FR Doc. 80-20097 Filed 7-2-80; 8:45 am]
BILLING CODE 3110-01-M

OFFICE OF SCIENCE AND TECHNOLOGY POLICY

Intergovernmental Science, Engineering, and Technology Advisory Panel; Meeting

In accordance with the Federal Advisory Committee Act, Pub. L. 92-463, the Office of Science and Technology Policy announces the following meeting:

Name: Intergovernmental Science, Engineering, and Technology Advisory Panel (ISETAP) Full Panel Meeting.
Date: Friday, July 25, 1980 8:30 a.m.-2:00 p.m.
Place: Rayburn House Office Building, Room 2325, Washington, D.C.
Type of Meeting: Open.
Contact Person: Dr. Joseph E. Clark, Executive Secretary, ISETAP, Executive Office of the President, Office of Science and Technology Policy, 202/395-4596.

Minutes of the meeting: Executive minutes of the meeting will be available from the office of Dr. Clark.

Tentative Agenda

- Progress on Action Items from January Panel Meeting;
- Issues/Actions on OSTP/OMB Memo (Preliminary reports from EPA, Commerce, DOD);
- Issues/Actions on our Assessment Projects on Intergovernmental Science and Technology with NSF and AAAS);
- Recommendations from Task Forces on Energy, Human Resources, Environment, and Transportation.

William J. Montgomery,
Executive Officer, Office of Science and Technology Policy.

[FR Doc. 80-19860 Filed 7-2-80; 8:45 am]
BILLING CODE 3170-01-M

Intergovernmental Science, Engineering, and Technology Advisory Panel; Meeting

In accordance with the Federal Advisory Committee Act, Pub. L. 92-463, the Office of Science and Technology Policy announces the following meeting:

Name: Intergovernmental Science, Engineering, and Technology Advisory Panel (ISETAP) Transportation, Commerce, and Community Development Task Force.
Date: Thursday, July 24, 1980 1 p.m.-4:30 p.m.
Place: U.S. Department of Transportation, 400 7th Street, S.W., Room 10228 (MIC Room), Washington, D.C.
Type of Meeting: Open.

Contact Person: Ms. Deborah Rudolph, Staff Director, ISETAP, Transportation, Commerce, and Community Development Task Force, U.S. Department of Transportation, 202/426-4208.

Minutes of the meeting: Executive minutes of the meeting will be available from the office of Ms. Rudolph.

Tentative Agenda

- Transport of Hazardous Material
- DOT Research Initiatives and Training Activities
- Task Force Recommendations
- Discussion of HUD Research Findings Related to ISETAP Priority Problems
- Discussion of Activities in the Department of Commerce

William J. Montgomery,

Executive Officer, Office of Science and Technology Policy.

[FR Doc. 80-19961 Filed 7-2-80; 8:45 am]

BILLING CODE 3170-01-M

Intergovernmental Science, Engineering, and Technology Advisory Panel; Meeting

In accordance with the Federal Advisory Committee Act, Pub. L. 92-463, the Office of Science and Technology Policy announces the following meeting:

Name: Intergovernmental Science, Engineering, and Technology Advisory Panel (ISETAP) Natural Resources and Environment task Force.

Date: Thursday, July 24, 1980 1:00 p.m.-4:30 p.m.

Place: New Executive Office Building, 726 Jackson Place, N.W., Room 2008, Washington, D.C.

Type of Meeting: Open.

Contact Person: Mr. Mike Italiano, Senior Policy Analyst, ISETAP 202/395-4596.

Minutes of the meeting: Executive minutes of the meeting will be available from the office of Mr. Italiano.

Tentative Agenda

- Review of Task Force Issues Discussed at the January Full Panel meeting
- Formal Workplan Approval
- Approval of Health Effects Research Recommendations
- Disposition of Hazardous Waste R&D Report
- Review of EPA and Interior Programs Affected by Press/Watson/McIntyre Memo of May 20
- Briefing on Nuclear Waste Disposal/State Planning Council Activities
- Briefing on Goundwater and Drinking Water Quality Programs
- Discussion of Possible Task Force Activities Regarding Acid Rain
- Update on NOAA Landsat Transition Plan.

William J. Montgomery,

Executive Officer, Office of Science and Technology Policy.

[FR Doc. 80-19962 Filed 7-2-80; 8:45 am]

BILLING CODE 3170-01-M

Intergovernmental Science, Engineering, and Technology Advisory Panel; Meeting

In accordance with the Federal Advisory Committee Act, Pub. L. 92-463, the Office of Science and Technology Policy announces the following meeting:

Name: Intergovernmental Science, Engineering, and Technology Advisory Panel (ISETAP; Science and Technology Transfer Task Force)

Date: Thursday, July 24, 1980 4:45 p.m.-6:00 p.m.

Place: U.S. Department of Transportation, 400 7th Street S.W., Room 10228 (MIC Room), Washington, D.C.

Type of Meeting: Open

Contact Person: Mr. Robert Goldman, Staff Director, ISETAP Science and Technology Transfer Task Force, Executive Office of the President, Office of Science and Technology Policy, 202/395-4596

Minutes of the meeting: Executive minutes of the meeting will be available from the office of Mr. Goldman.

Tentative Agenda

- ISETAP Work Program Priorities
- Task Force Role in Monitoring Implementation of OMB-OSTP-White House Directive on R&D Planning

William J. Montgomery,

Executive Officer, Office of Science and Technology Policy.

[FR Doc. 80-19963 Filed 7-2-80; 8:45 am]

BILLING CODE 3170-01-M

RADIATION POLICY COUNCIL

[FRL 1532-6]

Extension of Time for Comments on Issues Relating to Federal Regulation of Occupational Exposures to Ionizing Radiation

SUMMARY: The Radiation Policy Council's Task Force on Federal Occupational Radiation Exposure Regulations is extending the time, from July 11 to July 25, within which comments should be received on issues relating to Federal regulation of occupational exposures to ionizing radiation.

ADDRESS: Public comments should be mailed in quadruplicate to the Radiation Policy Council c/o Docket Office, Docket W-008, Occupational Safety and Health Administration, Department of Labor, Room S6212, 200 Constitution Avenue, N.W., Washington, D.C. 20210. The communications received will be available for public inspection and copying at the above location between 9 a.m. and 4 p.m., Monday through Friday.

SUPPLEMENTARY INFORMATION: The Task Force on Federal Occupational Radiation Exposure Regulations is preparing a position paper to be submitted to the Radiation Policy Council on August 15, 1980. The Task Force published a notice of inquiry on June 18, 1980 (45 FR pages 41254-5) which listed a number of issues on which it sought public comment by July 11, 1980. Because of the interest already expressed by the public in commenting on these issues, the Task Force is extending the time within which comments should be received from July 11, 1980 to July 25, 1980. Persons wishing to comment should refer to the notice of inquiry published on June 18, 1980. Comments received later than July 25, 1980 will be reviewed and evaluated to the extent that time permits.

FOR FURTHER INFORMATION CONTACT: Dr. Sheldon Weiner, Chairman Task Force on Federal Occupational Radiation Exposure Regulations, c/o Directorate of Health Standards Programs, N3669, Occupational Safety and Health Administration, Department of Labor, 200 Constitution Avenue NW., Washington, D.C. 20210, (202) 523-7151.

Carl R. Gerber,

Director, U.S. Radiation Policy Council.

[FR Doc. 80-20093 Filed 7-2-80; 8:45 am]

BILLING CODE 6560-01-M

[FRL 1527-1]

Notice of Inquiry

Correction

In FR Doc. 80-19458 appearing at page 43508 in the issue of Friday, June 27, 1980, the following changes should be made:

1. On page 43511, first column, first paragraph, fifth line, insert the word "of" after the word "Use".
2. The word "progency" appearing on page 43511, first column, third paragraph, next to last line; second line of footnote;[1] and second column, 14th line of the second complete paragraph, should read "progeny".
3. On page 43512, second column, fourth paragraph, last line, delete "?? group."

BILLING CODE 1505-01-M

SECURITIES AND EXCHANGE COMMISSION

[Release No. 11233; 812-4658]

BNP U.S. Finance Corp.; Application for an Order Exempting Applicant From All Provisions of Investment Company Act

June 26, 1980.

In the matter of BNP U.S. Finance Corporation, c/o Peter H. Darrow, Esq., Cleary, Gottlieb, Steen & Hamilton, 1

State Street Plaza, New York, New York 10004 (812-4658).

Notice is hereby given that BNP U.S. Finance Corporation ("Applicant") filed an application on April 10, 1980, and amendments thereto on June 4, 1980, and June 20, 1980, for an order of the Commission pursuant to Section 6(c) of the Investment Company Act of 1940 ("Act") exempting Applicant from all provisions of the Act. All interested persons are referred to the application on file with the Commission for a statement of the representations contained therein, which are summarized below.

Applicant states that it was organized under the laws of Delaware on April 3, 1980, solely for the purposes described more fully below. All the outstanding shares of capital stock of Applicant, when issued, will be purchased by Banque Nationale de Paris ("BNP"), a French commercial bank, or by a wholly-owned subsidiary of BNP.

In connection with a proposed issuance of commercial paper in the United States, BNP filed an application for an order of the Commission pursuant to Section 6(c) of the Act exempting it from all provisions of the Act, which was granted on August 7, 1979 (Investment Company Act Release No. 10813). The pending application states that if such commercial paper were issued directly by BNP, the payments consituting interest on the commercial paper notes could be subject to French withholding tax. BNP has been informed that, if such a tax were imposed, its commercial paper would have to bear a higher interest rate than other commercial paper of similar maturities with a similar credit rating. BNP states that potential investors might be reluctant to purchase commercial paper subject to withholding tax because of the uncertainties and paper work involved to claim the credit. The sole business of Applicant will be to deposit with, or loan to, BNP the proceeds of the sale of commercial paper or other securities, and substantially all of its assets will consist of amounts receivable from BNP. BNP will unconditionally guarantee payment on any security issued by Applicant.

BNP is a foreign bank holding company registered with the Board of Governors of the Federal Reserve System ("Federal Reserve Board") and is subject to the provisions of the Bank Holding Company Act of 1956 ("1956 Act"). Since 1974, BNP has filed with the Federal Reserve Board an annual report containing detailed information with respect to BNP and its subsidiaries. In the future such annual reports by BNP will include information concerning Applicant. Applicant states that the scope of BNP's activities in the United States is limited by and regulated under the 1956 Act, which provides, in part, that the Federal Reserve Board has the power under certain circumstances to terminate certain United States activities of BNP or to terminate BNP's control of Applicant.

Applicant proposes to issue and sell commercial paper notes in minimum denominations of $100,000 in the United States through commercial paper dealers to the types of investors that ordinarily participate in the United States commercial paper market. In the alternative, BNP may issue the commercial paper directly. BNP and Applicant believe that the aggregate amount of commercial paper that will be outstanding in the first year will average $150-$200 million. Applicant will lend to or deposit with BNP the proceeds of sales of commercial paper made by Applicant except for amounts needed to repay maturing securities issued by Applicant and to meet its expenses.

Applicnt plans to sell the notes without registration under the Securities Act of 1933 ("1933 Act"), in reliance upon an opinion of its special legal counsel in the United States that, under the circumstances of the proposed offering, the commercial paper would be entitled to the exemption from the registration requirements of the 1933 Act provided for certain short-term commercial paper by Section 3(a)(3) thereof. Applicant will not proceed with its proposal offering until it has received such opinion letter. Applicant does not request Commission review or approval of such opinion letter and the Commission expresses no opinion as to the availability of any such exemption. Applicant further represents that the presently proposed issue of securities and any future issue of its debt securities in the United States shall have received, prior to issuance, one of the three highest investment grade ratings from at least one of the nationally recognized investment rating organizations and that its United States counsel shall certify to the Commission, if requested, that such rating has been received; provided, however, that no such rating shall be required to be obtained, if in the opinion of United States counsel for Applicant, such counsel having taken into account for the purposes thereof the doctrine of "integration" referred to in various releases and no-action letters made public by the Commission, an exemption from registration is available with respect to such issue under Section 4(2) of the 1933 Act. Applicant represents that the commercial paper notes will be direct liabilities of Applicant and will rank *pari passu* among themselves and with all other unsecured debt of Applicant. The guarantee of BNP will rank *pari passu* with all other unsecured debt of BNP, including its deposit liabilities.

Applicant undertakes to ensure that each dealer in the commercial paper will provide each offeree with a memorandum describing the business of BNP and Applicant and containing BNP's most recent publicly available financial statements, audited in accordance with French auditing practices. Applicant states that the offering memorandum will include a paragraph highlighting the material differences between French accounting standards applicable to French banks and generally accepted accounting principles employed by United States banks. Applicant represents that the memorandum will be updated as promptly as practicable to reflect material adverse changes in BNP's financial status and will be at least as comprehensive as those customarily used in offering commercial paper in the United States. Applicant states that it may make future offerings of its debt securities in the United States, and that such debt securities will be unconditionally guaranteed by BNP. Applicant undertakes further to ensure that, in connection with any such offerings, offerees will be provided with disclosure documents at least as comprehensive in their description of BNP and its business and financial statements as the memorandum in the presently proposed offering. Applicant consents to having any order granting the relief requested under Section 6(c) of the Act expressly conditioned upon its compliance with the foregoing undertakings concerning disclosure documents.

The application states that Morgan Guaranty Trust Company of New York or the Commission will be authorized to accept service of process in any action against Applicant or BNP based on the commercial paper or the guarantees relating thereto and instituted in any state or federal court by the holder of any commercial paper note. Applicant and BNP expessly submit to the jurisdiction of any state or federal court in the City and State of New York in respect of any such action. Such appointment of an authorized agent to accept service of process and such consent to jurisdiction shall be irrevocable until all amounts due and to become due in respect of the commercial paper notes have been paid.

Applicant and BNP will also be subject to suit in any other court in the United States which would have jurisdiction because of the manner of the offering of the commercial paper or otherwise. The application also states that Applicant and BNP will similarly consent to jurisdiction and appoint a United States agent for service of process in any action based on any future offerings of debt securities that it may make in the United States.

Section 3(a)(3) of the Act defines investment company to mean "any issuer which is engaged or proposes to engage in the business of investing, reinvesting, owning, holding, or trading in securities, and owns or proposes to acquire investment securities having a value exceeding 40 per centum of the value of such issuers total assets (exclusive of government securities and cash items) on an unconsolidated basis." Applicant states that it may be considered to be an investment company as defined under the Act.

Section 6(c) of the Act provides, in part, that the Commission, by order upon application, may conditionally or unconditionally exempt any person from any provisions of the Act, if and to the extent that such exemption is necessary or appropriate in the public interest and consistent with the protection of investors and the purposes fairly intended by the policy and provisions of the Act.

Applicant asserts that the rationale for the exemption granted to BNP extends to Applicant because of the close relationship between the two companies and because the obligations of Applicant will be guaranteed unconditionally by BNP. The sole business of Applicnt will be to operate as a financing vehicle for BNP. Applicant states that its revenues will be adequate to service fully its obligations under the commercial paper notes because its charges or its loans to BNP will be fixed to ensure an adequate income flow. Applicant concludes that the purchase of the commercial paper notes will be the equivalent of purchasing obligations of BNP. BNP has been granted an exemption from the provisions of the Act pursuant to Section 6(c) of the Act and Applicant argues that, if, instead, it is used as a financing vehicle, the same policy considerations should apply and Applicnt should be granted an exemption. Applicant also asserts that the public policy concerns which led to the enactment of the Act are not applicale to Applicant and that the holders of Applicant's securities do not require the protection afforded by the Act.

Notice is further given that any interested person may, not later than July 21, 1980, at 5:30 p.m., submit to the Commission in writing, a request for a hearing on the application accompanied by a statement as to the nature of his interest, the reasons for such request and the issues, if any, of fact or law proposed to be controverted, or he may request that he be notified if the Commission shall order a hearing thereon. Any such communication should be addressed: Secretary, Securities and Exchange Commission, Washington, D.C. 20549. A copy of such request shall be served personally or by mail upon Applicant at the address stated above. Proof of such service (by affidavit or, in the case of an attorney-at-law, by certificate) shall be filed contemporaneously with the request. As provided by Rule 0-5 of the rules and regulations promulgated under the Act, an order disposing of the application herein will be issued as of course following said date unless the Commission thereafter orders a hearing upon request or upon the Commission's own motion. Persons who request a hearing, or advice as to whether a hearing is ordered, will receive any notices and orders issued in this matter, including the date of the hearing (if ordered) and any postponements thereof.

For the Commission, by the Division of Investment Management, pursuant to delegated authority.

George A. Fitzsimmons,

Secretary.

[FR Doc. 80-19964 Filed 7-2-80; 8:45 am]

BILLING CODE 8010-01-M

[Release No. 11232, 812-4662]

Consolidated Rail Corp.; Filing of Application for Order Exempting Conrail Equity Corporation From All Provisions of Investment Company Act

June 25, 1980.

In the matter of Consolidated Rail Corporation, Six Pen Center Plaza, Philadelphia, Pennsylvania 19104 (812-4662).

Notice is hereby given that Consolidated Rail Corporation ("Applicant"), a Pennsylvania corporation created pursuant to the provisions of the Regional Rail Reorganization Act of 1973, as amended ("Rail Act"), filed an application on April 11, 1980, and an amendment thereto on June 5, 1980, for an order, pursuant to Section 6(c) of the Investment Company Act of 1940 ("Act"), exempting Conrail Equity Corporation ("CEC"), a proposed subsidiary of Applicant which will be incorporated to facilitate the establishment of a noncontributory employee stock ownership plan, from all provisions of the Act. All interested persons are referred to the application on file with the Commission for a statement of the representations contained therein, which are summarized below.

According to the application, following the crisis in rail transportation in the northeastern United States which resulted from the bankruptcy of several railroads, the Rail Act was enacted. Pursuant to its terms, on April 1, 1976, Applicant received rail related assets from various transferors, including the railroads in reorganization in the northeast. In payment for these assets, Applicant issued 25,000 shares of its common stock, par value $1 per share ("Conrail Common") and 31,740,373 shares of its Series B preferred stock, par value $1 per share ("Conrail Series B"), all of which shares were deposited with a special court pending determination of the appropriate distribution to the transferors. In March 1980, that court ordered that one share of Conrail Series B be issued in the name of one of the transferors. The Rail Act also provided for investments in Applicant of up to $3.3 billion by the federal government through the United States Railway Association ("USRA"), a corporation comprised of representatives of the federal government, railroad and labor management, state and local governments, railway shippers and financial institutions. The responsibilities of USRA include: providing federal financing for Applicant, monitoring Applicant's performance and making recommendations to Congress. In consideration of USRA's investments to date, Applicant has issued to USRA $1 billion in principal amount of 7.5% convertible debentures and approximately 18 million shares of Series A preferred stock, par value $1 per share ("Conrail Series A").

Applicant represents that the Rail Act conditions USRA's investment of the final $345 million of the currently authorized federal investment in Applicant upon Applicant's creating and having in effect an employee stock ownership plan which meets certain requirements set forth in Section 216(f). of the Rail Act. Applicant states that in order to obtain those final funds it intends to put into effect on or about

July 1, 1980, an employee stock ownership plan ("Plan") meeting those requirements. One of the requirements of Section 216(f) of the Rail Act is that the Plan must contain a provision for its termination, and the defeasence of the employees' interests, if Applicant has not attained certain specified financial and operational levels ("Benchmarks") within approximately ten years after Applicant's initial contribution to the Plan ("Benchmark Period"). Applicant states that it determined that such a provision might conflict with Section 403(c) of the Employee Retirement Income Security Act of 1974 ("ERISA"), as well as with the tax qualification requirements of Section 401(a) of the Internal Revenue Code of 1954 ("Code"), which, in general, prohibit the assets of an employee stock ownership plan from inuring to the benefit of the sponsoring employer. Applicant further states that the Rail Act also requires that the Plan must contain any provisions that USRA, with the concurrence of its Finance Committee (a quasi-independent committee of USRA's board of directors consisting of the Secretaries of the Departments of Transportation and the Treasury and the Chairman of USRA), deem reasonably necessary to protect the interests of the United States in certain specified respects.

In order to meet the various statutory requirements of the Rail Act, ERISA and the Code, Applicant intends to establish the Plan and fund it with securities of a newly formed subsidiary, CEC, created by Applicant solely to implement the Plan. Applicant proposes to issue Conrail Common to its subsidiary, CEC, and in exchange, receive securities issued by CEC. During the Benchmark Period, CEC would continue to hold the Conrail Common while Applicant used its holdings of CEC securities to fund the Plan through yearly contributions of CEC securities to the Plan. Following the Benchmark Period, the CEC securities then held by the Plan could be redeemed with CEC for varying amounts, depending upon whether the Benchmarks had been attained. According to the application, on April 16, 1980, Applicant's Board of Directors approved the Plan and authorized its chief executive officer to execute the necessary documents to form CEC, and to adopt the Plan. The Plan, including the use of the CEC format, was endorsed by the USRA and the Departments of the Treasury and Transportation.

Applicant states that CEC will be a corporation organized under the laws of Pennsylvania, with a business purpose limited to: (1) Owning and holding the Conrail Common contributed to it and (2) investing securities or any other property received in substitution for or in addition to its ownership of the Conrail Common. In addition, Applicant states that CEC will be specifically prohibited from incurring any indebtedness; that Applicant will enter into an agreement to pay CEC's operational expenses; and that Applicant's employees will serve, without additional compensation, as officers and directors of CEC. All of CEC's assets, which will consist of approximately 4.412 million shares of Conrail Common (without exercisable voting rights) and $44,200 in cash, will be contributed to CEC by Applicant in order to implement the Plan, in exchange for which CEC will issue all of its authorized stock to Applicant, consisting of one share of common stock, par value $1 per share ("CEC Common"), and 4.412 million shares of preferred stock, par value $0.01 per share ("CEC Preferred"). Only the one share of CEC Common, to be continuously held by Applicant, will carry voting rights (except, the CEC Preferred will be entitled to vote in situations involving certain amendments to the CEC Articles of Incorporation), and no dividends will be paid on shares of CEC Common or CEC Preferred.

According to the application the CEC Preferred will have a liquidation preference and will be either subject to mandatory redemption or redeemable at the option of the holder, as described below. If the Benchmarks are met during the prescribed Benchmark Period (anticipated to be January 1, 1981 to December 31, 1990), the CEC Preferred would have a per share liquidation preference equal to one share of Conrail Common or a proprotionate amount of any substituted or supplementary assets, and would be subject to mandatory redemption by CEC for Conrail Common or other stock and assets held by CEC in substitution for the Conrail Common. If the Benchmarks are not met during the Benchmark Period, the CEC Preferred would be redeemable at the opton f the holder at the redemption price of $0.01 per share, which would be the per share liquidation preference under those circumstances.

According to the application, the Plan is a noncontributory, employee stock ownership plan, which Applicant expects to be qualified under Section 401(a) of the Code. Participation by all employees of Applicant in the Plan will be mandatory, except that employees who are members of certain collective bargaining units may, under some circumstances, waive their rights to participate in the Plan. Applicant will contribute to the Plan 441,200 shares of CEC Preferred on or as of December 31, 1980, and again on or as of December 31 of each of the next nine years thereafter. Applicant states that no distribution of such CEC Preferred will be made by the Plan during the Benchmark Period. If the Benchmarks are met and the CEC Preferred shares are redeemed by the Plan for the Conrail Common, or other assets then held by CEC, the trustee administering the Plan ("Trustee") would distribute to all participants in the Plan who had retired or otherwise terminated their employment relationships with Applicant during the Benchmark Period, or to a deceased participant's designated beneficiary or estate, the Conrail Common or substituted assets allocable to their accounts. The Trustee would distribute to each remaining participant (or his beneficiary or estate) the Plan assets allocable to his account when such participant retired or otherwise terminated his employment relationship. However, if the Benchmarks are not met, the Plan would be terminated and the Trustee would distribute to all participants (or their beneficiaries or estates) the CEC Preferred shares allocable to their accounts, which shares could be redeemed at the option of the holder for $0.01 per share. Alternatively, prior to any such distribution of CEC Preferred shares, the Plan might be amended to permit the Plan to redeem the CEC Preferred shares at $0.01 per share so that cash rather than stock could be distributed by the Trustee to the participants.

Applicant states that it expects that the Plan will be considered by the Internal Revenue Service ("IRS") as meeting the requirements for qualification under Section 401(a) of the Code. Thus, pursuant to Section 3(c)(11) of the Act, Applicant would be excluded from the Act's definition of an "investment company." However, Applicant states that CEC might be considered to fall within the definition of an "investment company" under the Act. Section 3(a)(3) of the Act defines the term "investment company" to include any issuer which is engaged or proposes to engage in the business of investing, reinvesting, owning, holding, or trading in securities, and owns or proposes to acquire investment securities having a value exceeding 40 per centum of the value of such issuer's total assets (exclusive of Government securities and cash items) on an unconsolidated basis. Applicant states that because CEC will be an issuer (of the CEC Preferred and CEC Common) in

the business of owning or holding securities (Conrail Common) and because the Conrail Common is not a Government security, but rather would be an investment security, CEC may fall within the Act's definition of an "investment company." However, Applicant submits that CEC is not an appropriate subject for regulation under the Act.

Applicant asserts that the substantial involvement of federal departments in the planning of the structure of CEC and the Plan, and the continual oversight of Applicant, CEC and the Plan by federal representatives, obviates the need for further regulation of CEC under the Act. Applicant states that the Plan will be subject to direct regulation by the Department of Labor under ERISA and the IRS pursuant to the Code, and that, although CEC will not be directly subject to regulation under ERISA or the Code, its organization and operations will be scrutinized by several federal agencies, including: (1) USRA, which was involved in the structuring of CEC and its relationship to the Plan, reviewed the CEC Articles of Incorporation ("CEC Articles") and has the power to monitor CEC, and to monitor any amendment of the CEC Articles, and (2) representatives of the Departments of the Treasury and Transportation, which were active participants in the process of planning CEC. In view of the foregoing, Applicant submits that the interests of the federal government and the employee participants are sufficiently protected, in a manner consistent with the Act's purposes, so that further regulation by the Commission would not be necessary in the public interest.

Applicant asserts that CEC should also be exempted from all of the provisions of the Act because CEC satisfies the intent and spirit of certain statutory exclusions from the Act. Section 3(b)(3) of the Act excepts from the definition of "investment company" any issuer all the outstanding securities of which (other than short-term paper and directors' qualifying shares) are directly or indirectly owned by a company excepted from the definition of investment company by Sections 3(b)(1) or (20 of the Act. Applicant recognizes that CEC does not meet the technical requirements of Section 3(b)(3) because: (1) after December 31, 1980, its Securities will be held by two entities, Applicant and the Plan, and (2) Applicant, as one of the entities owning CEC securities, is not a company excepted from the definition of an "investment company" by Section 3(b)(1) or Section 3(b)(2). Nevertheless, Applicant submits that the requested exemption for CEC would be consistent with the statutory intent of Section 3(b)(3) because CEC will have no public shareholders (unless and until the CEC Preferred is distributed in 1991) and because its corporate parents, Applicant and the Plan, may be considered not to be investment companies.

Applicant also asserts that CEC satisfies the spirit of Section 3(c)(1) of the Act, which excludes from the definition of "investment company" any issuer whose outstanding securities (other than short-term paper) are beneficially owned by not more than one hundred persons and which is not making and does not presently propose to make a public offering of its securities. That section further provides that, for purposes of that section, beneficial ownership by a company shall be deemed to be ownership by one person, except that if such company owns 10 percentum or more of the outstanding voting securities of the issuer, beneficial ownership shall be deemed to be that of the holders of such company's outstanding securities (other than short-term paper). Applicant acknowledges that, because it owns more than ten percent of CEC's voting securities and because it has more than 100 holders of its securities, CEC cannot rely on Section 3(c)(1). However, Applicant submits that the purpose of the attribution rule of Section 3(c)(1) is to prevent public companies from establishing subsidiary investment companies in order to bypass regulation under the Act. Applicant states that because its equity securities are presently not publicly traded securities and its debentures are not and will not be acquired by the public with an intent to obtain an interest in Applicant's holding of CEC securities, the intent of Section 3(c)(1) of the Act would not be served by attributing Applicant's CEC ownership to its own security holders. In this regard, Applicant notes that CEC would be able to rely on Section 3(c)(1) of the Act if proposed amended Rule 3c-2 were adopted. That proposed rule, in pertinent part, would provide that for the purpose of Section 3(c)(1) of the Act, beneficial ownership by a company owning 10 percent or more of the outstanding voting securities of any issuer shall be deemed to be beneficial ownership by one person if and so long as the value of all securities of all issuers who are excluded from the definition of investment company by Section 3(c)(1) of the Act owned by such company does not exceed 5 percent of the value of the company's total assets. Applicant states that, although it is difficult to ascertain the value of the CEC stock, having assets of its own in excess of $4 billion, its investment in CEC would meet the requirements of proposed amended Rule 3c-2.

In view of the foregoing, Applicant requests that the Commission, pursuant to Section 6(c) of the Act, grant an unconditional exemption for CEC from all provisions of the Act. Section 6(c) of the Act provides, in part, that the Commission may exempt any person, security, or transaction, or any class or classes of persons, securities or transactions, from any provisions of the Act or of any rule or regulation under the Act, if and to the extent that such exemption is necessary or appropriate in the public interest and consistent with the protection of investors and the purposes fairly intended by the policy and provisions of the Act. Applicant submits that exemption of CEC from the provisions of the Act is consistent with the purposes of the Act because CEC is not affected with a national public interest of the type intended to be regulated under the Act and because CEC does not present the dangers against which the Act was designed to protect.

As noted above, Applicant expects that the Plan will be considered by the IRS as meeting the requirements for qualification under Section 401(a) of the Code and consequently, does not seek exemptive relief from the Act for the Plan. Accordingly, the requested order pursuant to Section 6(c) of the Act will not be issued until such time as Applicant files an amendment to its application advising the Commission that the Plan has received a determination from the IRS stating that it is qualified.

Notice his further given that any interested person may, not later than July 17, 1980, at 5:30 p.m., submit to the Commission in writing, a request for a hearing on this matter accompanied by a statement as to the nature of his interest, the reasons for such request and the issues, if any, of fact or law proposed to be controverted, or he may request that he be notified if the Commission shall order a hearing thereon. Any such communication should be addressed: Secretary, Securities and Exchange Commission, Washington, D.C. 20549. A copy of such request shall be served personally or by mail upon Applicant at the address stated above. Proof of such service (by affidavit or, in the case of an attorney-at-law, by certificate) shall be filed contemporaneously with the request. After the filing of the aforementioned amendment to the application, and as

provided by Rule 0-5 of the rules and regulations promulgated under the Act, an order disposing of the application herein will be issued as of course following said date unless the Commission thereafter orders a hearing upon request or upon the Commission's own motion. Persons who request a hearing, or advice as to whether a hearing is ordered, will receive any notices and orders issued in this matter, including the date of the hearing (if ordered) and any postponements thereof.

For the Commission, by the Division of Investment Management, pursuant to delegated authority.

George A. Fitzsimmons,

Secretary.

[FR Doc. 80-19965 Filed 7-2-80; 8:45 am]

BILLING CODE 8010-01-M

[Release No. 34—16939; File No. SR-BSPS-80-5]

Bradford Securities Processing Services, Inc.; Proposed Rule Change by Self-Regulatory Organization

Pursuant to Section 19(b)(1) of the Securities Exchange Act of 1934, 15 U.S.C. 78s(b)(1), as amended by Pub. L. No. 94-29, 16 (June 4, 1975), notice is hereby given that on June 16, 1980, the above-mentioned self-regulatory organization filed with the Securities and Exchange Commission a proposed rule change as follows:

Statement of the Terms and Substance of the Proposed Rule Change

The text of the proposed rule change is as follows:

(a) Bradford Securities Processing Services, Inc. (the "Corporation") shall offer to its participants a Mutual Fund Redemption Service ("MFRS"). A Participant may utilize the MFRS by delivering to the office of the Corporation (a) the duly endorsed certificate representing shares to be redeemed or a letter of liquidation accompanied by a stock power together with or, in place thereof, such other document(s) in such form and executed in such manner as the agent for redemption of the shares of the subject mutual fund shall require for the redemption of book entry shares; and (b) instructions as to the number of shares to be redeemed and the disposition of the proceeds of redemption. The Corporation will arrange for the certificate, letter, stock power or other documents to be presented promptly to the Redemption Agent for the Fund. Upon collection, the Corporation will remit the funds as directed.

(b) SR-BSPS-78-5, Exhibit I is hereby amended to include the following:

X. Mutual Fund Redemption Service

The charge for the Mutual Fund Redemption Service will be the draft charge plus a $5.00 fee per redemption transaction. Participants delivering or shipping such items directly to the Corporation's office in the city where the redemption is to be made will not be assessed the draft charge.

The basis and purpose of the foregoing proposed rule change is as follows:

The proposed rule change is a codification of an existing service, policy and practice of the Corporation set forth in Exhibit J, Item 2, "Draft Collections—All Types of Securities" of the Corporation's Registraton as a Clearing Agency on Form CA-1, as amended, as of July 30, 1977. The proposed rule change clarifies that the draft collection service described therein includes the presentation for redemption of mutual fund shares to the agent charged with effecting such redemptions, the collection of the proceeds of such redemption and disposition of such proceeds. The MFRS is designed to speed the receipt of redemption proceeds for Participants by utilizing the drafting capabilities and branch network of the Corporation. This includes the rapid transport of the securities via private carrier and special postal arrangements. The securities are presented for redemption faster, thereby ensuring a more current redemption value and prompter collection and remittance of the proceeds.

The proposed rule change will confirm an aspect of the interpretation and application of an existing policy, practice and rule as to an item already included in "Draft Collections—All Types of Securities" which has been included in the Corporation's Registration as a Clearing Agency on Form CA-1, as amended, as of July 30, 1977, Exhibit J. Item 2, that describes the various services offered by the Corporation. The offering of this service facilitates the prompt and accurate clearance and settlement of securities transactions, fosters cooperation and coordination with persons engaged in the clearance and settlement of securities transactions, helps to remove impediments to and perfection of the mechanism of a national system for the prompt and accurate clearance and settlement of securities transactions, and is protective of investors and the public interest.

No comments have been solicited or received from participants or others on the proposed rule change. However, the use of this service by participants confirms its benefit and value.

The Corporation does not believe that the proposed rule change will impose any burden on competition.

The foregoing rule change has become effective, pursuant to Section 19(b)(3) of the Securities Exchange Act of 1934. At any time within sixty days of the filing of such proposed rule change, the Commission may summarily abrogate such rule change if it appears to the Commission that such action is necessary or appropriate in the public interest, for the protection of investors, or otherwise in furtherance of the purposes of the Securities Exchange Act of 1934.

Interested persons are invited to submit written data, views and arguments concerning the foregoing. Persons desiring to make written submissions should file six (6) copies thereof with the Secretary of the Commission, Securities and Exchange Commission, Washington, D.C. 20549. Copies of the filing with respect to the foregoing and of all written submissions will be available for inspection and copying in the public reference room, 1100 L Street, N.W., Washington, D.C. Copies of such filing will also be available for inspection and copying at the principal office of the above-mentioned self-regulatory organization. All submissions should refer to the file number referenced in the caption above and should be submitted on or before July 24, 1980.

For the Commission by the Division of Market Regulation pursuant to delegated authority.

June 27, 1980.

Shirley E. Hollis,

Assistant Secretary.

[FR Doc. 80-20065 Filed 7-2-80; 8:45 am]

BILLING CODE 8010-01-M

[Release No. 16936; File No. SR-NASD-80-1]

National Association of Securities Dealers, Inc.; Order Approving Proposed Rule Change

June 26, 1980.

In the Matter of National Association of Securities Dealers, Inc., 1735 K Street, N.W., Washington, D.C. 20546.

On January 7, 1980, the National Association of Securities Dealers, Inc. (the "NASD") filed with the Commission, pursuant to Section 19(b)(1) of the Securities Exchange Act of 1934 (the "Act"), 15 U.S.C. 78s(b)(1), and Rule 19b-4 thereunder, copies of a proposal to amend Schedule C under Article I, Section 2 of its By-Laws to

revise its requirements for registration and qualification of representatives associated with member broker-dealer firms (File No. SR-NASD-80-1).[1] In particular, the proposal would create several new categories of "limited representative" registration,[2] clarify the registration requirements for specified categories of principals, establish procedures for persons wishing to transfer registration from the SECO program[3] to the NASD, and make certain technical and stylistic changes to Schedule C. The revisions to the registration requirements for representatives and principals are an interim measure, pending Commission action on proposed Rule 15b7-1, and will expire on May 31, 1981.[4]

Notice of the filing together with its terms of substance, was given by publication of a Commission Release (Securities Exchange Act Release No. 16563, February 11, 1980) and by publication in the Federal Register (45 FR 10496, Feburary 15, 1980). The proposed rule change was amended on May 20, 1980. Notice of the amendment was given by publication of a Commission Release (Securities Exchange Act Release No. 16841, May 23, 1980) and by publication in the Federal Register (45 FR 37789, June 4, 1980). No comments were received on either the original filing or the amendment.

Currently, Schedule C of the NASD By-Laws specifies that representatives shall qualify as "Registered Representatives." Schedule C also contains another category of registration, "Registered Options Representative," for representatives whose activities include the solicitation and/or sale of option contracts. The proposed amendment to Schedule C would retain these categories, with certain modifications, and would create two new limited representative categories: Limited Representative—Investment Company and Variable Contracts Products and Limited Representative—Direct Participation Programs.

Under the proposed rule change, the existing "Registered Representative" category would be redesignated "General Securities Representative" and qualification requirements would remain unchanged. In addition, the proposal would establish certain "grandfathering" provisions for persons previously qualified as Registered Representatives.

The new "Limited Representative—Investment Company and Variable Contracts Products" category would permit an individual whose activities are limited to the solicitation, purchase and/or sale of redeemable securities of companies registered pursuant to the Investment Company Act of 1940, securities of closed-end companies registered pursuant to the Investment Company Act of 1940 during the period of original distribution only, and variable contracts and insurance premium funding programs registered pursuant to the Securities Act of 1933 to register as a limited representative after passing a specialized qualification examination. The new "Limited Representative—Direct Participation Programs" would permit an individual whose activities are limited to the solicitation, purchase and/or sale of programs which provide for flow-through tax consequences regardless of the structure of the legal entity or vehicle for distribution including, but not limited to, oil and gas programs, real estate programs, agricultural programs, cattle programs, condominium securities, Subchapter S corporate offerings and other programs of a similar nature to register as a limited representative after passing a specialized qualification examination.[5]

The rule proposal also would clarify the requirements for registration as Limited Principal—Investment Company and Variable Contracts Products and Limited Principal—Direct Participation Programs to indicate that, before registering as such, a limited principal in either category must first be registered in the analogous category of limited representative or as a General Securities Representative. Registered Options Principals would first be required to be or become qualified as General Securities Representatives and as Registered Options Representatives.

Furthermore, the proposed rule change would establish new procedures for persons qualified under the SECO program who wish to become registered with the NASD. Under the proposed rule change, the President of the NASD would have the discretion to grant a grace period, not to exceed one year, to persons associated with applicants for membership to the NASD also registered under the SECO program to permit the associated persons to continue to function as representatives or principals pending their qualification with the NASD.

The Commission finds that the proposed rule change is consistent with the requirements of the Act and the rules and regulations applicable to registered national securities associations, and in particular, with the requirements of Section 15(b) and 15A of the Act and the rules and regulations thereunder. The Commission believes the activities of limited representatives in the proposed categories are sufficiently specialized to make it unnecessary for them to qualify as representatives in unrelated areas of the securities industry. By providing for the registration of limited representatives, the Commission believes that the NASD may provide greater opportunities for persons to register as brokers and dealers and become associated with a member firm. In addition, the Commission believes the NASD's proposal accomplishes these results in a manner which is not designed to permit unfair discrimination between brokers and dealers and which will assist the NASD in enforcing compliance by its members, and persons associated with its members, with the provisions of the Act, rules thereunder, and the rules of the NASD. The Commission also finds that the proposal enables the NASD to implement appropriate qualification standards for its members, consistent with the NASD's responsibilities under the Act.

The Commission finds good cause for approving the proposed rule change prior to the thirtieth day after the date of publication of notice of filing of amendment thereof. The proposed rule change imposes no additional restrictions on brokers and dealers or their associated persons. Further, by enabling such persons, to the extent their activities are limited solely to

[1] The proposed rule change defines a "representative" as a person associated with a member, including an assistant officer other than a principal, who is engaged in the investment banking or securities business for the member including supervision, solicitation or conduct of business in securities, or training of persons associated with a member for any of these functions.

[2] Under the proposal, a limited representative is an individual whose activities would be limited to certain specialized types of business and who could register to function as a representative in only those areas after passing a specialized qualification examination.

[3] SECO broker-dealers are registered broker-dealers who are not members of the NASD. Rule 15b8-1 under the Act requires persons associated with SECO broker-dealers to pass a qualification examination prior to engaging directly or indirectly in securities transactions.

[4] Proposed Rule 15b7-1 would establish uniform minimum qualification requirements for broker-dealers and their associated persons and would permanently establish categories of limited registration for principals and representatives. Securities Exchange Act Release No. 13679 (June 27, 1977), 43 FR 34328 (July 5, 1977).

[5] The NASD has filed two proposed rule changes to provide plans and specifications for its Investment Company Products/Variable Contracts and Direct Participation Programs Representative Examinations (SR-NASD-80-2, SR-NASD-80-4). Notice of the proposals were given in Securities Exchange Act Release Nos. 16563 (February 11, 1980) and 16711 (March 31, 1980), 45 FR 10496 (February 15, 1980) and 45 FR 23841 (April 8, 1980).

transactions involving securities in a limited category, to register with the NASD and qualify by taking a limited representative examination in lieu of a general securities examination, the proposed rule change may relieve a substantive regulatory burden. The Commission believes that the public interest would be served by the NASD's prompt implementation of the proposed new limited representative categories.

Copies of the proposed rule change, all subsequent amendments, all written statements with respect to the proposed rule change, as amended, which were filed with the Commission, and of all written communications relating to the proposed rule change as amended between the Commission and any persons were considered and are available for inspection and copying at the Commission's Public Reference Room, 1100 L Street, NW., Washington, D.C. (File No. SR-NASD-80-1).[6]

It is therefore ordered, pursuant to section 19(b)(2) of the Act, that the above-mentioned proposed rule change be, and it hereby is, approved.

By the Commission.

George A. Fitzsimmons,

Secretary.

[FR Doc. 80-20066 Filed 7-2-80; 8:45 am]

BILLING CODE 8010-01-M

[6]The Commission also considered public comments on proposed Securities Exchange Act Rule 15b7-1 (File No. S7-709) and public information submitted in connection with a pending rule change proposal of the NASD to amend Schedule C of its By-laws (File No. SR-NASD-75-6).

[Release No. 34-16942; File No. SR-OCC-80-5]

Options Clearing Corp.; Proposed Rule Change by Self-Regulatory Organization

Pursuant to section 19 (b) (1) of the Securities Exchange Act of 1934, 15 U.S.C. 78s (b) (1), as amended by Pub. L. No. 94-29, 16 (June 4, 1975), notice is hereby given that on June 20, 1980, the above-mentioned self-regulatory organization filed with the Securities and Exchange Commission a proposed rule change as follows:

Statement of the Terms of Substance of the Proposed Rule Change

The proposed rule change would modify OCC's sanctions and improve its procedures for disciplining participants for violation of OCC Rules, By-laws or agreements.

Statement of Basis and Purpose

The purpose of the proposed rule change is to improve OCC's procedures for disciplining participants for violations of OCC By-Laws, Rules or procedures or the Clearing Member's agreements with the Corporation and to delete the maximum fine limitation currently contained in OCC's rules.

Rule 1201 is proposed to be amended to clarify that the sanctions available to OCC under its Rules are coextensive with the sanctions enumerated in Section 17A(b)(3)(G) of the Securities Exchange Act of 1934, as amended. In addition, OCC foresees situations where the current $10,000 limitation on fines for any one offense might preclude it from appropriately disciplining participants. The proposed amendment deletes the $10,000 ceiling on fines, thereby eliminating the gap between a $10,000 fine and the sanction of expulsion from Clearing Membership.

Rule 1202 is proposed to be amended to improve OCC's procedures for disciplining participants. Currently, OCC rules provide for either the Chairman or President (or a Vice-President or Assistant Vice-President appointed by the President) or the Board of Directors (or a Disciplinary Committee thereof) to impose disciplinary sanctions on Clearing Members. The proposed amendment to Rule 1202 provides that in the case of contested disciplinary proceedings, disciplinary sanctions will be imposed by a Disciplinary Committee of the Board of Directors. It is believed that this amendment will eliminate potential conflicts that might arise in contested disciplinary proceedings where the staff acts as both prosecutor and judge. Since all contested disciplinary proceedings are proposed to be heard by a Disciplinary Committee of the Board of Directors, review of Disciplinary Committee decisions would be at the discretion of the Board of Directors.

The proposed rule change relates to the requirement under Section 17A(b)(3) of the Securities Exchange Act of 1934, as amended, that registered clearing agencies have appropriate rules and fair procedures for disciplining participants.

Comments were not and are not intended to be solicited with respect to the proposed rule change.

OCC does not believe that the proposed rule change would impose any burden on competition.

On or before August 7, 1980, or within such longer period (i) as the Commission may designate up to 90 days of such date if it finds such longer period to be appropriate and publishes its reasons for so finding or (ii) as to which the above-mentioned self-regulatory organization consents, the Commission will:

(A) by order approve such proposed rule change, or

(B) institute proceedings to determine whether the proposed rule change should be disapproved.

Interested persons are invited to submit written data, views and arguments concerning the foregoing. Persons desiring to make written submissions should file 6 copies thereof with the Secretary of the Commission, Securities and Exchange Commission, Washington, D.C., 20549. Copies of the filing with respect to the foregoing and of all written submissions will be available for inspection and copying in the Public Reference Room, 1100 L Street NW., Washington, D.C. Copies of such filing will also be available for inspection and copying at the principal office of the above-mentioned self-regulatory organization. All submissions should refer to the file number referenced in the caption above and should be submitted on or before July 24, 1980.

For the Commission by the Division of Market Regulation, pursuant to delegated authority.

Shirley E. Hollis,

Assistant Secretary.

June 27, 1980.

[FR Doc. 80-20067 Filed 7-2-80; 8:45 am]

BILLING CODE 8010-01-M

DEPARTMENT OF STATE

[Public Notice 716]

Bureau of Oceans and International Environmental and Scientific Affairs; Environmental Impact Statement

AGENCY: Department of State.

ACTION: Notice of Intent to Prepare an Environmental Impact Statement.

SUMMARY: The Department plans to prepare a draft environmental impact statement (DEIS) on the negotiation of an international regime for Antarctic mineral resources. The negotiation will take place within the framework of the Antarctic Treaty System. The purpose of the negotiation is to establish an international arrangement ot determine acceptability of mineral resource activities in Antarctica and to regulate such activities if they are determined to be acceptable. The draft environmental impact statement will review potential alternative mineral resource arrangements for Antarctica and the environmental effects of implementing such alternative regimes.

Copies of the DEIS will be made available for agency and public comment upon publication. Requests for copies of the DEIS and summaries of the public meeting should be addressed to

Ms. Irene Dybalski, Office of Environment and Health, Department of State, Room 7820, Washington, D.C. 20520 (202/632-9266).

William Alston Hayne,

Deputy Assistant Secretary for Environment, Natural Resources and Health.

June 26, 1980.

[FR Doc. 80-19957 Filed 7-2-80; 8:45 am]

BILLING CODE 4710-09-M

DEPARTMENT OF TRANSPORTATION

Coast Guard

[CDG 80-79]

Intent To Prepare an Environmental Impact Statement for a Proposed Bridge Across Green River, Mile 23.0, Near Kent, Wash.

AGENCY: U.S. Coast Guard, DOT.

ACTION: Notice of intent to prepare a draft environmental impact statement (DEIS).

NOTICE: All interested parties are notified that a draft environmental impact statement (DEIS) will be prepared by the Thirteenth Coast Guard District in connection with agency action on an application from the Washington State Department of Transportation (WSDOT) for approval of location and plans for a new fixed highway bridge across the Green River at Mile 23.0, near Kent, Washington. The Green River at the site of the proposed bridge has been determined to be a navigable water of the United States; therefore, a Coast Guard bridge permit is required.

SUPPLEMENTARY INFORMATION: A final environmental impact statement (FEIS) was prepared by WSDOT pursuant to the requirements of the Washington State Environmental Policy Act (SEPA). This FEIS was determined by the Coast Guard to be inadequate for its purposes. After a thorough review of this FEIS and all other pertinent information on the proposed project in accordance with applicable Federal procedures, the Coast Guard prepared an environmental assessment (EA) pursuant to Council on Environmental Quality (CEQ) regulations for implementing the procedural provisions of the National Environmental Policy Act of 1969, as amended (NEPA). It was determined, based on this EA, that the proposed project would have a significant impact on the quality of the human environment and therefore, an EIS would be required. Major impacts would include, but not be limited to, adverse effects on prime farmlands and wetlands. In addition, the project would be constructed within the floodplain of the Green River and has been the subject of substantial local controversy.

Action by the Coast Guard would consist of issuance or denial of a bridge permit. A bridge permit, if issued, could contain special conditions designed to meet the reasonable needs of navigation and to ensure compliance with appropriate Federal, State, and local laws and regulations relating to the environment.

Seven alternatives, including the applicant's proposed action, are discussed in the WSDOT FEIS. These alternatives, and any others determined during the scoping process, will be addressed in the DEIS prepared by the Coast Guard. Brief descriptions of each alternative are provided below.

(1) "Do nothing"—This alternative would provide no improvement to existing State Route (SR) 516. No new roadway would be built and no new crossing of the Green River would be required.

(2) "Improvement of the existing route"—Existing SR 516 between Reith Road and SR 181 would be widened to provide four 11-foot traffic lanes and a 2-foot, two-way, left turn lane. Sidewalks, curbs, and gutters would be constructed and existing open ditches would be eliminated. A temporary detour would be required at the western terminus of the project and the existing bridge across the Green River would be moved to accommodate this rerouting of traffic. Upon completion of the project the old bridge would be removed. Construction of a new curve at the western terminus would require an embankment approximately 25 feet in height. Limited improvements would be made at the eastern terminus (intersection of SR 516 and SR 181).

(3) "Expansion and improvement of public transit"—As described in the WSDOT FEIS, this alternative apparently would call for unspecified expansion and improvement in public transit services along existing SR 516. On page 98 it is stated that: "To allow a fair analysis of this alternate, it is *assumed* (emphasis in original text) that public transportation ridership would increase to the degree that auto traffic would be significantly reduced below present volumes." Specific details of this alternative are not presented in the WSDOT FEIS.

(4) "North Kent Bypass"—This alternative was originally included in a much longer realignment of SR 516 considered in 1965. As considered in the WSDOT FEIS, this alternative would extend from a western terminus to be contructed northwest of the existing intersection of SR 516 and Reith Road, thence northeasterly across the Green River, finally turning easterly to connect with SR 181, the eastern terminus of this alignment. This alternative apparently would include a four-land, partially controlled-access roadway. Specific details are not presented in the WSDOT FEIS.

(5) "Proposed Route"—This alternative represents the project proposed for construction by WSDOT. As described on page 3 of the WSDOT FEIS, "The proposed action is the realignment of State Route 516 between Reith Road and State Route 181, within the City of Kent and unincorporated King County. Included in this proposal are bridge crossings of the Green River and Mullen Slough. The structure over the Green River will also span Frager Road, a rural county road on the banks of the river. The proposed highway alignment is approximately 1.16 miles long, and would have two lanes in each direction separated by a paved median with barrier. Intersections at both ends of the project are complete. A state-owned borrow pit will be mined in order to provide embankment material for this project." The proposed highway would be constructed on a fill embankment up to 27 feet in height. Forty-three (43) acres of right-of-way would be required for the proposed project.

(6) "Combined Route"—This alternative also was originally part of a more extensive realignment of SR 516 that since has been shortened to extend eastward only to SR 181. The "original" Combined Route of 1965, shown on page 86 of the WSDOT FEIS, differs markedly from the "shortened" Combined Route shown on page 87 of that document. In addition to consideration only of the shorter section of roadway, the alignment shown on page 87 now would utilize approximately 3,000 feet of existing SR 516 immediately west of SR 181. The Combined Route would utilize the same design standards as the North Kent Bypass and Proposed Route. Specific details are not discussed in the WSDOT FEIS.

(7) "South Alternate"—The South Alternate originally was proposed by property owners affected by the alignment of the Proposed Route. This alternative would have the same east and west termini as the Proposed Route but would involve an alignment slightly to the south of the State's proposal. Bridges across Mullen Slough and the Green River would be required at more southerly crossing points and the overall alignment would be increased in length. Additional details are not presented in the WSDOT FEIS.

SCOPING PROCESS: The proposed bridge is an integral part of the overall highway project. Without the bridge, the proposed 1.16-mile highway segment would not be built; therefore, for the purposes of NEPA, the Coast Guard prepared EIS will consider the highway project in its entirety, from Reigh Road to SR 18. Scoping will be conducted in accordance with CEQ Regulations. The date, time, and location of the first scoping meeting has not been finalized at this time. The Coast Guard invites the participation of Federal, State, and local agencies, Indian tribes, the Washington State Department of Transportation, and other interested parties in determining the scope of issues to be addressed and in the identification of the significant issues related to the proposed project. Comments may be submitted at this time or during the formal scoping process. Agencies and individuals wishing to participate in the scoping process should inform this office as soon as possible. Interested parties wishing to receive future communications and announcements regarding this permit action will be added to the mailing list upon request.

ADDRESS: Comments and questions should be directed to: Commander, Thirteenth Coast Guard District, Aids to Navigation Branch, 915 Second Avenue, Seattle, Washington 98174.

Additional information may be obtained from Mr. Wayne Lee or Mr. John Mikesell by calling Area Code 206-442-5864 (FTS 399-5864) or by writing the above address.

Dated: June 12, 1980.

R. A. Bauman,

Rear Admiral, U.S. Coast Guard, Chief, Office of Navigation.

[FR Doc. 80-20024 Filed 7-2-80; 8:45 am]

BILLING CODE 4910-14-M

Federal Aviation Administration

Radio Technical Commission for Aeronautics (RTCA), Separation Study Review Group; Meeting

Pursuant to section 10(a)(2) of the Federal Advisory Committee Act (Pub. L. 92-463; 5 U.S.C. App. I) notice is hereby given of a meeting of the RTCA Separation Study Review Group to be held on July 24-25, 1980 in RTCA Conference Room 261, 1717 H Street, N.W., Washington, D.C. commencing at 9:00 a.m.

The Agenda for this meeting is as follows: (1) Chairman's Introductory Remarks: (2) Approval of Minutes of Sixth Meeting Held on December 11-12, 1979; (3) Review and Discussion of Federal Aviation Administration Reports on VOR Defined Jet Route Lateral Separation Study and Role of Surveillance in Lateral Separation. Discussions will Include: (a) Objectives of Study, (b) Treatment and Interpretation of Data, (c) Findings, and (d) Recommendations for Future Actions; and (4) Other Business.

Attendance is open to the interested public but limited to space available. With the approval of the Chairman, members of the public may present oral statements at the meeting. Persons wishing to present statements or obtain information should contact the RTCA Secretariat, 1717 H Street, N.W., Washington, D.C. 20006; (202) 296-0484. Any member of the public may present a written statement to the committee at any time.

Issued in Washington, D.C. on June 24, 1980.

Karl F. Bierach,

Designated Officer.

[FR Doc. 80-19790 Filed 7-2-80; 8:45 am]

BILLING CODE 4910-13-M

Radio Technical Commission for Aeronautics (RTCA), Special Committee 145—Digital Avionics Software; Meeting

Pursuant to section 10(a)(2) of the Federal Advisory Committee Act (Pub. L. 92-463; 5 U.S.C. App. I) notice is hereby given of a meeting of RTCA Special Committee 145 on Digital Avionics Software to be held on July 22-23, 1980 in Conference Rooms 9A B-C, DOT/Federal Aviation Administration Building, 800 Independence Avenue, SW., Washington, D.C. commencing at 9:30 a.m.

The Agenda for this meeting is as follows: (1) Introductory Remarks by RTCA Chairman; (2) Introductory Remarks by Committee Chairman; (3) Review of Committee Terms of Reference; (4) Industry and Government Presentations on Software Development, Configuration Control and Testing; (5) Establish Committee Work Program and Schedule for Accomplishment; and (6) Other Business.

Attendance is open to the interested public but limited to space available. With the approval of the Chairman, members of the public may present oral statements at the meeting. Persons wishing to present statements or obtain information should contact the RTCA Secretariat, 1717 H Street, NW., Washington, D.C. 20006; (202) 296-0484. Any member of the public may present a written statement to the committee at any time.

Issued in Washington, D.C. on June 24, 1980.

Karl F. Bierach,

Designated Officer.

[FR Doc. 80-19780 Filed 7-2-80; 8:45 am]

BILLING CODE 4910-13-M

Federal Highway Administration

Urban Mass Transportation Administration

Energy Impact Assessment Panel Discussion

Note.—This document originally appeared in the Federal Register for Tuesday, July 1, 1980. It is reprinted in this issue to meet requirements for publication on an assigned day of the week. (See OFR notice 41 FR 32914, August 6, 1976.)

AGENCY: Federal Highway Administration (FHWA), Urban Mass Transportation Administration (UMTA), DOT.

ACTION: Notice of public meeting.

SUMMARY: Notice is hereby given of a panel discussion addressing energy impact assessments sponsored by FHWA and UMTA.

DATES: Meetings will be held July 7 from 9 a.m. until 4 p.m. and July 8 from 9 a.m. until 3 p.m.

ADDRESS: Meetings will be held at the Department of Transportation Building, Room 3200, 400 Seventh Street SW., Washington, D.C.

FOR FURTHER INFORMATION CONTACT: For FHWA, Bruce Cannon, Office of Highway Planning, 202-426-1045, or Thomas P. Holian, Office of the Chief Counsel, 202-426-0761, Federal Highway Administration, 400 Seventh Street, SW., Washington, D.C. 20590. Office hours are from 7:45 a.m. to 4-15 p.m. ET, Monday through Friday. For UMTA, Douglas A. Kerr, Office of Planning Assistance, 202-472-5140, Urban Mass Transportation Administration, 400 Seventh Street SW., Washington, D.C. 20590. Office hours are from 8:30 a.m. to 5:00 p.m., ET, Monday through Friday.

SUPPLEMENTARY INFORMATION: The Federal Highway Administration and the Urban Mass Transportation Administration, as part of their continuing responsibility to ensure that energy considerations are incorporated into transportation planning, intend to offer technical assistance on energy impact assessments to State, regional, and local governments and transit operators. The subject panel discussion is designed to provide FHWA and UMTA with technical background information on energy impact assessment techniques for internal anslysis. This information will form, in

part, the basis for future technical assistance to be provided to State, regional, and local government units and transit operators on energy impact assessment. The panel discussion will be attended by eight representatives of various State, regional, and local governmental units with experience in energy impact analysis and energy related transportation planning issues. The discussion will focus on the techniques presently available to assess the energy impacts of highway and transit improvements at the systems and project levels. The discussion will address these energy impact assessment techniques from technical and implementation perspectives. The public is invited to attend this meeting subject to available space.

Issued on: June 27, 1980.

Theodore C. Lutz,

UMTA Administrator.

John S. Hassell, Jr.,

Deputy Federal Highway Administrator.

[FR Doc. 80-19858 Filed 6-30-80; 8:45 am]

BILLING CODE 4910-22-M

Federal Highway Administration

Environmental Impact Statement: Prince of Wales Island, Alaska

AGENCY: Federal Highway Administration (FHWA), DOT.

ACTION: Notice of intent.

SUMMARY: The FHWA is issuing this notice to advise the public that an environmental impact statement will be prepared for a proposed highway project in Prince of Wales Island, Alaska.

FOR FURTHER INFORMATION CONTACT: Ralph A. Frame, Acting Chief, Environmental Planning Branch, Office of Federal Highway Projects, 610 E. Fifth Street, Vancouver, Washington 98661, telephone 206-696-7751.

SUPPLEMENTARY INFORMATION: The FHWA, in cooperation with the Alaska State Department of Transportation and Public Facilities (DOT/PF) and the U.S. Forest Service, will prepare an environmental impact statement (EIS) on a proposal to improve and construct a road from Hollis Highway to the Town of Hydaburg on the Prince of Wales Island, Alaska.

The proposed improvement would involve the reconstruction of approximately 16 miles of an existing single lane road and the construction of approximately 7 miles of new road through currently unroaded lands to Hydaburg. Improvements to the corridor are considered necessary to provide for the existing and projected traffic demand. The road will provide a transportation link to the Town of Hydaburg and permit timber harvest and commercial development on the Prince of Wales Island.

Alternatives under consideration include (1) taking no action; (2) construct a single lane road with turnouts and; (3) construct a two lane road.

Letters describing the proposed action and soliciting comments have and will be sent to appropriate Federal, State, and local agencies, and to private organizations and citizens who have previously expressed interest in this proposal. An informal Public Hearing was held in the Town of Hydaburg. Scoping meetings were held with the Forest Service, the State DOT/PF, Alaska State Department of Fish and Game, USNMFS, USF&WS, SEALASKA Corporation, and Haida Corporation. No other formal scoping meetings are planned at this time.

An opportunity for Public Hearings will be provided after the Draft EIS is circulated for comment.

To ensure that the full range of issues related to this proposed action are addressed and all significant issues identified, comments and suggestions are invited from all interested parties. Comments or questions concerning this proposed action and the EIS should be directed to the FHWA at the address provided above.

Issued on: June 24, 1980.

James N. Hall,

Director, Office of Federal Highway Projects, Region 10, Vancouver, Washington.

[FR Doc. 80-20044 Filed 7-2-80; 8:45 am]

BILLING CODE 4910-22-M

Environmental Impact Statement: Hartford County, Conn.

AGENCY: Federal Highway Administration (FHWA), DOT.

ACTION: Notice of intent.

SUMMARY: The FHWA is issuing this notice to advise the public that an Environmental Impact Statement will be prepared for a proposed highway project in Hartford County, Connecticut.

FOR FURTHER INFORMATION CONTACT: David R. Billings, Environmental Engineer, Federal Highway Administration, 990 Wethersfield Avenue, Hartford, Connecticut 06114, Telephone (203) 244-2437; or James F. Sullivan, Director, Office of Environmental Planning, Connecticut Department of Transportation, 24 Wolcott Hill Road, Wethersfield, Connecticut, Telephone (203) 566-5704.

SUPPLEMENTARY INFORMATION: The FHWA in cooperation with the Connecticut Department of Transportation (Department), will prepare an environmental impact statement (EIS) on a proposal to construct Interstate Route 284 (I-284) in the municipalities of East Hartford and South Windsor in Hartford County, Connecticut. This proposal will involve the corridor determination for the construction of I-284 as a limited access expressway from the vicinity of Governor Street in East Hartford northerly, to Interstate Route 291 in South Windsor, Connecticut, a distance of about 2.9 miles. Construction of the corridor is considered desirable to accommodate existing and projected traffic demands and to divert a high volume of through traffic from local streets in East Hartford and South Windsor.

Alternatives under consideration include: (1) taking no action; (2) improving the existing street system; (3) using mass transit; (4) alternative highway alignments.

This proposal has an extensive history of coordination with Federal, State, local, and regional agencies and organizations. In addition, public informational meetings concerning traffic, engineering, environmental, social, economic, and land use issues have been held. Information from the coordination effort and meetings has revealed that possible impacts to scenic areas, flood plains and wetlands will occur. Other impacts include the relocation of residents and businesses, stream crossings, railroad crossings and/or relocations, dike crossings and/or relocations and impacts on air quality and on fish and wildlife. The severity of the impact will depend on the alternative selected.

Since the full range of issues relating to this project is believed to have been identified, scoping meetings are not deemed necessary at this time. However, the Advisory Council on Historic Preservation, the U.S. Fish and Wildlife Service, and Corps of Engineers will be asked to become cooperating agencies in the preparation of this EIS. The following Federal Agencies will also be invited to submit comments on this proposed action as they relate to the particular agency's filed of expertise: the Department of Housing and Urban Development, the Environmental Protection Agency, the Heritage Conservation and Recreation Service, and the Water Resources Council. Appropriate State and local agencies will also be requested to comment.

Other agencies, organizations, and individuals interested in submitting comments or questions should contact the FHWA or the Connecticut

Department of Transportation at the address provided above.

Issued on: June 25, 1980

D. J. Altobelli,

Division Administrator, Hartford, Connecticut.

[FR Doc. 80-20038 Filed 7-2-80; 8:45 am]

BILLING CODE 4910-22-M

Environmental Impact Statement; Montague County, Tex.

AGENCY: Federal Highway Administration (FHWA), DOT.

ACTION: Notice of intent.

SUMMARY: The FHWA is issuing this notice to advise the public that an environmental impact statement will be prepared for a proposed highway project in Montague County, Texas.

FOR FURTHER INFORMATION CONTACT: George H. Nelson, P.E., District Engineer, Federal Highway Administration, 826 Federal Building, Austin, Texas 78701, Telephone: (512) 397-5988.

SUPPLEMENTARY INFORMATION: The FHWA, in cooperation with the Texas State Department of Highways and Public Transportation (DHT), intends to prepare an environmental impact statement (EIS) on a proposal to upgrade U.S. Highway 82 in the vicinity of Saint Jo, Montague County, Texas. Existing U.S. Highway 82, a two lane facility, traverses the City of Saint Jo, bisecting the business district as well as the residential sections of the town. It is proposed to upgrade the facility to a four lane divided facility. Because of difficulty in predicting availability of funds, the DHT has not yet decided whether to use State or Federal funds to finance construction of this project.

The proposed improvements will provide better and safer access to local areas and uninterrupted flow to through traffic.

Four alternatives have been considered for this proposed project: (1) upgrade the existing facility through Saint Jo, (2) bypass Saint Jo around the northeast side, (3) bypass Saint Jo around the southwest side and (4) do nothing.

There are currently no plans to hold a formal scoping meeting for this proposal; however, coordination with agencies and appropriate public involvement (aspects of scoping) have been conducted throughout project development. A public meeting was advertised as required and held on October 15, 1974, in addition to previous meetings with the Chamber of Commerce, interested citizens, and news media. A Project Concept Conference was conducted on February 15, 1975, and as a result an Ecological Study was reported on August 11, 1975, a Cultural Properties Assessment was approved on July 22, 1975, and an Economic Report was made on July 29, 1975. It is anticipated that a public hearing will be held upon circulation of the DEIS.

To ensure that the full range of issues related to this proposed action are addressed and all significant issues identified, comments and suggestions are invited from all interested parties. Comments or questions concerning this proposed action and the EIS should be directed to the FHWA at the address provided above.

(Catalog of Federal Domestic Assistance Program Number 20.205, Highway, Research, Planning and Construction. The provisions of OMB Circular No. A-95 regarding State and local clearinghouse review of Federal and federally assisted programs and projects apply to this program.)

Issued on: June 24, 1980.

George H. Nelson,

District Engineer, Austin, Texas.

[FR Doc. 80-20039 Filed 7-2-80; 8:45 am]

BILLING CODE 4910-22-M

Federal Railroad Administration

Minority Business Resource Center Advisory Committee

Pursuant to Sections 19(a) and (2) of the Federal Advisory Committee Act (Pub. L. 92-463); 5 U.S.C. App. I), notice is hereby given of a meeting of the Minority Business Resource Center Advisory Committee to be held July 21, 1980, at 10 a.m. until 12 p.m. at the Chicago Hyatt Regency Hotel in the Columbian Room, 151 E. Wacker Drive, Chicago, Illinois 60601.

The agenda for the meeting is as follows:

—Review outstanding agenda items from the June 17, 1980 meeting.

—MBRC Program Overview.

Attendance is open to the interested public but limited to the space available. With the approval of the Chairman, members of the public may present oral statements at the meeting. Persons wishing to attend and persons wishing to present oral statements should notify the Minority Business Resource Center not later than the day before the meeting. Information pertaining to the meeting may be obtained from Ms. Betty Chandler, Advisory Committee Staff Assistant, Minority Business Resource Center, Federal Railroad Administration, 400 7th Street, S.W., Washington, D.C. 20590, telephone: (202) 426-2852. Any member of the public may present a written statement to the Committee at any time.

Issued in Washington, D.C. on June 25, 1980.

Earl D. Proctor,

Executive Director, Minority Business Resource Center.

[FR Doc. 80-20025 Filed 7-2-80; 8:45 am]

BILLING CODE 4910-06-M

Urban Mass Transportation Administration

Specifications for Light Rail Vehicles

AGENCY: Urban Mass Transportation Administration, DOT.

ACTION: Notice of Availability of Specifications and Request for Comment.

SUMMARY: The Urban Mass Transportation Administration (UMTA) has been working with operators and transit suppliers during the last two years to revise and update the "Standard Light Rail Vehicle Specification", prepared in 1971. The revised specification, titled "A General Specification for the Procurement of Light Rail Vehicle", prepared by N. D. Lea and Associates, is being issued for public comment. The Urban Mass Transportation Administration is interested in comments from all elements of the transit industry—car builders, suppliers, transit operators, consultants, etc., and from the general public.

DATE: Comments must be received by August 22, 1980.

ADDRESSES: 1. All comments should be submitted to Mr. Charles Elms, N. D. Lea and Associates, Dulles International Airport, P.O. Box 17030, Gateway I Building, Washington, D.C. 20041. 2. Copies of the specification may be obtained upon request from the Urban Mass Transportation Administration's Office of Rail and Construction Technology, UTD-30, 400 7th Street, S.W., Washington, D.C. 20590.

FOR FURTHER INFORMATION CONTACT: Stephen S. Teel, Office of Rail and Construction Technology, (202) 426-0090.

SUPPLEMENTARY INFORMATION: The specification was revised to incorporate improvements identified from "as-built" experience from Boston and Cleveland and to reflect the findings of a study that produced recommendations for more cost-effective light rail vehicle design as documented in a technical report titled "Cost Savings Potential of Modifications to the Standard Night Rail Vehicle Specification" (Report No. UMTA-MA-

06-0025-79-11, available from NTIS: PB 295-070).

The specification represents an element of the Urban Mass Transportation Administration's continuing activities in standardization of urban rail vehicles and systems with the objective of reducing life cycle costs and producing more reliable transit equipment. These include a rapid railcar standardization program and development of national design guidelines for rail transit.

Dated: June 26, 1980.

Theodore C. Lutz,

Administrator.

[FR Doc. 80-19827 Filed 7-2-80; 8:45 am]

BILLING CODE 4910-57-M

DEPARTMENT OF THE TREASURY

Fiscal Service

[Dept. Circ. 570, 1979 Rev., Supp. No. 22]

First General Insurance Co.; Surety Companies Acceptable on Federal Bonds; Termination of Authority

Notice is hereby given that the Certificate of Authority issued by the Treasury to the First General Insurance Company, Atlanta, Georgia under Sections 6 to 13 of Title 6 of the United States Code, to qualify as an acceptable surety on Federal bonds is hereby terminated effective this date.

The company was last listed as an acceptable surety on Federal bonds at 44 FR 38091, June 29, 1979.

With respect to any bonds currently in force with the First General Insurance Company, bond-approving officers of the Government should secure new bonds with acceptable sureties in those instances where a significant amount of liability remains outstanding.

Questions concerning this termination notice may be directed to the Audit Staff, Bureau of Government Financial Operations, Department of the Treasury, Washington, D.C. 20226. Telephone (202) 634-5010.

Dated: June 30, 1980.

William E. Douglas,

Commissioner.

[FR Doc. 80-20049 Filed 7-2-80; 8:45 am]

BILLING CODE 4810-35-M

OFFICE OF THE UNITED STATES TRADE REPRESENTATIVE

Letter to the Commissioner of Customs Concerning Implementation of the International Sugar Agreement

Executive Order 12224 of July 1, 1980, delegated to the United States Trade Representative the powers and duties of the President under the International Sugar Agreement 1977, Implementation (Pub. L. 96-236; 94 Stat. 336).

The following letter was sent to the Commissioner of Customs implementing the provisions for the Stock Financing Fund established by Article 51 of the International Sugar Agreement.

The United States Trade Representative,
Washington, D.C.

The Honorable Robert E. Chasen,
Commissioner of Customs, U.S. Customs Service, Department of the Treasury, Washington, D.C.

Dear Mr. Commissioner: Under the International Sugar Agreement, 1977, and decisions and regulations of the International Sugar Council under that Agreement, the United States must assure that sugar which is exported on or after July 1, 1980, and entered into the United States is accompanied by certain stamps and documentation required to demonstrate that a specified contribution has been paid to the Stock Financing Fund established in accordance with Article 51 of the Agreement. The President, by Executive Order 12224 of July 1, 1980, delegated to me or my designee the authority under the International Sugar Agreement, 1977, Implementation Act (Pub. L. 96-236; 94 Stat. 336) to take action implementing U.S. rights and obligations under the Agreement.

Accordingly, the U.S. Customs Service is directed to issue any necessary rules, regulations, directives or procedures to assure that sugar, in excess of one ton, which is classified under items 155.20 and 155.30 of the Tariff Schedules of the United States and which is exported from foreign countries, areas, or locations, on or after July 1, 1980, as a condition of entry or withdrawal from warehouse into U.S. customs territory be accompanied by valid stamps issued by the International Sugar Organization for the quantity of sugar so entered. The stamps must be affixed to the form required by the International Sugar Organization and the form must be certified either by an official of the U.S. Customs Service or the certifying authority of another member of the International Sugar Organization.

It is the responsibility of the U.S. Customs Service to assure that, unless otherwise directed, stamps for the amount of sugar entered are presented and are cancelled or otherwise marked by a U.S. Customs Official. These documents and stamps should then be sent to the Office of the U.S. Trade Representative.

The Customs Service may permit entry of any quantity of sugar not accompanied by sufficient valid stamps only upon posting of a bond, cash deposit, or other security deemed by the Customs Service to be equal to one and one half times the contribution for that quantity as established by the International Sugar Organization. The rate of contribution established by the International Sugar Organization is 50 cents per metric ton, but that rate may be varied in the future. I will inform you of any change, and notice of any change will be published in the Federal Register.

This letter also will be published in the Federal Register.

Sincerely,

Reubin O'D. Askew.

Note.—The U.S. Customs Service is not responsible for the purchase, sale, or distribution of any stamps. The Chemical Bank has been designated the authorized agent for sugar stamp sales in the United States.

Following are names and addresses of Chemical Bank personnel in New York, Chicago and San Francisco responsible for sugar stamp sales:

New York

William Middleton, Assistant Treasurer, Chemical Bank International, Collection Department, 55 Water Street, New York, New York 10005.
Telephone No.: (212) 952-3309.

Augustine Barboso, Assistant Manager, Chemical Bank International, Collection Department, 55 Water Street, New York, New York 10005.
Telephone No: (212) 952-3907.

Chicago

Chemical Bank International of Chicago, Sears Tower, 93rd Floor, 233 Wacker Drive, Chicago, Illinois 60606.
Attention: Soona Rek, Assistant Secretary; telephone No: (312) 876-7754.

San Francisco

Chemical Bank International of San Francisco, The Transamerican Pyrimid, 18th Floor, 600 Montgomery Street, San Francisco, California 94111.
Attention: Richard Mauro, Assistant Vice President, Brewster; telephone No: (415) 95 (extension 10).

Reubin O'D. Askew,

United States Trade Representative.

[FR Doc. 80-20248 Filed 7-2-80; 8:45 am]

BILLING CODE 3190-01-M

Sunshine Act Meetings

Federal Register
Vol. 45, No. 130
Thursday, July 3, 1980

This section of the FEDERAL REGISTER contains notices of meetings published under the "Government in the Sunshine Act" (Pub. L. 94-409) 5 U.S.C. 552b(e)(3).

CONTENTS

	Items
Federal Deposit Insurance Corporation	1-3
Federal Election Commission	4
Federal Maritime Commission	5
Federal Mine Safety and Health Review Commission	6
Federal Reserve System (Board of Governors)	7
Nuclear Regulatory Commission	8
United States Railway Association	9

1

FEDERAL DEPOSIT INSURANCE CORPORATION.

Notice of Agency Meeting

Pursuant to subsection (e)(2) of the "Government in the Sunshine Act" (5 U.S.C. 552b(e)(2)), notice is hereby given that at 1:00 p.m. on Saturday, June 28, 1980, the Board of Directors of the Federal Deposit Insurance Corporation met by telephone conference call to consider certain matters which it determined on motion of Chairman Irvine H. Sprague, seconded by Mr. Lewis G. Odom, Jr., acting in the place and stead of Director John G. Heimann (Comptroller of the Currency), concurred in by Director William M. Issac (Appointive), required its consideration on less than seven days' notice to the public.

The Board met in closed session to (1) accept sealed bids for the purchase of certain assets of and the assumption of the liability to pay deposits made in City and County Bank of Campbell County, Jellico, Tennessee, which was closed by the Commissioner of Banking for the State of Tennessee on June 28, 1980; (2) accept the bid for the transaction submitted by City and County Bank of Anderson County, Lake City, Tennessee; (3) approve a resulting application of City and County Bank of Anderson County for consent to purchase certain assets of and assume the liability to pay deposits made in the closed bank and to establish the three offices of the closed bank as branches of City and County Bank of Anderson County; (4) provide such financial assistance, pursuant to section 13(e) of the Federal Deposit Insurance Act (12 U.S.C. 1823(e)), as was necessary to effect the purchase and assumption transaction; and (5) appoint a liquidator for such of the assets of the closed bank as were not purchased by City and County Bank of Anderson County. In considering the matters in a closed session, the Board determined, by the same majority vote, that the public interest did not require consideration of the matters in a meeting open to public observation and that the matters could be considered in a closed meeting pursuant to subsections (c)(8), (c)(9)(A)(ii) and (c)(9)(B) of the "Government in the Sunshine Act" (5 U.S.C. 552b(c)(8), (c)(9)(A)(ii) and (c)(9)(B)).

The Board then met in open session to adopt a resolution approving the final agreement for the purchase by the Corporation of the building and property located at 1776 F Street, N.W., Washington, D.C.

The Board further determined, by the same majority vote, that no earlier notice of the meeting was practicable.

Dated: June 30, 1980.

Federal Deposit Insurance Corporation.

Hoyle L. Robinson,

Executive Secretary.

[S-1279-80 Filed 7-1-80; 11:01 am]

BILLING CODE 6714-01-M

2

FEDERAL DEPOSIT INSURANCE CORPORATION.

Notice of Agency Meeting

Pursuant to the provisions of the "Government in the Sunshine Act" (5 U.S.C. 552b), notice is hereby given that the Federal Deposit Insurance Corporation's Board of Directors will meet in open session at 1 p.m. on Monday, July 7, 1980, to consider the following matters:

Disposition of minutes of previous meetings.

Request by the Comptroller of the Currency for a report on the competitive factors involved in a proposed merger of Amoskeag National Bank & Trust Co., Manchester, New Hampshire, and Amherst Bank & Trust Company, Amherst, New Hampshire.

Memorandum proposing the appointment of an agent for service of process in the State of Georgia.

Memorandum re: Amendments to the FDIC Investment Program.

Memorandum re: Revised Merit Promotion Plan.

Appointment of an Associate Liquidator for Banco Credito y Ahorro Ponceno, Ponce, Puerto Rico (two resolutions).

Reports of committees and officers:

Minutes of the actions approved by the Committee on Liquidations, Loans and Purchases of Assets pursuant to authority delegated by the Board of Directors.

Reports of the Director of the Division of Bank Supervision with respect to applications or requests approved by him and the various Regional Directors pursuant to authority delegated by the Board of Directors.

Report of the Controller on the termination of the liquidation of First National Bank of Eldora, Eldora, Iowa.

The meeting will be held in the Board Room on the sixth floor of the FDIC Building located at 550 17th Street, N.W., Washington, D.C.

Requests for information concerning the meeting may be directed to Mr. Hoyle L. Robinson, Executive Secretary of the Corporation, at (202) 389-4425.

Dated: June 30, 1980.

Federal Deposit Insurance Corporation.

Hoyle L. Robinson,

Executive Secretary.

[S-1280-80 Filed 7-1-80; 11:01 am]

BILLING CODE 6714-01-M

3

FEDERAL DEPOSIT INSURANCE CORPORATION.

Notice of Agency Meeting.

Pursuant to the provisions of the "Government in the Sunshine Act" (5 U.S.C. 552b), notice is hereby given that at 2:30 p.m. on Monday, July 7, 1980, the Federal Deposit Insurance Corporation's Board of Directors will meet in closed session, by vote of the Board of Directors pursuant to sections 552b (c)(2), (c)(6), (c)(8), (c)(9)(A)(ii), (c)(9)(B), and (c)(10) of Title 5, United States Code, to consider the following matters:

Application for Federal deposit insurance:

Bank of the Southwest, a proposed new bank, to be located at 1201 Rio Rancho Drive, Unincorporated Sandoval County (P.O. Rio Rancho), New Mexico, for Federal deposit insurance.

Applications for consent to establish a branch:

Falmouth Bank and Trust Company, Falmouth, Massachusetts, for consent to

establish a branch on Route 28, six-tenths of a mile south/southwest of the Mashpee/New Seabury Rotary, Mashpee, Massachusetts.

The New York Bank for Savings, New York (Manhattan), New York, for consent to establish a branch (public accomodation office), at Kiosk No. 3, Nanuet Mall, Nanuet, New York.

Application for consent to reduce its capital accounts:

First Wisconsin Trust Company, Milwaukee, Wisconsin.

Request for exemption pursuant to section 348.4(b)(1) of the Corporation's rules and regulations entitled "Management Official Interlocks":

Bank of Pinehurst, Pinehurst, Georgia.

Recommendations regarding the liquidation of a bank's assets acquired by the Corporation in its capacity as receiver, liquidator, or liquidating agent of those assets:

Case No. 44,344-L—The Hamilton National Bank of Chattanooga, Chattanooga, Tennessee.
Case No. 44,345-L—The Hamilton National Bank of Chattanooga, Chattanooga, Tennessee.
Case No. 44,354-L—The Drovers' National Bank of Chicago, Chicago, Illinois.
Case No. 44,369-NR—United States National Bank, San Diego, California.
Case No. 44,370-NR—United States National Bank, San Diego, California.

Recommendations with respect to the initiation, termination, or conduct of admininstrative enforcement proceedings (cease-and-desist proceedings, termination-of-insurance proceedings, suspension or removal proceedings, or assessment of civil money penalties) against certain insured banks or officers, directors, employees, agents, or other persons participating in the conduct of the affairs thereof:

Names of persons and names and locations of banks authorized to be exempt from disclosure pursuant to the provisions of subsections (c)(6), (c)(8), and (c)(9)(A)(ii) of the "Government in the Sunshine Act" (5 U.S.C. 552b (c)(6), (c)(8), and (c)(9)(A)(ii)).

Personnel actions regarding appointments, promotions, administrative pay increases, reassignments, retirements, separations, removals, etc.:

Names of employees authorized to be exempt from disclosure pursuant to the provisions of subsections (c)(2) and (c)(6) of the "Government in the Sunshine Act" (5 U.S.C. 552b (c)(2) and (c)(6)).

The meeting will be held in the Board Room on the sixth floor of the FDIC Building located at 550-17th Street, N.W., Washington, D.C.

Requests for information concerning the meeting may be directed to Mr. Hoyle L. Robinson, Executive Secretary of the Corporation, at (202) 389-4425.

Dated: June 30, 1980.

Federal Deposit Insurance Corporation.

Hoyle L. Robinson,

Executive Secretary.

[S-1281-80 Filed 7-1-80; 11:01 am]

BILLING CODE 6714-01-M

4

[FR No. 1239]

FEDERAL ELECTION COMMISSION.

PREVIOUSLY ANNOUNCED DATE AND TIME: Tuesday, July 1, 1980, 10 a.m.

PLACE: 1325 K Street NW., Washington, D.C.

CHANGE IN MEETING: The following items have been added to this executive session (closed): Audit and review policy and Threshold audits.

* * * * *

PREVIOUSLY ANNOUNCED DATE AND TIME: Thursday, July 3, 1980, 10 a.m.

PLACE: 1325 K Street NW., Washington, D.C. (fifth floor).

CHANGE IN MEETING: A portion of the meeting will be closed to consider the following matter: Threshold audit letters.

* * * * *

DATE AND TIME: Tuesday, July 8, 1980, 10 a.m.

PLACE: 1325 K Street NW., Washington, D.C.

STATUS: This meeting will be closed to the public.

MATTERS TO BE CONSIDERED: Personnel. Compliance.

* * * * *

DATE AND TIME: Thursday, July 10, 1980, 10 a.m.

PLACE: 1325 K Street NW., Washington, D.C. (fifth floor).

STATUS: This meeting will be open to the public.

MATTERS TO BE CONSIDERED:

Setting of dates for future meetings.
Correction and approval of minutes
Certifications.
Advisory opinions:
- Draft AO 1980-59—Wm. J. Rumsey, Vice President and Assistant General Counsel, Lawyers Title Insurance Corporation.
- Draft AO 1980-65—Robert L. Ackerly, National Tire Dealers and Retreaders Association (NTDRA) & TIDE PAC.
- Draft AO 1980-68—H. Oliver Welch, Treasurer, Zell Miller for U.S. Senate Committee.
- Draft AO 1980-69—Myron E. Sildon (Operating Engineers Local 101 PAC).

Non-filer procedures.
1980 election and related matters.
Appropriations and budget.
Budget execution report.
Pending legislation.
Classification actions.
Routine administrative matters.

PERSON TO CONTACT FOR INFORMATION: Mr. Fred Eiland, Public Information Officer, telephone: 202-523-4065.

Marjorie W. Emmons,

Secretary to the Commission.

[S-1286-80 Filed 7-1-80; 3:31 pm]

BILLING CODE 6715-01-M

5

FEDERAL MARITIME COMMISSION.

TIME AND DATE: 10 a.m., July 7, 1980.

PLACE: Hearing Room One, 1100 L Street, NW., Washington, D.C. 20573.

STATUS: Closed.

MATTER TO BE CONSIDERED: Discussion of Commission's Anti-Rebating Program.

CONTACT PERSON FOR MORE INFORMATION: Francis C. Hurney, Secretary (202) 523-5725.

[S-1282-80 Filed 7-1-80; 12:45 pm]

BILLING CODE 6730-01-M

6

FEDERAL MINE SAFETY AND HEALTH REVIEW COMMISSION.

June 30, 1980.

TIME AND DATE: 10 a.m., Wednesday, July 2, 1980.

PLACE: Room 600, 1730 K Street NW., Washington, D.C.

STATUS: Open.

MATTERS TO BE CONSIDERED: The Commission will consider and act upon the following:

1. *Vess Hall* v. *Little T Coal Company*, Docket No. SE 79-119-D (Petition for Discretionary Review).

It was determined by a unanimous vote of Commissioners that Commission business required that a meeting be held on this item and that no earlier announcement of the meeting was possible.

CONTACT PERSON FOR MORE INFORMATION: Jean Ellen, 202-653-5632.

[S-1284-80 Filed 7-1-80; 2:31 pm]

BILLING CODE 6820-12-M

7

BOARD OF GOVERNORS OF THE FEDERAL RESERVE SYSTEM.

TIME AND DATE: 2 p.m., Tuesday, July 8, 1980.

PLACE: 20th Street and Constitution Avenue, NW., Washington, D.C. 20551.

STATUS: Closed.

MATTERS TO BE CONSIDERED:

1. Request by the Government Accounting Office for Board comment on a draft report on foreign banks operating in the U.S.
2. Proposed purchases, under competitive bidding, of computer equipment within the Federal Reserve System.
3. Review of stock holdings under Federal Reserve conflict of interest regulations.
4. Personnel actions (appointments, promotions, assignments, reassignments, and salary actions) involving individual Federal Reserve System employees.
5. Any agenda items carried forward from a previously announced meeting.

CONTACT PERSON FOR MORE INFORMATION: Mr. Joseph R. Coyne, Assistant to the Board (202) 452–3204.

Dated: June 30, 1980.

Griffith L. Garwood,

Deputy Secretary of the Board.

[S-1278-80 Filed 7-1-80; 9:48 am]

BILLING CODE 6210-01-M

8

NUCLEAR REGULATORY COMMISSION.

TIME AND DATE: Monday, July 7, 1980.

PLACE: Commissioners conference room, 1717 H Street NW., Washington, D.C.

STATUS: Open/closed.

MATTERS TO BE CONSIDERED:

10 a.m.

1. Time Reserved for Discussion of Management-Organization and Internal Personnel Matters (approximately 2 hours, closed—Exemptions 2 and 6).

2 p.m.

1. Discussion of Action Plan (chapter V) (approximately 2 hours, public meeting).

CONTACT PERSON FOR MORE INFORMATION: Walter Magee (202) 634–1410.

AUTOMATIC TELEPHONE ANSWERING SERVICE FOR SCHEDULE UPDATE: (202) 634–1498.

Those planning to attend a meeting should reverify the status on the day of the meeting.

Dated: June 30, 1980.

Roger M. Tweed,

Office of the Secretary.

[S-1285-80 Filed 7-1-80; 3:21 pm]

BILLING CODE 7590-01-M

9

UNITED STATES RAILWAY ASSOCIATION.

TIME AND DATE: 9 a.m., July 10, 1980.

PLACE: 955 L'Enfant Plaza North, SW., Board Room, room 2-500, fifth floor, Washington, D.C.

STATUS: Parts of this meeting will be open to the public. The rest of the meeting will be closed to the public.

MATTERS TO BE CONSIDERED BY THE BOARD OF DIRECTORS: Portions closed to the public (9 a.m.):

1. Consideration of internal personnel matters.
2. Litigation report.
3. Review of Conrail proprietary and financial information for monitoring and investment purposes.

Portions open to the public (11 a.m.):

4. Approval of minutes of the June 5, 1980 Board of Directors Annual Meeting.
5. Conrail Waiver of Financing Agreement.
6. Consideration of 211(h) Loan Program.
7. Delaware and Hudson Increase in Loan Application.
8. Missouri-Kansas-Texas Waiver of Loan Agreement.
9. Contract Actions (extensions and approvals).
10. Report on Conrail monitoring.

CONTACT PERSON FOR MORE INFORMATION: Alex Bilanow (202) 426–4250.

[S-1283-80 Filed 7-1-80; 12:50 pm]

BILLING CODE 8240-01-M

federal register

Thursday
July 3, 1980

Part II

Interstate Commerce Commission

Regulations Governing Procedures on Motor Carrier Entry

INTERSTATE COMMERCE COMMISSION

49 CFR Part 1047

[Ex Parte No. MC-75 (Sub-No. 2)]

Agricultural Cooperative Exemption

AGENCY: Interstate Commerce Commission.

ACTION: Final rules.

SUMMARY: The Commission is revising its regulations dealing with the exemption from economic regulation accorded to motor vehicles controlled and operated by an agricultural cooperative association or a federation of associations. Specifically, the Commission is raising the tonnage allowable in nonfarm-nonmember transportation. This action is being taken to bring the rules into conformance with recent statutory changes enacted in Section 24 of the Motor Carrier Act of 1980. The Commission is also updating the regulations by deleting reference to various sections of the former Interstate Commerce Act and replacing them with references to the corresponding section of the revised and amended Interstate Commerce Act (Subtitle IV of Title 49, United States Code, "Transportation," 49 U.S.C. 10101 et seq.)

EFFECTIVE DATE: August 4, 1980.

FOR FURTHER INFORMATION CONTACT:
Alan Rothenberg, phone 202-275-7350.
or
Donald J. Shaw, Jr., phone 202-275-7292.

SUPPLEMENTARY INFORMATION: Section 24 of the Motor Carrier Act of 1980 made some changes concerning the agricultural cooperative transportation exemption at 49 U.S.C. 10526(a)(5). It raised the allowable tonnage a cooperative association or federation may transport for a nonmember that is not a farmer, cooperative association, federation, or the United States Government from 15 to 25 percent of the total transportation of the cooperative association of federation in each fiscal year. The revised regulations here merely implement this numerical change in our agricultural cooperative rules at 49 CFR 1047.21.

The new legislation also expanded the recordkeeping, reporting, and enforcement powers of the Commission, and prescribed penalties for noncompliance. These areas are not being considered in this proceeding, although they may be the subject of a subsequent rulemaking proceeding.

The remainder of the changes made in the regulations are not substantive in nature and merely update the regulations by striking all references to sections of the former Interstate Commerce Act and substituting references to the appropriate sections of Subtitle IV of Title 49 of the United States Code.

Because the changes to the regulations are only technical, they will be adopted as final rules without notice and comment. Notice and public procedures are unnecessary in a case such as this and would serve only to delay bringing the rules into conformance with the applicable law.

This decision does not affect significantly the quality of the human environment or energy consumption.

It is ordered:

Sections 1047.20 through 1047.23 of the Code of Federal Regulations are revised as set forth in the appendix (only revised sections are listed).

This notice is issued under authority contained in 49 U.S.C. 10321 and 5 U.S.C. 553.

Decided: June 26, 1980.

By the Commission, Chairman Gaskins, Vice Chairman Gresham, Commissioners Stafford, Clapp, Trantum, Alexis and Gilliam.

Agatha L. Mergenovich,
Secretary.

Appendix—Revisions of 49 CFR Part 1047

§ 1047.20 [Amended]

(1) In § 1047.20, paragraphs (a), (b) and (e) are revised to read as follows:

(a) *Cooperative Association.* (No change until last paragraph which is revised as follows:) Associations which do not conform to such definition are not eligible to operate under the partial exemption of 49 U.S.C. 10526(a)(5);

(b) *Federation of cooperative associations.* (No change until last sentence which is revised as follows:) Federations of cooperative associations which do not conform to such definition are not eligible to operate under the partial exemption of 49 U.S.C. 10526(a)(5).

* * * * *

(e) *Interstate transportation.* The term "interstate transportation" means transportation by motor vehicle in interstate or foreign commerce subject to the Commission's jurisdiction as set forth in 49 U.S.C. 10521.

* * * * *

(2) In § 1047.21, the introductory text, and paragraph (b) are revised to read as follows:

§ 1047.21 Computation of tonnage allowable in nonfarm-non-member transportation.

Interstate transportation performed by a cooperative association or federation of cooperative associations for nonmembers who are not farmers, cooperative associations, or federations of associations or the United States Government for compensation, (except transportation otherwise exempt under Subchapter II, Chapter 105, Subtitle IV of Title 49 of the United States Code) shall be limited to that which is incidental to its primary transportation operation and necessary for its effective performance. It shall in no event exceed 25 percent of its total interstate transportation services in any fiscal year, measured in terms of tonnage. A cooperative association or federation of cooperative associations may transport its own property, it members' property, property of other farmers and the property of other cooperatives or federations in accordance with existing law, except where the provisions of § 1047.22 may be applicable to the limit on member/nonmember transportation.

* * * * *

(b) The base tonnage to which the 25-percent limitation is applied is all tonnage of all kinds transported by the cooperative association or federation of cooperative associations in interstate or foreign commerce, whether for itself, its members or nonmembers, for or on behalf of the United States or any agency or instrumentality thereof, and that performed within the exemption provided by 49 U.S.C. 10526(a)(5).

(3) In § 1047.22, paragraph (b) is revised to read as follows:

§ 1047.22 Nonmember transportation limitation and recordkeeping.

* * * * *

(b) *Records of interstate transportation when nonmember transportation is performed.* Any cooperative association or federation of cooperative associations performing interstate transportation for nonmembers and required to give notice to this Commission under § 1047.23 shall prepare and retain for a period of at least two years written records of all interstate transportation performed for members and nonmembers. These records shall contain (1) the date of the shipment, (2) the names and addresses of the consignor and consignee, (3) the origin and destination of the shipment, (4) a description of the articles in the shipment, (5) the weight or volume of the shipment, (6) a description of the

equipment used either by unit number or license number and, in the event this equipment is nonowned, the name and address of its owners and drivers, (7) the total charges collected, (8) a copy of all leases executed by the cooperative association or federation of cooperative associations to obtain equipment to perform transportation under 49 U.S.C. 10526(a)(5), (9) whether the transportation performed is (i) member transportation, (ii) nonmember transportation for nonmembers who are farmers, cooperative associations, or federations thereof, (iii) other nonmember transportation, and if of class (iii), how the transportation was incidental and necessary as defined in § 1047.21(a).

(4) Section 1047.23 is revised to read as *follows:*

§ 1047.23 Notice to the Commission.

A cooperative association or federation of cooperative associations which performs or proposes to perform interstate transportation for nonmembers, who are not farmers, cooperative associations, or federations of cooperative associations, under 49 U.S.C. 10526(a)(5) and (c) (which transportation is not otherwise exempt under Subchapter II, Chapter 105, Subtitle IV of Title 49 of the United States Code) shall notify the Commission of its intent to perform transportation. Notification shall be given prior to the commencement of operations and shall be in the form, contain the information, and be served in the manner called for in Form BOp 102. Notice must be filed with the Commission annually, within 30 days of its annual meeting. Following the receipt of a properly completed Form BOp 102, the information will be published in the Federal Register and put in a central file at the Commission, as public notice of the intent of the agricultural cooperative association or federation of cooperative associations to conduct interstate for-hire transportation for nonmembers under 49 U.S.C. 10526(a)(5). The information requested is of a continuing nature, and any changes in the information concerning officers, directors, and location of transportation records in the notice on file shall be brought to the Commission's attention by the filing of a supplemental form BOp 102 within 30 days of the change. Forms which are incomplete or not properly notarized will be rejected.

[FR Doc. 80-19934 Filed 7-02-80; 8:45 am]

BILLING CODE 7035-01-M

49 CFR Parts 1011, 1101, 1131

[Ex Parte No. MC-67 (Sub-No. 9)]

Revised Temporary Authority Rules

AGENCY: Interstate Commerce Commission.

ACTION: Final rules.

SUMMARY: Section 23 of the "Motor Carrier Act of 1980" has made changes in Section 10928 of Title 49, United States Code, which require a revision of the rules affecting the *duration* of (but not the substantive criteria governing) temporary authority and emergency temporary authority for motor carriers of property. To implement the changes, the Commission will now, where appropriate, grant a motor carrier of property temporary authority (TA) for a period of not more than 270 days. Similarly the Commission will grant a motor carrier of property emergency temporary authority (ETA) for not more than 30 days and may extend such authority for a period of not more than 90 additional days. Notice and comment is unnecessary under 5 U.S.C. 553(b)(B), since the revised rules implement the Congressional mandate in the Act. The presently applicable rules for motor carriers of passengers and water carriers are unchanged.

In addition, the rules shift appellate jurisdiction from individual Commissioners as provided in 49 CFR 1011.5(c) to the Review Boards. The rules also abolish the Motor Carrier Board and shift its transfer functions under 49 CFR 1011.6(b) (4) and (5) to the Review Boards. These functions, as renumbered, will then appear under 49 CFR 1011.6(f). Notice and comment is unnecessary, since this is authorized under the Commission's delegation power and pertains to rules of agency organization, procedure, or practice. 5 U.S.C. 553(b)(A).

EFFECTIVE DATE: July 3, 1980.

FOR FURTHER INFORMATION CONTACT:

Paul Grossman, 202-275-7911.
Jane Alspaugh, 202-275-4561.
Donald J. Shaw, Jr., 202-275-7292.

SUPPLEMENTARY INFORMATION: The changes adopted here are (1) required by amendment to 49 U.S.C. 10928 or (2) exercise of the Commission's authority to delegate certain functions to employee boards. Consequently, public comment is unnecessary and thus not required under 5 U.S.C. 553(b) (A) and (B).

The decisional function on temporary authority and emergency temporary authority matters has already been shifted to the Regional Motor Carrier Boards. Appeals from those decisions will be normally assigned to Review Boards, subject to the normal certification and recall procedures to the Divisions or the Commission. Similarly, the revocation function is now vested in an employee board in the Office of Consumer Protection. With the shift of the finance functions to Review Boards, there remain no functions vested in the Motor Carrier Board, and we are eliminating its jurisdiction accordingly.

This action will not affect significantly the quality of the human environment or conservation of energy resources.

It is ordered:

We adopt the revisions in 49 CFR Parts 1011, 1101, and 1131 set forth in the appendix to this notice.

Issued under the authority of 49 U.S.C. 10305, 10321, 10322, and 10928, and 5 U.S.C. 553.

Decided June 27, 1980.

By the Commission, Chairman Gaskins, Vice Chairman Gresham, Commissioners Stafford, Clapp, Trantum, Alexis and Gresham. Commissioners Stafford and Clapp dissented in part with separate expressions.

Agatha L. Mergenovich;

Secretary.

Commissioner Stafford (Dissenting, in Part)

Today's decision will effectively deprive a member of the Commission from any meaningful participation in the important ETA/TA processes of the Commission. Since these informal procedures are not subject to the GTI provisions, 49 CFR 1100.97(h)(2), the interested public will rarely, if ever, be able to bring important matters involving an ETA/TA to the attention of the Commission. Clearly, accountability and responsibility cannot be delegated and it follows that they cannot be exercised in a vacuum.

Accordingly, I would retain the present system in which an appeal is handled by a single Commissioner.

Commissioner Clapp (Dissenting in Part)

While I do not object to the provisions of the rulemaking notice which terminate the authority of individual Commissioners over the ETA/TA appellate process, I do not believe that this authority should be vested with the Review Boards or that the Motor Carrier Board should be abolished as further provided in the rulemaking notice. In fact, I believe the elimination of the Board would be shortsighted and not in the best interests of the Commission and the public.

I see several advantages to retention of the Motor Carrier Board. It has a long experience, considerable expertise, and a clear perception of ETA/TA criteria and decision-making: it has worked closely with (and even trained) the six Regional Motor Carrier Boards which have initial jurisdiction over ETA's and TA's and it has the confidence of the public and the motor carrier industry.

I believe the appeals function should be transferred to the Motor Carrier Board which has the expertise to handle it most effectively rather than to the Review Boards.

The legislative change in 49 U.S.C. 11343(d)(1) (Section 18 of the Motor Carrier

Act of 1980) will significantly increase the number of "transfer applications," jurisdiction of which now lies with the Motor Carrier Board. This change increases the revenue ceiling (from $300,000 to $2 million) which exempts motor carrier mergers from the requirements of 49 U.S.C. 11343. I might add that the existing Transfer Rules (49 CFR Part 1132) were co-authored by two present members of the board, and that is the group best equipped to deal with them.

These two responsibilities—appeals and transfer applications—lodged in the Board would provide it with a full workload and would result in the subjects involved being handled by experts.

Finally, while I am encouraged by plans to broaden the use of paralegals at the Commission, an important positive side effect of retention of the Motor Carrier Board would be the continuation of an important advancement opportunity for paralegals with special meaning: the chance to serve as a decision-maker on a body with Board status.

In my opinion, dispersal of the Motor Carrier Board expertise is unwise. I would continue its jurisdiction over transfer applications under 49 U.S.C. 10926 and shift ETA/TA appellate jurisdiction to it.

PART 1011—COMMISSION ORGANIZATION; DELEGATION OF AUTHORITY

Appendix

§ 1011.5 [Amended]

1. Delete 49 CFR 1011.5(c) and renumber 49 CFR 1011.5(d) as 49 CFR 1011.5(c).

§ 1011.6 [Amended]

2. Add 49 CFR 1011.6(g)(3) as follows:

* * * * *

(g) * * *

(3) Appeals from decisions of the Regional Motor Carrier Boards entered under 49 U.S.C. 10928.

* * * * *

3. Renumber present 49 CFR 1011.6(b)(4) as 49 CFR 1011.6(g)(4).

4. Renumber present 49 CFR 1011.6(b)(5) as 49 CFR 1011.6(g)(5).

5. Delete the remaining subsections in 49 CFR 1011.6(b) in their entirety.

6. Renumber 49 CFR 1011.6 (c), (d), (e), (f), (g), (h), (i), (j), (k) and (l) as 49 CFR 1011.6 (b), (c), (d), (e), (f), (g), (h), (i), (j) and (k) respectively. Change the reference to paragraph (h) in the introductory paragraph under 49 CFR 1011.6 to read "Except as provided in paragraph (g) * * *". Change the reference to paragraph (g)(2) in renumbered 49 CFR 1011.6(f)(1) to read "Except as provided in paragraph (f)(2) * * *".

PART 1101—TEMPORARY OPERATING AUTHORITIES AND APPROVALS

§ 1101.2 [Amended]

7. Amend 49 CFR 1101.2(c) to read as follows:

* * * * *

(c) *"Aggregate of 180 days."* The total number of days of temporary authority which may be granted to a motor carrier of passengers under the provisions of 49 U.S.C. 10928(a). As used in this part, the term "a period of 180 days" or "aggregate of 180 days" or terms having a similar meaning will be construed to mean 270 days insofar as they apply to motor carriers of property and thus define the total number of days of temporary authority which may be granted to a motor carrier of property under the provisions of 49 U.S.C. 10928(b).

PART 1131—TEMPORARY AUTHORITY APPLICATIONS UNDER SECTION 210a(a) OF THE INTERSTATE COMMERCE ACT

§ 1131.1 [Amended]

8. Amend 49 CFR 1131.1(b)(4) to read as follows:

* * * * *

(b) * * *

(4) *"Aggregate of 180 days."* The total number of days of temporary authority which may be granted to a motor carrier of passengers under the provisions of 49 U.S.C. 10928(a). As used in this part, the term "a period of 180 days" or "aggregate of 180 days" or terms having a similar meaning will be construed to mean 270 days insofar as they apply to motor carriers of property and thus define the total number of days of temporary authority which may be granted to a motor carrier of property under the provisions of 49 U.S.C. 10928(b).

§ 1131.2 [Amended]

9. Amend 49 CFR 1131.2(d)(2) to read as follows:

* * * * *

(d) * * *

(2) Where the emergency is found to continue beyond the period of the initial 30 day grant, the emergency temporary authority may be extended until disposition is made of the longer temporary authority application. In no event may a 30 day grant of emergency temporary authority of a motor carrier of property be extended for a period of more than 90 additional days.

[FR Doc. 80-19935 Filed 7-2-80; 8:45 am]
BILLING CODE 7035-01-M

49 CFR Parts 1002, 1136

[Ex Parte No. MC-122 (Sub-No. 1)]

Implementation of Intercorporate Hauling Reform Legislation

AGENCY: Interstate Commerce Commission.

ACTION: Notice of interim rules and request for comments.

SUMMARY: Congress has adopted legislation which allows related but separately incorporated members of the same corporate family to provide transportation service for each other and to charge for that service without obtaining a license from the Commission, subject to certain conditions and limitations. The Commission has initiated this proceeding to consider procedures under which statutory notice requirements may be satisfied and to otherwise implement Section 9 of the "Motor Carrier Act of 1980".

Because the Act goes into effect upon enactment, we are publishing these as interim rules to be used until final rules are adopted. Comments are requested on the feasibility of these interim rules as final rules.

DATES: Effective date: July 3, 1980. Written comments should be filed with the Commission on or before August 4, 1980.

ADDRESSES: Send an original and, if possible, 15 copies of comments to: Ex Parte No. MC-122 (Sub-No. 1), Rm. 5416, Office of Proceedings, Interstate Commmerce Commission, Washington, DC 20423.

FOR FURTHER INFORMATION CONTACT:
Melvin B. Werner, (202) 275-7987,
or
Donald J. Shaw, Jr., (202) 275-7292.

SUPPLEMENTARY INFORMATION: "Intercorporate Hauling" as used here refers to transportation performed for compensation by one corporate entity for another affiliated or separately incorporated entity (be it a parent, a subsidiary, or otherwise affiliated corporation).

The Commission adopted the policy early in the history of regulation that compensated intercorporate hauling (CIH) is not legitimate private carriage (and thus exempt from regulation), but rather, is for-hire transportation subject to the licensing provisions of the Interstate Commerce Act. The policy against CIH performed without authority from the Commission stemmed from the Commission's interpretation of statutory provisions now codified in subsections (4), (5), and (13) of section 10102, of subtitle IV, Title 49, U.S. Code (the

Interstate Commerce Act), which, respectively define common, contract, and private carriage. The Commission essentially declined to pierce the corporate veil to consider the business of the corporate family, in general, to be the primary business of the corporate entity intending to provide CIH. *Enterprise Trucking Corp. Contract Carrier Application*, 27 M.C.C. 264 (1941); *Lee Wilson & Co., Contract Carrier Application*, 29 M.C.C. 525 (1941); *Lukens Steel Co. Contract Carrier Application*, 42 M.C.C. 672 (1943); *Schenley Corp.* v. *United States*, 326 U.S. 432 (1946); and *Petition for Declaratory Order Regarding Intercorporate Parent-Subsidiary Transportation*, 123 M.C.C. 268 (1975). The result was that, while a single corporation could perform for-hire service for separate operating divisions, conglomerates could perform such service for and among their components only on a gratuitous basis.

The "Motor Carrier Act of 1980," changes this rule in new 49 U.S.C. 10524(b). It provides that the Commission does not have jurisdiction over CIH operations, subject to certain notice and publication requirements which appear in 49 U.S.C. 10524(b) (1), (2), (3), and (4). A limitation is also imposed in 49 U.S.C. 10524(b)(2), which allows CIH operations only among corporations where the parent directly or indirectly owns a 100-percent interest in each participating subsidiary. New subsection 10524(c) provides that corporations which are related by reason of the 100-percent parent-subsidiary ownership constitute a "corporate family". Finally, the definition of "motor private carrier" in 49 U.S.C. 10102(13) is modified to include operations by "corporate families" as well as by other persons.

This proceeding is being instituted to implement the notification requirements of new 49 U.S.C. 10524(b) (1) and (2). It also considers a substantive question which requires resolution.

Discussion

Procedural Matters

The statute imposes on the Commission a requirement that it publish notice in the Federal Register within 30 days of receipt of notice from a corporation that a "corporate family" intends to engage in CIH. In view of these time constraints, it appears that a uniform format would facilitate prompt publication. We have had considerable success in requiring carriers seeking the right to perform for-hire motor carrier service to prepare caption summaries for the Commission to publish. A similar approach would be suitable for the notice under consideration here. The proposed regulations, therefore, specify the content and format of the notice.

We anticipate that the composition of corporate families, as that term is defined in 49 U.S.C. 10524(c), will occasionally fluctuate. Our understanding of the terms of 49 U.S.C. 10524(b) is that the requirement of notification also applies to any after-acquired subsidiaries not named in an original notice but which intend to participate in CIH. We believe these new members added to a statutory "corporate family" must be subsequently identified to the Commission and notice published in the Federal Register. This view is consistent with requirements in 49 U.S.C. 10524(b)(4) that a list of qualified corporate members be carried in all vehicles used in CIH operations.

Periodic updating would also assist enforcement officials who may be concerned with the continuing qualification of a given subsidiary to use or to provide CIH operations. For this reason we propose to require a corporation to advise the Commission when its interest in a subsidiary named in a prior notice becomes less than 100 percent.

The proposed rules require submittal of an accurate and complete listing whenever there is a change in the qualified corporate participants. We considered requiring notice only of the added or deleted member, but believe that enforcement officials should be able to see a consolidated accurate list. Further a series of changes would require carrying a potentially large quantity of addenda in the cab of each vehicle. Comments are invited as to the method which would be least burdensome to the public.

It appears that Congress intended for the Commission to publish CIH notices as an accommodation to the public, and to aid enforcement. We interpret this as purely ministerial function and we will not maintain extensive records in regard to the filings.

Draft regulations set out in the appendix specify that no proceeding will be initiated by the filing of a CIH notice, and that no right of protest arises upon publication in the Federal Register. Corporations initiating CIH operations will remain subject to penalties for filing information which is incorrect (18 U.S.C. 1001).

A final procedural provision establishes fees pertaining to the initial and updating notices described above, as required by 31 U.S.C. 483a. The proposed fee is equivalent to those now applicable for similar registration processes.

Substantive Matters

It is necessary to address one substantive area of concern. Questions may arise as to the lawfulness of CIH operations where subsidiaries are set up specifically to provide transportation services for their parent or corporate affiliates. These have historically been prohibited unless they obtain authority from the Commission as for-hire carriers. See *Schenley, supra*. In view of the change made by Congress in the definition of private carriers in 49 U.S.C. 10102(13), we do not believe the legislative language precludes a subsidary's being specifically established for this purpose, and no regulations are proposed in regard to these situations.

This action does not appear to affect significantly the quality of the human environment or conservation of energy resources. It merely proposes registration rules whose implementation has been ordered by Congress. However, anyone may comment on this aspect of the proposal.

Accordingly, we proposed to revise Title 49 of the Code of Federal Regulations by the addition of the provisions set out in the appendix to this notice.

The rules set out in the appendix will also be used by the Commission on an interim basis. The Commission is faced with an impracticable situation in which the due and required execution of the agency functions would be prevented by undertaking a rule-making proceeding prior to the adoption of any rules. Thus, notice and comment for these interim rules are not required under 5 U.S.C. 553(b)(B). Public comments are invited on these interim rules as a basis for final rules, however. We shall act as fast as possible on formulating final rules.

This notice of proposed rulemaking is issued under authority of 49 U.S.C. 10321 and 5 U.S.C. 553. Dated: June 26, 1980.

By the Commission Chairman Gaskins, Vice Chairman Gresham, Commissioners Stafford, Clapp, Trantum, Alexis and Gilliam.

Agatha L. Mergenovich,

Secretary.

Appendix—Interim and Proposed Rules Implementing Compensated Intercorporate Hauling Provisions of "Motor Carrier Act of 1980"

In 49 CFR Chapter X, a new Part 1136 is added to read as follows:

PART 1136—COMPENSATED INTERCORPORATE HAULING OPERATIONS

Sec.
1136.1 Scope.
1136.2 Applicability.
1136.3 Notification.
1136.4 Change(s) in participation in intercorporate hauling.

Authority: 49 U.S.C. 10321 and 5 U.S.C. 553.

§ 1136.1 Scope.

Compensated transportation service by a member of a corporate family for other members of the same corporate family ("Incorporate Hauling") is exempt from Commission regulation subject to certain notice requirements. To qualify for the exemption, companies must be members of the corporate family in which the parent owns, directly or indirectly, 100 percent interest in the subsidiaries. These regulations prescribe procedures for compliance with the notice requirements of 49 U.S.C. 10524(b) and (c).

§ 1136.2 Applicability.

Motor carrier service under this exemption may be performed as soon as the notice required by these rules is filed with the Commission. Mailing must be by certified mail.

§ 1136.3 Notification.

(a) *General requirements*—Whenever a coporation seeks to initiate compensated intercorporate hauling it shall be necessary for the corporation to prepare a Federal Register notice in accordance with the following format:

Notice of Intent To Engage in Compensated Intercorporate Hauling Operations

This is to provide notice as required by 49 U.S.C. 10524(b)(1) that the named corporations intend to provide or to use compensated intercorporate hauling operations as authorized in 49 U.S.C. 10524(b).

1. Parent corporation and address of principal office:

2. Wholly-owned subsidiaries which will participate in the operations, and address of their respective principal offices:

(a)
(b)
(c)

(b) *Parties subject to requirements*—All notices must be submitted by the parent of the corporate family, by or for whose members proposed compensated intercorporate hauling operations are to be performed.

(c) *Affidavit*—The notice shall include the following affidavit from a person legally qualified to act on behalf of the parent:

"I affirm that is a corporation which directly or indirectly owns a 100-percent interest in the subsidiaries participating in compensated intercorporate hauling under 49 U.S.C. 10524(b), listed in the attached notice.

(d) *To whom notice sent*—Secretary, Interstate Commerce Commission, Washington, DC 20423.

(e) *Miscellaneous*—The filing of a CIH notice does not initiate a proceeding before the Commission nor is any right of protest created by publication of a notice in the Federal Register; publication is a ministerial function and does not indicate Commission investigation or affirmation of the representations appearing in the notice concerning corporate affiliations.

§ 1136.4 Change(s) in participation in intercorporate hauling.

(a) If the parent intends that an additional subsidiary participates in the compensated intercorporate hauling, it must file an updated notice.

(b) Whenever the interest which a corporation owns in a subsidiary participating in compensated intercorporate hauling becomes less than 100 percent, operations under 49 U.S.C. 10524(b), by or for that subsidiary, must be discontinued at once, and the parent must file an updated notice within 10 days.

(c) Updated notices will be subject to publication in the Federal Register and must be submitted in the format prescribed in subsection 1136.4(a).

PART 1002—FEES

49 CFR Part 1002 Fees.

Section 1002.2 Filing Fees is amended as follows:

(1) In paragraph (c) new material is added to the end of subparagraph (1). As amended, paragraph (c)(1) reads as follows:

§ 1002.2 Filing fees.

* * * * *

(c) *Related or consolidated proceedings.* (1) Separate fees need not be paid on related applications filed by the same applicant which would be the subject of one proceeding, such as a single petition for modification of more than one certificate or permit held by the same person; a related plan of track relocation, joint use, purchase of trackage rights, and issuance of securities; a section 5 motor common carrier acquisition application combined with a related section 207 application for a certificate of public convenience and necessity; or the like. In such instances, the only fee to be accessed will be that applicable to the embraced proceeding which carries the highest filing fee as listed in paragraph (b) of this section; except that, directly related applications involving a transfer under section 206(a)(6) or section 212(b), and an application on Form OP-OR-9 for gateway elimination and/or a conversion, the sole fee shall be the basic fee for the transfer application. Each filing of an original or updated notice of intent to engage in compensated intercorporate hauling operations shall be considered a separate filing, and shall be subject to payment as described in paragraph (d) of this section.

* * * * *

(2) In Part IV under paragraph (d), a new item (45) is added to read as follows:

* * * * *

(45) A notice required by 49 U.S.C. 10524(b) to engage in compensated intercorporate hauling. $150

[FR Doc. 80-19936 Filed 7-2-80; 8:45 am]
BILLING CODE 7035-01-M

---

49 CFR Part 1004

[Ex Parte No. 55 (Sub-No. 42)]

Deletion of Dual Operations Policy

AGENCY: Interstate Commerce Commission.

ACTION: Deletion of rule.

SUMMARY: The "Motor Carrier Act of 1980" amended Section 10930(a) of Title 49, United States Code, deleting statutory prohibitions against the dual holding of both motor common and contract carrier operating authority. The Commission's policy statement in 49 CFR 1004.3 regarding these dual operations is now obsolete and will be deleted. For this reason, comments are not necessary, see 5 U.S.C. 553(b)(B).

EFFECTIVE DATE: July 3, 1980.

FOR FURTHER INFORMATION CONTACT:
David Wuehrmann, 202-275-7967
or
Peter Metrinko, 202-275-7885.

SUPPLEMENTARY INFORMATION: This action is required by amendment to 49 U.S.C. 10930(a). Public comment is unnecessary and thus not required, 5 U.S.C. 553(b)(B).

§ 1004.3 [Deleted]

Accordingly, 49 CFR 1004.3 is deleted.

This action will not affect significantly the quality of the human environment or conservation of energy resources.

Issued under the authority of 49 U.S.C. 10321 and 5 U.S.C. 553.

Decided: June 26, 1980.

By the Commission, Chairman Gaskins, Vice Chairman Gresham, Commissioners Stafford, Clapp, Trantum, Alexis and Gilliam.

Agatha L. Mergenovich,
Secretary.

[FR Doc. 80-19937 Filed 7-2-80; 8:45 am]
BILLING CODE 7035-01-M

49 CFR Part 1100

[Ex Parte No. 55 (Sub-No. 44)]

Rules Governing Applications Filed by Motor Carriers

AGENCY: Interstate Commerce Commission.

ACTION: Notice of interim rules and request for comments.

SUMMARY: "The Motor Carrier Act of 1980" ("The Act") has changed a number of statutory provisions affecting the Commission. These changes include requiring expedited procedures for processing certain motor carrier finance applications. To comply with The Act we must revise the regulations governing the processing of applications filed by motor carriers (1) to consolidate, purchase, merge, or lease operating rights and properties, or to acquire control of motor carriers pursuant to 49 U.S.C. 11343 and 11344, and (2) to be granted temporarily authority to engage in operations under 49 U.S.C. 11349 corresponding to permanent authority which is sought under 49 U.S.C. 11343 and 10926. These rules would require directly related applications to be filed at the same time as the finance application.

In addition, certain minor revisions are required in the pertinent application forms so that they will correspond to the revised regulation. Because the Act goes into effect upon enactment, we are publishing these as interim rules to be used until final rules are adopted. Comments are requested on the feasibility of these interim rules as final rules.

DATES: Effective date: July 3, 1980. Comments should be submitted August 18, 1980.

ADDRESSES: An original and 15 copies, if possible, should be sent to: Ex Parte No. 55 (Sub-No. 44), Room 5414, Interstate Commerce Commission, Washington, D.C. 20423.

FOR FURTHER INFORMATION CONTACT:
Richard Kelly, (202) 275-7245.
Eliot Horowitz, (202) 275-7657.
Bruce Kasson, (202) 275-7655.

SUPPLEMENTARY INFORMATION: The Motor Carrier Act of 1980 ("Act") includes statutory time frames for all non-rail proceedings within which an appropriate decisional body of this Commission must make an initial decision. (See 49 U.S.C. 10322 and 11345a). We are revising 49 CFR 1100.240 to insure that cases filed under 49 U.S.C. 11344 and 11349 are decided within these designated time periods. The revisions expedite the submission and handling of evidence in affected finance proceedings. The substance of the evidence submitted by the persons in these proceedings and the manner in which it is weighed by the Commission remains unchanged. This proceeding will not deal with appellate procedures.

The Revisions Proposed

Appendix A to this notice lists a proposed and interim version of the rules of practice which govern permanent applications filed by motor carriers under 49 U.S.C. 11343 and 11344 and for temporary authority to provide operations under 49 U.S.C. 11349 corrsponding to those for which permanent authority is sought under 49 U.S.C. 11343 and 10926.

Appendix B sets forth revised instructions to application forms OP-F-44, OP-F-45, and OP-F-46.

Interim Use of Rules

These rules will be used by the Commission on an interim basis. The Commission is faced with an impracticable situation in which the due and required execution of the agency functions would be prevented by undertaking a rulemaking proceeding prior to the adoption of any rules. Thus, notice and comment for these interim rules are not required under 5 U.S.C. 553(b)(B). Public comments are invited on these interim rules as a basis for final rules. We shall act as fast as possible on formulating final rules.

Imposed Time Limits

The new statute at 49 U.S.C. 11345a requires the Commission to publish notice of an application filed by a motor carrier under 49 U.S.C. 11343 in the Federal Register within 30 days from the date of its filing. Incomplete applications must be rejected by order of the Commission within the same time frame.

Once an application is published written comments about it must be received by the Commission within the following 45 day period.The Commission must conclude all evidentiary proceedings within 240 days from the Federal Register publication and render a final decision within the next 180 day period.

These time limits impel us to require that the applicant file all of its evidence at the inception of the application, and that protestants file their complete evidence in response. It is the Commission's policy to use the modified procedure where at all possible. The revised regulation at 49 CFR 1100.240 provides for the completion of the evidentiary record in cases handled under the modified procedure within 60 days from the date upon which notice of a proposed transaction is published in the Federal Register. This is so regardless of whether an application is opposed. Once the evidentiary record is completed, an appropriate decisional body will decide the application.

Summary of Revisions

The revisions proposed here fall into five general categories. These are summarized separately.

§ *1100.240(A) Filing of Applications Under 49 U.S.C. 11343 and 11344*

Applicants seeking authority to consolidate, merge, purchase, or lease operating rights of a motor carrier use application form OP-F-44. Those seeking to acquire control of a motor carrier through ownership of stock, or otherwise, use application form OP-F-45. Each of these application forms currently elicits from applicants all of the information necessary for the Commission to decide a case. Consequently, under the revised procedures, these forms require only some nonsubstantive modification. However, it is imperative that applicants carefully complete the application forms since failure to do so will result in the rejection, dismissal, or denial of a proposal.

In the past, Commission personnel have expended time and effort in helping persons to cure defects in improperly filed applications before their publication in the Federal Register. Given the time constraints placed on the Commission by the Act, assistance can no longer be made available subsequent to the filing of an application. Any questions relating to an application form should be resolved, with Commission staff assistance if necessary, prior to the filing of an application.

This change in procedure will result in the prompt Federal Register publication of proposed finance transactions. Prior to publishing a proposed transaction, Commission staff will correct only minor errors in an application. This may occur without contacting applicant's representatives.

A second change in the procedure concerns the filing of applications (other than applications for temporary authority) directly related to the finance transaction. These are applications filed under other sections of the Act which either directly affect or are directly affected by the finance transaction. Hereafter, these applications must be filed concurrently with the finance proposal. Directly related applications will continue to be handled in the Section of Finance, and, wherever possible, decided in a consolidated proceeding.

This simultaneous filing requirement will insure that directly related proposals are also decided within the time frames established under the Act. The procedural time frames for the submission of written comments to a published operating authority, see application Ex Part No. 55 (Sub-No. 43), *Rules Governing Application for Operating Authority*, parallel those relating to finance transactions.

For purposes of this provision, an application filed under 49 U.S.C. 11349, seeking temporary authority, is *not* deemed a directly related proposal. Proposals for temporary authority may be filed subsequent to the filing of permanent finance applications. The procedures relating to temporary authority applications are set forth at 49 CFR 1100.240(E) infra.

Also, the new procedures preclude a person from making amendments to a proposal once it is published in the Federal Register. We are opposed to the amendment process as a device for limiting opposition to an application rather than as a method of determining the needs of the affected shipping public. Moreover, the amendment process has created an administrative burden on the Commission. This procedural change also underlines the need for persons to consider carefully the scope of proposed transactions before filing applications with the Commission.

Finally, the revised procedures eliminate the Commission's service of a "designation" or "modified procedure" order on the parties to a proceeding. Except for submitting a reply statement (at its option and only in an opposed proceeding), an applicant is required to submit all evidence along with the application form. Supporting statements must be verified, except for those which consist wholly of legal argument. Under these revised procedures the Commission will continue to employ the "decision-notice" format adopted by the Commission in *Summary Grant Procedures (Finance)*, 44 FR 41203 (July 16, 1979.)

§ 1100.240(B) . How to Oppose Finance Applications

Under the revised procedures, protestants must submit to the Commission all of their evidence in opposition to a finance application within 45 days from the date notice of a proposed transaction appears in the Federal Register. The protest and any accompanying statements in support (other than those consisting of legal argument only) must be verified. Furthermore, a copy must be served upon applicants' representatives. Finally, any request for oral hearing must be included with the protest.

In addition to the Federal Register publication, a copy of the entire application will be available for inspection by potential protestants at the Commission's offices in Washington, D.C. or the regional office of each applicant's domicile. The revised rules provide that an applicant has an obligation to serve a copy of its application on any person submitting a $10.00 fee to applicant to help defray reproduction expenses.

We believe that the availability of the application at the regional offices and the Commission's Washington, D.C. offices should satisfy the interests of most persons. Those persons wishing to receive their own copies of the application should be willing to pay the nominal fee to the applicant to help defray reproduction expenses.*

We are here faced with a difficult situation. The time limits imposed by the Act require that applicant submit its entire application package upon filing. We request comments as to any other method by which interested persons can receive copies of the application without unduly burdening the applicant. It would be an unfair expense burden on the applicant to require it to send copies of the application to the merely curious. We ask whether requiring the applicant(s) to make a copy of the application available for inspection at their primary places of business, and at the offices of their representatives, would completely satisfy the needs of potential protestants, in lieu of the interim procedure.

If the potential protestant desires to receive a copy of the application under the interim rule in an expedited manner, we encourage the persons involved to make informal arrangements, such as including postage for express mail delivery.

Although the time period relating to the filing of evidence in opposition to an application has been altered, the nature of the submission has not. The new format neither modifies any existing decisional standards nor imposes restrictions upon the substance of the evidence offered by a protestant.

* In addition, the Commission is aware that a member of "watching" services will provide copies of applications at a modest fee. We believe our approach, coupled with the availability of these watching services, is consistent with the Congressional concern that undue notice burden not be placed on applicants. See, in this connection, statement of Senator Packwood, 49 Cong. Rec. S. 7685 (daily ed. June 20, 1980).

§ 1100.240(C) Procedures Relating to Oral Hearing

The small revisions to procedures concerning oral hearings also reflect the Commission's need to expedite its proceedings. Where the Commission deems a case suitable for hearing, it will promptly notify the parties. Any person having an emergency need for changing the scheduled time and/or place of hearing must immediately notify the Commission.

§ 1100.240(D) General Rules Governing Applications Filed Under 49 U.S.C. 11343 and 11344

We propose to adopt more stringent rules with regard to requests for extensions of time. The imposition of statutory deadlines requires that the ICC, the industry, and the practicing bar work harder to meet deadlines. A three working day extension of time maximum should act as a buffer in emergency cases.

§ 1100.240(E) Processing of Applications Filed for Temporary Authority Corresponding to Applications Filed Under 49 U.S.C. 11344 or 10926

The regulation at 49 CFR 1100.240 governs, in part, the processing of temporary authority applications corresponding to finance proposals. These are presently handled expeditiously and do not require modification to meet time frames imposed by the revised Act. Nonetheless, we have taken this opportunity to simplify these rules.

Revisions to Application Form Instructions

Since the revised rules do not alter the nature of the information required of applicants in motor carrier finance cases, no substantive changes are required to forms OP-F-44, 45, or 46. However, some modification of the instructions to the forms is required to reflect procedural changes.

Initially, please note that the same instructions are applicable to forms OP-F-44 and 45. The revised instructions affect 5 of the 13 enumerated instructions currently appearing on OP-F-45. These concern (a) application copies, (b) amendments, (c) hearing procedures, (d) directly related applications, and (e) the Federal Register summary. The revised instruction sheet which appears in Appendix B will hereafter appear on forms OP-F-44 and 45.

Finally, we have made a single revision to the instructions accompying form OP-F-46 which clarifies the

manner in which interested persons are afforded notice of the filing of temporary authority applications.

Summary

We propose to adopt the revisions as set forth in Appendices A and B, and we will operate under these rules until further notice.

This proposed action does not appear to affect significantly the quality of the human environment or the conservation of energy resources. The interim adoption and our proposal of these rules is required to carry out the purpose, finding, and changes made by the Motor Carrier Act of 1980.

These actions are taken under the authority of 49 U.S.C. 10321 and 5 U.S.C. 553.

Decided: June 26, 1980.

By the Commission, Chairman Gaskins, Vice-Chairman Gresham, Commissioners Stafford, Clapp, Trantum, Alexis, and Gilliam.

Agatha L. Mergenovich,

Secretary.

Appendix A

§ 1100.240 [Reserved]

Section 1100.240 Rules governing applications by motor carriers under 49 U.S.C. 11344 and 11349 is reserved.

Introduction

These rules govern the processing of motor carrier *finance* applications to consolidate, purchase, merge, or lease operating rights and properties, or acquire control of motor carriers pursuant to 49 U.S.C. 11343–11344 and to be granted authority temporarily to do so under 49 U.S.C. 11349.

The general topics covered are:

Sec.

1100.240 (A) Filing of applications under 49 U.S.C. 11344.

1100.240 (B) How to oppose applications filed under 49 U.S.C. 11344.

1100.240 (C) Procedures relating to oral hearings.

1100.240 (D) General rules governing the applications filed under 49 U.S.C. 11344.

1100.240 (E) Processing of applications filed for temporary authority under 49 U.S.C. 11349 corresponding to applications filed under 49 U.S.C. 11344 or 10926.

Sections 1100.240 (A) through 1100.240 (E) are added to read as follows:

§ 1100.240(A) Filing of applications under 49 U.S.C. 11344.

(a) *Procedures used generally*—The ICC uses two basic types of procedures. Most cases are processed under the *modified procedure* (on the basis of an evidentiary record composed entirely of written statements). Occasionally, a case involves extraordinary substantive issues, the resolution of which requires taking testimony from persons at an *oral hearing*. These rules govern both types of proceedings. It is the Commission's policy to process cases under the modified procedure where at all possible.

(b) *Starting the application process*—Carriers that seek to consolidate, purchase, merge, or lease operating rights and properties, or acquire control of motor carriers shall properly complete an application to do so. (See 49 CFR 1003.1 and 1002 regarding the forms and filing fees.) Application forms are available at Commission field or regional offices or at the Office of the Secretary.

(c) *Information to be submitted by applicants*—(1) *The application form.* Application forms are explicit concerning the information which shall be submitted. Failure to fully comply with the instructions on the application form may result in the rejection, dismissal, or denial of the application. Persons shall resolve any questions relating to the application form by contacting the Commission before filing the application.

(2) *Caption Summary.* Each application shall be accompanied by a caption summary: (i) Describing the proposed transaction, and indicating (A) (*1*) whether any portion of the operating rights involved in the transaction is proposed to be cancelled or restricted, (*2*) whether an application under 49 U.S.C. 11349 to perform temporarily the service proposed by the permanent application has been filed, and (*3*) whether another application has been filed under provisions of the revised Interstate Commerce Act which is directly related to the proposed transaction. (See 49 CFR 1100.240(A)(d) regarding directly related applications)

(3) The completed application form shall contain applicant's entire case (other than an optional reply statement in an opposed proceeding) under the modified procedure. Any statements submitted on behalf of an applicant supporting the transaction shall be verified. Pleadings consisting strictly of legal argument, however, need not be verified.

(d) *Directly related applications.*—Directly related applications shall be filed along with the proposed finance transaction. These applications are filed under other provisions of the Act which either directly affect or are directly affected by the finance transaction proposed under 49 U.S.C. 11343. Typically, they include requests for authority to acquire new operating authority, to modify or convert existing operating authority, or to issue securities or assume debt obligations. Whenever an application is filed under these rules and a directly related application is also filed, the caption summary of each shall make reference to the other.

(e) *Where the application is sent.*—See 49 CFR 1100.247(A)(i), except that an original and *two* copies of the finance application are required.

(f) *Commission review of the application.*—See 49 CFR 1100.247(A)(j).

(g) *Changing the request for authority after notice of the application appears in the* Federal Register.—See 49 CFR 1100.247(A)(k).

(h) *After publication in the* Federal Register.—(1) Interested persons have 45 days to file protests at the Commission. See § 1100.240(B).

(2) If no one opposes the application, it will be decided using the information submitted with the application.

(3) Applicants are required to furnish a copy of the application to any interested person. The request for a copy shall contain a check or money order for $5 payable to applicants to cover (at least partially) reproduction and mailing costs. Applicants need not supply copies to any person not sending the appropriate payment. Applicants are required to mail the copy within 5 days of the request being received.

(4) If the application is opposed, opposing parties are required to send a copy of their protest to the applicants, see § 1100.240(B)(a)(2).

(i) *Filing a reply statement.*—See 49 CFR 1100.247(A)(m). A reply statement consisting strictly of legal argument need not be verified.

(j) *After all statements are submitted.*—See 49 CFR 1100.247(A)(n).

(k) *Applicants withdrawal.*—See 49 CFR 1100.247(A)(o), except that the request shall be submitted jointly by applicants.

§ 1100.240(B) How to oppose finance applications.

(a) *Filing a protest to a finance application.*—(1) Protests to a finance application (filed number 49 U.S.C. 11343) shall be filed (received at the Commission), within 45 days from the date the application is published in the Federal Register.

(2) A protest filed under these rules shall also be served upon applicants' representatives.

(3) Failure to file timely a protest waives further participation in the proceeding.

(b) *Contents of a protest.*—(1) Protests shall be verified.

(2) All information upon which the protestant plans to rely shall be put in the protest including:

(i) The grounds upon which the protest is made and the protestant's interest in the proceeding;

(ii) All facts, matters, and things relied upon by the protestant in opposing the application; and

(iii) A request for oral hearing if one is desired.

See 49 CFR 1100.240(C).

(c) *To whom the protest is sent.*—See 49 CFR 1100.247(B)(g).

(d) *Obtaining a copy of the application.*—See 49 CFR 1100.247(B)(h).

(e) *Withdrawal by protestant.*—See 49 CFR 1100.247(B)(i).

§ 1100.240(C) Procedures relating to oral hearing.

(a) *Requests for oral hearing.*—It is the policy of the Commission to handle motor finance application proceedings under § 1100.240 using the modified procedure if at all possible.

(1) If a person believes that a proceeding should be orally heard because of significance of the case, or because material issues are in dispute, the person may request oral hearing.

(2) The request shall specifically state the evidence that would be presented, the reason why the evidence is material to determine the merits of the proceeding, why an oral hearing with cross-examination is necessary to bring it out, and what evidence already in the record would be contravened (with specific page references).

(3) The person requesting a hearing shall further indicate the approximate number of witnesses to be presented, an estimate of the hearing time required for such presentation, and a suitable location for the hearing.

(b) *Designation of case for oral hearing.*—(1) The Commission will determine whether an assignment for oral hearing should be made, either before or after notice to interested persons for filing of the application has been published in the Federal Register and the period for filing protests has expired.

(2) Notice of the time and place of any hearing, conference, or other proceedings will be given to interested parties by mailing to them the order or notice assigning the application for hearing, conference, or other procedure.

(3) Unless a request for oral hearing is specifically granted (under subparagraph (2) of this paragraph) it is deemed denied.

(c) *Change of place or time of assigned hearing.*— (1) A request by any party for a change in the time or place of an assigned hearing shall set forth emergency circumstances warranting the change; shall be in writing and filed with the Commission within 10 days of the date of the notice assigning the proceeding for a hearing, and shall be served on all known parties of record at the same time and by the same method of communication as service is made on the Commission.

(2) The applicants' representatives, protestants, and those who request notice of changes in time or place of hearing, conference, or other proceedings will be informed of any changes if notice is given by mail. If telegraphic notice becomes necessary, notice of any changes will be given by telegram only to those who request telegraphic notice at their expense.

(d) *Applicants' withdrawal.*—Upon receipt of an order or notice of a hearing assignment, applicants who no longer intend to proceed to hearing shall immediately and jointly request dismissal of their application, with appropriate notification to all protestants, failing which applicants or their representatives, or both, may be subject to censure.

(e) *Failure of protestant to appear at hearing.*—The failure of any person filing a protest to an application to appear at a scheduled hearing shall be construed as a waiver of the person's rights to participate further in the proceeding. Additionally, that person and any representative responsible for participation in the proceeding may be subject to censure for failure to appear.

§ 1100.240(D) General rules governing the applications filed under 49 U.S.C. 11344.

The regulations at 49 CFR 1100.247(C) (a) through (f) are applicable here, *except that* (a) with respect to *verification of statements,* (see 49 CFR 1100.247(C)(e)(1) in addition to motions to strike and replies thereto, pleadings which consist only of legal argument need not be verified, and (b) with respect to *copies* (See 49 CFR 1100.247(C)-(c)(1)) an original and *two* copies of finance applications need be filed.

§ 1100.240(E) Processing of temporary authority applications filed under 49 U.S.C. 11349 corresponding to applications filed under 49 U.S.C. 11344 or 10926.

(a) *Applications governed by these rules.*—These rules govern the handling of applications filed for temporary authority to operate motor carrier properties sought to be acquired by the applicants under separately filed applications under

(1) 49 U.S.C. 11343 and 11344 (for authority to consolidate, purchase, merge or lease operating rights and properties, or to acquire control of motor carriers), and

(2) 49 U.S.C. 10926 (for the transfer of motor carrier certificates and permits).

(b) *Procedures used generally.*—Since the basis for filing applications for temporary authority under these rules is to prevent destruction or injury to motor carrier properties sought to be acquired under 49 U.S.C. 11343 and 11344 or 10926 these rules are designed to permit the Commission to decide expeditiously temporary authority applications.

The Commission has no obligation to give public notice of applications filed under these rules for temporary authority. Cases are decided by an appropriate decisional body without hearings or other formal proceedings. However, the rules do permit the Commission, where it is feasible, to publish notice of temporary authority applications, and applications may be opposed.

(c) *Starting the application process.*—(1) Persons seeking temporary authority under this section shall properly complete an application. (See 49 CFR Parts 1003 and 1002.1 regarding forms and filing fees.)

(2) *Note.* An application for temporary authority may only be filed concurrently with, or subsequent to, the filing of a related application under 49 U.S.C. 11344 or 10926.

(d) *Information to be submitted by applicants.*—The completed application form contains all of the information necessary to allow the Commission to decide a case. It consists of applicants' entire case and shall contain all of the information upon which applicants intend to rely.

(e) *Where the application is sent.*—(1) The original and two copies of the application shall be sent to the Interstate Commerce Commission, Office of the Secretary, Washington, DC, 20423 along with the application fee.

(2) Copies of the application shall be sent by applicants to the persons and State officials specified on the application form.

(3) *Provided that,* for an application for temporary authority which is filed subsequent to the filing and Federal Register publication of the related finance transaction (under 49 U.S.C. 11344 or 10926) applicants shall serve a copy of the temporary authority application upon all parties of records without change as of the date of the filing.

(f) *Commission review of an application.*—(1) Where an application for temporary authority is filed concurrently with the related finance application (under 49 U.S.C. 11344 or 10926) notice of the filing of the temporary authority application will appear in the Federal Register

publication of the related finance transaction. The Federal Register publication will be of the decision-notice in the section 11344 proceedings, and of the service authorized in the section 10926 proceeding.

(2) A concurrently filed temporary authority application (and protests, if any) will be submitted to an appropriate decisional body for disposition as soon after its filing as possible. These rules do not provide for any specific time period for the filing of opposition to concurrently filed temporary authority applications. A case may be decided prior to the Federal Register publication of the related 49 U.S.C. 11344 or 10926 proposal.

(3) Where an application for temporary authority is filed subsequent to the filing of a related 49 U.S.C. 11344 or 10926 application to which protests have been filed, the Commission will seek to refrain from deciding the temporary application until at least 20 days from the date applicant served protestants with a copy of the temporary authority application. However, the Commission will take immediate action if warranted.

(4) A copy of the Commission's decision will be served upon all parties of record.

(g) *Who can oppose an application.*—A protest to an application filed for temporary authority under these rules may only be filed by persons who oppose, or intend seasonably to oppose, the related finance application filed under 49 U.S.C. 11344 or 10926.

(h) *Acquiring notice of the application.*—Notice of the filing of an application may be afforded potential protestants in one of the following ways:

(1) Where the temporary application is filed concurrently with the related finance transaction under 49 U.S.C. 11344 or 10926, notice of the related finance transaction will appear in the Federal Register publication. (See 240.(E)(f)(1)).

(2) Where the temporary authority application is filed subsequent to the filing and Federal Register publication of the related finance transaction under 49 U.S.C. 11344 or 10926, applicant shall serve a copy of the temporary authority application without charge on parties of record as of that date. (See 240(E)(e)(3)).

(3) A copy of the temporary authority application is available for inspection at the Commission's Offices in Washington, DC, and the Regional Office(s) in which each applicant is domiciled.

(i) *Contents of a protest.*—(1) A protest to an application for temporary authority shall be in writing, but in no particular form. It may, for example, consist of a telegram or letter or pleading.

(2) The protest shall state the protestant's interest in the proceeding and the specific grounds upon which protestant relies in opposing the temporary authority application.

(3) The protest shall also indicate that a copy has been served on applicants' representatives.

(j) *To whom the protest is sent.*—(1) Only the original need be sent to the Commission (Office of the Secretary, Washington, DC, 20423).

(2) A copy of the protest shall be served on applicant's representatives.

Appendix B—Instructions for Forms OP-F-44 and OP-F-45 Instructions

1. *Reference*—See 49 US.C. 11343; 49 CFR 1100.240

2. *Filing Fee*—Applicant must submit, with the application, a check or money order payable to the Interstate Commerce Commission for the amount listed at 49 CFR 1002.2

3. *Form*—If this form is not used, application shall be typewritten or printed on paper 8½ inches wide and 13 inches long, with a margin of 1½ inches on the left side and 1 inch on the right side. Indent quotations and use only one side of the paper. White-line blueprints which cannot be reproducted by photography are not acceptable.

4. *Appendices*—Shall be folded to conform to the size of the application.

5. *Manner of Execution*—The original application shall be signed in ink by applicant(s), if individual(s); by all partners, if a partnership; and if a corporation, association, or other similiar form of organization, by an executive officer having knowledge of all matters in the application.

6. *Number of Copies*—File with the Interstate Commerce Commission at Washington, D.C. 20423, the original and (two) copies of each application. Concurrently furnish one copy to each of the Regional Managing Directors of the Commission's Office of Consumer Protection in which are located the headquarters of the carriers involved in the application, and upon written request, to the Board, Commission, or Official (or the the Governor where there is no Board, Commission or Official) having authority to regulate the business of transportation by motor vehicle, in each State in or through which operations may be conducted under the operating authorities involved in the application. Signatures on copies may be stamped or typed. A summary of the application shall be delivered by first-class mail to the appropriate official (described above) of the State in which the headquarters of applicants are located.

7. *Notice to Competitors*—Applicants are not required to give notice to competitors. Notice to interested persons of the filing of the application will be given by the publication of a summary of the authority sought in the Federal Register.

8. *Amendments*—Amendments to applications will not be permitted after notice of the filing of the application has been published in the Federal Register.

9. *When Additional Space Required*—Attach to the application supplemental sheets making specific reference to the supplements.

10. *Information Required*—Must be given unless not known, unavailable or inapplicable. However, an explicit statement to the effect shall be made in the application, stating why the information has not be given.

11. *Hearing*—Requests for postponement, or change of location of a hearing, must be made in writing and filed with the Commission within 10 days of the date of the notice assigning the proceeding for a hearing. Any request must state the emergency circumstances warranting the change. An ample supply of exhibits to be used at a hearing should be prepared so that copies are available for all parties, and where practicable should be distributed in advance.

Instructions for Form OP-F-46 Instructions

1. *Reference*—See 49 U.S.C. 11349 and 10926, 49 CFR 1100.240.

2. *Fees*—Applicant shall submit with the application a check or money order made out to the Interstate Commerce Commission for the amount listed at 49 CFR 1002.2.

3. *Form*—If this form is not used, application shall be typewritten or printed on paper 8½ inches wide and 13 inches long, with a margin of 1½ inches on the left side and 1 inch on the right side. Indent quotations and use only one side of the paper. White-line blueprints which cannot be reproduced by photography are not acceptable.

4. *Exhibits*—Shall be folded to conform to the size of the application.

5. *Manner of Execution*—The original application shall be signed in ink by applicant(s), if individual(s), by all partners, if a partnership; and if a corporation, association, or similar form of organization, by an executive officer having knowledge of all matters in the application.

6. *Number of Copies*—File with the Secretary of the Interstate Commerce Commission at Washington, DC, 20423, the original and two copies of each application. Concurrently furnish one copy each to the Regional Managing Directors of the Commission's Office of Consumer Protection in which are located the headquarters of the carriers involved in the application, and upon their written request, to the Board, Commission, or official (or to the Governor where there is no Board, Commission or Official) having authority to regulate the business of transportation by motor vehicle in each state in which the carriers operate. Signatures on the copies may be stamped or typed. A summary of the application shall be delivered by first-class mail to the appropriate official (described above) of the State in which the headquarters of applicants are located.

7. *Notice*—If applicants file this application to the filing of a related application under 49 U.S.C. 11343 or 10926, they shall serve a copy of this application upon all parties of record to date. If this application is filed concurrently with the corresponding application under 49 U.S.C. 11343 or 10926, the Commission will give notice of both filings by Federal Register publication of a summary of the authority sought. (Applicants shall prepare the summary in conjunction

with the filing of the application under 49 U.S.C. 11343 or 10926).

8. *When Additional Space Required*—Attach to the application supplemental sheets, making specific reference to the supplements in the form. Do not paste riders to any page.

9. *Lease or Other Agreement*—The written instrument filed as Exhibit B should provide for a specific monetary monthly rental or management fee commensurate with the value of the properties to be operated temporarily. Temporary authority should not be requested for the purpose of making legal a violation of 49 U.S.C. 11343.

10. *General*—No consideration will be given to an application for temporary authority under 49 U.S.C 11349 unless a corresponding application under 49 U.S.C. 11343 has been filed.

12. *Related Applications*—Applicant shall bring to the Commission's attention any certificate or permit it seeks (under the OP-1 procedure) which is directly related to the proposed transaction. Directly related applications must be filed contemporaneously.

13. Federal Register *Summary*—The applicant shall prepare a summary of the authority sought for the Federal Register in the form prescribed by the Commission. The caption summary shall indicate, in part, whether an application has been filed under (a) 49 U.S.C. 11349 for temporary authority and/or (b) another section of the Act which is directly related to the proposed finance transaction.

[FR Doc. 80-19938 Filed 7-2-80; 8:45 am]
BILLING CODE 7035-01-M

49 CFR, Parts 1002, 1003, 1045A, 1056, 1062, 1100, 1130, 1150

[Ex Parte No. 55 (Sub-No. 43)]

Rules Governing Applications for Operating Authority

AGENCY: Interstate Commerce Commission.

ACTION: Notice of interim rules and request for comments.

SUMMARY: The "Motor Carrier Act of 1980" ("the Act") has made numerous changes in the statutes affecting the Commission, including requiring expedited procedures, changing the entry standards for motor carriers of property, and redefining contract carriage of property by motor vehicle.

These statutory changes require a complete revision of present rule 49 CFR 1100.247, the section which contains rules governing the application process. Changes in the pertinent application forms are also required, and corresponding technical revisions to 49 CFR Part 1002, 49 CFR Part 1003, 49 CFR Part 1130 and 49 CFR Part 1150 must be made.

49 CFR 1045A, 1056.40 and 1062, which contain expedited application processes, are deleted since either the Act prohibits public conveniences and necessity findings based upon general findings made in rulemakings or because the procedures are incompatible with the unified application process.

Explanation is given as to the Act's effect on (1) authority received under master certificates and general findings, and, (2) pending applications.

Appropriate forms of requests for operating authority are prescribed in two areas: (1) fitness related applications, and (2) contract carrier of property applications.

Because the procedural provisions were effective immediately and the Act went into effect upon enactment, we are publishing these as interim rules to be used until final rules are adopted. Comments are requested on the feasibility of these interim rules as final rules.

DATES: Effective date: July 3, 1980. Comments are due August 18, 1980.

These rules are effective on an interim basis on July 3, 1980, and govern applications filed on or after that date.

ADDRESSES: An original and 15 copies, if possible, should be sent to: Ex Parte No. 55 (Sub-No. 43), Room 5416, Interstate Commerce Commission, Washington, D.C. 20423.

FOR FURTHER INFORMATION CONTACT:

Peter Metrinko (primary contact), 202-275-7885.
Van Bosco (forms information), 202-275-0193.
Donald J. Shaw, Jr., 202-275-7292 (7291).

SUPPLEMENTARY INFORMATION:

Statutory Change Highlights

The Motor Carrier Act of 1980 ("Act") makes numerous changes in the law which governs the Commission's activities. Most of these changes relate exclusively to the motor carriage of property, but other areas within our jurisdiction are affected, e.g., the adoption of statutory time limits for all non-rail proceedings.

49 U.S.C. 10101(a) is amended by adding a separate transportation policy governing the motor carrier of property industry.

Motor carrier entry policy is substantially changed in the property area, making it easier for applicants to obtain certificates. The Commission is required to grant certificates to an applicant making a proper fitness showing, and presenting evidence that the service proposed will serve a useful public purpose, unless it finds on the basis of evidence presented by objecting persons that the transportation would be inconsistent with the public convenience and necessity. In other words, it creates a presumption that the proposed transportation is in the public interest, and requires protestant to overcome this presumption. Additionally, the Commission may not make a finding relating to public convenience and necessity based upon general findings developed in rulemaking proceedings.

In six areas the public convenience and necessity or public interest test is wholly eliminated, and fitness is the sole decisional criterion.

In both the motor common and contract carrier area, minimum qualifications must be met before a person can protest an application.

The Act also requires that unreasonable restrictions be eliminated from existing authorities. This proceeding does not deal with the amendments to 49 U.S.C. 10922(h), in view of the faster time limits imposed on the processing of restriction removals.

A major reason for complete revision of present 49 CFR 1100.247 is the time limits imposed on non-rail proceedings, under 49 U.S.C. 10322.

This proceeding will now deal with appellate procedures, which are being treated in a separate proceeding.

Summary of Proposed Revisions

Appendix A to this notice lists a proposed and interim version of the rules of practice which govern operating rights applications. Appendix B sets forth a revised application form, OP-1, intended to replace existing application forms. Appendix C describes other technical revisions to the Code of Federal Regulations.

Interim Rules

These rules of practice and procedure will be used by the Commission on an interim basis. They will apply to applications filed after the date of the Act's effectiveness. The Commission is faced with a situation in which the due and timely required execution of the agency functions would be prevented by undertaking a rulemaking proceeding prior to the adoption of any rules. Thus, notice and comment for these interim rules are not required under 5 U.S.C. 553(b) (A) and (B). Public comments are invited on these interim rules as a basis for final rules, however. We shall act as fast as possible in formulating final rules.

Unified Procedures and Forms

All operating authority applications will use these rules, including those types where only fitness is required to be proved. Applicant will file an application form, a caption summary (describing the authority sought), a verified statement, and where

appropriate, a certification of support from a public witness. This last requirement is subject to qualification. For example, in fitness related cases (defined below) a certification of support is not required. And in motor common carrier of property applications, applicant has the alternative of submitting other evidence which demonstrates the service proposed would serve a useful public purpose, responsive to a public demand or need.

A person wishing to oppose the application has 45 days from the date when notice of the application is published in the Federal Register, to file a protest. The protest right is not automatic. Specific formats are prescribed for the protest.

Applicant may file a reply statement within 60 days of the Federal Register publication.

Imposed Time Limits

A major catalyst for the proposed rule is the statutorily imposed time limits for non-rail proceedings. These time limits impel us to require that the applicant file its evidence at the inception of the application, and that protestants file verified statements in response. The statute, 49 U.S.C. 10322 requires that, in modified procedure cases, we have a completed initial decision served within 180 days. In orally heard cases, 270 days are allowed for the initial decision, of which 180 days may be used for the completion of evidentiary proceedings. Under 49 U.S.C. 10322(b)(2), ex-rail cases require final Commission action within 180 days from the date of the application. We believe that these statutory time limits can be met through expedited internal handling and strict adherence to deadlines by the parties.

The proposed and interim rule governing applications is divided into three parts, covering three separate topics in the application process. These shall be discussed separately.

§ 1100.247(A) How to apply for operating authority.

The layout of the rule is intended to reflect the chronology of a proceeding. We expect greater participation in the process by persons representing themselves, and believe this layout will assist their efforts.

Section 1100.247(A)(b) reflects the provisions of 49 U.S.C. 10922(b)(4), 49 U.S.C. 10923(b)(5)(A), and 49 U.S.C. 10924(b) which establish fitness as the decisional standard for six types of operating authority.

Section 1100.247(A)(e and f) list the information required to be submitted by applicants. Verified shipper or witness certifications of support are not required in three instances.

First, fitness related applications do not require the certifications, since the sole issue for determination is whether applicant is fit. This information has traditionally been supplied by the applicant. Applicant may, under § 1100.247(A)(h)(4), provide verified statements where it believes factual matters may be in controversy concerning the description of circumstances qualifying the application as one properly within the bounds of the rule.

Second, water carrier exemption cases have traditionally not employed shipper certifications.

Third, applicants for common carrier authority to transport property may elect not to file evidence from supporting shippers although we believe shipper evidence is the most effective type.

Specifically, subsection (a) of section 5 of the Act adds a new subsection to section 10922 of title 49, United States Code, to govern applications for authority to operate as a motor common carrier of property. New section 10922(b) will make it easier for applicants to obtain certificates than has been the case under the historical approach of the Commission.

Paragraph (1) of the new section 10922(b) sets forth the entry standards to be used by the Commission in determining whether to issue a certificate authorizing operation as a motor common carrier of property. It retains the traditional test that all applicants must be fit, willing, and able. However, it revises the public convenience and necessity requirement. Specifically, it reduces the burden of proof on persons supporting the application. Persons supporting the application will be required to come forward with some evidence of a public need or demand for the service. Under this standard, proponents of the application must show that the service they propose would serve a useful public purpose, responsive to a public demand or need. For example, this demonstration could be made by public officials, shippers, receivers, trade associations, civic associations, consumers, and employee groups, as well as by the applicant itself. The normal way to establish this has been for applicant to submit evidence of some of those who would use the service proposed. We believe that this is still the most effective evidence, for it provides us with the information to frame a grant of authority, and provides a factual framework for dealing with the application and the interests of the parties on both sides. However, the Congress did not intend to restrict the commission in which factors it can consider in determining whether the proposed service is responsive to a public demand or need. These factors include the following: a need or demand for new services, innovative quality or price options, increased competition, greater fuel efficiency, improved service for small communities, improved opportunities for minorities, and any other benefits that would serve a useful public purpose. This is consistent with the Commission's consideration of the National Transportation Policy, including any of the applicable factors listed in section 10101(a)(7) (A) through (H). Where an application is uncontested, the Commission will be concerned with the fitness of an applicant and whether the applicant has met his prima facie showing of public need.

Under new section 10922(b)(1), once the applicant has made a prima facie showing that the proposed service would serve a useful public purpose, the burden of proof would shift to persons opposing issuance of the certificate to show that the proposed service is inconsistent with the public convenience and necessity. In other words, it creates a presumption that the grant of the application is consistent with the public convenience and necessity if the applicant demonstrates that the proposed service will serve a useful public purpose.

We do not believe it feasible or necessary to prescribe at this time the types of prima facie evidence that a motor common carrier of property applicant may tender to show "useful public purpose". Obviously, demographic, economic, or industrial data would be likely choices. Since one of the factors listed in the transportation policy is a "variety of quality and price options", applicant may also submit information about lower rates.

Certain types of applications lend themselves very easily to not having evidence of shipper support, such as substitution of single-line for joint-line service, see 49 CFR 1062.2. We also believe that existing motor common carriers of property with a number of fragmented authorities should be able to file applications for one or more broad certificates based largely on evidence of existing service being provided. Shipper support would not be necessary for every part of the application. Evidence of existing service may be tendered in the form of traffic abstracts.

The resulting certificates may be broader in scope than the sums of the existing certificates, but the scope of the

carrier's present operations, and any additional supporting evidence, where appropriate, should provide justification for the simplification and expansion.

It is reasonable that a carrier with a large number of existing authorities be allowed to consolidate its authorities into one or several certificates. If a carrier appeared before us for the first time with evidence that a large number of shippers required additional service to diverse points across the United States, we would probably grant a broad certificate. The same reasoning should hold true of an established carrier wishing to round out its authority.

The format for applicant's verified statement (except in fitness related cases) is set forth in paragraph (g). An applicant need only file specified types of information, according to the type authority it seeks. This is an improvement over our existing rules, since applicants for non-motor authority would often become confused over the apparent requirements for irrelevant information.

The applicant's verified statement in fitness related applications is described in paragraph (h). Since these applications employ a fitness standard, much less evidence is required. Note that property brokers (except household goods), which have the same fitness standards, are included in this section.

Paragraph (k)(2) represents an innovation in the application process, eliminating restrictive amendments. The Act prescribes fast processing of applications. Additionally, the Act and its legislative history plainly establish a policy that broad service authorizations are favored in the motor carrier area. These policies require the adoption of a stricter policy with regard to the acceptance of restrictive amendments.

This new rule requires the applicant to think through clearly its application efforts before the process is initiated. Too many times under the present rules applicants let the restrictive amendment process, rather than the public need for the service, prescribe what authority they will request. This rule favors broad requests for authority, and enables the applicant to present representative information to support its request. It lets the decisional process under the new statutory standards, rather than the negotiation process, determine whether the new service is required.

This rule will also have a salutary effect on what we believe is a now common practice engaged in by protestants—the filing of opposition in the hopes of getting an applicant to reduce its request for authority. These protestants may not have sufficient evidence to establish their position, but by merely appearing in the case they persuade applicant to reduce a broad request for authority down to a fragment. Applicant, anxious to avoid protracted litigation, often accedes to the restrictive amendment.

Finally, the time limits imposed by the Act require an end to present restrictive amendment practice. All restrictive amendments are now subject to Commission approval. Under the present system, which liberally allows restrictions, many unacceptable ones are offered, with the result that opposition parties' conditioned withdrawals may be voided. There simply is no time under the 180-day decisional time limit to allow consideration of restrictive amendments by the Commission (most of which would now be unacceptable in any event). We estimate that under the proposed rules a protestant's statements will be due at the Commission at about the 75th day from the date the application is filed. The reply statement of applicant would arrive about the 90th day. To meet the 180 day decisional time limit, we must immediately get to work deciding the case with a complete record in hand.

In paragraph (1), note that after Federal Register publication the applicant is required to furnish a copy of its application package to any person requesting a copy, but that the requesting person must pay a nominal charge to cover reproduction costs.

In the past we have received many complaints from applicants that persons with no true interest in the application would demand copies of their shipper support certifications solely for the purpose of ascertaining general market needs for service.

We are here faced with a difficult situation. The time limits imposed by the Act require that applicant submit its entire application package upon filing. It would be an unfair expense burden to require the applicant to send copies of the application package to the merely curious. This would be an administrative burden which would inhibit entry, especially with regard to small carriers and new applicants.

Our interim solution is to require the requesting party to submit a check or money order for $10.00 to help defray expenses.*

*In addition, the Commission is aware that a number of "watching" services will provide copies of applications at a modest fee. We believe our approach, coupled with the availability of these watching services, is consistent with the Congressional concern that undue notice burden not be placed on applicants. See, in this connection, statement of Senator Packwood, 45 Cong. Rec. S 7685 (daily ed. June 20, 1980).

We specifically request comments on other methods of providing adequate notice to potential protestants. For example, would protestants receive adequate notice through the Federal Register notice alone? Would it be necessary to keep the requirement that the applicant supply copies if the application were also available at the primary business place of the applicant and the office of applicant's representative? Any other suggestions would be appreciated.

If the potential protestant desires expedited copies under the interim rule, we encourage the persons concerned to make informal arrangements, such as including postage for express mail delivery of the application package.

Under paragraph (n), note that we will no longer serve a "designation" or "modified procedure" order on the parties if the proceeding is to be handled under the modified procedure. Time constraints have required that we develop an "automatic" system. We will no longer have the luxury of setting dates for statements. They must be submitted automatically, using as a basis the date of the Federal Register publication.

§ 1100.247(B) How to oppose requests for authority

This section of the rules discusses how a person qualifies to be a protestant, and what evidence is to be submitted. The person must file both *qualifications* evidence and *factual* evidence concurrently.

The qualifications format in paragraph (c) follows the protest qualification criteria set forth in the Act for motor common and contract carrier of property applications. The statutorily mandated qualifications parallel in some respects the "protest standards" employed by the Commission in motor carrier proceedings, which were issued in Ex Parte No. 55 (Sub-No. 26), Protest Standards in Motor Carrier Application Proceedings, (1978), printed at 43 FR 50908, modified at 43 FR 60277. These motor carrier protest standards were approved in *American Trucking Associations, Inc.*, v. *U.S.*, No. 78-2260 (D.C. Cir., filed April 24, 1980). *("ATA v. U.S.")*.

In paragraph (c)(6), we have added "or right to intervene under a statute", since, for example, 49 U.S.C. 10328(a) gives designated representatives of employees of a carrier permissive rights to intervene. This is not inconsistent with the provisions of the transportation policy at 49 U.S.C. 10101(a)(7)(D) which require evaluation of effects on fair wages and working conditions.

The qualifications format applies to all types of applications. We believe the public will best be served by having a unified system, as existed for all types of applications prior to the Commission's adoption of the "protest standards."

As in motor carrier proceedings, protestants to broker, water carrier, and forwarder applications should not automatically have a right to intervene in a proceeding.[1] Only a competitor is interested in a grant of competitive operating authority, *ATA* v. *U.S., supra,* slip op. at 13. We are not excluding persons with cognizable interests, but judging whether any given person has such an interest.

This qualifications format will not affect the present decisional standards employed in broker, water carrier, or passenger motor carrier proceedings, and is consistent with present decisional criteria in those areas.

In the freight forwarder area, for example, the burden of proof on the part of an applicant is minimal. New or additional freight forwarder authority may be granted even though existing service is adequate if such a result is supported by a public interest factor of equal or dominant importance. *Emery Air Freight Corp. Freight Forwarder Applic.,* 339 I.C.C. 17, 31 (1971). Other elements of importance may include the desirability of competition, of different kinds of service, and of improved service. *Yellow Forwarding Company* v. *I.C.C.,* 369 F. Supp. 1040, 1046 (D. Kans. 1973). The Commission has determined that a freight forwarder permit should be authorized if an applicant can make a prima facie showing of need for the proposed service, unless protestants demonstrate by persuasive evidence that authorization of the proposed service would materially and adversely affect their operations. *Symth World-Wide Movers, Inc., F.F. Application,* 337 I.C.C. 721, 737 (1970).

A similar minimal standard exists in the broker area, since the basic purpose of the statutory provisions subjecting brokers to our regulation is the protection of the public, *Holiday International, Inc., Broker Application,* 128 M.C.C.34 (1977).

The Commission has established decisional standards in the water carrier area which roughly parallel those in the motor carrier area, e.g., *Coyle Lines, Inc., Extension,* 323 I.C.C. 386 (1964), *American Coastal Lines, Inc., Ext.—Houston, TX,* 337 I.C.C. 849 (1970), and *Atlas Construction Co.—Exemption,* Section 302(e), 285 I.C.C. 244 (1953).

The unified qualifications format leaves room for anyone with a legitimate interest to protest an application, since they may, under paragraph (c)(6), show that the protest is not contrary to the national transportation policy.[2]

We do not believe it necessary or feasible to prescribe the type of data that will be acceptable under (c)(6). The national transportation policy is complex. An infinite variety of factual situations exist in application proceedings. It is up to the persons wishing to protest to show their qualifications through specific evidence. If a person attempts to qualify as a protestant under paragraph (c)(6) and offers only broad statements, unsupported by data, we would reject the protest.

The factual evidence format prescribed in paragraph (d) is designed as a guide for protestants to present a succinct, persuasive case. Under (d)(6), a protestant may present any other evidence that it deems appropriate. The format is broad enough to encompass all types of applications, and includes many critical factors which go into the decisionmaking process. It should be emphasized that this format does not change any of the existing decisional standards for the various types of applications involved.

Under paragraph (e), we have set forth appropriate evidence to be submitted in fitness related applications. We allow protestant to offer evidence controverting the contention of the application that its application falls within the statutory definition.

Paragraph (f) contains the oral hearing policy to be followed in application cases. We anticipate that almost all cases will be handled under the modified procedure. As part of our mandate to expedite case processing, we believe that we should adopt a policy that favors use of modified procedure if at all possible, and we would set cases for oral hearing only in extraordinary factual circumstances.

§ 1100.247(C) General rules governing the application process.

We propose to adopt more stringent rules with regard to requests for extensions of time. The imposition of statutory deadlines requires that the Commission, the industry and the practicing bar work harder to meet deadlines. The 3-day time limit should act as a buffer in emergency cases.

Pending Applications

Applications for permanent authority pending as of the effective date of the Act will be handled in the following manner.

As a general rule, even where an intervening law does not explicitly recite that it is to be applied to pending cases, it is to be given recognition and effect. Compare *Bradley* v. *Richmond School Board,* 416 U.S. 696, 715 (1974). That general rule will be followed here, with a slight variation caused by the uniqueness of the situation at hand.

One must recognize the purpose of the Act, and the Congressional findings. The purpose is to reduce unnecessary regulation. The Act recognizes that the previous regulatory structure served to inhibit entry and one of the major goals of the Act is to make entry easier. Additionally, the Act is to be implemented with the least amount of disruption to the industry.[3] One must also be aware that there are many thousands of pending applications on hand, and, during this transitional phase, we want to process those with the least amount of disruption to the industry while adhering to the new directions of the Act.

The most practical and fair method to accomplish this is in the following manner. All applications on file as of the date of the Act's effectiveness will be handled under existing procedures. The Act requires a drastic revision of our procedures, and there is no way to make the interim and old procedures compatible. The least disruption to the industry will occur by simply letting the pending applications run their course through the existing process.

In applying the substantive law, however, we shall engage in the following process. Under the general rule of statutory construction, we are to apply laws in effect at the time we render a decision. The salient feature of the law with regard to motor carriers of property, however, is that the entry burden for an applicant has been eased. Rather than have all parties in all motor carrier of property proceedings file new evidence, which would cause tremendous disruption, the most efficient and fair method will be to continue to judge the pending applications (those filed before the Act's effective date) under the old entry criteria. If the application is granted, we

[1] The right of the Commission to establish qualifications standards with regard to passenger motor carriage applications was upheld in the *ATA* v. *U.S.* decision, *supra.*

[2] This permissive intervention right is roughly equivalent to the distinctions made in the former "protest standards" rules which allowed intervention with leave.

[3] Section 3(a) of the Act provides that the Commission should implement these changes "with the least amount of disruption to the transportation system consistent with the scope of the reforms enacted."

can assume that the application would be granted under the new statute, which has more procompetitive standards.

If the application is denied in whole or in part in the initial decision, the applicant shall have two choices. First, it may appeal the decision to a Division of the Commission. The Division, in its analysis, shall first apply the old law, and decide if a reversal of the denial is warranted. If none is warranted, the Division may reopen the proceeding to allow applicant and protestants the opportunity to file additional evidence addressing the new statutory criteria.

The applicant's second choice is simply to file a new application. This choice will enable the applicant to present fresh evidence, and allow all persons to address the new statutory criteria.

We are also precluded from making findings relating to public convenience and necessity based upon general findings developed in rulemaking proceedings. This will require the dismissal of some types of applications where the necessary findings have not already been made. The applications affected are those made under 49 CFR 1056.40 ("pack-and-create"), 49 CFR 1062.1 ("waste products"), 49 CFR 1062.3 ("ex-water") and 49 CFR 1062.4 ("Government traffic"). We note in these types of applications our public convenience and necessity findings are made prior to their submittal to the Federal Register for notice publication. Therefore, only those applications which have not been submitted to the Federal Register for notice publication need be dismissed.

Note that all pending applications under 49 CFR 1062.2 ("single-line substitution") will continue to be processed since the underlying proceeding did not involve a general finding. Pending applications for property broker licenses under 49 CFR 1045A will also continue to be processed since "public interest" findings with regard to brokers were not prohibited.

An applicant may request the return of its application fee as a result of these involuntary dismissals. Please write to "Office of the Secretary" and specify the docket number involved.

Deletion of 49 CFR 1045A, 1056.40, and 1062

We propose that these parts be deleted, as set forth in Appendix C. In the interim, we will not accept applications under these parts.

Part 1045A contains special procedures governing applications to become a property broker (except brokering the transportation of household goods). The Act amends 49 U.S.C. 10924 and establishes a "fitness" standard similar to the "fitness" examination used under 49 CFR Part 1045A. However, the desirability of having a unified application procedure impels us to delete this section, and handle property broker (except household goods) applications under the fitness related application process. The newly imposed time limits supply the desired expedition.

The Act proscribes findings relating to public convenience and necessity based upon general findings made in rulemaking proceedings, 49 U.S.C. 10922(b)(3). This requires the deletion of 49 CFR 1056.40, 1062.1, 1062.3, and 1062.4, whose procedures were established in this manner.

We will also delete 49 CFR 1062.2, which governs applications in which applicants seek operating authority to provide a single-line service in lieu of existing joint-line operations. Our experience under this procedure is that applications are not generally handled in a more expeditious manner, simply because persons are often not in compliance with the requirements of the rules, or the applications needed special handling. Relatively few applications have been filed under this process. The desirability of having a unified procedure which will speed all applications outweighs the few benefits received under this procedure. Applicants filing for single-line service in lieu of existing joint-line operations may file appropriate argument in their verified statements and elect not to use shipper support; the Commission has had a favorable policy towards those applications. See, e.g., *Caravan Refrigerated Cargo, Inc., Ext.*, 128 M.C.C. 186 (1977), and cases cited there, at 194, and 49 CFR 1062.2.

Effect of the Act on Authority Received Under Master Certificate Procedures

Where a carrier has received operating authority pursuant to procedures developed through general findings in rulemaking proceedings (49 CFR 1056.40, 1062.1, 1062.3 and 1062.4) that carrier may lawfully perform operations. This includes those procedures where letters of authorization were issued rather than certificates.

The legislation does not have the effect of revoking authorities granted under these "general findings" programs. It is a well settled canon of statutory construction that statutes should not be construed to have provides or suggests that the Act was meant to invalidate authority previously granted. Further, nothing in the Commission's rules or its decisions indicates that authority granted under these general findings or master certificates has any different status from any other motor carrier authority the Commission has granted other than that it may not be transferred or sold. While in many cases the carrier holds only a letter of authorization, this has the same effect as a certificate.

Carriers whose applications have been submitted to the Federal Register as of the date of the Act's effectiveness will be issued authority once they effect appropriate compliance, since the Commission will have already made an appropriate public convenience and necessity finding.

Technical Revisions—The Application Process

We propose to delete Parts 1130 and 1150 as unnecessary, since the information found in these parts can easily be obtained elsewhere.

Combining and Revision of Forms No. OP-OR-9, OP-OR-11, OP-FF-10, OP-WC-10, and OP-WC-20

The Motor Carrier Act of 1980 and the new procedures envisioned as a result of these changes, make necessary a substantial revision of application forms used by the Office of Proceedings to process requests for various types of operating authority. We propose that they be combined into a single application form, OP-1, set forth in Appendix B. The affected forms are:

OP-OR-9 Application for Motor Carrier Certificate or Permit.
OP-OR-11 Application for Brokerage License.
OP-FF-10 Application for Freight Forwarder Permit.
OP-WC-20 Application for Water Carrier Certificate or Permit Under Section 309 of the Interstate Commerce Act.

Additionally, a substantially similar form which deals with applications for exemptions (rather than for operating rights) will be included in the proposed revision:

OP-WC-10 Application for Exemption From III of the Interstate Commerce Act Under Section 302(e) or Section 303(h) [4]

The proposed and interim new form makes general changes in style, wording and format wherever it appeared that the old material could be made clearer or more concise. The form has been conformed to the revised Interstate Commerce Act, and includes a question required by the Energy Policy and Conservation Act of 1978.

Some additional information is elicited which will expedite processing

[4] We will also delete Form B.W.C. 1, which was previously incorporated into form OP-WC-10.

(e.g., telephone number of applicant's representative).

A number of questions have been eliminated. In some instances, changes in the Act make some of the questions unnecessary (e.g., motor carrier dual operations). Other material is better supplied in the applicant's verified statement.

Major changes will be discussed below with reference to the number of the affected item in each superceded form.

Item III [Item IV, OP-WC-10]

This item previously asked the applicant to describe its request for authority. This information is now contained in the caption summary provided by applicant.

Item IV(a) [except OP-WC-20]

The question as to whether evidence will be presented by public witnesses is deleted since it is answered in a self-evident manner by applicant's submission of verified certifications from witnesses.

Item V(b) [Item VI(b), OP-WC-10]

This item requested information concerning concurrent duplicating applications.

We have found that this information has been of limited usefulness in the past. The question is obviated by the limitation put into grants of authority that to the extent the issued authority duplicates existing authority, it confers only a single operating right.

Item V(d), [OP-OR-9]; Item V(c), [OP-WC-20]

Information regarding service being performed under existing motor carrier permits has been deleted because of statutory changes which eliminate this from consideration in the motor carrier of property area.

Form OP-WC-20 incorrectly asked for information relating to "limited number of persons" for water contract carriers, which was solely a motor contract carrier statutory qualification. This item has been deleted.

Item V(e), [OP-OR-9]

This item requested dual operations information. This is no longer relevant for motor carriers.

Item VI(d), [OP-OR-11]

This question elicits information which goes to the issue of possible discriminatory practices by a broker pursuant to common control or other affiliation with a shipper. We believe this information is not necessary. Brokers of property affiliated with a shipper are governed by the Commission property broker regulations at 49 CFR 1045, which contain appropriate provisions to protect the public. Most relevant of these is the rebating provisions of 49 CFR 1045.9.

Item VII(a); [Item VIII(a), OP-WC-10]

The requirement that applicant submit maps of its proposed and present operations has been eliminated for all but regular-route applications. Our staff has rarely used the map for irregular-route applications, but finds them necessary in examining regular-route requests for authority.

Certificate of Service of Application on State Boards, [OP-WC-10 and 20]

This form has been changed to conform to the other involved forms for the reasons set forth in Ex Parte No. MC-100 (Sub-No. 2), *Revision of Procedures Requiring Service of Applications on State Officials,* (42 FR 53982-53984), which are equally applicable in water carrier applications.

Appendix: Verified Certification of Shipper or Witness Support

Revisions to 49 CFR 1100.247 would require the applicant to present its evidence at the time it files the application. We have expanded the certification of support to include material that previously was supplied in the witness' verified statement, which has now been eliminated.

Technical Revisions—Forms and Fees

Parts 1002 and 1003 have been revised to reflect the consolidation of application forms. See Appendix C.

Acceptable Forms of Requests for Operating Authority—Fitness Related Applications and Contract Carriage of Property

In a separate proceeding being published concurrently, we are proposing acceptable forms of requests for operating authority. See Ex Parte No. 55 (Sub-No. 43A), Acceptable Forms of Requests for Operating Authority (Motor Carriers and Brokers of Property). Because of the specific statutory treatment of two types of requests for authority, we will require the use on an interim basis of the forms of authority (caption summaries) being proposed in Ex Parte No. 55 (Sub-No. 43A) for (1) fitness related applications under sections 10922(b)(4), 10923(b)(5)(A), and 10924(b), and, (2) contract carriage of property applications.

This interim adoption is necessary if we are to have consistency in the handling of these applications. In each instance the Act has added statutory language which requires a change from any previous method of describing similar requests for authority.

Requests for authority in these two areas not using the appropriate form of authority request will be rejected.

Additionally, we urge carriers to employ broadened requests for authority in all motor carrier applications, as generally discussed in Ex Parte No. 55 (Sub-No. 43A).

Summary

We propose to adopt the rules and application form set forth in Appendices A, B and C, and we will operate under these rules and the application form until further notice. We are receptive to comments on how these rules should be modified or whether some entirely different scheme of rules would function better. The suggestion of any alternative should specifically address how the proposal would work in view of the short time limits for processing applications.

This proposed action does not appear to affect significantly the quality of the human environment or the conservation of energy resources. The interim adoption and our proposal of these rules is required to carry out the purpose, findings and changes made by the Motor Carrier Act of 1980.

These actions are taken under the authority of 49 U.S.C. 10321 and 5 U.S.C. 553.

Decided: June 27, 1980.

By the Commission, Chairman Gaskins, Vice Chairman Gresham, Commissioners Stafford, Clapp, Trantum, Alexis and Gilliam.

Agatha L. Mergenovich,

Secretary.

Appendix A

Introduction

These rules tell persons how to (1) apply for permanent motor carrier, freight forwarder, water carrier and broker operating authority, and (2) oppose requests for authority.

The general topics covered are:

Sec.

1100.247(A) How to apply for operating authority.

1100.247(B) How to oppose requests for authority.

1100.247(C) General rules governing the application process.

In Part 1100, § 1100.247(A) through 1100.247(C) are added to read as follows:

§ 1100.247(A) How to apply for operating authority.

(a) *Applications governed by these rules.* These rules govern the handling of

applications for permanent operating authority of the following type:

(1) Applications for certificates and permits to operate as a motor common or contract carrier of passengers or property.

(2) Applications for permits to operate as a freight forwarder.

(3) Applications for certificates, permits, and exemptions for water carrier transportation of property and passengers.

(4) Applications for licenses to operate as a broker of motor vehicle transportation.

(b) *Applications for operating authority which require only fitness proof.* There are six types of authority ("fitness related applications") which only require proof that the applicant is fit, willing and able to provide the transportation and to comply with appropriate statutes and Commission regulations. Much less evidence is required to be submitted, see § 1100.247(A)(h). These types of authority are (1) motor carrier brokerage of general commodities (except household goods), (2) motor common carrier transportation to any community not regularly served by a certificated motor common carrier, (3) motor common carrier transportation services as a direct substitute for complete abandonment of all rail service in a community, (4) motor common carrier transportation for the United States government of property (except used household goods, hazardous or secret materials, and sensitive weapons and munitions), (5) motor common carrier transportation of shipments weighing 100 pounds or less if transported in a motor vehicle in which no one package exceeds 100 pounds, and (6) motor common or contract carrier transportation by motor vehicle of food and other edible products (including edible byproducts but excluding alcoholic beverages and drugs) intended for human consumption, agricultural limestone and other soil conditioners, and agricultural fertilizers, if such transportation is provided with the owner of the motor vehicle in such vehicle, except in emergency situations.

(c) *Procedures used generally.* The ICC uses two basic types of procedures. Most cases are handled under the *modified procedure.* The modified procedure means that the parties send verified (sworn) statements to the ICC and each other; there are no personal appearances or formal hearings. Oral hearings are used for extraordinary cases. These rules govern both types of proceedings, unless specifically mentioned. The rules at § 1100.247(E), pertain only to cases set for oral hearing.

(d) *Starting the application process.* A person wishing to obtain operating authority first fills out application form OP-1. These forms may be obtained from regional and field offices of the Commission, or from the Office of the Secretary.

(e) *Information to be submitted by applicants (except fitness related applications under § 1100.247(A)(b)).* (1) A completed application form (Form OP-1).

(2) A caption summary describing the authority sought.

(3) A separate verified statement from applicant as described in paragraph (g) of this section.

(4) Verified certifications of witness or shipper support.

(i) Applicants in motor common carrier of property proceedings may file verified certifications of witness or shipper support (See Appendix to the application form). Alternatively, an applicant may elect not to file evidence from supporting shippers, in which case, applicant must submit other evidence showing that the service proposed will serve a useful public purpose, responsive to a public need. This evidence shall be submitted in paragraph (g)(12) of applicant's verified statement. See paragraph (g) of this section.

(ii) Applications for exemptions by water carriers need not be accompanied by verified certifications of support.

(f) *Information to be submitted by applicants in fitness related applications.* (1) A completed application form OP-1, *except* verified certifications of witness or shipper support which are not necessary.

(2) A caption summary describing the authority sought,

(3) A separate verified statement from applicant as described in paragraph (h) of this section.

(g) *The applicant's verified statement (except fitness related applications).* (1) Applicant shall file the information described in this paragraph, according to the type application filed.

(2) The information shall be provided in separately numbered paragraphs.

(3) If a particular item is not applicable, write "N/A".

Key:

Motor common carrier of property=1
Motor common carrier of passengers=2
Motor contract carrier of property=3
Motor contract carrier of passengers=4
Passenger broker=5
Freight forwarder=6
Water common carrier=7
Water contract carrier=8
Water carrier exemption=9

1. Legal name and domicile of applicant; [all].

2. Identity and qualifications of supporting witness; [all].

3. Authority requested; [all].

4. General description of present regulated operations, if any; [all].

5. Affiliation with other motor carriers and persons affiliated with other motor carriers. Show MC-numbers of other carriers, indicate finance proceedings where affiliations approved, or state why approval not necessary; [1, 2, 3, and 4 only].

6. Description of equipment [all except 5].

7. Safety program, compliance with D.O.T. safety requirements. First-time applicants need only state familiarity and willingness to comply with D.O.T. safety requirements. [1, 2, 3, 4].

8. Service now provided to supporting witnesses, or within area sought by application [all].

9. Description of services proposed; state whether services of this type are not available now [all].

10. Name and address of persons or shippers now served under contract [4].

11. Current (or estimated if not yet operating) balance sheet and income statement [all].

12. Applicant may submit any additional evidence in support of the application. If no verified shipper or witness support statements are being submitted, applicant must submit other evidence showing that the service proposed will serve a useful public purpose, responsive to a public need, including how the proposed operation is consistent with the motor carrier transportation policy contained in 49 U.S.C. 10101(a)(7). (1 only).

13. Legal argument supporting the application. (optional) (all).

14. Verification (all).

Note.—Forms for verified certifications of shipper support are contained in the application form.

(h) *The applicant's verified statement in fitness related applications.* This format is used by applicants seeking the types of authority listed at § 1100.247(A)(b). These applicants need not file verified certifications of shipper support. The information submitted shall be in separately numbered paragraphs. If a particular item is inapplicable, write "N/A".

(1) Legal name and domicile.

(2) Identity and qualifications of testifying witness.

(3) Authority requested.

(4) Description of circumstances which support the application. (a) If application is to serve a community not regularly served, describe in detail the location of the community, the highways which serve the community, the last date of service from other motor carriers and their identity, and last date when service was requested from these carriers; (b) If application is for transportation services as a direct substitute for complete abandonment of

all rail service in a community, state docket number and abandonment approval date of the Commission.

Note.—Applicant may submit verified statements from witnesses to support any of these circumstances.

(5) Affiliation with other motor carriers and persons affiliated with other motor carriers. Show MC-numbers of other carriers, indicate finance proceedings where affiliation approved, or state why approval not necessary.

(6) Description of equipment.

(7) Safety program, compliance with D.O.T. safety requirements. First-time applicants need only state familiarity and willingness to comply with D.O.T. safety requirements.

(8) Any other information, or legal argument (optional).

(9) Verification.

(i) *Where the application is sent.* (1) The original and (1) one copy of the application shall be sent to the Office of the Secretary, Interstate Commerce Commission, Washington, DC, 20423, along with the application fee.

(2) Copies of the application shall be sent to the Commission personnel and State officials specified in the application form.

(j) *Commission review of the application.* (1) ICC staff will review the application for correctness and completeness. Minor errors will be corrected without notification to applicant. Incomplete applications may be rejected.

(2) The caption summary will be published in the Federal Register to give notice to the public in case anyone wishes to oppose the application. It will be published in the form of a tentative grant of authority.

(3) If the Federal Register publication does not properly describe the authority sought because of ministerial error, applicant shall inform the ICC within 10 days of the publication date.

(k) *Changing the request for authority after notice of the application appears in the* Federal Register.

(1) Amendments to applications which change the scope of the authority sought are not allowed after the Federal Register publication.

(l) *After publication in the* Federal Register.

(1) Interested persons have 45 days to file protests. See § 1100.247(B).

(2) If no one opposes the application, the tentative grant published in the Federal Register will be rendered effective by a Commission Notice outlining compliance requirements which must be met before applicant commences the proposed service.

(3) Applicant is required to furnish a copy of the application to interested persons after publication. The request must contain a check or money order for $10.00, payable to applicant, to cover reproduction costs. Applicant need not supply copies to any person not sending the appropriate payment. Applicant is required to mail the copy within 5 days of the request being received.

(4) If the application is opposed, opposing parties are required to send a copy of their protest to the applicant.

(m) *Filing a reply statement.* (1) If the application is opposed, applicant may file a reply to the protests. This reply statement is due at the Commission within 60 days of the Federal Register publication.

(2) The reply statement may not contain new evidence. It shall only rebut or further explain matters previously raised.

(3) The reply statement shall be verified, and a copy served upon protestants.

(n) *After all statements are submitted.* (1) When the proceeding is to be handled under the modified procedure a decisional body will review the evidence and serve an initial decision on the parties.

(2) If the proceeding is to be handled by oral hearing, parties will receive a notice to this effect.

(o) *Applicant withdrawal.* (1) If applicant wishes to withdraw an application, it shall request dismissal in writing. This request shall be directed to the Office of the Secretary, Interstate Commerce Commission, Washington, DC 20423, with the docket number of the case.

§ 1100.247(B) How to oppose requests for authority.

(a) *How to oppose a request for permanent authority.* (1) A person whishing to oppose a request for permanent authority files a *protest.* A person filing a valid protest becomes a *protestant.*

(2) A protest must be filed (received at the Commission) within 45 days after notice of the application appears in the Federal Register. A copy of the protest must also be sent to applicant, see § 1100.247(C)(b).

(3) Failure to file timely a protest waives participation in the proceeding.

(b) *Contents of the protest.*

(1) All information upon which the protestant plans to rely is put into the protest.

(2) A protest must be verified.

(3) A protest not in compliance with these rules may be rejected.

(4) A protestant shall submit two (2) kinds of evidence. The first is its *qualifications* evidence. All protestants shall submit the evidence listed below under the qualifications format. Protestants shall also file *factual* evidence, according to the guidelines set forth in the *factual format.* Protestants to fitness related applications follow a separate factual format.

(c) *Qualifications format.* This information shall be submitted in separately numbered paragraphs.

(1) Name and domicile of protestant, including lead docket number, if any.

(2) Name and address of protestant's representative (if any).

(3) Name and address of witness presenting the evidence, and why qualified to speak for protesting party.

(4) Description of the extent to which the person seeking to protest possesses authority to handle the traffic for which authority is applied, is willing and able to provide service that meets the reasonable needs of the shippers or public involved, and has either performed service within the scope of the application during the 12 month period before the application was filed or has actively in good faith solicited service within the scope of the application during that period; *or*.

(5) Description of any application which the prospective protestant has pending before the Commission which was filed before applicant's application and which is substantially for the same traffic; *or*

(6) Description of any other legitimate interest not contrary to the transportation policy set forth in 49 U.S.C. 10101(a), or of any right to intervene under a statute. A person seeking to qualify under this paragraph shall only be permitted to protest under extraordinary circumstances, and shall describe in detail those circumstances and how they are consistent with 49 U.S.C. 10101(a).

Note.—A motor contract carrier of property may not protest an application to provide transportation as a motor common carrier of property.

(d) *Factual evidence format (except fitness related applications).* (1) A description or copy of the *specific pertinent* authority in conflict with that sought in the application (do not send copies of *all* authorities).

(2) A description of the type and amount of equipment and facilities available to meet the avowed purpose of the application.

(3) A description of its present operations that pertain to the application, including a description of the specific services provided to those supporting the application or within the same territory.

(4) Adverse impacts on its business generally and on the public, such as: (i) Need to close terminals or other facilities; (ii) number of employees that would be furloughed or dismissed; (iii) resulting imbalance or inefficiencies caused to its operations; (iv) effects on fuel efficiency; or (v) inability to continue its existing service to the public due to a reduction in total business, or loss of essential services that would not be replaced, or other factors.

(5) Evidence that applicant is not fit, willing or able to comply with the appropriate statutes or regulations governing its activities.

(6) Legal or other argument (optional), any request for oral hearing.

(7) Verification.

(8) Certificate of service.

(e) *Factual evidence format for fitness related applications—Scope.* The types of applications listed in § 1100.247(A)(b) may be protested only on the grounds that the applicant is not fit, willing, and able to provide the transportation to be authorized by the certificate and to comply with the appropriate statutes and Commission regulations. Factual evidence in opposition shall consist of the following:

(1) A description of the specific grounds upon which it is alleged that applicant cannot meet the statutory fitness criteria.

(2) Alternatively, evidence that the application does not properly fall within the scope of one of the six statutorily described categories.

Note.—If the Commission finds that the application does not properly fall within the scope of one of the six categories, the application shall be dismissed without prejudice to the filing of an application for authority under other criteria.

(3) Legal argument (optional); any request for oral hearing.

(4) Verification.

(5) Certificate of service.

(f) *Requests for oral hearing.* (1) It is the policy of the Commission to handle application proceedings under § 1100.247 using the modified procedure if at all possible. If a person believes that a proceeding should be orally heard because of the significance of the case, or because material issues are in dispute, the person may request oral hearing. (Protestants shall file any request under § 1100.247(B)(d)(6) or § 1100.247(B)(e)(3).)

(2) The request shall specifically state the evidence that would be presented, the reason why the evidence is material to determine the merits of the proceeding, why an oral hearing with cross-examination is necessary to bring it out, and what evidence already in the record would be contravened (with specific page reference).

(3) Denial of an oral hearing request will not be made in writing. The request will be deemed denied when the proceeding is handled under the modified procedure.

(g) *To whom the protest is sent.* (1) An original and one copy of the protest is to be sent to the Office of the Secretary, I.C.C., Washington, D.C. 20423. The docket number of the proceeding shall be placed conspicuously on the top of the first page of the protest.

(2) Concurrently with the filing in (g)(1) of this section, a copy shall be sent to applicant (to its representative, if one is listed).

(h) *Obtaining a copy of the application.* (1) A copy of the application is available for inspection at the Commission's offices in Washington, D.C., or the regional office of applicant's domicile. In addition, applicant is required to send a copy to interested persons upon payment of a $10.00 charge. See 49 CFR 1100.247(A)(1)(3).

(i) *Withdrawal.* (1) A protestant wishing to withdraw from a proceeding shall inform the Commission and the applicant in writing.

§ 1100.247(C) General rules governing the application process.

(a) *Contacting another party.* (1) When a person wishes to contact another party or serve a pleading on that party, it shall do so through the party's representative (if any).

(b) *Serving copies of pleadings, and the certificate of service.* (1) Where the rules require service of a pleading on another party, that pleading shall be mailed or delivered by hand concurrently with its service on the Commission.

(2) The pleading shall contain a statement (certificate of service) that the pleading has been mailed or hand delivered in accordance with paragraph (b)(1) of this section.

(3) All motions and replies shall be served on all parties.

(4) All pleadings mailed to the Commission in Washington, D.C., should be addressed to "Office of the Secretary, I.C.C., Washington, D.C., 20423".

(c) *Copies.* (1) All material forwarded to the Commission in Washington, D.C., shall consist of an original and one copy.

(d) *Requests for extensions of time.* (1) Requests for extensions of time may be granted only in extraordinary circumstances. Parties' or their representatives' workload, personnel change, or scheduling problems are not sufficient cause.

(2) No extension will be granted for more than 3 working days.

(e) *Verification of statements.* (1) All statements and shipper certifications (except motions to strike and their replies) must be verified by the person offering the statement.

(2) The facts asserted shall be sworn to as true, and within the knowledge of the person offering the statement. The original of any pleading shall show the signature, capacity and impression seal of the person administering the oath, and the date of the oath.

(f) *Caption summary.* (1) The caption summary which must accompany all applications shall be in the form prescribed by the Commission. Commission field and regional offices offer assistance in preparing correct caption summaries.

Appendix

Verified Certification of Shipper or Witness Support to the Interstate Commerce Commission:

I, or the corporation or other business entity which I represent, agree to support the application filed by

(Name of Applicant) _____

The following information describes the type of traffic or passenger movements that could be made under the authority sought by the applicant.

Note: It should not be necessary to use more space than is supplied in this form. However, if desired, additional sheets may be attached.

(1) Legal name and domicile of corporation or other business entity being represented:

_____

_____

(2) Identity of witness, and if representing a person named in (1) above, why qualified to speak in behalf of that person:

_____

_____

(3) General description of business entity:

_____

_____

(4) Description of commodities which would be transported under the sought operating authority (Not applicable in passenger applications):

_____

_____

(5) Amount of traffic that would be tendered to applicant if the application were granted (Number of trips in passenger applications):

_____

_____

(6) Representative origins and destinations of supporting shipper's traffic (or trips in passenger cases):

_____

_____

(7) Transportation services now employed by shipper or passengers (if any):

_____

_____

(8) Unsatisfactory aspects of these services (if any):

(9) Any specific or specialized service needs:

(10) Any other information:

The undersigned shipper or witness certifies that its support for this application was first made known to applicant on ———. (Date)

By signing and submitting this Certificate of Support I, the undersigned, individually and on behalf of the corporation, association, or partnership I represent, certify to the Commission that I or an authorized and qualified representative of the corporation, association, or partnership, will appear and testify on applicant's behalf in any oral hearing on this application. (This certification should not be signed unless there is a need for the proposed service and a present intent to testify in support of the applicant, and any withdrawal should be the result of the shipper's individual decision.)

Should the support for this application be withdrawn or changed in whole or in part, the undersigned agrees immediately so to inform the Interstate Commerce Commission, Washington, DC 20423.

Oath

County of ———
State of ———

I, (Name of Affiant) ———, being duly sworn, state I am qualified and authorized to make this certification of support, and that in signing this certification am aware that anyone who, in any matter within the jurisdiction of an agency of the United States, intentionally makes or uses false, fictitious, or fraudulent writing or document, may be subject to prosecution and fined up to $10,000 and imprisoned for up to 5 years. (18 U.S.C. 1001).

(Firm, corporation, association partnership, etc., represented, if any.)

(Signature of Affiant) ———
(Title) ———
(Type Name) ———
(Complete Address) ———

Subscribed and sworn to before me, a ——— in and for the State and County above named, this ——— day of ———, 19—.

(Seal)
My Commission expires ———

Appendix B

Form OP-1 (Supercedes forms formerly numbered OP-OR-9, OP-OR-11, OP-FF-10, OP-WC-10, and OP-WC-20)

Before the Interstate Commerce Commission

Docket No. ——— (Office use only)

Application for motor or water carrier certificate or permit, brokerage license, freight forwarder permit, or water carrier exemption.

Note.—Read attached instructions before answering.

I. (a) Application of

(Name and Trade Name, if any) ———

(State whether an individual, partnership, corporation, association, fiduciary, or other legal entity. If a partnership, give names and addresses of all partners. If a corporation, give name of State in which incorporated, and the names and addresses of all directors and officers.)

whose business address is: (Street) ———
(City) ———
(State and Zip Code) ———

(b) Applicant's representative to whom inquiries may be made:
(Name) ———
(Street Address) ———
(City) ———
(State and Zip Code) ———
(Telephone number including Area Code) ———

II. Type of authority sought (check all applicable boxes):

☐ Motor carrier
☐ Water carrier
☐ Broker
☐ Freight forwarder
☐ Common carrier
☐ Contract carrier
☐ Property
☐ Passengers

Water carrier exemption:

☐ Under 49 USC 10544(e)
☐ Under 49 USC 10544(f)
☐ Under 49 USC 10544(c)

III. Will granting the authority or exemption sought in this application constitute a major Federal action having a significant effect on the quality of the human environment? ☐ Yes ☐ No

If Yes, a statement complying with the requirements of 49 CFR Part 1108 must be attached to this application.

IV. Is this application a major regulatory action under the Energy Policy and Conservation Act of 1975? (Refer to 49 CFR 1106.1 through 1106.6, especially 1106.5). ☐ Yes ☐ No.

If Yes, attach information as to why this proceeding is a major regulatory action, and a description of important energy impacts.

V. Is this a fitness related application, as listed in 49 CFR 1100.247(A)(b)? ☐ Yes ☐ No

If Yes, list type: ———

VI. If applicant now holds, or has an application pending for authority from this Commission, identify the lead docket number:

VII. (a) Indicate any interest (whether stock, loans, voting, or management arrangements) which the applicant or any officer or director of applicant, has in the affairs of other transportation entities:

(b) Indicate any interest (whether stock, loans, voting or management arrangements) which any transportation entity, including officers and directors, or any person authorized to control a transportation entity, has in the affairs of applicant:

(c) Indicate any interest (whether stock, money, or management arrangements) in the applicant by any person who also holds an interest (whether stock, money, voting, or management arrangements) in another transportation entity:

VIII. *Contract carrier applicants only:*

(a) If applicant seeks contract carrier authority, list the person(s) (firm)(s) it would serve in the proposed operation:

(b) If applicant seeks motor contract carrier authority, state the manner in which contractual provisions are to be fulfilled (i.e., either (1) by furnishing transportation service through the assignment of motor vehicles for a continuing period of time to the exclusive use of each person served, or (2) by furnishing transportation services designed to meet the distinct need of each individual customer, and if the latter, describe briefly the distinct need for which transportation services have been designed):

IX. *Freight forwarder applicants only:*

(a) Is applicant a person engaged principally in the business of manufacturing, buying, or selling articles and commodities, or does it control, is it controlled by, or is it under common control with any such person?
☐ Yes ☐ No

(b) If Yes, identify such person or persons and advise to what extent such person uses the services of freight forwarders, or if applicant is such person, whether applicant performs its own similar operations of assembling, consolidating, and shipping in connection with the transportation of such articles or commodities.

X. *Water carrier applicants only:*

(a) If exemption is claimed for any operation, describe the operations and in each instance refer to the statutory provisions under which the exemption is claimed.

(b) Is applicant for exemption under 49 U.S.C. § 10544(f) engaged solely in transporting the property of the parent company? ☐ Yes ☐ No

If Yes, list persons owning all or substantially all of the voting stock of applicant.

(c) If applicant seeks approval of dual operations under 49 U.S.C. 10930, specify those that would result from a grant of this application.

(d) An applicant for exemption under 49 U.S.C. 10544(e) shall furnish a copy of the charter, lease, or other agreement under which it proposes to operate.

(e) If applicant is a water common carrier seeking a revised certificate covering extension of services pursuant to 49 U.S.C. § 10922(e)(3)(B), the following information should be furnished:

Describe portion of waterway project newly opened for navigation:

(1) U.S. Engineer Disrtrict.
(2) Project No.
(3) Description of project.
(4) Date opened for navigation.
(5) Describe operations performed thus far on uncompleted portion of waterway newly opened for navigation, including date service was extended and points served. See 49 CFR 1140.2.
(6) Describe operations performed under present certificate authorizing service on previously completed portion of waterway. Name points served, indicating when service commenced, and if operation has not been continuous, give full information.

XI. *Regular-route motor carrier applicants only:*

Submit a detailed map of the proposed operation and pertinent connecting portions of applicant's present authority.

XII. If the application is set for oral hearing, in which city does applicant prefer the hearing to be held? (list alternate).

1. ———— 2. ————

XIII. Applicant also must append to this application form the information called for in paragraph X. of the instructions. Applicant understands that the filing of this application does not, in itself, constitute authority to operate.

Applicant's Oath

County of ———— ————

State of———— ————

I, ————(Name of Affiant), being duly sworn, file this application as (indicate relationship to applicant, that is, owner or proprietor, title as officer of applicant corporation or association, member of applicant partnership, or other authorized representative of applicant)

————————————————;

and in such capacity, I am qualified and authorized to file and verify the application and to certify with respect to the availability of shipper and public witnesses to present evidence in support; I have carefully examined all the statements and matters contained in the application and they are true and correct to the best of my knowledge, information, and belief. The application is made in good faith, with the intention of presenting evidence in support in every particular.

Knowing and willful misstatements or omissions of material facts constitute federal criminal violations punishable by up to five years imprisonment and fines up to $10,000 for each offense. (See 18 U.S.C. 1001.)

————(Signature of Affiant)————

Subscribed and sworn to before me, a ———— in and for the State and County above named, this —— day of————, 19——.

————————————————

(SEAL)

My Commission expires ————. ————

Certificate of Service

I certify that I have delivered a copy of this application, in person or by mail, to the following Regional Director of the Commission's Office of Consumer Protection for the Region in which the applicant has its headquarters:

Name of Regional Director ————

Address————

I further certify that I have delivered a caption summary (as described in the instructions to this form), in person or by first-class mail to the appropriate State Board (or official) of applicant's State of domicile:

Name of State Board ————

Address————

If a copy of the application is desired by the appropriate State Board (or official) in any State in or through which the operations described in this application would be performed or by that of applicant's State of domicile, the applicant will mail it upon written request.

Dated this ———— day of ————, 19——.

(Signature) ————

Instructions

I. The information called for in the application form shall be developed as briefly as possible.

II. Applicants should also consult Volume 49 of the Code of Federal Regulations, Part 1100, Section 247 (49 CFR 1100.247) which contains the rules governing these applications.

III. Certain applicants do not have to submit verified certifications of shipper or witness support. These include fitness related applications, as listed in 49 CFR 1100.247(A)(b); applicants for motor common carrier of property authority who wish to furnish their own evidence of public need; and applicants for water carrier exemption under 49 U.S.C. 10544.

IV. Where a question is inapplicable, write "N/A".

V. Applicant must submit with the application a check or money order made out to the Interstate Commerce Commission in the appropriate amount. See 49 CFR 1002.2. The fee is not refundable. The original and one copy should be submitted to the Secretary, Interstate Commerce Commission, Washington, D.C. 20423. Copies must also be served on the parties noted on the form.

VI. If the space provided in the form is not sufficient, attach separate sheets with applicant's name on the top, and use the same number as the paragraph in the form to which the answer refers.

VII. Applications made out in pencil will be rejected. Please submit a typewritten form if possible.

VIII. Assistance in filling out a form may be obtained from regional and field offices of the Commission. Before requesting assistance, prepare a draft of the application to be used as a basis for discussion.

IX. Keep a copy of the application for future reference.

X. *Caption summary.* All Applicants must attach a caption summary on a separate sheet which describes the authority (or exemption) sought. The acceptable format may be obtained from a Commission regional or field office.

Appendix C

Proposed and Interim Revisions to Title 49, Code of Federal Regulations

PART 1002—FEES

§ 1002.2 [Amended]

409 CFR 1002.2(d) revised as follows:

(1) Subparagraphs (2), (9), (10), (11), (14), and (15) are deleted, and their numbers reserved for future use.

(2) Subparagraphs (3) and (4) revised to read:

* * * * *

(d) * * *

(3) An application for motor or water carrier operating or exemption authority, a certificate of registration, or an application for broker or freight forwarder authority, $350.

(4) A request seeking the modification of operating authority only to the extent of making a ministerial correction, a change in the name of the shipper or owner of a plantsite, or the change of a highway name or number, no fee.

PART 1003—LIST OF FORMS

49 CFR 1003 revised by deleting the following forms: OP-OR-9, OP-OR-11, OP-FF-10, OP-WC-20, OP-WC-10, and B.W.C. 1.

49 CFR 1003 revised by the addition of the following form:

OP-1

Application for motor or water carrier authority, broker or freight forwarder authority, and water carrier exemption.

PART 1056—TRANSPORTATION OF HOUSEHOLD GOODS IN INTERSTATE OR FOREIGN COMMERCE

§ 1056.40 [Deleted]

PART 1062—REGULATIONS GOVERNING SPECIAL APPLICATION PROCEEDINGS FOR FOR-HIRE MOTOR CARRIERS [DELETED]

PART 1130—APPLICATIONS FOR MOTOR CARRIER CERTIFICATES AND PERMITS [DELETED]

PART 1150—APPLICATIONS FOR PERMITS [DELETED]

49 CFR 1056.40, 1062, 1130 and 1150 to be deleted.

PART 1100—GENERAL REQUIREMENTS

§ 1100.247 [Amended]

49 CFR 1100.247 revised by deleting the present material and replacing it with the material set forth at Appendix A in §§ 1100.247(A) through 1100.247(c).

[FR Doc. 80-19939 Filed 7-2-80; 8:45 am]

BILLING CODE 7035-01-M

INTERSTATE COMMERCE COMMISSION

49 CFR Ch. X

[Ex Parte No. MC-135]

Master Certificates and Permits

AGENCY: Interstate Commerce Commission.

ACTION: Notice of discontinuance of rulemaking proceedings.

SUMMARY: The Commission previously announced its intention to conduct rulemaking proceedings for the purpose of possibly easing entry requirements in 12 specified fields of for-hire motor carrier transportation. In each proceeding, the Commission intended to explore the issuance of a master certificate of public convenience and necessity and, in some instances, a master contract carrier permit. The Motor Carrier Act of 1980, specifically prohibits the master certificate and permit approach to granting operating authority. Accordingly, all Ex Parte No. MC-135 proceedings are discontinued.

FOR FURTHER INFORMATION CONTACT: Peter Metrinko, (202) 275-7885. Donald J. Shaw, Jr., (202) 275-7292.

SUPPLEMENTARY INFORMATION: In May, 1979, the Commission's Motor Carrier Task Force issued its Initial Report, recommending eased entry into several specialized segments of the motor carrier industry. In a notice of intent to open rulemaking, Ex Parte No. 135, *Master Certificates and Permits*, decided September 20, 1979, (44 FR 57139), we advised the public of our intent to institute separate formal proceedings to consider the Task Force's recommendations for each of the following specialized fields of transportation:

Sub-No. 1—Heavy and Specialized Haulers (including oilfield haulers and others).
Sub-No. 2—Temperature Controlled Service.
Sub-No. 3—Lumber and building materials.
Sub-No. 4—Metals.
Sub-No. 5—Bulk Materials.
Sub-No. 6—Household Goods.
Sub-No. 7—Armored Car & Related Services.
Sub-No. 8—Vehicles (haulaway).
Sub-No. 9—Wrecker Service.
Sub-No. 10—Boats.
Sub-No. 11—Courier Services.
Sub-No. 12—Film Carriers.

In each of these proceedings, the Commission intended to explore the merits of issuing a master certificate of public convenience and necessity and, in some instances, a master contract carrier permit. The proposal envisioned the adoption of simplified licensing procedures under which all qualified applicants could perform motor carrier service in the various identified market segments.

To implement this master certificate and permit approach, the Commission would have to make a prospective general finding that the public convenience and necessity require the transportation of the commodities embraced in each of the identified fields of transportation. Operations under contract with a shipper or shippers would have to be prospectively found to be consistent with the public interest and the national transportation policy.

Section 5 of the Motor Carrier Act of 1980, added a new subsection (b) to 49 U.S.C. 10922 which, as pertinent, provides as follows:

> (b)(3) The Commission may not make a finding relating to public convenience and necessity under paragraph (1) of this subsection which is based upon general findings developed in rulemaking proceedings.

Similarly, section 10 of the Act added a new paragraph (6) to 49 U.S.C. 10923(b) which provides as follows:

> (6) With respect to applications of persons for permits as motor contract carriers of property, the Commission may not make a finding relating to the public interest under subsection (a)(2) of this section which is based upon general findings developed in rulemaking proceedings.

In adding these two provisions to the Interstate Commerce Act, Congress clearly intended to prevent the Commission from pursuing the master certificate and permit approach. It is the intention of this Commission to implement and administer as fully and expeditiously as possible the will of Congress as expressed in the new legislation. Accordingly, the 12 sub-numbered Ex Parte No. MC-135 Proceedings are discontinued.

Decided: June 27, 1980.

By the Commission, Chairman Gaskins, Vice Chairman Gresham, Commissioners Stafford, Clapp, Trantum, Alexis and Gilliam.

Agatha L. Mergenovich,

Secretary.

[FR Doc. 80-19940 Filed 7-2-80; 8:45 am]
BILLING CODE 7035-01-M

---

49 CFR Ch. X

[Ex Parte No. 55 (Sub-No. 43A)]

Acceptable Forms of Requests for Operating Authority (Motor Carriers and Brokers of Property)

AGENCY: Interstate Commerce Commission.

ACTION: Notice of proposed policy statement.

SUMMARY: Consonant with Congressional intent, as expressed in the Motor Carrier Act of 1980, the Interstate Commerce Commission is proposing to revise the acceptable forms of requests for operating authority for motor carriers and brokers of property. The proposed policy would affect all future motor carrier and broker of property applications. It involves (1) broadening commodity and territorial descriptions, and (2) prohibiting most restrictions. Commodity descriptions would be phrased in terms of the two-digit STCC industry groupings. Territorial authority would require that applicants seek two-way authority only. No plantsite, interlining, commodity, and equipment restrictions would be accepted. The proper forms of requests for "fitness related applications" are also defined.

DATE: Comments are due on or before September 2, 1980.

ADDRESSES: Send an original and 15 copies, if posible, of comments, to: Ex Parte No. 55 (Sub-No. 43A), Room 5316, Office of Proceedings, Interstate Commerce Commission, Washington, D.C. 20423.

FOR FURTHER INFORMATION CONTACT: Peter Metrinko, 202-275-7885 or Laurence Schecker, 202-275-7893.

SUPPLEMENTARY INFORMATION:

Background

Congressional efforts to reduce unnecessary regulation by the Federal Government have resulted in a re-evaluation of Federal regulation of the motor carrier industry. The Motor Carrier Act of 1980 (the Act) recognizes the evolution undergone by the trucking industry since the inception of Federal regulation in 1935, and revises the statutory basis of that regulation to reflect the transportation needs of the 1980's.

Review by Congress of the statutes and regulations governing the motor carrier industry has shown that historically the existing regulatory structure has tended to inhibit market entry, carrier growth, maximum utilization of equipment and energy resources, and opportunities for minorities and others to enter the trucking industry. The Act amends existing statutes to promote a safe, sound, competitive, and fuel, efficient motor carrier system. To that end, the Interstate Commerce Commission is specifically mandated to continue to promote a more efficient and

competitive transportation system, within the parameters set by Congress in the amended National Transportation Policy, 49 U.S.C. 10101, and the standards for granting certificates, 49 U.S.C. 10922, and permits, 49 U.S.C. 10923. Additionally, the Commission must take into account expressed Congressional intent that grants of authority be broad in scope, and unencumbered by restrictions. See 49 U.S.C. 10922(h).

Consistent with Congressional intent, the Commission proposes to adopt a general policy statement to provide guidelines for applicants seeking motor carrier and broker of property operating authority. The expressed policy of the Commission would be to authorize, whenever possible, broad grants of authority. Broad categories would be used in commodity and territorial descriptions. The Commission would also endeavor to grant broad operating authorities by eliminating the use of many restrictions commonly found in existing certificates and permits.

Statutory Powers

The Commission has statutory power to implement the provisions of the Act by adopting rules and regulations regarding issuance of permits and certificates. See 49 U.S.C. 10321. Moreover, 49 U.S.C. 11102 empowers the Commission to "classify and maintain requirements for certain carriers and brokers when required because of the special nature of the transportation provided by them." These powers are closely allied with the powers conferred by 49 U.S.C. 10922(e)(3) and 10923(d)(1) which allow the Commission to impose restrictions on grants of authority, and implies the power to remove such restrictions when they are no longer necessary. See *Regular Common Carrier Conference* v. *United States*, 307 F. Supp. 941 (D.D.C. 1969). The power of the Commission to promulgate regulations is broad in scope, and the Commission may use its entire discretionary power in devising such regulations. *American Trucking Ass'n* v. *United States*, No. 78-2260 (D.C. Cir. filed April 24, 1980).

The Commission exercised its powers to classify carriers in *Classification of Motor Carriers of Property*, 2 M.C.C. 703 (1937), and has since created additional carrier classifications and established various requirements for different carrier classes. See *Descriptions in Motor Carrier Certificates*, 61 M.C.C. 209 and 766 (1952) (defining the scope of certain generic commodity classifications), *Modification of Permits—Packing House Products*, 46 M.C.C. 23 (1945) (recognizing a class of carriers serving meat packing houses and establishing a generic commodity classification), and *Motor Common Carriers of Property—Routes and Services*, 88 M.C.C. 415 (1961) (classifying routes). Many instances requiring the Commission to interpret classifications and various requirements for these specialized carriers still arise. Recent examples include *Perkins Furniture Transport, Inc., Extension*, 128 M.C.C. 851 (1978), where it was decided that pianos and organs are embraced in the generic description, "new furniture," *Whiteford Transport, Inc., Van Conversion*, 131 M.C.C. 813 (1978), where it was decided that van conversions are passenger automobiles which may be transported by specialized automobile carriers, and *Interpretation of Aggregated Commodities*, 131 M.C.C. 779 (1979), where the types of aggregated commodities handled by heavy haulers were identified.

The power of the Commission to impose conditions on operating authorities, or remove conditions when they become unnecessary, has been exercised on many occasions. In *Fox-Smythe Transp. Co. Extension—Oklahoma*, 106 M.C.C. 1, 6 (1967), the Commission discussed extensively the imposition of restrictions on grants of operating authority under the present 49 U.S.C. 10922(e)(3), and the authority to require applicants to draft "proper and workable motor carriers applications and * * * to remove some of the confusion that now seems to exist in the area of restrictions and commodity descriptions generally." The courts have upheld the Commission's power to impose restrictions on groups of authorities which have been previously issued, see *Thompson Van Lines* v. *United States*, 399 F. Supp. 1131 (D.D.C. 1975), as well as the power to remove certain restrictions, see *Regular Common Carrier Conference* v. *United States, supra*.

The proposed policy statement is an extension of these prior proceedings in light of the recent Congressional action.

Purpose of Our Proposal

Passage of the new motor carrier legislation requires development of more workable and acceptable forms of motor carrier authority. Three basic areas require attention: commodity descriptions, territorial descriptions, and miscellaneous restrictions. We will also address the standards for the "fitness related applications" of 49 U.S.C. 10922(b)(4), 10923(b)(5)(A), and 10924(b).

The impetus for this proposed change of policy is to foster more competition and greater operating flexibility in the motor carrier industry. We have recognized, as has the Congress, that a bewildering array of encumbered operating authorities has developed. Many of the motor carrier authorities now being issued have minutely described commodity descriptions, with vehicle, plantsite, and other restrictions attached.

The primary purpose of this practice has not been to assure complete service to the shipper, but rather to eliminate potential opposition. Carriers often amend their original applications to satisfy the demands of certain special interests.

The Motor Carrier Act favors additional competition and greater operating flexibility in the industry. It also expresses a policy that shippers' and receivers' needs be met. Our proposed policy with regard to commodity descriptions, and the other descriptions discussed below, are consistent with the policies of the Act.

Acceptable Commodity Descriptions

From the inception of regulation of the motor carrier industry, commodity descriptions have presented the Commission with problems of interpretation and enforcement. Attempts have been made to develop a consistent methodology for describing commodities, and three principal formulas have been used: (1) Specific naming of a commodity, (2) reference to intended future use, and (3) generic or class-term commodity descriptions. See *C & H Transp. Co. Inc., Interpretation of Certificate*, 62 M.C.C. 586 (1954), *aff'd sub nom Arrow Trucking Co.* v. *United States*, 181 F. Supp. 775 (N.D. Okla. 1960). However, many descriptions in certificates dated back to original "grandfather" grants of authority, and were based on industry usage and outdated or inept choices of generic terms in certificates. See, e.g., *Eclipse Motor Lines, Inc., Interpretation of Certificate*, 52 M.C.C. 391, 392-93 (1951).

The Commission sought to deal with problems in the commodity descriptions in the *Descriptions* case, *supra*, by exploring the possibility of listing commodities transported by specialized motor carriers. The result was establishment of set commodity lists under class or generic headings, and defining certain standardized commodity descriptions for particular services.[1] The *Descriptions* case did

[1] The *Descriptions* case contained several appendices, listing commodities considered as falling under these generic headings: (a) Meats, packinghouse products, and commodities used by packinghouses, (b) new furniture (uncrated), (c) kitchen equipment, (d) iron and steel articles, (e)

Footnotes continued on next page

success in defining many classes of commodities, but did not succeed in solving the all interpretative and definitional problems regarding commodities. Attempts continued to establish additional classes of commodities [2] and numerous cases continued to issue interpretations of specific commodities.[3]

The Commission has always sought to act under the general policy of issuing grants of authority with broad commodity descriptions. *Fox-Smythe Transp., supra,* at 28. A primary concern of the Commission in framing grants of authority has always been to enable a carrier to render shippers and the public a complete transportation service. Broad grants of authority also take cognizance of technological modifications, changing industrial patterns and future needs. Moreover, broad commodity authorizations allow carriers to meet changing needs of shippers, receivers, and consumers, market demands, and the diverse requirements of the shipping public. See the National Transportation Policy, 49 U.S.C. 10101(a)(7) (A) and (B).

Congress has mandated that the Commission "reasonably broadened the categories of commodities authorized by the carriers' certificate or permit," 49 U.S.C. 10922(h)(1)(B)(i). While this mandate applies to existing certificates and permits, we believe that it is the intent of Congress that all future grants of authority contain reasonably broad commodity descriptions.

To implement the intent of Congress, we propose that all future grants of motor carrier of property operating authority use broad industry groupings similar to the major industry groupings contained in the Standard Transportation Commodity Code (STCC). The STCC lists 37 industry groupings, with each heading referencing a listing of commodities considered to be part of that group. These listings are presently used by the railroads for tariff purposes. We propose to adapt and expand the codes for use by the motor carrier industry. A carrier authorized to transport a certain industry grouping would be entitled to transport all commodities included in that grouping.

However, several difficulties are presented by this proposal. The STCC is designed for use by the railroads, and as such it is adapted for their needs. We have reviewed the National Motor Freight Classification, but it does not appear to be as adaptable as the STCC codes because it uses commodity clarifications that may be too narrow. We acknowledge that the needs of the motor carrier industry differ, and if we are to use the STCC in drafting operating authorities, certain modifications may have to be made.

Several of the problems we envision with adoption of the STCC include:

(1) What commodities or classes of commodities, if any, are not included in the STCC listings? And what provisions should be made for newly developed commodities? An obvious solution to this problem—although perhaps not the best one—may be require carriers to seek authority specifically to transport those commodities. Comments concerning this proposal should alert the Commission to such commodity omissions from the STCC.

(2) What effect would shifts in the commodity groupings by the designers of the STCC have on existing authority? Once a carrier is granted authority to transport the commodities contained in a STCC grouping, the Commission (or any other agency or body) may not revoke that authority. Deletions from the list would pose only theoretical problems, as such occurrences are rare or non-existent. Additions may not be made to authority without meeting the statutory requirements for additional authority.

We believe that this problem may be addressed in a manner similar to the solution of the problems raised by expanding commercial zones. Current interpretations involving expansions of commercial zones hold that such expansions cannot diminish the authority held by carrier. Thus, if a carrier is authorized to serve points in Illinois (except the Chicago, IL, commercial zone), expansion of that zone does not affect the territory the carrier is authorized to serve. Rather, reference is always made to the scope of the territory when the certificate or permit was granted. Therefore, we believe that a carrier might be authorized to transport one or more of the STCC groupings, which would remain constant regardles of any subsequent changes in the STCC listings. Any additions to the STCC listings would require a carrier to apply for modification of its certificate or permit, in compliance with the statutory requirements.

Alternatively, additions to the STCC code listings may be considered as adding to the scope of authority held by a motor carrier or property. Thus, if a new product not currently listed in a specific grouping is developed, and subsequently added to a grouping, any carrier authorized to transport that grouping would be authorized to transport the new product. Under this proposal, a commodity description would be similar to the currently used open-ended descriptions, such as chemicals, which enable a carrier to transport any product falling under that description, whether the product exists now or is developed in the future.

(3) Another possible issue raised by the proposal to adopt STCC-type listings would be the potential effect of Commission operating rights descriptions being governed by an outside authority. This might present a question of delegation of Commission authority to the STCC tariff agents. However, the Commission would adopt the commodity lists and retain jurisdiction over the lists and any changes in them. As the Commission would adopt the STCC listings by reference, we do not believe this would present a problem.

(4) The STCC groupings are not established by type of service, but rather by commodities only. In the past, the Commission has granted commodity descriptions in operating authority based upon type of service, e.g., commodities in bulk, or commodities requiring specialized equipment, or for service that is highly specialized, e.g., *armored car service.* The STCC groupings do not make provisions for such groupings. In addition, the Commission has developed broad commodity descriptions in special cases, such as oil field commodities as described in *Mercer Extension—Oil Field Commodities, supra,* and the classifications in the *Descriptions* case, *supra.* Comments should address the desirability of retaining these descriptions, and the problems that may arise due to overlap with the proposed STCC-type descriptions.

(5) A commodity description now regularly used in certificates and permits is "materials, equipment, and supplies used in the (manufacture, sale, and distribution) of (named commodities)." None of the proposed commodity codes use this description. Comments should address the desirability of retaining this description.

(6) Last, several of the STCC groupings are not consistent with Commission jurisdiction or regulation.

Footnotes continued from last page

building materials, (f) electrical appliances, equipment, and parts, (g) road construction machinery and equipment, (h) glass and glassware, (i) clothing and wearing apparel, and component parts used in the manufacture thereof, (j) paper and paper articles, (k) agricultural machinery, implements, and parts, (l) petroleum and petroleum products, in tank vehicles, (m) coal tar products, in tank vehicles, and (n) acids and chemicals, in tank vehicles.

[2] See *Mercer Extension—Oil Field Commodities,* 74 M.C.C. 459 (1946).

[3] See, e.g., *Definition of Cash Letters—Interpretation,* 131 M.C.C. 113 (1979).

Therefore, modification of those groups would be required.

First, we note that some of the STCC codes involve exempt commodities as defined in 49 U.S.C. 10526(a)(6). Applicants would not be required to seek authority under those groupings, or to transport commodities exempt under the statute.

Second, the statute establishes a fitness-related application procedure for the transportation of "food and other edible products (including edible byproducts but excluding alcoholic beverages and drugs) intended for human consumption, agricultural limestone and other soil conditioners, and agricultural fertilizers" by owner-operators in common or contract carriage. See 49 U.S.C. 10922(b)(4)(E) and 10924(b)(5)(A). These sections of the statute do not totally exempt foodstuffs from economic regulation, and therefore we would retain the STCC code for food or kindred products. As some of the commodities included in this STCC grouping are exempt, we would modify the classification to read "non-exempt food or kindred products." In other groupings that include both exempt and non-exempt commodities, the title would be modified to specify that only non-exempt commodities are being authorized.[4]

Next, there is no STCC listing for general commodities. The description general commodities includes all types of commodities, except those specifically excluded. *Coastal Tank Lines, Inc.* v. *Charlton Bros. Transp. Co. Inc.*, 48 M.C.C. 189 (1948). The Commission has long recognized that carrirs of general commodities belong to a specialized group, rendering a specialized service to shippers and receivers. Grants of general commodities authority have consistently excepted certain commodities.[5] See *Comet Messenger & Deliv. Serv., Inc., Com. Car. Applic.*, 111 M.C.C. 13, 18 (1970), and *Watkins Motor Lines, Ext.—General Commodities*, 113 M.C.C. 658, 670 (1971).

To continue the type of transportation provided by general commodities carriers, we propose to establish a new STCC-type grouping for commodity description purposes, to be designated group 51, general commodities (except household goods as defined by the Commission, and classes A and B explosives). We believe that the only purpose to be served by retaining exceptions for commodities in bulk, commodities requiring the use of special equipment, and commodities of unusual value, would be to protect the specialized carriers denoted by the exceptions. Such a purely protectionist attitude appears to be contrary to the intent of Congress that the Commission issue grants of authority with broad commodity descriptions, see 49 U.S.C. 10922(h)(1)(B)(i), and that the Commission encourage competition among motor carriers of property, see 49 U.S.C. 10101(a)(7). We would retain the exceptions for household goods as defined by the Commission, in light of the pending legislation regarding that segment of the transportation industry, and classes A and B explosives, in light of the safety considerations. However, this would not preclude an applicant from specifically seeking authority to transport those commodities.

Finally, adjustments to the STCC code must be made to adapt them to Commission jurisdiction. STCC groups 35 (Machinery, except electrical) and 36 (Electrical Machinery or Equipment, and Supplies) would be combined into one group, renumbered STCC group 35—Machinery and Supplies. This is for administative convenience.

STCC groups 44, 45, and 46 (Mail and Express Traffic, are not involved in transportation by motor carriers of property, and will be excluded. STCC group 47 (Small Packaged Freight Shipments) is described statutorily in terms of 100 pound shipments, see 49 U.S.C. 10922(b)(3)(D). This category is discussed below.

We foresee the possibility of problems in interpreting several of the STCC categories, e.g. STCC group 39 (Miscellaneous Products of Manufacturing), and STCC group 41 (Miscellaneous Freight Shipments). The commodities contained under these groupings are general miscellaneous commodities not contained in any other grouping. We see as one possibility abolishing these groupings, and subsuming the involved commodities in the general commodities category.

A revised listing of the STCC major industry groupings, modified as discussed above, is attached as Appendix A.

Despite the difficulties that may exist in adapting the STCC scheme to the motor carrier industry's operating authorities, we believe that investigation of the possibility is warranted. No system of commodity classification is going to be perfect. On the other hand, if we are able to use this or another classification system which defines and classifies commodities into readily distinguishable categories, everyone will benefit. Computerization of billing may be advanced. The Commission itself may be able to benefit from computer technology, and keep better track of operating authorities. Moreover, less effort will be required to interpret the lawful scope of an operating authority.

Acceptable Territorial Descriptions

Descriptions of territorial authority sought in operating rights applications have presented the Commission with interpretative and enforcement problems since the beginning of motor carrier regulations. Many proceedings have been instituted to clarify the scope of territorial descriptions. See, e.g., *Classification of Motor Carriers of Property*, 2 M.C.C. 703 (1937), *Transportation Activities, Brady Transfer & Storage Co.*, 47 M.C.C. 23 (1947), and *Motor Common Carriers of Property—Routes and Services*, 88 M.C.C. 415 (1961). The Motor Carrier Act of 1980 introduces new considerations into the Commission's issuance of routes and territorial descriptions. The Commission is now specifically mandated to consider fuel efficiency, productive use of equipment, service to small communities and small shippers, and changing market demands. 49 U.S.C. 10101(a)(7). Moreover, the Act states that the Commission must eliminate from existing certificates gateway restrictions and circuitous route limitations, unreasonable or excessively narrow territorial limitations, and any other territorial restrictions deemed to be wasteful of fuel, inefficient, or contrary to the public interest. 49 U.S.C. 10922(h)(1)(A), (B)(iv) and (v). The Commission is further directed to authorize intermediate point service where it was previously prohibited in regular-route service, and to provide round-trip authority where only one way authority exists. 49 U.S.C. 10922(h)(1)(B)(ii) and (iii). While these sections apply to existing certificates and permits, we believe that it is the clear intent of Congress that all future motor carrier and broker of property grants of authority contain reasonably broad territorial descriptions consonant with these sections.

Common Carriage: In the case of irregular-route authority, only two-way authority would be acceptable. Thus, the one-way radial description, "from * * * to", would no longer be used. Applicants could continue to seek either two-way radial authority ("between * * *, on the one hand, and, on the

[4] Applicants will not be required to seek authority to transport mixed loads of exempt and non-exempt commodities. See 49 U.S.C. 10526(a)(6) and 10528.

[5] Commodities in bulk, those requiring special equipment, commodities of unusual value, classes A and B explosives, and household goods as defined by the Commission, are usually excluded from general commodity grants of authority. These five categories have been consistently recognized to involve specialized services not normally transported by general commodities carriers. See 49 U.S.C. 10526(a)(6) and 10528.

other, * * *"] or non-radial authority ("between points in * * *"], as appropriate. If a carrier wants to transport a different commodity on its backhaul, it would apply for separate authority for that commodity.

Applicants have been permitted to describe origin or destination points specifically, indicating a named city or plantsite. All applications in the future would employ only county-wide descriptions (or the functional equivalent)[6] for the territory wished to be served. We believe this description is consistent with the intent of the Act.[7] The Commission has been expanding base territories beyond named cities, see 49 C.F.R. 1048.101–1048.102. Use of county-wide base or destination territories is consistent with the commercial zone theories long a part of Commission territorial descriptions.

County units are a reasonable choice as a minimum size unit. There are well defined territories. Most counties have related economic concerns. The county governmental unit and taxing powder provide a strong ecomomic bond. The typical county unit is sizeable enough so that undue fragmentation in operating authority would be avoided, yet it is small enough so that its business and inhabitants will share many of the same service needs.

Authorization of service involving points in the United States has routinely omitted points in Alaska and Hawaii. The Commission has often stated that specific authority is required for service to those two States. See *American International Driveway Ext.—Hawaii*, 117 M.C.C. 63, 67 (1972), and *United Van Lines, Inc., Extension—Alaska*, 99 M.C.C. 331 (1965). To promote the most competitive and efficient transportation system, meeting the goals of the National Transportation Policy, an applicant for operating authority will no longer have to specify Alaska and Hawaii in requests to operate in points in the United States.[8]

Regular Routes: The territorial distinction between irregular- and regular-route authority would be retained for the present. 49 U.S.C. 10922(d)(1)(B) and (C). However, modifications in the accepted regular-route descriptions would be implemented. Consonant with expressed Congressional intent, carriers would be required to seek two-way authority on their regular routes. This would eliminate the "from * * * to * * *" description, without return operations over the specified routes, and will also eliminate so-called "circular routes" which required the carrier to conduct only one-way operations.

In seeking regular-route authority, applicants would not be allowed to use intermediate-point restrictions. Regular-route service would be conducted between two named points, with service authorized to all intermediate points. Off-route point authority would continue to be an acceptable form of application for regular-route authority.

Contract Carriage: The Act modifies the requirements for contract carriage by amending 49 U.S.C. 10923, adding that the Commission may not require a contract carrier of property to limit its operations to carriage for a particular industry or within a particular geographic area. We believe that it was the intent of Congress to give property contract carriers wide latitude in providing service to the contracting shippers. Therefore, we would not require an applicant for contract carrier of property authority to specify the territory in which it will serve the contracting shippers. A proper application for this contract carrier authority would include the class of commodities to be transported, and the name of the supporting contracting shipper. The territorial scope of operations in all permits will be stated as "between points in the United States."[9]

Unacceptable Restrictions

The imposing of restrictions, whether to protect competing carriers from competition, or to define more clearly the authority granted based on the evidence of need for the proposed service, has been a part of the Commission's licensing operations since 1935. Many types of restrictions have been imposed, with the result that "* * * the existing regulatory system governing the interstate motor carrier industry contains numerous and unnecessary restrictions on the actual operations of the motor vehicle and the service that can be provided to the public." Senate Report, at 7. To remedy this situation, Congress has mandated that the Commission implement regulations to allow carriers to remove from their certificates unreasonable restrictions that are wasteful of fuel, inefficient, or contrary to the public interest. 49 U.S.C. 10922(h)(1)(B)(v).

The Commission believes that it is the intent of Congress to prevent the imposition of such restrictions in the future so that operating authority granted subsequent to the passage of the Act will not be encumbered by unreasonable restrictions. To that end, the Commission would no longer impose many of the restrictions now found in certificates.

The Commission holds a wide range of discretionary authority in determining where, on balance, the public interest requires that a restriction should be imposed. Cf. *Interstate Commerce Commission* v. *Parker*, 326 U.S. 60 (1945). Restrictions that are inconsistent with the public interest and inimical to practicable and effective regulations have long been rejected by the Commission. See, e.g., *J. E. Bejin Cartage Co. Contract Carrier Application*, 53 M.C.C. 255 (1951). Moreover, the Commission has refused to impose restrictions that create undesirable complications, unless it has been shown that they are overwhelmingly necessary in the public interest and consistent with practicable and efficient transportation regulations. See *Fox-Smythe Transp., supra*, at 9. The history of regulation of the motor carrier industry reveals that the Commission has, at times, looked favorably on the imposition of certain restrictions. However, the current state of the industry, as recognized by Congress in the Act, warrants re-examination of Commission policy concerning restrictions.

Facilities and Interlining Restrictions: These territorial restrictions are commonly found in grants of operating authority. Facilities restrictions have been, for the most part, included in a grant of authority where the exact locations of a particular plant is not otherwise identifiable, or to protect the interests of existing carriers where

[6] We are aware that not all States use counties as jurisdictional divisions, and therefore county-wide descriptions will not be appropriate in all cases. For example, Louisiana uses the parish as its local jurisdictional unit, and Virginia has many independent cities not included in a county. Additionally, we are aware that some cities encompass more than one county, e.g. New York, NY, is comprised of five separate counties. We would appreciate comments concerning similar situations that may require departure from the use of county-wide descriptions.

[7] See Congressional Record, vol. 126, No. 101–Part II, June 19, 1980, p. H5410, colloquy between Messrs. Schuster and Howard.

[8] 49 CFR 1041.11, Service to, from, and between points in each Alaska and Hawaii, interprets certificates and permits issued prior to admission of Alaska and Hawaii as States in 1959 and is not affected by this policy statement. Similarly, 49 CFR Part 1050, Motor Carrier Operations in the State of Hawaii, deals with an exemption for operations solely within the State of Hawaii, and is not affected by our actions here. The provisions of the Act encourage intermodal service, see 49 U.S.C. 10101(a)(7)(H), and we do not believe the revision of the statute will affect the provisions of 49 CFR Part 1091, Practices of For-Hire Motor Common Carriers of Property Participating in Alaskan Motor-Ocean Motor (AMOM) Substituted Service.

[9] Therefore, a contract carrier caption summary will read, "To transport XYZ commodities between points in the United States, under continuing contracts with (the ABC Co. of Anytown, USA)."

necessary and desirable. The restriction has been imposed in instances where the resulting scope of authority would exceed the limited proof of need for service shown by a single shipper, see *Kreider Truck Service, Inc., Extension—Lard Oils*, 82 M.C.C. 565 (1960), and therefore, to protect existing carriers from additional competition. See also *Fox-Smythe Transp., supra*, at 51.

"Originating at or destined to" restrictions have been imposed on a showing by protestants (or, frequently, on concession by applicant) that failure to impose such a restriction would materially and adversely affect the protestant. Moreover, restrictions against interlining and tacking have been imposed where these operations would result in additional competitive operations which would materially and adversely affect the operations of other authorized carriers. *Riss & Co., Inc., Ext.—Dakota County, Nebr.*, 102 M.C.C. 336, 343 (1966). These considerations have often outweighed the stated Commission preference not to encumber grants of authority and to encourage interlining and interchange between carriers. See *Tompkins Motor Lines, Inc., Extension—Louisville*, 95 M.C.C. 472, 481 (1964).

Congress has outlined specific considerations the Commission must take into account in framing operating authority. These include more productive use of equipment and energy resources, the promotion and maintenance and service to small communities, the promotion of intermodal service, the elimination of unreasonable or narrow territorial limitations, and the general policy that authority not be encumbered by restrictions. See 49 U.S.C. 10101(a)(7) and 10922(h). These considerations militate against the continued use of facilities and interlining restrictions.

The Commission has long held that a grant of operating authority may be based on support of one shipper, and that evidence presented by one shipper would be considered representative of the need for service in the community generally.[10] Consequently, the need for service may be adduced by one shipper, without limiting service to that one shipper. Therefore, when an applicant presents support for its operating proposal, one shipper's evidence can be considered sufficient to warrant a broad grant of authority.[11]

Tacking Restrictions:[12] The Commission proposes to continue the policy of prohibiting the tacking of irregular-route authority with a carrier's existing irregular-route certificates. Carriers are now allowed to tack irregular-route authority with existing irregular-route certificates only if notice of the intent to tack is published in the Federal Register and the evidence establishes a need for that type of service. We propose to prohibit carriers from requesting authority to tack irregular-route certificates under any circumstances, as the proper mechanism for providing service is to consolidate existing certificates and provide direct service without observing gateways. We believe this approach would be consistent with the mandate of 49 U.S.C. 10922(h)(1)(A), requiring the Commission to eliminate gateways and circuitous route limitations. This proposed approach would preclude the creation of any new gateways.

Equipment Restrictions: The imposition of equipment restrictions has been based on evidence adduced in an adjudication, but, more frequently, by consent of parties without an affirmative showing of any necessity for them. In both situations, the effect has been to protect existing carriers from additional competition. The Commission has long believed that restrictions are inherently undesirable and should not be imposed or retained except where it is shown conclusively that they are necessary in the public interest and consistent with effective transportation regulation. See *Fox-Smythe Transp., supra*, at 9.

Equipment restrictions involve a wide range of transportation services. Common equipment restrictions include mechanical refrigeration,[13] tank vehicles, hopper vehicles, dump vehicles, and van-type equipment.

Restrictions prevent carriers from rendering to the public a fully efficient and economical service. The Commission has long recognized that the use of equipment to its fullest capacity is economically sound, and has encouraged improvement of transportation methods. See *Removal of Truckload Lot Restrictions, supra*. The Commission has refused to impose restrictions for or against transportation involving certain types of equipment where the result would be to prevent rendition of a service with optimum efficiency. *Stearns Common Carrier Application*, 96 M.C.C. 627 (1964). The elimination of equipment restrictions from future grants of authority should enable carriers to provide shippers and the public with a more complete, economical, and efficient service.

Commodity Restrictions. Common among the commodity restrictions imposed by the Commission are restrictions against transportation in bulk, in bags, in containers, and mixed loads. These restrictions concern the transportation of types of commodities. The adoption of the STCC-type commodity codes for industry groupings would, in effect, preclude the use of these types of restrictions. Carriers would be required to use only broad commodity groupings. We propose to reject all motor carrier applications not using approved broad commodity descriptions.

Restrictive Amendments. In recent years, the tendency has developed among parties to operating rights proceedings to proposed restrictive amendments to eliminate a party's opposition to an application. These amendments have been closely scrutinized when it appears that they subordinate the public need for a particular service to the applicant's own interest, leaving a muddled picture of the authority sought and confusing support for the amended proposal. *Fox-Smythe Transp., supra*, at 21. The Commission has had the policy of rejecting restrictive amendments that unduly fragment authority, and thus prevent shippers and receivers from obtaining service they require. See *Sykes Transport Co. Common Carrier Application*, 83 M.C.C. 113 (1960).

The Motor Carrier Act emphasizes the principles of the *Sykes* case. Applicants should be required to seek broad authority, and not restrict the authority against providing service to certain points, or against transporting certain commodities. Restrictive amendments tend to fragment authority at all times, and not only when designed to eliminate opposition to an application. Therefore, in a separate proceeding, we propose not to accept restrictive amendments in the future. See Ex Parte No. 55 (Sub-No. 43), *Rules Governing Applications for Operating Authority*, published elsewhere in this issue.

---

[10] Compare *Shrader Common Carrier Application*, 71 M.C.C. 364 (1957), *Southern Exp. Inc., Common Carrier Application*, 62 M.C.C. 35 (1953), and *Stockberger Common Carrier Application*, 46 M.C.C. 599 (1946).

[11] A public need can be demonstrated by the supporting statement(s) of a shipper, of another person or persons, or of the applicant itself. See Report of the House Committee on Public Works and Transportation on H.R. 6418, as amended, June 3, 1980, p. 14; and *Congressional Record*, vol. 126, No. 102, June 20, 1980, pp. S7684–5, colloquy between Senators Packwood and Cannon.

[12] The subject of elimination of gateways and circuitous route limitations will be dealt with in a separate proceeding.

[13] The Commission is currently considering adoption of a rule which would delete from all existing certificates and permits restrictions limiting transportation service to that provided in "vehicles equipped with mechanical refrigeration." Ex Parte No. MC-139, *Removal of Mechanical Refrigeration Restrictions*, 45 FR 25419 (1980).

Fitness Related Applications

The Act provides six exceptions from the licensing provisions generally applicable to applicants for certificates and permits. An applicant for authority under one of these provisions of the act must show only that it is within the exception, and that it is fit to conduct the operations.

We propose that the descriptions used in the "fitness related applications" be treated separately and not use the description policy for certificates and permits previously discussed. The transportation services enumerated by Congress in 49 U.S.C. 10922(b)(4), 10923(b)(5)(A), and 10924(b) require only that the Commission find the applicants for such authority to be fit, willing, and able properly to perform the operations. Congress has described in the statute the type of service, and we would use the statutory language for the commodity descriptions.

(1) *Transportation to any community not regularly served by a motor carrier of property* (49 U.S.C. 10922(b)(4)(A)). An applicant for authority under this exception must show that the community it wishes to serve does not receive a particular type of service. An applicant must then indicate under which commodity grouping or groupings it wishes to perform the new service in its caption summary submitted with the application. The proper territorial designation for service *to that community* will be two-way radial authority between the involved community, on the one hand, and, on the other, points in the United States.

(2) *Transportation service as a direct substitute for complete abandonment for rail service* (49 U.S.C. 10922(b)(4)(B)). An applicant for authority under this exception must file its application within 120 days after the abandonment of rail service has been approved by the commission. The abandonment of railroad service to community must leave the community without any rail service. Rail service generally provides transportation of a vast range of commodities. Therefore, *general commodities* will be the appropriate commodity description. The appropriate territorial description would be between the point(s) of abandoned service on the railway on the one hand, and, on the other, points in the United States.

(3) *Transportation for the United States Government of certain commodities* (49 U.S.C. 10922(b)(4)(C). An applicant for authority under this exception would be able to apply to transport *general commodities* (except household goods as defined by the Commission, hazardous or secret materials, and sensitive weapons and munitions). The territorial scope of the authority under this section would be between points in the United States.

(4) *Transportation of shipments weighing 100 pounds or less if transported in a motor vehicle in which no one package exceeds 100 pounds* (49 U.S.C. 10922(b)(4)(D)[14] Applicants for this authority would be permitted to transport *shipments weighing 100 pounds or less.* The proper territorial authority for applications under this authority would be between points in the United States.

(5) *Motor Carrier brokers of property* (49 U.S.C. 10924(b)). Applicants for property broker authority would be permitted to arrange for the transportation of general commodities (except household goods),[15] between points in the United States.

(6) *Transportation by common carriage of food and other edible products (including edible byproducts but excluding alcoholic beverages and drugs) intended for human consumption, agricultural limestone and other soil conditioners, and agricultural fertilizers* (49 U.S.C. 10922(b)(4)(E). Transportation under this category must be provided by an owner-operator in his or her own vehicle (except in emergencies), and can only be provided to transport a total tonnage equal to the amount the owner-operator transports of exempt commodities under 49 U.S.C. 10526(a)(6). The certificate would be issued to read, "To transport *food and other edible products (including edible byproducts but excluding alcoholic beverages and drugs) intended for human consumption, agricultural limestone and other soil conditioners, and agricultural fertilizers,* by the owner of the motor vehicle in such vehicle, between points in the United States."

(7) *Transportation by contract carriage of food and other edible products (including edible byproducts but excluding alcoholic beverages and drugs) intended for human consumption, agricultural limestone and other soil conditioners, and agricultural fertilizers,* (49 U.S.C. 10923(6)(5)(A). A permit issued under this exception would enable an owner-operator to transport in his or her own vehicle (except in emergency situations) *"food and other edible products (including edible byproducts but excluding alcoholic beverages and drugs) intended for human consumption, agricultural limestone and other soil conditioners, and agricultural fertilizers* by the owner of the motor vehicle in such vehicle, between points in the United States, under a continuing contract or contracts with (XYZ Company of Anytown, USA)." No particular geographical area may be specified, see (49 U.S.C. 10923(d)(1). As in the case of common carriage, discussed above, at least 50 percent of the trasportation provided by the motor vehicle (measured by tonnage) must involve exempt commodities under 49 U.S.C. 10526(a)(6).

Environmental and Energy Considerations

We do not foresee that the proposed policy statement will significantly affect the quality of the human environment. The proposed policy statement is being issued consistent with the Motor Carrier Act of 1980, in which Congress has determined that the actions here proposed are in the interests of energy efficiency and conservation.

This notice of proposed policy statement is issued pursuant to 49 U.S.C. 1032, 10922, and 10923, and 5 U.S.C. 553.

Decided: June 26, 1980.

By the Commission, Chairman Gaskins, Vice Chairman Gresham, Commissioners Stafford, Clapp, Trantum, Alexis, and Gillian.

Agatha L. Mergenovich,

Secretary.

Revised STCC Major Industry Groupings

01 Non-exempt Farm Products
08 Forest Products
10 Metallic Ores
11 Coal
13 Crude Petroleum, Natural Gas or Gasoline
14 Nonmetallic Minerals; except Fuels
19 Ordnance or Accessories
20 Non-exempt Food or Kindred Products
21 Tobacco Products; except insectivides—see major Industry Group 28
22 Textile Mill Products
23 Apparel, or Other Finished Textile Products or Knit Apparel
24 Lumber or Wood Products; except Furniture—See Major Industry Group 25
25 Furniture or Fixtures
26 Pulp, Paper, or Allied Products
27 Printed Matter
28 Chemicals or Allied Products
29 Petroleum or Coal Products
30 Rubber or Miscellaneous Plastics Products
31 Leather or Leather Products
32 Clay, Concrete, Glass or Stone Products
33 Primary Metal Products; inc. galvanized; except coating or other allied processing—see Major Industry Group 34
34 Fabricated Metal Products; except Ordnance—see Major Industry Groups 19—Machinery, 35, or 37—Transportation Equipment

[14] Applicants under this exception are subject to the provision that notwithstanding any other provision of Title 49, any carrier holding authority under this subparagraph operating one or more commercial vehicles with a gross weight rating of 10,000 pounds of more shall be subject to Department of Transportation safety regulations for all of its fleet of vehicles.

[15] See 49 U.S.C. 10924(a).

35 Machinery and Supplies
37 Transportation Equipment
38 Instruments, Photographic Goods or Optical Goods, Watches or Clocks
40 Waste or Scrap Materials Not Identified by Industry Producing
42 Containers, Carriers, or Devices, Shipping, Returned Empty
49 Hazardous Materials
51 General Commodities (except household goods as defined by the Commission and classes A and B explosives)

[FR Doc. 80-19941 Filed 7-2-80; 8:45 am]
BILLING CODE 7035-01-M

federal register

Thursday
July 3, 1980

Part III

Securities and Exchange Commission

Regulatory Reform and Review; Listing of Certain Regulatory Matters and Related Information

SECURITIES AND EXCHANGE COMMISSION

17 CFR Ch. II

[Release Nos. 33-6219, 34-16943, 35-21644, IC-11237, and IA-725; File No. S7-841]

Listing of Certain Regulatory Matters and Related Information

AGENCY: Securities and Exchange Commission.

ACTION: Publication of listing of certain regulatory matters and related information.

SUMMARY: The Securities and Exchange Commission has determined to publish a listing of pending rulemaking and related regulatory matters which it is likely to consider during the balance of calendar year 1980. This release supersedes the listing which appears in Securities Act release No. 6117 (Aug. 31, 1979) (44 FR 52810, September 10, 1979). In addition, this release contains a more generic analysis of the staff's current regulatory reform and review initiatives, along with a discussion of certain areas in which the Commission is seeking to further particular statutory goals without resort to direct regulation. Further, the release also describes certain regulatory review projects which the Commission's staff may commence during 1981. With respect to these longer range initiatives, the Commission is seeking public comment on the staff's priorities.

DATE: Comments on Part III of this release must be received on or before October 1, 1980.

ADDRESSES: All communications on matters discussed in Part III of this release should be submitted in triplicate to George A. Fitzsimmons, Secretary, Securities and Exchange Commission, 500 North Capitol Street, Washington, D.C. 20549. Correspondence should refer to file number S7-841 and will be available for public inspection and copying at the Commission's Public Reference Room, 1100 L Street, NW., Washington, D.C.

Comments with respect to specific initiatives discussed in Parts I and II of this release should be submitted to the Commission in accordance with the terms of the particular Commission releases announcing or proposing those actions. In some cases, the comment periods with respect to these matters are closed. The Commission, in its discretion, may accept and include in the public file written comments received by the Commission after the closing date. *See* Rule 6(b) of the Commission's Informal and Other Procedures, 17 CFR 202.6(b).

FOR FURTHER INFORMATION CONTACT: Christine Delaney, Office of the Secretary, Securities and Exchange Commission, 500 North Capitol Street, Washington, D.C. 20549 (telephone 202/272-2600).

SUPPLEMENTARY INFORMATION: The Securities and Exchange Commission has traditionally been sensitive to the need to broaden public participation in the Commission's regulatory processes and to promote public understanding of the Commission's work. Consistent with that philosophy, during the past 18 months the Commission has published two listings of certain regulatory matters pending before the Commission. *See* Securities Act Release No. 6040 (Mar. 22, 1979) (44 FR 20354) and Securities Act Release No. 6117 (Aug. 31, 1979) (44 FR 52810). In furtherance of that policy, Part I of this release sets forth anticipated major rulemaking and related regulatory matters likely to be considered by the Commission during the balance of calendar year 1980

The Commission constantly seeks to identify opportunities to reform and restructure regulation, consistent with changes in the market-place and the business community. Public awareness of the Commission's goals and progress, and public participation in its regulatory reform activities, are essential to the success of those processes. In order to promote that participation, this release also includes certain additional information, not presented in the Commission's earlier listings of regulatory matters, concerning anticipated Commission regulatory priorities.

In this regard, Part II of this release contains a brief generic discussion of the Commission's regulatory reform and revision activities. This general description of initiatives is designed to promote public comprehension of the Commission's regulatory reform approach and direction. Part II also describes particular proposals of this nature which the Commission is likely to consider during the balance of 1980. As that listing demonstrates, the Commission continues to be aggressive in reviewing and reshaping its regulatory structure in response to the needs of the investing public. The final section of Part II also describes briefly some of the areas in which the Commission is seeking to discharge its statutory goals without resort to direct regulation.

Part III of this release sets forth certain regulatory reform and revision projects which the Commission's staff is contemplating initiating during 1981. With respect to these longer-range matters, the Commission invites public comment on its purposed staff priorities and also invites suggestions as to other initiatives which it should consider in addition or as alternatives. Part III also contains specific conceptual inquiries respecting certain major proposed reform projects.

The Commission's objective in requesting comments on the matters set forth in Part III is to increase its sensitivity to the facets of its regulation which merit reconsideration or review and to ensure that it has the benefit of the public's thinking at the formative stages of such projects with respect to the specific issues which should be considered.

I. Listing of Certain Regulatory Matters

This listing sets forth certain significant regulatory matters likely to come before the Commission during the balance of 1980. It is based upon Commission priorities at the time of publication. Because the Commission must respond to developments in the capital markets, changes in economic conditions, new Congressional priorities, and similar circumstances not easily predictable, no such listing can be definitive. Additionally, this listing does not include matters which, although under active consideration, have not yet evolved to a point in the deliberative process where public Commission action in certain.[1] Accordingly, while the Commission believes that the information contained herein will be of use to interested persons, those affected by Commission action should not rely solely on this document.

A. Significant Initiatives in the Areas of Capital Formation and Corporate Disclosure

1. *Proposed Revision of Form 10-K.* In its November 1977 report to the Commission, the Advisory Committee on Corporate Disclosure recommended revisions to the present annual report filed on Form 10-K. On August 16, 1978, the Commission issued a concept release requesting comment on the present Form 10-K and the revisions which the Advisory Committee had recommended. In January 1980, after reviewing the resulting comments and examining existing filings, the Commission proposed amendments to Form 10-K, Regulation S-K, Rule 14a-3, Rule 14c-3, and a number of related rules, forms, and guides under both the

[1] In contrast, Parts II and III of this release set forth various matters which are under staff consideration but which have not yet been presented to the Commission for approval.

Securities Act of 1933 and the Securities Exchange Act of 1934. This rulemaking seeks to facilitate the integration of filings under the Securities Act and the Exchange Act; facilitate the integration of Form 10-K and the annual report to shareholders; and eliminate disclosure which is duplicative or otherwise of little value to investors or analysts. The staff anticipates recommending further action to the Commission on the outstanding rule proposals in the third quarter of 1980. For further information, see Securities Exchange Act Releases Nos. 15068 (Aug. 16, 1978) and 16496 (Jan. 15, 1980) (43 FR 37460 and 45 FR 5972).

2. *Proposed Amendments to the Commission's Exhibit Requirements.* On November 16, 1979, the Commission published proposals in Securities Act Release No. 5149 which would standardize and improve the Commission's requirements relating to the filing of exhibits. The proposed amendments would delete certain exhibits formerly required to be filed, revise and make uniform the requirements relating to certain other exhibits, consolidate most exhibit requirements in a new Regulation S-K item, and require an exhibit index to be included with each filed form or report. The comment period on this proposal expired December 31, 1979, and the staff expects to complete its review of the comments and recommend final action to the Commission in the third quarter of 1980. For further information, see Securities Act Release No. 6149 (Nov. 16, 1979) (44 FR 67143).

3. *Publication for Comment of Existing Guides for Statistical Disclosure by Bank Holding Companies.* The Commission has requested comments on the quality and desirability of disclosure pursuant to Guides 61 and 3 which govern statistical disclosure by bank holding companies. This initiative fulfills the Commission's undertaking expressed at the time these guides were promulgated to review the experience of registrants and users to determine whether the new disclosures are necessary and appropriate. Staff proposals based on the comments will be submitted to the Commission in the third quarter of 1980. For further information, see Securities Act Release No. 6115 (Aug. 30, 1979) (44 FR 52820).

4. *Proposed Form S-15.* The Commission published proposed Form S-15 for comment on January 15, 1980. This form would provide an abbreviated vehicle for Securities Act registration of securities issued in certain corporate reorganizations and business combination transactions, if specified criteria were met. The public comment period closed on April 30, 1980, and the staff is analyzing the comments received and will prepare final proposals for Commission consideration in the third quarter of 1980. For further information, see Securities Act Release No. 6177 (Jan. 15, 1980) (45 FR 5934).

5. *Re-evaluation of the Guides.* As part of a long-term program to review all of its disclosure requirements, the Commission has published a concept release soliciting public comment on the "guides for Preparation and Filing of Registration Statements under the Securities Act of 1933" and the "Guides for Preparation and Filing of Reports and Proxy and Registration Statements under the Securities Exchange Act of 1934." The purpose of this re-evaluation is to monitor the effectiveness of the Guides and to identify those which have become obsolete or inconsistent with particular rules, regulations, or forms. The staff anticipates that the Commission will consider recommendations based on the comment process during the third quarter of 1980. For further information, see Securities Act Release No. 6163 (Dec. 5, 1979) (44 FR 72604).

6. *Management Remuneration.* On May 6, 1980, the Commission proposed for public comment amendments to Item 4 of Regulation S-K. These proposals involve the disclosure of management remuneration and specifically address pension, option, and stock appreciation rights plans, the definition of an executive officer, compensation relating to the termination of employment, indebtedness of management, and certain other technical amendments. The proposals are a result of the Commission's monitoring of the disclosure provisions adopted in Securities Act Release No. 6003 (Dec. 4, 1978) (43 FR 58151). The staff anticipates recommending further action to the Commission on these proposals following its review of the comments received. For further information, see Securities Act Release No. 6210 (May 6, 1980) (45 FR 31733).

7. *Proposed Amendments to Tender Offer Rules.* The Commission has proposed a series of amendments to the various rules governing tender offers. Among the chief features of these proposals are a definition of the term "tender offer"; certain antifraud provisions concerning trading by persons on the basis of material nonpublic information relating to a tender offer; provisions requiring equal treatment of security holders in the context of a tender offer; and a prohibition of certain purchases not made by means of a tender offer. The comment period expired on February 15, 1980, and the staff expects that recommendations will be considered by the Commission during the third quarter of 1980. For further information, see Securities Act Release No. 6159 (Nov. 29, 1979) (44 FR 70349).

8. *Corporate Governance.* In April 1977, the Commission announced a comprehensive study of the difficult issues relating to shareholder communications, shareholder participation in the corporate electoral process, and corporate governance generally. During 1977, the Commission conducted hearings in four cities concerning these basic issues. In 1978, as a result of this proceeding, the Commission adopted rules to expand the disclosures concerning board structure and director qualifications in proxy statements, and, in 1979, the Commission adopted rules revising the form of the proxy card in order to increase the opportunity for shareholders to participate in the corporate electoral and decision-making process.

The Commission anticipates that a staff report on corporate governance issues will be completed during 1980. Following publication of this report, the Commission will consider what further action, if any, is appropriate, based on the recommendations in that report. For further information, see Securities Exchange Act Releases Nos. 16356 (Nov. 21, 1979), 15384 (Dec. 6, 1978), 13482 (Apr. 28, 1977), and 13901 (Aug. 29, 1977) (44 FR 68764, 43 FR 58522, 42 FR 23901, and 44860).

9. *Classification of Issuers.* On June 2, 1980, the Commission published a release which solicits comments on the feasibility of establishing defined classes of small issuers for purposes of modifying certain reporting and other obligations under the Securities Exchange Act. The Commission also released statistical data with respect to those companies that are subject to the Securities Exchange Act pursuant to Sections 12 and 15(d) thereof, for the purpose of evaluating potential classification criteria. Based on the public comments, the staff will consider whether to recommend that the Commission propose reduced or streamlined disclosure obligations either with respect to the frequency of reports or the type of information reported, or both, for one or two additional classes of issuers.

The comment period on this concept release closes on September 15, 1980, and the staff anticipates presenting recommendations to the Commission concerning these matters before the end

of 1980. For further information, see Securities Exchange Act Release No. 16866 (June 2, 1980) (45 FR 40145).

B. Significant Initiatives Affecting Regulation of the Securities Markets and the Securities Industry

1. *National Market System.* The Securities Act Amendments of 1975 directed the Commission to facilitate the establishment of a national market system for securities. As part of its implementation of that mandate, the staff anticipates presenting recommendations to the Commission concerning a number of initiatives during the third and fourth quarters of 1980. In particular, the Commission may consider whether to adopt, withdraw, or republish for comment pending rule proposals in four major areas:

(1) A proposal to require nationwide price protection for displayed public limit orders for certain securities. For further information, see Securities Exchange Act Release No. 15770 (Apr. 26, 1979) (44 FR 26692).

(2) Proposals to establish procedures by which securities or classes of securities would be designated as qualified for trading in a national market system. For further information, see Securities Exchange Act Release No. 15926 (June 15, 1979) (44 FR 36912).

(3) Proposed procedures and requirements for plans governing the development, operation, or regulation of a national market system or the facilities thereof. For further information, see Securities Exchange Act Release No. 16410 (Dec. 7, 1979) (44 FR 72607).

For a general discussion of the Commission's national market system initiatives, see Securities Exchange Act Release Nos. 14416 (Jan. 26, 1978) and 15671 (Mar. 22, 1979) (43 FR 4354 and 44 FR 20360).

2. *Options Study Recommendations.* During 1980, the Commission will consider whether, in response to the recommendations of the Commission's Special Study of the Options Markets, to propose rules (1) to require self-regulatory organizations to establish a central investor complaint file; (2) to require the disclosure on customer account statements of information on commission charges; and (3) to establish minimum training requirements for registered representatives who recommend options transactions to customers. For further information, see Securities Exchange Act Release No. 16701 (Mar. 26, 1980) (45 FR 21426).

3. *Underwriting Practices.* In 1978, the National Association of Securities Dealers, Inc., filed a proposed rule change governing the payment and receipt of selling concessions, discounts, and other allowances in connection with fixed price securities offerings. The initial impetus for the proposed rule change was the federal district court decision in *Papilsky* v. *Berndt* [1976–77 Transfer Binder] Fed. Sec. L. Rep. (CCH) ¶95,627 (S.D.N.Y., 1976). The public hearings on issues raised by the proposed rule change were concluded on November 30, 1979. The staff is presently analyzing the record of this proceeding, and the Commission has announced that it will consider what further action to take concerning the NASD's rule proposal at an open meeting on July 3, 1980. For further information, see Securities Exchange Act Release No. 15807 (May 9, 1979) (44 FR 28574).

4. *Rules 10b–10 and 15c2–12.* The Commission has proposed amendments to Rules 10b–10 and 15c2–12 under the Securities Exchange Act which would require brokers, dealers, and municipal securities dealers to disclose on customer confirmations the amount of remuneration received in certain transactions in debt securities. The staff is reviewing the public comments received and anticipates presenting its recommendations to the Commission during the third or fourth quarters of 1980. For further information, see Securities Exchange Act Release Nos. 15219 and 15220 (Oct. 6, 1978) (43 FR 47495 and 47333).

5. *Proposed Rule 13e–2.* In 1970 and 1973, the Commission published for comment proposed Rule 13e–2 which would impose restrictions on an issuer's repurchases of its own securities. During the third quarter of 1980, the staff anticipates presenting recommendations to the Commission concerning whether to adopt or withdraw proposed Rule 13e–2 or publish for comment a revised version. For further information, see Securities Exchange Act Release No. 10539 (Dec. 6, 1973) (38 FR 34341).

6. *Proposed Rule 15b7–1.* In 1977, the Commission published proposed Rule 15b7–1 under the Securities Exchange Act which would establish minimum qualification requirements for brokers and dealers and their associated persons. During the fourth quarter of 1980, the staff may recommend to the Commission that it consider whether to adopt or withdraw proposed Rule 15b7–1 or publish for comment a revised version. For further information, see Securities Exchange Act Release No. 13679 (June 27, 1977) (43 FR 34328).

7. *Rule 19b–4.* In 1979, the Commission published proposed amendments to Rule 19b–4 under the Securities Exchange Act. That rule specifies the procedures that self-regulatory organizations must follow in filing proposed rule changes with the Commission. The proposed amendments are intended to enhance the efficiency of the Commission's oversight of self-regulatory organizations. During the third quarter of 1980, the staff anticipates recommending that the Commission consider whether to adopt these amendments. For further information, see Securities Exchange Act Release No. 15838 (May 18, 1979) (44 FR 30924).

C. Significant Initiatives Affecting Investment Companies and Investment Advisers

1. *Status of Certain Issuers.* The Commission has proposed three Investment Company Act rules—Rules 3a–1, 3a–2, 3a–3—and an amendment to existing Rule 3c–2—all relating to whether certain issuers which have the characteristics of investment companies will be regulated under the Investment Company Act of 1940. The comment periods closed January 8, 1980. The staff anticipates that the Commission will consider these proposals further during 1980 upon completion of the staff review of the public comments. On June 3, 1980, the Commission transmitted to Congress a legislative proposal relating to business development companies, one part of which, if adopted, would make the proposed amendment to Rule 3c–2 unnecessary. For further information, see Investment Company Act Release Nos. 10937 (Nov. 15, 1979), 10938 (Nov. 13, 1979), 10943 (Nov. 16, 1979), and 10944 (Nov. 16, 1979) (44 FR 66608, 66612, 67152, and 67150).

2. *Proposed Amendments to Rule 17j–1.* At an open meeting on September 2, 1979, the Commission adopted Rule 17j–1 under the Investment Company Act requiring investment companies and their investment advisers and principal underwriters to develop codes of ethics governing purchases or sales by investment company insiders of the same securities held or to be acquired by the investment company. However, the Commission has not published the rule as adopted because it wished to consider whether to propose simultaneously certain amendments to the rule which would give guidance to those entities required to adopt codes of ethics as to some of the activities which would constitute fraudulent, deceptive, or manipulative acts, practices or courses of business. During the third or fourth quarters of 1980, the Commission anticipates considering whether to publish notice of the adoption of the rule and propose such amendments. For further information, see Investment Company Act Release Nos. 10162 (Mar.

20, 1978) and 10222 (Apr. 28, 1978) (43 FR 19669 and 12721).

3. *Revision of Procedures for Processing Post-Effective Amendments.* The Commission has proposed for comment a rule under the Securities Act, and related amendments to registration statement forms, which would cause most post-effective amendments to registration statements filed by investment companies to become effective automatically, without affirmative action by the Commission or its staff. Post-effective amendments would become effective either immediately upon filing or 60 days thereafter, depending upon their nature. The staff anticipates completing its review of the public comments and recommending further action to the Commission during 1980. For further information, see Securities Act Release No. 6205 (Apr. 3, 1980) (45 FR 24500).

4. *Disclosure of Money Market Fund Yields.* The Commission has published for comment a proposed amendment to the registration statement form for open-end management investment companies to require the inclusion in the prospectuses of money market funds of a yield figure computed according to a standardized method. The Commission also proposed an amendment to Rule 434d under the Securities Act, relating to advertisements by investment companies in the form of an "omitting prospectus," which would require money market funds to compute any yield quotations used in Rule 434d advertisements according to that standardized method. The staff anticipates completing its review of the public comments and recommending further action to the Commission during 1980. For further information, see Securities Act Release No. 6183 (Jan. 28, 1980) (45 FR 7578).

5. *Mutual Fund Distribution Expenses.* The Commission has proposed two rules under the Investment Company Act relating to the bearing of distribution expenses by mutual funds. The first, Rule 12b-1, would permit mutual funds to finance the distribution of its shares if certain conditions were met; the second, Rule 17d-3, would provide a limited exemption from the requirement of prior Commission approval for certain transactions involving affiliated persons, if the transactions complied with Rule 12b-1. The Commission also proposed related form amendments regarding disclosure of distribution expenses. Further Commission action on this matter is anticipated in the third quarter of 1980. For further information, see Investment Company Act Release No. 10862 (Sept. 7, 1979) (44 FR 54014).

D. Significant Accounting Related Initiatives

1. *General Revision of Regulation S-X.* In January 1980, the Commission proposed certain amendments to Regulation S-X, which governs the form and content of financial statements filed with the Commission. These proposals were responsive to the recommendation of the Commission's Advisory Committee on Corporate Disclosure that a continuing goal of the Commission should be the elimination of rules of general applicability which cause differences between financial statements prepared in accordance with Regulation S-X and those prepared in accordance with generally accepted accounting principles. The staff is reviewing the public comments received on this proposal and anticipates recommending that the Commission consider further action during the third quarter of 1980. For further information, see Securities Act Releases No. 6178 (Jan. 15, 1980) and No. 6204 (Apr. 2, 1980) (45 FR 5943 and 24499).

2. *Form and Content of Financial Statements.* Simultaneously with the publication of the foregoing item, the Commission proposed amendments to Regulation S-X intended to establish uniform instructions governing the periods to be covered in financial statements included in annual reports to shareholders and in most filings with the Commission under the Securities Act of 1933 and the Securities Exchange Act of 1934. The staff is now reviewing the public comments and anticipates recommending that the Commission consider further action with respect to the proposals during the third quarter of 1980. For further information, see Securities Act Release No. 6179 (Jan. 15, 1980) (45 FR 5963).

3. *Accountants' Liability for Reports on Certain Unaudited Information Under the Securities Act of 1933.* In December 1979, the Commission adopted rules which provide that a "report" prepared or certified by an accountant within the meaning of Sections 7 and 11 of the Securities Act of 1933 shall not include a review of unaudited interim financial information. In April 1980, the Commission proposed similar amendments which would exclude (1) reports on unaudited supplementary information concerning the effects of changing prices, and (2) reports on unaudited oil and gas reserve information from the ambit of Sections 7 and 11. The purpose of these proposals is to encourage the expansion of auditors' responsibilities to include limited assurances concerning matters for which a full audit has not been undertaken. Following staff review of the public comments received, which is anticipated to be completed in the third quarter of 1980, the Commission will determine what further action to take on these proposals.

In this connection, the Commission's release publishing these proposals also stated that, in the near future, the Commission intends to request comments also on whether it should develop a general rule which addresses the issue of accountants' liability with respect to any reports issued by accountants, after conducting reviews less extensive than an audit. The Commission expects to consider whether such a general approach to the liability issue should be formulated during the second half of 1980. For further information, see Securities Act Release No. 6208, (Apr. 30, 1980) (45 FR 29849).

4. *Ratio of Earnings to Fixed Charges.* The Commission has issued a concept release requesting comments on the usefulness of the requirement that registrants present a ratio of earnings to fixed charges in filing with the Commission. The staff will review comments and recommend further Commission action during the third quarter of 1980. For further information, see Securities Act Releases No. 6196 (Mar. 7, 1980) and No. 6211 (May 9, 1980) (45 FR 16498 and 33650).

5. *Report on the Accounting Profession.* In 1977, the Commission indicated to Congress that the Commission would report periodically on the response of the accounting profession to the challenges which Congress and others had placed before it and on the Commission's own initiatives concerning the profession. The Commission submitted such reports to Congress in 1978 and 1979, and intends to submit a further report by the end of July, 1980.

E. Miscellaneous

1. *Confidential Treatment Requests.* On December 28, 1979, the Commission issued a proposed rule setting forth procedures to be followed by persons seeking confidential treatment of material submitted to the Commission. The staff is studying the public comments and expects to make recommendations to the Commission in the near future. For further information, see Securities Act Release No. 6172 (Dec. 28, 1979) (45 FR 1627).

II. Regulatory Review and Reform Initiatives

A. General Policy

In addition to the regulatory initiatives described above, the Commission is engaged in several significant efforts directed at the revision, simplification, and reform of various categories of its rules under the federal securities laws. In general, each of these efforts reflects one or more of three themes. First, the Commission seeks to review its rules continuously with a view toward maximizing investor protection while minimizing the costs and complexity of compliance and the level of federal intervention in business activity. Examples of this type of review include the Commission's proposals concerning the integration of disclosure requirements under the Securities Act and the Securities Exchage Act and the Commission's ongoing studies under the Investment Company Act and Investment Advisers Act. *See* Items 1, 4, and 5 of Part IIB, *infra.*

Second, as a result of the impetus provided by the work of the Advisory Committee on Corporate Disclosure,[2] the Commission has initiated systematic measures to review all disclosure-related rules, forms, and guides on a regular basis. The Commission's objective is to eliminate out-of-date requirements, remove inconsistencies, and, in general, to adjust its disclosure requirements to the ever-changing economic and business environment. A current example of this facet of the Commission's regulatory review program is the review of the guides for filing registration statements and reports. *See generally* Items 2 and 6 of Part IIB, *infra.*

Third, the Commission has been particularly attentive to the effect of its requirements on small business and has taken a number of steps to reduce burdens on such entities consistent with investor protection. For example, in Securities Act Release No. 6049 (Apr. 3, 1979) (44 FR 21562), the Commission adopted Form S-18, a simplified registration form available to certain issuers not subject to the Commission's continous reporting requirements. Form S-18 may be utilized for the registration of up to $5 million of securities. Similarly, in Securities Act Release No. 6180 (Jan. 10, 1980) (45 FR 6362), the Commission adopted Securities Act Rule 242, 17 CFR 230.242, which allows certain issuers to sell up to $2 million of securities in any six-month period to an unlimited number of "accredited persons," including specified institutions, purchasers of $100,000 or more, and executive officers and directors of the issuer, as well as to 35 other purchasers. Further current Commission initiatives of this nature are listed in Item 3 of Part IIB, *infra.*

In addition to these three areas, another important facet of the Commission's efforts to review existing regulatory requirements is monitoring of the operation and consequences of rules after they are adopted. In this connection, the Commission has instituted a number of monitoring programs with the goal of assessing, on an empirical basis, the impact of particular regulations on issuers, securities markets, and securities markets participants. The objective of such a program is to provide the Commission with the empirical predicate for the continuing examination of its regulatory framework. These programs utilize existing Commission data, as well as field research and surveys, in conjunction with established economic and statistical methodologies. In addition, the Commission's Directorate of Economic and Policy Analysis is seeking to develop new analytic techniques to assess the impact of regulatory actions.

The Commission's sensitivity to the importance of monitoring has already generated several examples of the scope and impact of studies of this nature. First, the Commission recently released a monitoring report on Form S-18, a shortened registration form utilized by first-time securities issuers.[3] That report examined the use of Form S-18 during 1979, with particular emphasis on the characteristics of issuers utilizing the form, as well as the result cost savings. In addition, the Commission has prepared a study of the market impact of securities sales pursuant to Rule 144, a regulation governing the distribution of certain securities, as a prelude to consideration of further liberalization of that rule.[4] Further, concurrently with the adoption of new Rule 242, an exemptive provision designed to facilitate sales of securities by certain issuers, the Commission announced that it will closely monitor the operation of the rule in order to assess its continuing impact.[5] Finally, the Commission has initiated a monitoring program which will assist it in studying the consequences of Commission Rule 19c-3 which precludes national securities exchanges from limiting off-board trading by their members in certain listed securities.[6] The Commission intends to remain alert for opportunities to implement monitoring programs in conjunction with new rules as they are adopted.

The Commission believes that ongoing review, evaluation, and monitoring of regulatory requirements are essential components of its responsibilities in administering the federal securities laws. These processes benefit from public commentary, and the Commission encourages all interested segments of the public and business community to submit comments on these programs in accordance with the terms of the various releases announcing these projects.

B. Specific Initiatives

Listed below are the major efforts in which the staff is currently engaged to review existing Commission regulations. In those instances where the Commission has issued a formal statement concerning the matter, the relevant release is cited. In some cases, however, the staff has not yet developed the specific initiatives discussed to the point of formal Commission consideration. In these instances, while the staff anticipates Commission action consideration during 1980, the matters involved may, of course, be substantially revised or rejected by the Commission.

1. *Integration and Improvement of Registration and Reporting Requirements.* In response to the recommendations of the Disclosure Advisory Committee, the Commission is engaged in a project to integrate the registration and reporting requirements under the Securities Act of 1933 and the Securities Exchange Act of 1934. The Commission believes that integration of these disclosure requirements will benefit registrants by reducing duplicative reporting and will produce a more coherent reporting structure.

In this connection, the Commission has focused principally on improving and simplifying the registration and reporting processes. Initiatives to date have resulted in four separate proposals.

a. *Integration of Form 10-K and the Annual Report to Shareholders.* The Commission has published a proposal directed toward developing the fundamental blueprint for a system of integration using the annual report to shareholders as the key disclosure document. *See* Securities Act Release

[2] *Report of the Advisory Committee on Corporate Disclosure to the SEC,* Committee Print No. 95-29, 95th Cong., 1st Sess. (1977).

[3] Securities and Exchange Commission, *Form S-18: A Monitoring Report on Its Use in 1979* (March, 1980).

[4] Securities and Exchange Commission, *Rule 144 Sales in the OTC Market* (January, 1980).

[5] Securities Act Release No. 62180 (Jan. 10, 1980) (45 FR 6362).

[6] Securities Exchange Act Release No. 16888 (June 11, 1980) (45 FR 41125).

No. 6176 (Jan. 15, 1980) (45 FR 5974). This initiative is described in more detail in Item 1 of Part IA, *supra*.

b. *Form and Content of Financial Statements.* The Commission is re-evaluating requirements for financial statements focusing on issues such as the periods covered, the entities separately reported upon, and the requirement that pro forma financial statements be presented. *See* Securities Act Release No. 6179 (Jan. 15, 1980) (45 FR 5963). This initiative is described in part in Item 2 of Part ID, *supra*.

c. *Review of Regulation S-X.* The Commission has solicited comment on those requirements in its rules which are unnecessary or duplicative in light of generally accepted accounting principles. *See* Securities Act Release No. 6178 (Jan. 15, 1980) (45 FR 5943). This initiative is described in more detail in Item 1 of Part ID, *supra*.

d. *Proposed Form S-15.* The Commission has proposed a short form for registration of securities issued in certain merger and reorganization transactions. *See* Securities Act Release No. 6177 (Jan. 15, 1980) (45 FR 5934). This initiative is described in more detail under Item 4 of Part IA, *supra*.

2. *Review of Disclosure Requirements.* As described in Item 5 of Part IA, the Commission has commenced a review of all its disclosure requirements under the Securities Act of 1933 and the Securities Exchange Act of 1934. As part of this process, in Securities Act Release No. 6163 (Dec. 5, 1979) (44 FR 72604), the Commission solicited comments on the various Guides which have been issued under both Acts.

3. *Small Issuer Capital Formation.* The Commission has for some time been examining steps that might be taken to facilitate small business capital formation and to reduce undue regulatory burdens on smaller registrants arising from administration of the federal securities laws. *See* Securities Act Release No. 5914 (Mar. 15, 1978) (43 FR 10876). While the Commission's primary responsibility is to protect investors and the integrity of the securities markets, compliance with Commission regulations should not operate unnecessarily to impair capital formation or to impose undue obligations on smaller issuers or broker-dealers. Accordingly, the Commission's staff is considering several new initiatives designed to accommodate the needs of small business in a manner consistent with its statutory responsibilities.

a. *Regulation A.* Regulation A, 17 CFR 230.251–264, contains an exemption from the full registration requirements of the Securities Act of 1933 for certain small offerings of securities.[7] The Office of Small Business Policy is preparing proposals which would amend Regulation A to update and consolidate the disclosure which Form 1-A and Schedule I require. In addition, the Commission has proposed amendments to Rule 252 of Regulation A. Rule 252 disqualifies certain issuers from utilizing Regulation A unless the Commission finds good cause to grant relief. The Commission's proposals would cause disqualifications to lapse automatically after a specified period of time or upon satisfaction of certain objective criteria. For further information, see Securities Act Release No. 6214 (June 19, 1980) (45 FR 42642).

b. *Rule 240.* The Office of Small Business Policy is also considering whether to recommend that the Commission propose amendments to Rule 240, 17 CFR 230.240, which exempts certain limited offers and sales by closely held issuers. The staff is examining the merits of increasing the $100,000 ceiling on the aggregate price of securities which may be offered pursuant to Rule 240 and excluding from that figure the dollar amount of sales of equity securities to defined institutional investors. In addition, the staff is considering whether to eliminate the present requirement that the amount of securities which may be offered pursuant to Regulation A be reduced by the amount of securities offered during the previous year under Rule 240.

c. *Wrap-Around Offering Circular.* The Office of Small Business Policy currently is considering development of a "wrap-around" offering circular for Regulation A offerings by companies which have been subject for at least two years to the continuous reporting requirements of the Securities Exchange Act. The contemplated offering circular would be annexed to certain periodic reports which a registration statement on Form S-16 incorporates by reference.

d. *Rule 146.* The Office of Small Business Policy is considering amendments to Rule 146, 17 CFR 230.146, the Commission's safe harbor rule for private offerings,[8] which would more closely conform that provision to Rule 242, *supra*, which exempts certain limited offerings from the registration requirements of the Securities Act of 1933. Among the questions under review are whether to add to Rule 146(e) an express materiality standard with respect to the information which must be received by, or be accessible to, each offeree or his representative. The staff also is considering whether to exclude defined institutional investors from the 35-purchaser limitation in Rule 146 and whether to expand the permissible means of payment under Rule 146(g).

e. *Rule 147.* The Office of Small Business is considering the feasibility of amending Rule 147, 17 CFR 230.147, the Commission's safe harbor rule for intrastate offerings, to address problems raised by commentators at the Commission's small business hearings in 1978. To be eligible to use Rule 147, an issuer must be doing business within the state or territory in which its securities will be offered and sold. This "doing business" test requires not only that the issuer's principal office be located in the state in question, but also that 80 percent of the issuer's gross revenues have been derived in-state, 80 percent of its assets be located in-state, and 80 percent of the net proceeds of the offering be applied in-state. The staff will consider whether to relax these standards. Alternatively, the staff will consider whether to replace or augment Rule 147 with a new limited offering exemption under Subsection 3(b) of the Securities Act of 1933 for securities offerings within defined multi-state geographic regions by issuers resident and doing business therein.

f. *Compliance Cost Study.* The Office of Small Business Policy, in conjunction with the Directorate of Economic and Policy Analysis, is studying the feasibility of conducting a voluntary survey of issuers to determine the cost of complying with the continuous reporting provisions of the Securities Exchange Act of 1934. In 1977, the Advisory Committee on Corporate Disclosure conducted a very limited study of this nature. The information obtained through any new cost survey

[7] In Securities Act Release No. 5977 (Sept. 11, 1978) (43 FR 41383), the Commission adopted an amendment to Regulation A to increase the aggregate offering price of securities which may be sold thereunder during a 12-month period from $500,000 to $1,500,000. This amendment followed Congressional action amending Section 3(b) of the Securities Act to raise the ceiling on the Commission's authority to create a small offering exemption.

[8] In Securities Act Release No. 5975 (Sept. 8, 1978) (43 FR 41193), the Commission adopted an amendment to Rule 146 which modifies the disclosure requirements applicable to an offering which does not exceed $1,500,000 to allow disclosure of the information prescribed by Schedule I of Regulation A. Similarly, in Securities Act Release No. 5979 (Sept. 19, 1978) (43 FR 43709), the Commission amended Rule 144, 17 CFR 230.144, which sets forth guidelines for the resale of certain securities acquired in a private placement, to relax certain limitations on the manner of sale and of the amount of securities that can be sold under the rule. Securities Act Release NO. 6032 (Mar. 5, 1979) (44 FR 15610) further amended Rule 144 to permit certain noncaffiliates to disregard the volume limitation provisions of Rule 144 after a defined holding period.

would augment existing data on which a proposed classification of issuers (Item g, *infra*) for purposes of flexible reporting requirements might be based.

g. *Classification of Issuers.* In Securities Exchange Act Release No. 16866 (June 2, 1980) (56 FR 40145), the Commission invited public comments on the concept of classifying issuers by size and adjusting periodic disclosure requirements with respect to certain smaller categories of issuers. Depending on the comments received, the staff anticipates formulating recommendations in this area before the end of 1980. This initiative is discussed in more detail in Item 9 of Part IA, *supra*.

4. *Investment Company Act Study.* In 1978, the Commission established the Investment Company Act Study Group. The mandate of this group is to recommend to the Commission ways of resolving problems that have arisen during the four decades of Commission experience in regulating the investment company industry under the Investment Company Act of 1940. Accordingly, the group is reviewing the current state of Investment Company Act administration with the goal of developing a simpler, more efficient regulatory system that enhances the oversight responsibilities of investment company directors and minimize direct Commission involvement.

As a result of this study, the Commission has proposed or adopted approximately 25 rules and amendments to rules regarding such matters as transactions with affiliated persons, investment advisory contracts, mergers and acquisitions, and routinely-granted applications. During the balance of 1980, the staff anticipates recommending that the Commission consider additional rules regarding:

a. *Subsection 22(d).* The staff is examining Subsection 22(d) of the Investment Company Act and the rules thereunder, which mandate the price at which redeemable investment securities are sold, to determine whether to recommend that the Commission propose new or amended rules or issue an interpretive release modifying the manner of compliance therewith.

b. *Valuation of Certain Debt Securities.* The staff is condidering recommending that the Commission issue an interpretive release reflecting concerns about valuation procedures for certain debt securities and stating the Commission's position about proper valuation practices.

c. *Mini-accounts.* The staff is considering whether to recommend that the Commission propose a rule defining mini-account services or otherwise clarifying the status under the Investment Company Act of various investment advisory programs.

d. *Service Contracts.* The staff is considering whether to recommend that the Commission propose a rule permitting, under conditions designed for the protection of investors, affiliated persons of investment companies to privide administrative and other services to such companies.

e. *Money Market Fund Reporting Requirements.* The staff is considering whether to recommend that the Commission propose a rule requiring money market funds to file reports with the staff concerning the performance of various administrative operations.

f. *Processing of Post-Effective Amendments.* The Commission has proposed for comment a rule under the Securities Act, and related amendments to registration statement forms, which would cause most post-effective amendments to registration statements filed by investment companies to become effective automatically, without affirmative action by the Commission or its staff. This proposal is described in more detail in Item 3 of Part IC, *supra*.

5. *Investment Adviser Regulation.* For some time, the Commission has been aware of a need to reevaluate its Investment Advisers Act of 1940 regulatory program in light of the increasing volume of services provided by investment advisers. In December of 1978, the Commission established within its Division of Investment Management a new Office of Investment Adviser Regulation. This Office is conducting a comprehensive study to determine what, if any, changes should be made in its regulatory program with respect to investment advisers. For further information, see Investment Advisers Act Release No. 717 (Apr. 4, 1980) (45 FR 25080).

6. *Investment Company Disclosure Requirements.* Consistent with its policy of systematically reviewing all disclosure requirements, the Commission has established a study group in the Division of Investment Management to undertake a thorough review of the disclosure requirements imposed on investment companies by the Securities Act of 1933 and Investment Company Act of 1940. The disclosure study is exploring ways to reduce duplicative and unnecessary burdens on both the investment company industry and the Commission staff which result from present disclosure requirements.

7. *Broker-Dealer Financial Responsibility Requirements.* The Commission's staff is presently considering a broadly focused re-examination of the Commission's financial responsibility rules applicable to securities broker-dealers—Securities Exchange Act Rule 15c3-1, the net capital rule, and Rule 15c3-3, 17 CFR 240.15c3-1 and 240.15c3-3. The staff anticipates recommending that the Commission publish a concept release on this issue during the third quarter of 1980. In this connection, the staff also has under consideration certain recommendations from the Securities Industry Association for changes in the net capital requirements.

8. *Broker-Dealer Financial and Operational Reporting.* During the third quarter 1980, the Commission's staff will address the need to proposed amendments to Rule 17a-5 under the Securities Exchange Act, 17 CFR 240.17a-5, the financial and operational reporting requirements for brokers and dealers collectively known as the FOCUS reporting system. Any such amendments would be designed to revise the FOCUS reporting system to reflect changed conditions in the industry and to eliminate unwarranted reporting requirements.

9. *Broker-Dealer Third Market Volume Reporting.* The staff is considering whether to recommend that the Commission terminate the requirement, currently imposed pursuant to Securities Exchange Act Rule 17a-9, 17 CFR 240.17a-9, that broker-dealers periodically report their third market trading volume. Comparable information presently is retrievable from the NASDAQ reporting system maintained by the National Association of Securities Dealers and, in conjunction with the redesign of the FOCUS reporting system described in Item 8, *supra*, the staff will explore the possibility of eliminating this reporting obligation.

10. *Public Utility Holding Act Exemptive Relief.* The staff is considering recommending that the Commission publish for comment rules which would exempt certain electric utility company acquisitions of interests in generating companies from the application requirements of Section 10 of the Public Utility Holding Company Act. Rules of this nature would provide a basis for exempting the parent electric company from the definition of a holding company under Section 3(a) of the Act. Similarly, the staff is also considering recommending that the Commission publish for comment a rule which would exempt certain less than 50 percent owned subsidiaries of registered holding companies from the duties, obligations, and liabilities imposed on subsidiaries under the Act.

C. Nonregulatory Initiatives

In enacting the federal securities laws, Congress chose to place an important measure of its reliance on disclosure and self-regulation—rather than direct Commission regulation—as the means to accomplish the goals on which the securities laws are premised. In that vein, the Commission has traditionally sought to avoid the application of regulatory requirements where less formal alternatives can suffice. The Commission currently has underway, or is considering, a number of initiatives to reduce, or avoid the imposition of, regulatory burdens through the use of flexible and cost-effective methods which will not entail direct regulations of the private sector. Where it is appropriate, this type of approach can provide for the necessary protection of public investors while diminishing the costs of regulatory compliance and the degree of governmental intrusion into private decision-making.

The application of this philosophy may involve such measures as requiring the disclosure of information which, in addition to providing a better basis for investment and corporate suffrage decision-making, will also allow the discipline of the marketplace to encourage changes in behavorial norms; enhancing the role and responsibility of corporate directors as a substitute for specific regulatory standard-setting; and encouraging voluntary private sector self-regulation. The lines between areas in which the public interest demands that the Commission act in a formal regulatory mode, those in which the Commission can rely on the more flexible approach described above, and those in which the Commission chooses to refrain from any involvement are not always easy to draw. Nonetheless, in certain circumstances "nonregulatory" Commission facilitation of private sector initiatives may obviate the need for direct regulation or additional legislation.

The Commission has adopted, or may consider employing, these nontraditional regulatory methods in the following contexts:

1. *The Investment Company Act Study.* The study has adopted rules which seek to shift responsibility for some categories of investment company decision-making onto investment company directors and away from the application and regulatory approval mode. Examples of this approach include new Commission rules which allow directors to establish, and monitor compliance with, voluntary standards and procedures which are designed to provide for the fair treatment of the investment company in certain transactions. The study is described in more detail in Item 4 of Part IIB, *supra*, and Item 7 of Part IIIB, *infra*.

2. *Self-Regulation of Investment Advisers.* At present, all facets of investment adviser regulation are administered directly by the Commission. The staff is presently considering the feasibility of a self-regulatory system applicable to investment advisers. The Investment Advisers Act study is described in Item 5 of Part IIB, *supra*, and Item 8 of Part IIIB, *infra*.

3. *Self-Regulation of Accountants.* The Commission has traditionally permitted the accounting profession to take the lead; subject to Commission oversight, in establishing appropriate accounting principles and auditing standards. More recently, the Commission has similarly supported the establishment of a voluntary self-regulatory organization for accountants to satisfy the public's expectation of professional quality control. These matters have been discussed in detail in the Commission's annual reports on the accounting profession as described in Item 5 of Part ID, *supra*.

4. *Corporate Accountability.* The form and effectiveness of the mechanisms of corporate accountability are intertwined with the level of public trust and confidence in the securities markets. For this reason, the Commission as an entity, and its individual members, have traditionally played an important role in encouraging voluntary private sector initiatives to enhance accountability. Similarly, the Commission has not been hesitant to use its disclosure authority and its authority over the proxy solicitation process to ensure that investors are fully informed concerning material information bearing on issuer accountability and to promote fair corporate suffrage. As discussed in more detail in Item 8 of Part IA, the Commission's staff is currently preparing a comprehensive report on these issues.

5. *National Market System.* Section 11A(a)(2) of the Securities Exchange Act of 1934, as amended in 1975, directs the Commission to use its authority "to facilitate establishment of a national market system for securities * * *." While the discharge of this mandate has necessarily demanded formal Commission regulatory action of various kinds, the Commission endeavors, insofar as possible, to look to private sector initiatives in the reshaping of the securities market. Current Commission national market system initiatives are described in Item 1 of Part IB, *supra*. For a general discussion of the Commission's national market system priorities and philosophy, see Securities Exchange Act Releases No. 14416 (Jan. 26, 1978) and 15671 (Mar. 22, 1979) 43 FR 4354 and 44 FR 20360).

III. Contemplated Regulatory Review and Reform Initiatives in 1981

A. Scope and Purpose

The following is a list of regulatory review initiatives which the staff is now considering but which would not commence until 1981. These initiatives illustrate the staff's current priorities with respect to regualtory revision and reform; proposals in these areas have not, however, as yet been presented to the Commission, and the discussion in this section should not be interpreted as necessarily reflecting Commission endorsement of the concepts described. By publishing this listing, the Commission seeks public comment on whether these items would be appropriate areas for it to address and wheather there are other facets of its existing rules which the Commission should consider subjecting to review or possible revision.

B. Specific Matters Under Consideration

1. *Sunset Review of Regulation C.* In Securities Act Release No. 6163, which is described in Item 3 of Part IA, *supra*, and Item 2 of Part IIB, *supra*, the Commission indicated that it contemplated conducting a comprehensive analysis of Regulation C under the Securities Act of 1933[9] as the next integral element in its ongoing review of disclosure requirements. Moreover, a review of Regulation C is consistent with the Commission's goal of interpreting the disclosure requirements of the Securities Act and the Securities Exchange Act. The rules which comprise Regulation C were developed over a long period of time and without a comprehensive framework. Therefore, since this regulation has never been re-examined as a whole, certain of the rules may be obsolete, and some of the policies reflected in these rules may conflict with those contained in other rules, guides, or forms. In this regard, the Division intends to review Regulation C particularly in light of the creation and growth of Regulation S-K;[10] developments resulting from the Guides project review (Item 5 of Part IA, *supra*);

[9] Regulation C consists of Securities Act Rules 400 through 493, 17 CFR 230.400 through 493. These rules govern the registration of securities under that Act and the related disclosure requirements.

[10] Regulation S-K, 17 CFR Part 229.20, is entitled "Standard Instructions For Filing Forms Under Securities Act of 1933 and Securities Exchange Act of 1934."

case law and current administrative practices; and the operation of particular concepts in Regulation C, such as the summary prospectus, which may merit expansion.

2. *Categorization of Regulation S-K Items.* Regulation S-K, the initial step towards integrated disclosure, has been developed without regard to structure. In order to avoid the organizational problems of Regulation C, and to create a useful body of readily accessible disclosure requirements with adequate room for further development, the staff is contemplating a review of Regulation S-K with the objective of developing a useful framework. This project would entail the creation of sections of the regulation dealing with specific disclosure topics, such as business information and accounting and financial data.

3. *Proxy Contests.* Inasmuch as there have been indications that the number of election contests is on the rise, it may be advisable and timely to review the proxy rules in relation to contest situations, particularly Rules 14a-7 and 14a-11, as well as Schedule 14B. Such a study would encompass an analysis of the existing rules and their relationship to case law developments, current policy considerations, and present issuer practice.

4. *Commercial Paper.* The exemption relating to commerical paper in Section 3(a)(3) of the Securities Act of 1933 has received many interpretations over the years. The staff is considering proposing that the Commission commence a rulemaking proceeding, or issue an interpretative release, to clarify the scope of this exemption.

5. *Beneficial Ownership.* Subsection 13(g) of the Securities Exchange Act of 1934 requires that the Commission "take such steps as it deems necessary or appropriate in the public interest and for the protection of investors to avoid unnecessarily duplicative reporting by and minimize the compliance burden on persons required to report" beneficial ownership. Although the purposes of Subsections 13(d), 13(g), and 16(a) of the Securities Exchange Act are somewhat different, the Commission requires similar disclosure pursuant to each. Accordingly, the staff is considering a project designed to reconcile and standardize the reporting requirements applicable to securities ownership in such a way as to lessen the burden on the reporting person while facilitating meaningful disclosure to the public.

Set forth below are some of the issues with which an initiative of this nature would deal:

(1) Although Subsections 13 (d) and (g) and Subsection 16(a) of the Securities Exchange Act have differing purposes, should the definitions of "beneficial ownership" applicable to each be reconciled, and, if so, how?

(2) Is there a need to standardize the filing deadlines and the periods which the various reports cover? If so, how might this be accomplished?

(3) Should the nature of the disclosure required under Subsections 13(d), 13(g), and 16(a) be harmonized and, if so, how might this be accomplished? In general, how might duplicative disclosure be eliminated consistent with the underlying statutory goals? Could the purposes of these sections be accomplished by the filing of a common reporting form?

(4) Would a common form be more cost efficient than the present system?

(5) What are the liability issues attendant upon the creation of a common beneficial ownership reporting form under the Securities Exchange Act?

In order to aid the staff in determining whether to commence such a review, and what its scope should be, the Commission particularly invites comment from interested persons on these questions.

6. *Financial Responsibility Requirements for Brokers and Dealers.* The Commission staff is considering extending its review of the financial repsonsibility rules (*See* Item 7, Part IIB, *supra*) to encompass other financial responsibility requirements for securities brokers and dealers, such as the minimum standards governing the handling and hypothecation by firms of funds and securities of their customers set forth in Rules 15c3-3, 8c-1, and 15c2-1 under the Securities Exchange Act, 17 CFR 240.15c3-3, 240.8c-1, and 240.15c2-1. The staff may also evaulate the operation of the Commission's fidelity bonding rule (Rule 15b10-11, 17 CFR 240.15b10-11) for firms that are not members of a self-regulatory organization.

The provisions of these rules are lengthy and complex, were adopted at various times over a period of many years, and have never been subject to a comprehensive reassessment. Important changes in the nature of the securities business and markets have, however, occurred, since these rules were adopted; these changes are, for the most part, related to the emergence and growth of markets for new securities products and the development of the national market and clearance systems mandated in the Securities Acts Amendments of 1975.

In the course of any examination of the financial responsibility rules, the staff would seek to determine—

(1) Are these provisions unnecessarily complex or inconsistent with one another? If so, can they be better integrated and simplified?

(2) Do the costs and burdens of compliance fall equitably on the various sizes and types of firms? If not, could the rules be appropriately restructured?

(3) Would less burdensome alternative approaches to the various requirements achieve the objective of protecting customer funds and securities? If so, what are these alternatives?

The Commission particularly invites the views of interested members of the public concerning whether these issues would be the appropriate focus for such a study and whether additional avenues of inquiry might fruitfully be pursued.

7. *Investment Company Act Study.* In the later phases of its work, the Investment Company Act Study Group (*see* Item 4 of Part IIB, *supra)* will consider whether to recommend legislative changes in certain fundamental concepts underlying the Act. For example, the Act contemplates that management investment companies generally be organized in a corporate or business trust form which provides for shareholder voting. This requirement is not present in the regulatory schemes of other countries, particularly in Europe, where a nonvoting trust structure predominates. The staff intends to examine the operations of such nonvoting trusts which may provide useful insights and new areas of analysis within which to address the efficacy of our regulatory scheme and to consider alternatives which would lessen regulatory burdens while maintaining a high level of investor protection.

8. *Investment Advisers Act Study.* In addition, as the review of the Investment Advisers Act (*see* Item 5 of Part IIB, *supra*) continues, additional rulemaking under that statute will take place. The staff will also consider certain issues which might result in recommendations which could be implemented only if Congress amends the Act. These issues include minimum professional qualifications, financial integrity requirements, and self-regulatory organizations for investment advisers. Investment Advisers Act Release No. 717 (Apr. 4, 1980) (45 FR 25080) invited comment with respect to various matters which the Commission may consider in connection with its evaluation of whether to recommend legislation in this area.

9. *Investment Company Disclosure Study.* As discussed earlier (*see* Item 6 of Part IIB), the staff is considering a

revision of the investment company prospectus to enable reports to shareholders to be combined with that document. In addition, the staff is considering a more fundamental reexamination of the contents of investment company prospectuses. No examination of the substantive content of investment company prospectuses has been conducted for many years. As part of this examination, the staff might consider whether the prospectuses at present are too lengthy and detailed, and whether some information which is now required to be included can be omitted or presented in an abbreviated form.

IV. Conclusion

The Commission believes that this release will serve two purposes with respect to improving public understanding of, and participation in, Commission regulatory processes. First, Parts I and II alert interested persons to certain significant Commission regulatory decisions likely to be made during the balance of 1980. More broadly, however, Parts II and III serve to inform the public of the scope and priorities of the Commission's staff with respect to reviewing the purpose, impact, and efficacy of existing Commission rules. That review process, especially when it is illuminated by meaningful public participation, is the most effective means by which the Commission can ensure that its rules remain flexible and realistic in the face of changes in the business environment and the secruities and financial communities.

By the Commission.

Shirley E. Hollis,

Assistant Secretary.

June 30, 1980.

[FR Doc. 80-20972 Filed 7-2-80; 8:45 a.m.

BILLING CODE 8010-01-M

Reader Aids

Federal Register
Vol. 45, No. 130
Thursday, July 3, 1980

INFORMATION AND ASSISTANCE

Questions and requests for specific information may be directed to the following numbers. General inquiries may be made by dialing 202-523-5240.

Federal Register, Daily Issue:

202-783-3238	Subscription orders and problems (GPO) "Dial-a-Reg" (recorded summary of highlighted documents appearing in next day's issue):
202-523-5022	Washington, D.C.
312-663-0884	Chicago, Ill.
213-688-6694	Los Angeles, Calif.
202-523-3187	Scheduling of documents for publication
523-5240	Photo copies of documents appearing in the Federal Register
523-5237	Corrections
523-5215	Public Inspection Desk
523-5227	Index and Finding Aids
523-5235	Public Briefings: "How To Use the Federal Register."

Code of Federal Regulations (CFR):

523-3419	
523-3517	
523-5227	Index and Finding Aids

Presidential Documents:

523-5233	Executive Orders and Proclamations
523-5235	Public Papers of the Presidents, and Weekly Compilation of Presidential Documents

Public Laws:

523-5266 -5282	Public Law Numbers and Dates, Slip Laws, U.S. Statutes at Large, and Index
275-3030	Slip Law Orders (GPO)

Other Publications and Services:

523-5239	TTY for the Deaf
523-5230	U.S. Government Manual
523-3408	Automation
523-4534	Special Projects
523-3517	Privacy Act Compilation

FEDERAL REGISTER PAGES AND DATES, JULY

44245-44916 1
44917-45246 2
45247-45564 3

CFR PARTS AFFECTED DURING JULY

At the end of each month, the Office of the Federal Register publishes separately a list of CFR Sections Affected (LSA), which lists parts and sections affected by documents published since the revision date of each title.

3 CFR

Executive Orders:
10560 (Revoked by EO 12220) 44245
10685 (Revoked by EO 12220) 44245
10708 (Revoked by EO 12220) 44245
10746 (Revoked by EO 12220) 44245
10799 (Revoked by EO 12220) 44245
10827 (Revoked by EO 12220) 44245
10884 (Revoked by EO 12220) 44245
10893 (Revoked by EO 12220) 44245
10900 (Revoked by EO 12220) 44245
11846 (See Proc. 4768) 45135
11888 (Amended by EO 12222) 45233
12044 (Revoked by EO 12221) 44249
12196 (Amended by EO 12223) 45235
12220 44245
12221 44249
12222 45233
12223 45235
12224 45243

Proclamations:
4707 (Superseded in part by Proc. 4768) 45135
4768 45135
4769 45237
4770 45245
4771 45247
4772 45249

4 CFR

Proposed Rules:
2 44954
3 44954
4 44954
5 44954
6 44954
7 44954
8 44954
9 44954

5 CFR

Proposed Rules:
351 44304

7 CFR

29 44292
905 45251
908 45252
910 45301
911 ..... 44302, 44303
916 45252
917 44917
1427 44293

Proposed Rules:
410 44305
413 44311
999 44960
1097 45302
1102 45302
1108 45302
2859 44317

8 CFR

204 44251
214 44918

9 CFR

78 44253

Proposed Rules:
308 44317
381 44317

10 CFR

2 45253
25 45256
95 45256
436 44558

Proposed Rules:
20 45302
210 44961
211 44961
212 44961
503 45303
504 45303
506 45303
580 45098

11 CFR

9033 45257

12 CFR

Ch. II 44574
207 44256
225 45257
1204 44919

Proposed Rules:
204 ..... 44962, 45303
225 44963
1204 45303

13 CFR

305 44257
309 44257
400 ..... 44258, 44919

14 CFR

39 45257-45264
71 45265-45268
75 45268

Proposed Rules:
Ch. I 45305

71 45305–45310

15 CFR

Ch. III 44574

16 CFR

13 ..... 44259, 44260, 44920, 44921
300 44260
301 44260
303 44260
Proposed Rules:
13 ..... 44317, 44322, 44324

17 CFR

240 44922
Proposed Rules:
Ch. II 45554
1 44965

18 CFR

282 44923

19 CFR

101 44263

20 CFR

725 44264

21 CFR

520 44264
1220 44265
1304 44266
1306 44266
Proposed Rules:
109 44325
110 44325
225 44325
226 44325
500 44325
509 44325
589 44326

24 CFR

255 45116
841 44267
860 44267

26 CFR

Proposed Rules:
1 45311
48 44965

28 CFR

0 44267
2 44924
55 44268
Proposed Rules:
Ch. I 45311
2 ..... 44966, 44967

29 CFR

102 44302
2700 44301

30 CFR

45 44494
Proposed Rules:
Ch. VII 45313
722 44326
732 45313
943 44967

31 CFR

321 44590
322 44590
330 44600

32 CFR

1–39 ..... 44604, 44758, 44818, 44902

32A CFR

Ch. I 44575
Ch. VI 44574
Ch. VII 44574, 45269
Ch. XV 44574
Ch. XVIII 44587
801 44574

33 CFR

165 45269
175 45269

36 CFR

1151 44925
Proposed Rules:
7 44969

37 CFR

201 45270

39 CFR

265 44270
266 44270
268 44270

40 CFR

52 ..... 44273, 45275
65 45277
421 44926
Proposed Rules:
52 ..... 44970, 45080, 45314, 45318
58 44327
60 ..... 44329, 44970
81 45080
413 45322

41 CFR

Ch. 7 44275
Ch. 101 ..... 44951, 44953
7–6 44283
7–7 44283

42 CFR

405 44287

43 CFR

2800 44518
Proposed Rules:
35 44972

44 CFR

Ch. I 44574
Ch. IV 44574, 45269

45 CFR

Proposed Rules:
177 45130

46 CFR

Ch. II 44587
160 45278
502 45280
Proposed Rules:
151 45327

49 CFR

23 45281
571 45287
1002 ..... 45526, 45534
1003 45534
1004 45528
1011 45525
1033 ..... 45288, 45289
1045A 45534
1047 45524
1056 45534
1062 45534
1100 ..... 45529, 45534
1101 45525
1130 45534
1131 45525
1136 45526
1150 45534
Proposed Rules:
Ch. X 44351, 45545
571 ..... 45334, 45336

50 CFR

17 ..... 44935, 44939
32 45289
296 44942
611 ..... 45291, 45296
655 45296
656 45291
674 44292
Proposed Rules:
20 44540
219 44352
651 45336
664 44972

AGENCY PUBLICATION ON ASSIGNED DAYS OF THE WEEK

The following agencies have agreed to publish all documents on two assigned days of the week (Monday/Thursday or Tuesday/Friday).

This is a voluntary program. (See OFR NOTICE 41 FR 32914, August 6, 1976.)

Monday	Tuesday	Wednesday	Thursday	Friday
DOT/SECRETARY	USDA/ASCS		DOT/SECRETARY	USDA/ASCS
DOT/COAST GUARD	USDA/APHIS		DOT/COAST GUARD	USDA/APHIS
DOT/FAA	USDA/FNS		DOT/FAA	USDA/FNS
DOT/FHWA	USDA/FSQS		DOT/FHWA	USDA/FSQS
DOT/FRA	USDA/REA		DOT/FRA	USDA/REA
DOT/NHTSA	MSPB/OPM		DOT/NHTSA	MSPB/OPM
DOT/RSPA	LABOR		DOT/RSPA	LABOR
DOT/SLSDC	HHS/FDA		DOT/SLSDC	HHS/FDA
DOT/UMTA			DOT/UMTA	
CSA			CSA	

Documents normally scheduled for publication on a day that will be a Federal holiday will be published the next work day following the holiday.

Comments on this program are still invited. Comments should be submitted to the Day-of-the-Week Program Coordinator, Office of the Federal Register, National Archives and Records Service, General Services Administration, Washington, D.C. 20408

REMINDERS

The "reminders" below identify documents that appeared in issues of the **Federal Register** 15 days or more ago. Inclusion or exclusion from this list has no legal significance.

Rules Going Into Effect Today

ENVIRONMENTAL PROTECTION AGENCY

37428 6-3-80 / Approval and promulgation of implementation plans; emergency episodes; Southeast Desert Air Basin, Calif.

FEDERAL COMMUNICATIONS COMMISSION

37210 6-2-80 / FM broadcast station in Malakoff, Tex.; changes made in table of assignments

37210 6-2-80 / FM Broadcast Station in Ticonderoga, N.Y.; changes made in table of assignments

FEDERAL EMERGENCY MANAGEMENT AGENCY

37440 6-3-80 / Disaster assistance; flood insurance requirements

HEALTH, EDUCATION, AND WELFARE DEPARTMENT

Health Care Financing Administration—

22933 4-4-80 / Medicaid provides agreements policies

HEALTH AND HUMAN SERVICES DEPARTMENT

37666 6-3-80 / Grants Administration; procurements by grantees and subgrantees

HOUSING AND URBAN DEVELOPMENT DEPARTMENT

Federal Housing Commission, Office of Assistant Secretary for Housing—

40111 6-13-80 / Low income housing; fair market rents for new construction and substantial rehabilitation

JUSTICE DEPARTMENT

Attorney General—

37620 6-3-80 / Procedures and policies to assure nondiscrimination based on handicap in programs and activities receiving Federal financial assistance

NUCLEAR REGULATORY COMMISSION

37399 6-3-80 / Physical protection of irradiated reactor fuel in transit

POSTAL SERVICE

37427 6-3-80 / Electronic meters in postage meter specifications

37427 6-3-80 / Extension of city delivery

List of Public Laws

Last Listing July 2, 1980

This is a continuing listing of public bills from the current session of Congress which have become Federal laws. The text of laws is not published in the **Federal Register** but may be ordered in individual pamphlet form (referred to as "slip laws") from the Superintendent of Documents, U.S. Government Printing Office, Washington, D.C. 20402 (telephone 202-275-3030).

H.R. 7685 / Pub. L. 96-293 To amend title IV of the Employee Retirement Income Security Act of 1974 to postpone for one month the date on which the corporation must pay benefits under terminated multiemployer plans. (June 30, 1980; 94 Stat. 610) Price $1.

S. 932 / Pub. L. 96-294 Energy Security Act. June 30, 1980; 94 Stat. 611) Price $4.25.

S. 562 / Pub. L. 96-295 To authorize appropriations to the Nuclear Regulatory Commission in accordance with section 261 of the Atomic Energy Act of 1954, as amended, and section 305 of the Energy Reorganization Act of 1974, as amended, and for other purposes. (June 30, 1980; 94 Stat. 780) Price $1.25.

S. 2245 / Pub. L. 96-296 Motor Carrier Act of 1980. (July 1, 1980; 94 Stat. 793) Price $2.