8-6-80
Vol. 45 No. 153
Pages 52139-52354

federal register

Wednesday
August 6, 1980

Highlights

52139 **Strategic Petroleum Reserve** Executive Order

52287 **Grant Programs—Energy** NRC announces proposed availability of FY 1981 funds for financial assistance to enhance technology advancement of nuclear energy safety; apply from 10-1-80 to 9-30-81

52295 **Grant Programs—Refugees** HHS/Sec'y gives notice of grants to assist non-profit refugee Mutual Assistance Association in providing services to persons legally admitted as refugees; apply by 9-8-80

52296 **Medicare** HHS/HCFA gives notice of ruling to discontinue medicare coverage of heart transplant procedures; effective 6-13-80

52144 **Credit** FRS amends regulations regarding extension of credit by Federal Reserve Banks

52173 **Real Estate** FHLBB publishes revisions of real estate lending regulations; comments by 10-6-80

52195 **Fuel** DOE gives notice of alternative fuel production financial assistance; effective 7-29-80

52143 **Aliens** Justice/INS publishes regulations regarding registration and fingerprinting of aliens in the United States; effective 8-5-80

CONTINUED INSIDE

FEDERAL REGISTER Published daily, Monday through Friday, (not published on Saturdays, Sundays, or on official holidays), by the Office of the Federal Register, National Archives and Records Service, General Services Administration, Washington, D.C. 20408, under the Federal Register Act (49 Stat. 500, as amended; 44 U.S.C. Ch. 15) and the regulations of the Administrative Committee of the Federal Register (1 CFR Ch. I). Distribution is made only by the Superintendent of Documents, U.S. Government Printing Office, Washington, D.C. 20402.

The Federal Register provides a uniform system for making available to the public regulations and legal notices issued by Federal agencies. These include Presidential proclamations and Executive Orders and Federal agency documents having general applicability and legal effect, documents required to be published by Act of Congress and other Federal agency documents of public interest. Documents are on file for public inspection in the Office of the Federal Register the day before they are published, unless earlier filing is requested by the issuing agency.

The Federal Register will be furnished by mail to subscribers, free of postage, for $75.00 per year, or $45.00 for six months, payable in advance. The charge for individual copies is $1.00 for each issue, or $1.00 for each group of pages as actually bound. Remit check or money order, made payable to the Superintendent of Documents, U.S. Government Printing Office, Washington, D.C. 20402.

There are no restrictions on the republication of material appearing in the Federal Register.

Area Code 202-523-5240

Highlights

52342 **Credit** USDA/CCC proposes intermediate credit export sales program for foreign market development facilities; comments by 9-5-80 (Part VII of this issue)

52177 **Securities** FHLBB publishes proposal regarding investment in consumer loans, commercial paper and corporate debt securities; comments by 10-6-80

52297 **Health Care** HHS/PHS announces scientific evaluation of clinical safety and effectiveness of electrical stimulation for treatment of facial nerve palsy

52326 **Accreditation** Commerce/Sec'y requests comments by 10-6-80 on preliminary finding of need to accredit laboratories that provide electromagnetic calibration services (Part IV of this issue)

52145 **Cadets** DOD/AF amends regulations regarding enlistment and discharge of AFROTC cadets; effective 7-15-80

52306 **Surface Mining** Interior/SMO amends bond and insurance requirements for surface coal mining and reclamation operations; effective 8-6-80 (Part III of this issue)

52151 **Telephone** FCC publishes regulations regarding connection of terminal equipment to the telephone network

52166 **Improving Government Regulations** Treasury/Comptroller publishes semiannual agenda regulations

52149 **Radio** FCC publishes regulations regarding applicants filing applications in the Domestic Public Land Mobile Radio Service must demonstrate interference free operation; effective 9-8-80

52284 **Privacy Act Document** Justice

52299 **Sunshine Act Meetings**

Separate Parts of This Issue

52303 **Part II, Interior/BLM**
52306 **Part III, Interior/SMREO**
52326 **Part IV, Commerce/Sec'y**
52332 **Part V, USDA/FGIS**
52339 **Part VI, USDA/FGIS**
52342 **Part VII, USDA/CCC**

Contents

Federal Register
Vol. 45, No. 153
Wednesday, August 6, 1980

The President
EXECUTIVE ORDERS
52139 Petroleum Reserve, Strategic (EO 12231)
EXECUTIVE AGENCIES

Agency for International Development
NOTICES
Authority delegations:
52261 Asia, Mission Directors, et al.; contracting functions

Aging, Federal Council
NOTICES
52188 Meetings

Agricultural Marketing Service
RULES
52143 Celery grown in Fla.
52141 Onions grown in Idaho and Oreg.
52141 Potatoes (Irish) grown in Wash.

Agriculture Department
See Agricultural Marketing Service; Commodity Credit Corporation; Federal Grain Inspection Service; Forest Service; Soil Conservation Service.

Air Force Department
RULES
Military personnel:
52145 ROTC Cadets; enlistment and discharge requirements, policies, and procedures

Antitrust Division
NOTICES
Competitive impact statements and proposed consent judgments:
52280 Ashland Oil, Inc., et al.

Civil Aeronautics Board
NOTICES
Hearings, etc.:
52189 El Dorado/Camden, Ark., essential air service

Commerce Department
See also Foreign-Trade Zones Board; National Technical Information Service.
NOTICES
Laboratory Accreditation Program, National Voluntary:
52326 Electromagnetic calibration services

Commodity Credit Corporation
PROPOSED RULES
52342 Foreign market development facilities; intermediate credit export sales program

Commodity Futures Trading Commission
NOTICES
Futures contracts, proposed; availability:
52192 New Orleans Commodity Exchange
52299 Meetings; Sunshine Act

Comptroller of Currency
PROPOSED RULES
Improving Government regulations:
52166 Regulatory agenda

Defense Department
See Air Force Department; Engineers Corps.

Drug Enforcement Administration
NOTICES
Schedules of controlled substances; production quotas:
52286 Schedules I and II, 1981 aggregate

Economic Regulatory Administration
NOTICES
Consent orders:
52195 Field Oil Co.
Energy Supply and Environmental Coordination Act; prohibition orders, rescissions, etc.:
52196 International Paper Co.
Natural gas; fuel oil displacement certification applications:
52198 Arizona Public Service Co.
52199 International Harvester Co.

Education Department
NOTICES
Meetings:
52194 Adult Education National Advisory Council

Energy Department
See also Economic Regulatory Administration; Federal Energy Regulatory Commission.
NOTICES
52195 Alternative fuels; feasibility studies and cooperative agreements
Meetings:
52195 Tar sands definitional workshop

Engineers Corps
NOTICES
Environmental statements; availability, etc.:
52193 Central and South Florida Canal 18, Jupiter Inlet and Loxahatchee River Study
52192 Cowanesque Reservoir; Toiga County, Pa.; flood control storage to water supply storage
52194 Delta Pumping Plant, Tracy, Calif.; additional pumps

Environmental Protection Agency
RULES
Air quality implementation plans; approval and promulgation; various States, etc.:
52148 Texas
Waste management, solid:
52149 Permit programs, consolidated; application and report signatory and certification requirements; policy statement
PROPOSED RULES
Air quality implementation plans; approval and promulgation; various States, etc.:
52184 Washington; advance notice

Pesticide programs:
52184 Registration of pesticide producing establishments, submission of reports, labeling; addition of producers of active ingredients; extension of time
Water pollution; effluent guidelines for certain point source categories:
52185 Textile mills; best available technology, best conventional technology, and pretreatment and new source performance standards; correction
NOTICES
Meetings:
52241 Science Advisory Board
Pesticides; temporary tolerances:
52241 American Cyanamid Co.
Pesticides; tolerances in animal feeds and human food:
52241 American Cyanamid Co.; correction
Toxic and hazardous substances control:
52242 Premanufacture exemption applications
52241, 51243 Premanufacture notices receipts (2 documents)

Federal Communications Commission
RULES
Commercial radio operators and radio services, special:
52154 Marine radio operator permit establishment, radiotelephone third class operator permit abolishment, and examination order for licenses
Common carrier services:
52149 Domestic public mobile radio services; demonstration of interference-free operation when filing applications
52151 Terminal equipment, connection to telephone network
Television broadcasting:
52153 Cable television; system community unit facilities serving less than fifty people; registration requirement; clarification
Television stations; table of assignments:
52152 Michigan and Ohio
NOTICES
Hearings, etc.:
52244 Casey Broadcasting Co., Inc., et al.
52246 Denair Broadcasting Co., Inc., et al.
52252 Dick Lashbrook Corp.
52247 Everybody's Mood, Inc., et al.
52248 Grants Pass Broadcasting Co., et al.
52249 Hispanic Broadcasting Co., et al.
52253 Payne, Jim T., et al.
52253 Rockbridge Communications, Inc., et al.
52254 Southwest Television, Ltd., et al.
52255 Valcom, Inc., et al.
52256 Van Buren Community Service Broadcasters, Inc., et al.
52256 Visionary Radio Euphonics, Inc., et al.
Meetings:
52257 Marine Services Radio Technical Commission

Federal Energy Regulatory Commission
NOTICES
Hearings, etc.:
52199 Alabama-Tennessee Natural Gas Co.
52200 Alaskan Northwest National Transportation Co.
52200 Central Virginia Electric Cooperative et al.
52200 Cimarron Transmission Co. et al.
52201 Consolidated Gas Supply Corp.
52203 El Paso Natural Gas Co. (2 documents)
52204 Harrison Western Corp. (2 documents)
52205 Michigan Wisconsin Pipe Line Co. (2 documents)
52206 Michigan Wisconsin Pipe Line Co. et al.
52206 Monongahela Power Co. et al.
52207 Natural Gas Pipeline Co. of America (2 documents)
52208 Panhandle Eastern Pipe Line Co.
52208 Peoples Natural Gas Co.
52209 Public Service Co. of Colorado (3 documents)
52210 Public Service Co. of New Mexico
52210 Tennessee Gas Pipeline Co.
52210 Transcontinental Gas Pipe Line Corp. et al.
52211 Trunkline Gas Co.
52211 United Gas Pipe Line Co.
52212 Virginia Electric & Power Co.
Natural Gas Policy Act of 1978:
52212-52232 Jurisdictional agency determinations (3 documents)

Federal Grain Inspection Service
PROPOSED RULES
Grain standards:
52339 Warehouseman's sample-lot inspection certificate
NOTICES
Grain standards; inspection points:
52332-52335 Indiana (6 documents)

Federal Home Loan Bank Board
PROPOSED RULES
Federal home loan bank system, etc.:
52173 Real estate lending regulations; security property location restrictions, lien priority, and dollar limits on loans
Federal savings and loan system, etc.:
52177 Consumer loans, commercial paper, and corporate debt securities; investment

Federal Maritime Commission
NOTICES
Complaints filed:
52257 Missouri Pacific Railroad Co.
Rate increases, etc.; investigations and hearings, etc.:
52258 Bultaco International, Ltd., et al.
52258 Certified Corp. et al.
52258 Rebates and similar malpractices in U.S. foreign commerce

Federal Reserve System
RULES
Credit extension by Federal Reserve Banks (Regulation A):
52144 Discount rate changes
NOTICES
52299 Meetings; Sunshine Act (2 documents)

Fine Arts Commission
NOTICES
52257 Meetings

Fish and Wildlife Service
RULES
Hunting:
52163 Seney National Wildlife Refuge, Mich., et al.

Foreign-Trade Zones Board
NOTICES
Applications, etc.:
52189 Ohio
52189 Oregon

Forest Service
NOTICES
Environmental statements; availability, etc.:
52188 White River National Forest, Spruce Creek Wilderness Study Area, Colo.; hearing

General Accounting Office
NOTICES
52259 Regulatory reports review; proposals, approvals, violations, etc. (NRC)

Health, Education, and Welfare Department
See Education Department; Health and Human Services Department.

Health and Human Services Department
See also Health Care Financing Administration; Public Health Service.
NOTICES
52295 Resettling refugees; availability of funding

Health Care Financing Administration
NOTICES
Medicare:
52296 Heart transplantation procedures; exclusion from coverage

Housing and Urban Development Department
See Interstate Land Sales Registration Office.

Immigration and Naturalization Service
RULES
52143 Aliens, registration and fingerprinting; reference to alien registration receipt card (Form I-551)

Interior Department
See also Fish and Wildlife Service; Land Management Bureau; Surface Mining Office.
NOTICES
Meetings:
52261 Oil Shale Task Force
52260 Oil shale tract delineation-tract selection criteria

International Broadcasting Board
NOTICES
52299 Meetings; Sunshine Act

International Development Cooperation Agency
See also Agency for International Development.
NOTICES
Authority delegations:
52261 Agency for International Development, Administrator; trade and development program legal counsel functions

International Trade Commission
NOTICES
Import investigations:
52273 Chains and parts of cast-iron or steel from Italy
52273 Menthol from Japan and China
52280 Motor vehicles and certain chassis and bodies
52280 Slide fastener stringers, etc.

Interstate Commerce Commission
RULES
Practice and procedure:
52158 Motor carrier operating authority application procedures; interim rule and request for comments; correction
Railroad car service orders:
52160 Freight cars; distribution
Railroad car service orders; various companies:
52158 Chicago, Milwaukee, St. Paul & Pacific Railroad Co.
52161 Kansas City Terminal Railway Co.
Tariffs and schedules:
52161 Motor carriers and freight forwarders; identification of rates filed under zone of rate freedom
PROPOSED RULES
Practice and procedure:
52186 Rail carriers; recordation of documents; retention schedule
NOTICES
Motor carriers:
52271 Operating rights applications
52262, 52263 Permanent authority applications (2 documents)
52264, 52271 Temporary authority applications (2 documents)
Railroad services abandonment:
52272 Illinois Central Gulf Railroad Co.
52272 Oregon Short Line Railroad Co. et al.

Interstate Land Sales Registration Office
RULES
Interstate Land Sales Full Disclosure Act:
52144 Registration, purchaser's revocation rights, sales practices and standards, etc.; correction

Justice Assistance, Research and Statistics Office
NOTICES
Meetings:
52286 Juvenile Justice and Delinquency Prevention National Advisory Committee

Justice Department
See also Antitrust Division; Drug Enforcement Administration; Immigration and Naturalization Service; Justice Assistance, Research and Statistics Office.
RULES
Organization, functions, and authority delegations:
52145 Marshals Service, Director; approval of expenditures
52145 Small and Disadvantaged Business Utilization Office; establishment
PROPOSED RULES
52183 Judicial proceedings, open; policy guidelines
52183 Privacy Act; implementation
NOTICES
Pollution control; consent judgments:
52284 Lenoir City, N.C.
52284 Prisons Bureau institutions; list addition
52284 Privacy Act; systems of records

Land Management Bureau
PROPOSED RULES
52303 Alaska occupancy and use and native allotments; eligibility requirements and procedures

NOTICES
Meetings:
52260 Las Vegas District Grazing Advisory Board
52260 Susanville District Grazing Advisory Board
Sale of public lands:
52260 California

Legal Services Corporation
NOTICES
52287 Grants and contracts; applications (2 documents)

National Technical Information Service
NOTICES
52190, 52191 Inventions, Government-owned; availability for licensing (2 documents)

Nuclear Regulatory Commission
NOTICES
Applications, etc.:
52290 Dairyland Power Cooperative
52291 Georgia Power Co. et al.
52290 Kansas Gas & Electric Co. et al.
52291 Metropolitan Edison Co. et al.
52291 Omaha Public Power District
52292 Toledo Edison Co. et al.
Grants; availability, etc.:
52287 Nuclear energy safety technology advancement
Meetings:
52292 Reactor Safeguards Advisory Committee
52293 Regulatory guides; issuance and availability

Public Health Service
NOTICES
52297 Electrical stimulation; clinical safety and effectiveness for treatment of facial nerve palsy; technology evaluation
Meetings:
52298 Health Care Technology National Council

Small Business Admintration
NOTICES
Applications, etc.:
52293 First Oregon Capital Corp.
52293 PBC Venture Capital, Inc.
52294 Southwestern Venture Capital of Texas, Inc.
Disaster areas:
52294 Oklahoma

Soil Conservation Service
NOTICES
Environmental statements; availability, etc.:
52188 Buggy Creek Critical Area Treatment RC&D Measure, Okla.
52189 Upper Howard's Creek Watershed, Ky.

Surface Mining Office
RULES
Surface coal mining and reclamation enforcement operations:
52306 Permanent regulatory program; performance bond requirements

Tennessee Valley Authority
NOTICES
52299 Meetings; Sunshine Act

Treasury Department
See also Comptroller of Currency.
NOTICES
Committees; establishment, renewals, terminations, etc.:
52295 International Monetary System Advisory Committee
52295 Senior Executive Service Performance Review Board; membership

Wage and Price Stability Council
NOTICES
Meetings:
52295 Pay Advisory Committee; cancellation

MEETINGS ANNOUNCED IN THIS ISSUE

EDUCATION DEPARTMENT
52194 Adult Education, National Advisory Council, 8-21 and 8-22-80

ENERGY DEPARTMENT
52195 Tar Sands Definitional Workshop, 8-7-80

ENVIRONMENTAL PROTECTION AGENCY
52241 Science Advisory Board, 8-8-80

FINE ARTS COMMISSION
52257 Meeting, 9-3-80

HEALTH AND HUMAN SERVICES DEPARTMENT
Federal Council on the Aging—
52188 Meeting, 8-25 and 8-26-80
Public Health Service—
52298 Health Care Technology National Council, 8-14 and 8-15-80

INTERIOR DEPARTMENT
Bureau of Land Management—
52260 District Grazing Advisory Board, Susanville, Calif., 9-9-80
52260 Las Vegas District Grazing Advisory Board, 8-13-80
Office of the Secretary—
52261 Oil shale task force, 8-26 and 8-27-80
52260 Oil Shale Tract Delineation-Tract Selection Criteria, 8-25 and 8-28-80

JUSTICE DEPARTMENT
Juvenile Justice and Delinquency Prevention Office—
52286 National Advisory Committee for Juvenile Justice and Delinquency Prevention, 8-20 through 8-23-80

NUCLEAR REGULATORY COMMISSION
52292 Reactor Safeguards Advisory Commission, Reactor Fuel Subcommittee, 8-21-80

CANCELLED MEETING

COUNCIL ON WAGE AND PRICE STABILITY
52295 Pay Advisory Committee, 8-80-80

HEARINGS

AGRICULTURE DEPARTMENT
Forest Service—
52188 Spruce Creek Wilderness Study Area, White River National Forest, Pitkin County, Colorado, 9-9-80

INTERNATIONAL TRADE COMMISSION
52280 Certain Motor Vehicles and Certain Chassis and Bodies Therefor, 10-8-80

CFR PARTS AFFECTED IN THIS ISSUE

A cumulative list of the parts affected this month can be found in the Reader Aids section at the end of this issue.

3 CFR
Executive Orders:
11790 (*See* EO 12231) ...52139
12231 ...52139

7 CFR
946...52141
958...52141
967...52143
Proposed Rules:
800...52339
1492...52342

8 CFR
264...52143

12 CFR
201...52144
Proposed Rules:
Ch. I...52166
525...52173
541 (2 documents)...52173, 52177
545 (2 documents)...52173, 52177
561...52177
563 (2 documents)...52173, 52177

24 CFR
1710...52144

28 CFR
0 (2 documents)...52145
Proposed Rules:
16...52183
50...52183

30 CFR
800...52306
801...52306
805...52306
806...52306
807...52306
808...52306

32 CFR
888d...52145

40 CFR
52...52148
122...52149
Proposed Rules:
52...52184
167...52184
169...52184
410...52185

43 CFR
Proposed Rules:
2560...52303

47 CFR
13...52154
22...52149
68...52151
73...52152
76...52153
81...52154
83...52154
87...52154

49 CFR
1002...52158
1003...52158
1033 (3 documents)...52158, 52160, 52161
1045A...52158
1056...52158
1062...52158
1100...52158
1130...52158
1150...52158
1309...52161
1310...52161
Proposed Rules:
1116...52186

50 CFR
32...52163

Federal Register
Vol. 45, No. 153
Wednesday, August 6, 1980

Presidential Documents

Title 3—

The President

Executive Order 12231 of August 4, 1980

Strategic Petroleum Reserve

By the authority vested in me as President of the United States of America by Title VIII of the Energy Security Act (Public Law 96-294) and by Section 301 of Title 3 of the United States Code, and in order to meet the goals and requirements for the strategic petroleum reserve, it is hereby ordered as follows:

1-101. The functions vested in the President by Section 160(c) of the Energy Policy and Conservation Act, as amended, are delegated to the Secretary of Energy (42 U.S.C. 6240(c); see Section 801 of the Energy Security Act).

1-102. The functions vested in the President by Section 7430(k) of Title 10 of the United States Code are delegated to the Secretary of Energy (see Section 804(b) of the Energy Security Act).

1-103. The functions vested in the President by Section 805(a) of the Energy Security Act are, consistent with Section 2 of Executive Order No. 11790, as amended, delegated to the Secretary of Energy.

Jimmy Carter

THE WHITE HOUSE,
August 4, 1980.

[FR Doc. 80-23907
Filed 8-5-80; 11:58 am]
Billing code 3195-01-M

Rules and Regulations

Federal Register
Vol. 45, No. 153
Wednesday, August 6, 1980

This section of the FEDERAL REGISTER contains regulatory documents having general applicability and legal effect, most of which are keyed to and codified in the Code of Federal Regulations, which is published under 50 titles pursuant to 44 U.S.C. 1510.
The Code of Federal Regulations is sold by the Superintendent of Documents. Prices of new books are listed in the first FEDERAL REGISTER issue of each month.

DEPARTMENT OF AGRICULTURE

Agricultural Marketing Service

7 CFR Part 946

Irish Potatoes Grown in Washington; Expenses and Rate of Assessment

AGENCY: Agricultural Marketing Service, USDA.

ACTION: Final rule.

SUMMARY: This regulation authorizes expenses for the functioning of the State of Washington Potato Committee. It enables the committee to collect assessments from first handlers on assessable potatoes and to use the resulting funds for its expenses.

EFFECTIVE DATE: July 1, 1980.

FOR FURTHER INFORMATION CONTACT: Charles W. Porter, Chief, Vegetable Branch, Fruit and Vegetable Division, AMS, U.S. Department of Agriculture, Washington, D.C. 20250 (202) 447-2615. The Final Impact Statement relating to this rule is available upon request from Mr. Porter.

SUPPLEMENTARY INFORMATION: *Findings.* This final action has been reviewed under USDA procedures established in Secretary's Memorandum 1955 to implement Executive Order 12044, and has been classified "not significant."

Pursuant to Marketing Order No. 946, as amended (7 CFR Part 946), regulating the handling of potatoes grown in Washington, effective under the Agricultural Marketing Agreement Act of 1937, as amended (7 U.S.C. 601-674), and upon other information, it is found that the expenses and rate of assessment which follows will tend to effectuate the declared policy of the act.

It is further found that it is impracticable and contrary to the public interest to provide 60 days for interested persons to file comments or to engage in public rulemaking procedure, and that good cause exists for not postponing the effective date of this section until 30 days after publication in the Federal Register (5 U.S.C. 553) because the order requires that the rate of assessment for a particular fiscal period shall apply to all assessable potatoes from the beginning of such period. Handlers and other interested persons were given an opportunity to submit information and views on the expenses and assessment rate at an open public meeting of the committee, held July 8, 1980, in Moses Lake, Washington. To effectuate the declared purposes of the act it is necessary to make these provisions effective as specified.

7 CFR Part 946 is amended by adding a new § 946.233 as follows:

§ 946.233 Expenses and rate of assessment.

(a) The reasonable expenses that are likely to be incurred during the fiscal period ending June 30, 1981, by the State of Washington Potato Committee for its maintenance and functioning, and for such other purposes as the Secretary determines to be appropriate will amount to $19,150.

(b) The rate of assessment to be paid by each handler in accordance with this part shall be $0.003 per hundredweight, or equivalent quantity, of assessable potatoes handled by him as the first handler during the fiscal period, except that potatoes for livestock feed, charity, seed, canning, freezing and "other processing" as defined in the act shall be exempt.

(c) Unexpended income in excess of expenses for the fiscal period may be carried over as a reserve to the extent authorized in § 946.42(a).

(d) Terms used in this section shall have the same meaning as when used in the marketing agreement and this part.

(Secs. 1-19, 48 Stat. 31, as amended; 7 U.S.C. 601-674)

Dated: July 31, 1980.

D. S. Kuryloski,

Deputy Director, Fruit and Vegetable Division, Agricultural Marketing Service.

[FR Doc. 80-23633 Filed 8-5-80; 8:45 am]
BILLING CODE 3410-02-M

7 CFR Part 958

Onions Grown in Certain Designated Counties in Idaho and Malheur County, Oreg.; Handling Regulation

AGENCY: Agricultural Marketing Service, USDA.

ACTION: Final rule.

SUMMARY: This regulation requires fresh market shipments of onions grown in certain designated counties in Idaho and Malheur County, Oregon, to be inspected and meet minimum quality and size requirements. The regulation should promote orderly marketing of such onions and keep less desirable qualities and sizes from being shipped to consumers.

EFFECTIVE DATE: August 6, 1980.

FOR FURTHER INFORMATION CONTACT: Charles W. Porter, Chief, Vegetable Branch, Fruit and Vegetable Division, AMS, U.S. Department of Agriculture, Washington, D.C. 20250 (202) 447-2615. The Final Impact Statement relative to this final rule is available on request from the above named individual.

SUPPLEMENTARY INFORMATION: This final action has been reviewed under USDA procedures established in Secretary's Memorandum 1955 to implement Executive Order 12044 and has been classified "not significant."

Marketing Agreement No. 130 and Order No. 958, both as amended (7 CFR Part 958), regulate the handling of onions grown in certain designated counties in Idaho and Malheur County, Oregon. It is effective under the Agricultural Marketing Agreement Act of 1937, as amended (7 U.S.C. 601-674). The Idaho-Eastern Oregon Onion Committee, established under the order, is responsible for its local administration.

Notice of rulemaking was published in the July 16, 1980, Federal Register (45 FR 47692). The notice afforded interested persons through July 31, 1980, to file written data, views or arguments pertaining to that proposal. None was filed.

This regulation is based upon unanimous recommendations made by the committee at its public meeting in Ontario, Oregon, on June 19, 1980. The recommendations of the committee reflect its appraisal of the composition of the 1980 crop of Idaho-Eastern Oregon onions and the marketing prospects for this season and are

consistent with the marketing policy it adopted. Harvesting of onions is expected to begin about August 1.

The grade, size, pack, maturity and inspection requirements specified herein are necessary to prevent onions of low quality or less desirable sizes from being distributed in fresh market channels. They also provide consumers with good quality onions consistent with the overall quality of the crop, and maximize returns to producers for the preferred quality and sizes.

Exceptions are specified to certain of these requirements to recognize special situations in which such requirements are inappropriate or unreasonable. Shipments are allowed to certain special purpose outlets without regard to the grade, size, maturity, pack and inspection requirements, provided that safeguards are met to prevent such onions from reaching unauthorized outlets.

Special purpose shipments are allowed for planting, livestock feed, charity, dehydration, extraction and pickling since such shipments normally do not enter the commercial fresh market channels and no useful purpose is saved by regulating such shipments. Onions for canning and freezing are exempt under the legislative authority for this part.

Findings. After consideration of all relevant matters, including the proposal in the notice, it is found that the handling regulation will tend to effectuate the declared policy of the act.

It is further found that good cause exists for not postponing the effective date of this regulation until 30 days after its publication in the Federal Register (5 U.S.C. 553) in that (1) shipments of onions grown in the production area will begin on or about the effective date specified herein, (2) to maximize benefits to producers, this regulation should apply to as many shipments as possible during the marketing season, (3) notice of the regulation was published in the Federal Register of July 16, 1980, and information regarding its provisions, which are similar to those in effect during the previous season, has been made available to producers and handlers in the production area, and (4) compliance with this regulation will not require any special preparation by handlers which cannot be completed by the effective date.

7 CFR Part 958 is amended by adding a new § 958.325 as follows:

§ 958.325 Handling regulation.

During the period August 6, 1980, through April 30, 1981, no person may handle any lot of onions, except braided red onions, unless such onions are at least "moderately cured," as defined in paragraph (f) of this section, and meet the requirements of paragraphs (a) and (b) of this section, or unless such onions are handled in accordance with paragraphs (c) and (d), or (e) of this section.

(a) *Grade and size requirements.* (1) *White varieties.* Shall be either:

(i) U.S. No. 2, 1 inch minimum to 2 inches maximum diameter; or

(ii) U.S. No. 2, if not more than 30 percent of the lot is comprised of onions of U.S. No. 1 quality, and at least 1½ inches minimum diameter; or

(iii) U.S. No. 1, at least 1½ inches minimum diameter.

However, none of these three categories of onions may be commingled in the same bag or other container.

(2) *Red varieties.* U.S. No. 2 or better grade, at least 1½ inches minimum diameter.

(3) *All other varieties.* Shall be either:

(i) U.S. No. 2 grade, at least 3 inches minimum diameter, if not more than 30 percent of the lot is comprised of onions of U.S. No. 1 quality; or

(ii) U.S. No. 1, 1½ inches minimum to 2¼ inches maximum diameter; or

(iii) U.S. No. 1, at least 2¼ inches minimum diameter.

However, none of these three categories of onions may be commingled in the same bag or other container.

(b) *Inspection.* No handler may handle any onions regulated hereunder unless such onions are inspected by the Federal-State Inspection Service and are covered by a valid applicable inspection certificate, except when relieved of such requirement pursuant to paragraphs (c) or (e) of this section.

(c) *Special purpose shipments.* The minimum grade, size, maturity and inspection requirements of this section shall not be applicable to shipments of onions for any of the following purposes:

(1) Planting; (2) livestock feed; (3) charity; (4) dehydration; (5) canning; (6) freezing; (7) extraction; and (8) pickling.

(d) *Safeguards.* Each handler making shipments of onions for dehydration, canning, freezing, extraction or pickling pursuant to paragraph (c) of this section shall:

(1) First apply to the committee for and obtain a Certificate of Privilege to make such shipments;

(2) Prepare, on forms furnished by the committee, a report in quadruplicate on each individual shipment to such outlets authorized in paragraph (c) of this section;

(3) Bill or consign each shipment directly to the applicable processor; and

(4) Forward one copy of such report to the committee office and two copies to the processor for signing and returning one copy to the committee office. Failure of the handler or processor to report such shipments by promptly signing and returning the applicable report to the committee office may be cause for cancellation of such handler's Certificate of Privilege and/or the processor's eligibility to recieve further shipments pursuant to such Certificate of Privilege. Upon cancellation of any such Certificate of Privilege the handler may appeal to the committee for reconsideration.

(e) *Minimum quantity exemption.* Each handler may ship up to, but not to exceed, one ton of onions each day without regard to the inspection and assessment requirements of this part, if such onions meet minimum grade, size, and maturity requirements of this section. This exception shall not apply to any portion of a shipment that exceeds one ton of onions.

(f) *Definitions.* The terms "U.S. No. 1" and "U.S. No. 2" have the same meaning as defined in the United States Standards for Grades of Onions (Other Than Bermuda-Granex-Grano and Creole Types), as amended (7 CFR 2851.2830–2851.2854), or the United States Standards for Grades of Bermuda-Granex-Grano Type Onions (7 CFR 2851.3195–2851.3209), whichever is applicable to the particular variety, or variations thereof specified in this section. The term "braided red onions" means onions of red varieties with tops braided (interlaced). The term "moderately cured" means the onions are mature and are more nearly well curred than fairly well cured. Other terms used in this section have the same meaning as when used in Marketing Agreement No. 130 and this part.

(g) *Applicability to imports.* Pursuant to § 8e of the act and § 980.117 "*Import regulations; onions*" (43 FR 5499); onions imported during the effective period of this section shall meet the grade, size, quality and maturity requirements specified in the introductory paragraph and paragraph (a) of this section.

(Secs. 1–19, 48 stat. 31, as amended; 7 U.S.C. 601–674)

Dated, August 1, 1980, to become effective August 6, 1980.

D. S. Kuryloski,

Deputy Director, Fruit and Vegetable Division, Agricultural Marketing Service.

[FR Doc. 80-23737 Filed 8-5-80; 8:45 am]

BILLING CODE 3410-02-M

7 CFR Part 967

Celery Grown in Florida; Handling Regulation

AGENCY: Agricultural Marketing Service, USDA.

ACTION: Final rule.

SUMMARY: This handling regulation establishes the quantity of Florida celery to be marketed fresh during the 1980–81 season, with the objective of assuring adequate supplies and orderly marketing.

EFFECTIVE DATE: August 6, 1980.

FOR FURTHER INFORMATION CONTACT: Charles W. Porter (202) 447–2615.

SUPPLEMENTARY INFORMATION: This action is consistent with the marketing policy for 1980–81 which was designated "significant" under the procedures of Executive Order 12044.

The marketing policy and regulation were unanimously recommended by the Florida Celery Committee following discussion at a public meeting at Orlando on June 11, 1980. A final impact analysis on the marketing policy is available from Charles W. Porter, Chief, Vegetable Branch, Fruit and Vegetable Division, AMS, USDA, Washington, D.C. 20250 (202) 447–2615.

Marketing Agreement No. 149 and Order No. 967, both as amended (7 CFR 967) regulate the handling of celery grown in Florida. It is effective under the Agricultural Marketing Agreement Act of 1937, as amended (7 U.S.C. 601–674). The Florida Celery Committee, established under the order, is responsible for local administration.

The committee recommended a Marketable Quantity of 8,601,309 crates of fresh celery for the 1980–81 season. This is based on the appraisal of the expected supply and prospective market demand.

Notice of the proposed regulation was published in the July 16 Federal Register (45 FR 47693) inviting written comments by July 31, 1980. None was received.

The 8.6 million crate Marketable Quantity is ten percent more than the approximately 7.8 million crates expected to be marketed fresh during the season which ended July 31, 1980. Each producer registered pursuant to § 967.37(f) will have an allotment equal to 100 percent of his historical marketings. This regulation provides the industry an opportunity to (1) produce to its fullest capacity for the benefit of the consumer, and (2) determine its actual or potential maximum production capacity.

As required by § 967.37(d)(1) a reserve of six percent of the 1980–81 total Base Quantities is authorized for new producers and for increases by existing producers, with 277,700 crates to be allotted to each category. One producer submitted an application for 30,000 crates additional Base Quantities for use during the upcoming season and it was approved.

To maximize the benefits of orderly marketing the regulation should become effective as early as possible in August, when the marketing year begins. Interested persons were given an opportunity to comment on the proposal at an open public meeting on June 11, where it was unanimously recommended by the committee. This regulation is similar to ones in effect for past seasons.

Findings. On the basis of all considerations it is believed that this regulation will tend to effectuate the declared policy of the act.

It is hereby further found that good cause exists for not postponing the effective date of this section until 30 days after publication in the Federal Register (5 U.S.C. 553) in that (1) notice was given of the handling regulation set forth in this section through publicity in the production area and by publication in the July 16 Federal Register, (2) as provided in the marketing agreement and order, this regulation applies to celery marketed during the 1980–81 season, (3) compliance with this section will not require any special preparation by handlers which cannot be completed prior to the time actual handling of harvested celery begins, approximately the latter part of October, (4) prompt issuance of this regulation will be beneficial to all interested persons because it should afford producers and handlers maximim time to plan their operations accordingly, and (5) no useful purpose will be served by postponing such issuance.

7 CFR Part 967 is amended by adding a new § 967.316 as follows:

§ 967.316 Handling regulation; marketable quantity; and uniform percentage for the 1980–81 season ending July 31, 1981.

(a) The Marketable Quantity is established under § 967.36(a) as 8,601,309 crates of celery.

(b) As provided in § 967.38(a), the Uniform Percentage shall be 100 percent.

(c) Pursuant to § 967.36(b), no handler shall handle any harvested celery unless it is within the Marketable Allotment of a producer who has a Base Quantity and such producer authorizes the first handler thereof to handle it.

(d) As required by § 967.37(d)(1) a reserve of six percent of the total Base Quantities is hereby authorized for (1) new producers and (2) increases for existing Base Quantity holders with 277,700 crates allotted to each category.

(e) Terms used herein shall have the same meaning as when used in the said marketing agreement and order.

(Secs. 1–19, 48 Stat. 31, as amended; 7 U.S.C. 601–674)

Dated: August 1, 1980, to become effective August 6, 1980.

D. S. Kuryloski,

Deputy Director, Fruit and Vegetable Division, Agricultural Marketing Service.

[FR Doc. 80-23736 Filed 8-5-80; 8:45 am]

BILLING CODE 3410-02-M

DEPARTMENT OF JUSTICE

Immigration and Naturalization Service

8 CFR Part 264

Registration and Fingerprinting of Aliens in the United States; Reference to Form I-551

AGENCY: Immigration and Naturalization Service, Justice.

ACTION: Final rule.

SUMMARY: This document amends two sections of the regulations of the Immigration and Naturalization Service to include reference to the new Alien Registration Receipt Card, Form I-551. The amendments are necessary because the Service now issues Form I-551 as the alien registration document to aliens entitled to evidence of alien registration. The amendments are intended to update the Service's regulations.

EFFECTIVE DATE: August 5, 1980.

FOR FURTHER INFORMATION CONTACT: Stanley J. Kieszkiel, Acting Instructions Officer, Immigration and Naturalization Service, 425 Eye Street, NW., Washington, D.C. 20536. Telephone: (202) 633–3048.

SUPPLEMENTARY INFORMATION: In order to include reference to the Alien Registration Receipt Card now issued on Form I-551, the following amendments are hereby prescribed to Chapter I of Title 8 of the Code of Federal Regulations:

§ 264.1 [Amended]

In § 264.1 paragraphs (f) and (g) are amended by changing all references to "I-151" to read "I-551".

* * * * *

(Sec. 103, 221, 261–265 (8 U.S.C. 1103, 1201, 1301–1305))

These amendments are published pursuant to section 552 of Title 5 of the United States Code (80 Stat. 3838), as amended by Pub. L. 93-502 (88 Stat. 1561), and the authority contained in

section 103 of the Immigration and Nationality Act (8 U.S.C. 1103), 28 CFR 0.105(b), and 8 CFR 2.1. Compliance with the provisions of section 553 of Title 5 of the United States Code as to notice of proposed rule making and delayed effective date is unnecessary in this instance because the amendments contained in this order are editorial in nature, and up-date Service practice and procedure regarding the new Alien Registration Receipt Card in current use.

Effective date. These amendments become effective on August 5, 1980.

Dated: July 30, 1980.

David Crosland,

Acting Commissioner of Immigration and Naturalization.

[FR Doc. 80-23635 Filed 8-5-80; 8:45 am]

BILLING CODE 4410-10-M

FEDERAL RESERVE SYSTEM

12 CFR Part 201

Changes in Discount Rates

AGENCY: Board of Governors of the Federal Reserve System.

ACTION: Final rule.

SUMMARY: The Board of Governors has amended its Regulation A, "Extensions of Credit By Federal Reserve Banks," for the purpose of adjusting discount rates with a view to accommodating commerce and business in accordance with other related rates and the general credit situation of the country.

EFFECTIVE DATE: The changes were effective on the dates specified below.

FOR FURTHER INFORMATION CONTACT: Theodore E. Allison, Secretary, Board of Governors of the Federal Reserve System, Washington, D.C. 20551 (202/452-3257).

SUPPLMENTARY INFORMATION: Pursuant to the authority of 5 U.S.C. Sec. 553 (b)(3)(B) and (d)(3), these amendments are being published without prior general notice of proposed rulemaking, public participation, or deferred effective date. The Board has for good cause found that current economic and financial considerations required that these amendments must be adopted immediately.

Pursuant to section 14(d) of the Federal Reserve Act (12 U.S.C. 357), Part 201 is amended as set forth below:

1. Section 201.51 is revised to read as follows:

§ 201.51 Advances and discounts for member banks under sections 13 and 13a.

The rates for all advances and discounts under sections 13 and 13a of the Federal Reserve Act (except advances under the last paragraph of such section 13 to individuals, partnerships, or corporations other than member banks) are:

Federal Reserve Bank of	Rate	Effective
Boston	10	July 29, 1980.
New York	10	July 28, 1980.
Philadelphia	10	July 29, 1980.
Cleveland	10	July 28, 1980.
Richmond	10	July 28, 1980.
Atlanta	10	July 28, 1980.
Chicago	10	July 28, 1980.
St. Louis	10	July 28, 1980.
Minneapolis	10	July 28, 1980.
Kansas City	10	July 28, 1980.
Dallas	10	July 28, 1980.
San Francisco	10	July 28, 1980.

2. Section 201.52 is revised to read as follows:

§ 201.52 Advances to member banks under section 10(b).

(a) The rates for advances to member banks under section 10(b) of the Federal Reserve Act are:

Federal Reserve Bank of	Rate	Effective
Boston	10½	July 29, 1980.
New York	10½	July 28, 1980.
Philadelphia	10½	July 29, 1980.
Cleveland	10½	July 28, 1980.
Richmond	10½	July 28, 1980.
Atlanta	10½	July 28, 1980.
Chicago	10½	July 28, 1980.
St. Louis	10½	July 28, 1980.
Minneapolis	10½	July 28, 1980.
Kansas City	10½	July 28, 1980.
Dallas	10½	July 28, 1980.
San Francisco	10½	July 28, 1980.

(b) The rates for advances to member banks for prolonged periods and significant amounts under section 10(b) of the Federal Reserve Act and § 201.2(e)(2) of Regulation A are:

Federal Reserve Bank of	Rate	Effective
Boston	11	July 29, 1980.
New York	11	July 28, 1980.
Philadelphia	11	July 29, 1980.
Cleveland	11	July 28, 1980.
Richmond	11	July 28, 1980.
Atlanta	11	July 28, 1980.
Chicago	11	July 28, 1980.
St. Louis	11	July 28, 1980.
Minneapolis	11	July 28, 1980.
Kansas City	11	July 28, 1980.
Dallas	11	July 28, 1980.
San Francisco	11	July 28, 1980.

3. Section 201.53 is revised to read as follows:

§ 201.53 Advances to persons other than member banks.

The rates for advances under the last paragraph of section 13 of the Federal Reserve Act to individuals, partnerships, or corporations other than member banks secured by direct obligations of, or obligations fully guaranteed as to principal and interest by, the United States or any agency thereof are:

Federal Reserve Bank of	Rate	Effective
Boston	13	July 29, 1980.
New York	13	July 28, 1980.
Philadelphia	13	July 29, 1980.
Cleveland	13	July 28, 1980.
Richmond	13	July 28, 1980.
Atlanta	13	July 28, 1980.
Chicago	13	July 28, 1980.
St. Louis	13	July 28, 1980.
Minneapolis	13	July 28, 1980.
Kansas City	13	July 28, 1980.
Dallas	13	July 28, 1980.
San Francisco	13	July 28, 1980.

(12 U.S.C. 248(i). Interprets or applies 12 U.S.C. 357)

By order of the Board of Governors, July 30, 1980.

Griffith L. Garwood,

Deputy Secretary of the Board.

[FR Doc. 80-23636 Filed 8-5-80; 8:45 am]

BILLING CODE 6210-01-M

DEPARTMENT OF HOUSING AND URBAN DEVELOPMENT

Office of Interstate Land Sales Registration

24 CFR Part 1710

[Docket No. R-80-778]

Land Registration, Purchaser's Revocation Rights, Sales Practices and Standards, and Formal Procedures and Rules of Practice

Correction

In the correction to FR Doc. 80-17871 appearing on page 50735 in the issue of Thursday, July 31, 1980, change item (1) now reading

"(1) On page 40487, first column, the paragraph beginning with Exemption Notice, "Dil SR No" should be corrected to read "DILSR No"."

to read as follows:

(1) On page 40487, first column, in paragraph (4) of § 1710.15(c), in the paragraph designated Exemption Notice, "Oil SR No" should have read "OILSR No".

BILLING CODE 1505-01-M

DEPARTMENT OF JUSTICE

Office of the Attorney General

28 CFR Part 0

[Order No. 905-80]

Delegation of Authority To Approve Certain Expenditures of the U.S. Marshals Service

AGENCY: Department of Justice.

ACTION: Final rule.

SUMMARY: Title 28, United States Code, Section 567, provides that, under regulations prescribed by the Attorney General, each United States Marshal shall be allowed: (1) his actual and necessary office expenses; (2) the expense of transporting prisoners, including the cost of necessary guards and the travel and subsistence expense of prisoners and guards; and (3) other necessary expenditures in the line of duty, approved by the Attorney General. This order delegates the authority to approve "other necessary expenditures in the line of duty" to the Director, United States Marshals Service.

EFFECTIVE DATE: July 28, 1980.

FOR FURTHER INFORMATION CONTACT: Gilbert Leigh, Director, Finance Staff, Justice Management Division, Department of Justice, Washington, D.C. 20530 (202-633-2728).

By virtue of the authority vested in me by 28 U.S.C. §§ 509, 510 and 567, and 5 U.S.C. § 301, Title 28, Code of Federal Regulations is amended as follows:

PART 0—ORGANIZATION OF THE DEPARTMENT

1. A new subsection (p), to read as follows, is added to § 0.111:

§ 0.111 General functions.

* * * * *

(p) Approval of "other necessary expenditures in the line of duty" of U.S. Marshals and Deputy U.S. Marshals under 28 U.S.C. 567(3).

2. Section 0.113 is amended to read as follows:

§ 0.113 Redelegation of authority.

The Director, U.S. Marshals Service, is authorized to redelegate to any of his subordinates any of the powers and functions vested in him by this subpart, except that the authority to approve "other necessary expenditures in the line of duty" of U.S. Marshals and Deputy U.S. Marshals may not be delegated below the Assistant Director level.

Dated: July 28, 1980.

Benjamin R. Civiletti,

Attorney General.

[FR Doc. 80-23629 Filed 8-5-80; 8:45 am]

BILLING CODE 4410-01-M

28 CFR Part 0

[Order No. 906-80]

Establishment of the Office of Small and Disadvantaged Business Utilization in the Department of Justice

AGENCY: Department of Justice.

ACTION: Final rule.

SUMMARY: The Small Business Investment Act was amended in 1978. Among other things, the 1978 amendment established in each Federal agency having procurement powers an office to be known as the "Office of Small and disadvantaged Business Utilization;" (OSDBU). This order attaches the Department of Justice OSDBU to the Office of the Deputy Attorney General and assigns certain responsibilities to the Director of that office.

EFFECTIVE DATE: September 5, 1980.

FOR FURTHER INFORMATION CONTACT: William J. Snider, Administrative Counsel, Justice Management Division, Department of Justice, Washington, D.C. 20530 ((202) 633-3452).

By virtue of the authority vested in me by 28 U.S.C. 509 and 510 and 15 U.S.C. 644(k), it is hereby ordered as follows:

PART 0—ORGANIZATION OF THE DEPARTMENT

Subpart C of Part 0 of Chapter I, 28 Code of Federal Regulations, is amended by adding the following § 0.18a.

§ 0.18a Office of Small and Disadvantaged Business Utilization.

The Office of Small and Disadvantaged Business Utilization is headed by a Director appointed by the Attorney General, who shall be responsible to, and report directly to, the Deputy Attorney General. Subject to the general supervision and direction of the Deputy Attorney General, the Director shall:

(a) Be responsible for the implementation and execution of the functions and duties required by sections 637 and 644 of Title 15, United States Code;

(b) Establish Department goals for the participation by small businesses, including small businesses owned and controlled by socially and economically disadvantaged individuals, in Department procurement contracts;

(c) Have supervisory authority over Department personnel to the extent that the functions and duties of such personnel relate to the functions and duties described in paragraph (a) of this section;

(d) Provide resource information and technical training and assistance regarding utilization of small businesses, including small businesses owned and controlled by socially and economically disadvantaged individuals, to Department personnel who perform procurement functions;

(e) Assign a small business technical adviser to any Department offices to which the Small Business Administration assigns a procurement center representative, in accordance with section 644(k)(6) of Title 15, United States Code;

(f) Develop and implement appropriate outreach programs to include small minority businesses in procurement contracts;

(g) Cooperate and consult regularly with the Small Business Administration with respect to the functions and duties described in paragraph (a) of this section;

(h) Review, evaluate and report to the Deputy Attorney General on the performance of organizational units of the Department in accomplishing the goals for utilization of small and disadvantaged businesses; and

(i) Prepare the Department's annual report to the Small Business Administration on the extent of participation by small and disadvantaged businesses in Department procurement contracts.

Dated: July 30, 1980.

Benjamin R. Civiletti,

Attorney General.

[FR Doc. 80-23631 Filed 8-5-80; 8:45 am]

BILLING CODE 4410-01-M

DEPARTMENT OF DEFENSE

Department of the Air Force

32 CFR Part 888d

Military Personnel; Enlistment and Discharge of AFROTC Cadets

AGENCY: Department of the Air Force, DOD.

ACTION: Final rule.

SUMMARY: The Department of the Air Force is amending its regulations by revising Part 888d, Enlistment and Discharge of AFROTC Cadets. This revision clarifies the enlistment

requirements for students selected for membership in the College Scholarship Program (CSP) and the Professional Officer Course (POC), AFROTC; prescribes the policies and procedures for enlistment in and discharge from the United States Air Force Reserve (USAFR); and for ordering certain discontinued members to extended active duty (EAD) involuntarily in their enlisted grade. It implements DOD Directives 1215.8, May 1, 1974; 1215.9, November 7, 1969; and Change 1, July 10, 1970.

EFFECTIVE DATE: July 15, 1976.

FOR FURTHER INFORMATION CONTACT: Major Herbert L. Treger, telephone (202) 695-0318.

Title 32 of the Code of Federal Regulations is amended by revising Part 888d to read as follows:

PART 888d—ENLISTMENT AND DISCHARGE OF AFROTC CADETS

Sec.

888d.1 Purpose.
888d.2 Terms explained.
888d.3 Enlistment obligations.
888d.4 Enlistment prerequisites.
888d.5 Periods of enlistment.
888d.6 Who enlists applicants.
888d.7 Action at time of enlistment.
888d.8 Failure to complete training or accept commission.
888d.9 Basis for discharge.
888d.10 Reporting cadets for discharge or order to EAD.
888d.11 ARPC actions on cadets reported for EAD in their enlisted grade.

Authority: 10 U.S.C. 8012.

Note.—This part is derived from Air Force Regulation 45-14, July 15, 1976.

Note.—Part 806 of this chapter states the basic policies and instructions governing the disclosure of records and tells the members of the public what they must do to inspect or obtain copies of the material referenced herein.

§ 888d.1 Purpose.

This part prescribes enlistment requirements for students selected for membership in the College Scholarship Program (CSP) and the Professional Officer Course (POC), AFROTC, under 10 U.S.C. Sections 2101 through 2111. It also prescribes the policies and procedures for enlistment in the United States Air Force Reserve (USAFR); for discharge from the USAFR; and for ordering certain discontinued members to extended active duty (EAD) involuntarily in their enlisted grade.

Note.—This part is affected by the Privacy Act of 1974. Each form which is required by this part contains a Privacy Act Statement, either incorporated in the body of the document or in a separate statement accompanying each such document.

§ 888d.2 Terms explained.

(a) *AF Form 1056, Air Force Reserve Officers' Training Corps Contract.* A contractual agreement jointly executed by the Department of the Air Force and a student programmed to serve on EAD. The agreement establishes membership in the CSP or POC. Part 870 of this chapter is the prescribing directive for this form.

(b) *AF Form 1448, Air Force Reserve Officers' Training Corps Contract (Air National Guard/Air Force Reserve).* A contract jointly executed by the Department of the Air Force and a student programmed for service in the Air National Guard/Air Force Reserve. This contract establishes membership in the POC. Part 870 of this chapter is the prescribing directive for this form.

(c) *College Scholarship Program (CSP).* A program in which selected cadets receive educational financial assistance including normal tuition, fees, laboratory expenses, books, and a monthly subsistence allowance. This program is prescribed under 10 U.S.C. 2107.

(d) *Extended Active Duty (EAD).* A tour of active duty (AD), normally for more than 90 days, performed by a member of the Air National Guard of the United States (ANGUS) or the USAFR. Strength accountability for persons on EAD changes from the ANGUS/USAFR to the active force.

(e) *General Military Course (GMC).* The first and second years of the 4-year program consisting of Aerospace Studies 100 and 200.

(f) *Prior Service Applicant.* A former member of the Armed Forces or the Reserve components of the Armed Forces who served a continuous period of AD, EAD, or active duty for training (ADT) of 6 months or more.

(g) *Professional Officer Course (POC).* The third and fourth years of the 4-year program and the first and second years of the 2-year program consisting of Aerospace Studies 300 and 400. This advanced training is prescribed under 10 U.S.C. 2104.

§ 888d.3 Enlistment obligation.

Each student selected for a scholarship award by the Commandant, AFROTC, or selected for POC membership must enlist in the USAFR under this part before being eligible to enroll as a member of the POC or CSP.

§ 888d.4 Enlistment prerequisites.

An applicant must meet the prerequisites for enlistment prescribed in Part 888 of this chapter and the eligibility requirements for admission to membership in the POC or CSP according to Part 870 of this chapter.

§ 888d.5 Periods of enlistment.

Applicants enrolled in the CSP are enlisted for a period of 8 years. All others are enlisted for a period of 6 years. However, nonscholarship cadets enlisted for a period of 6 years need not change their period of enlistment if they are subsequently granted scholarships.

§ 888d.6 Who enlists applicants.

Detachment Commanders and other officers assigned to AFROTC may enlist an eligible applicant in the USAFR.

§ 888d.7 Action at time of enlistment.

The enlistment authority:

(a) Completes counseling requirements according to Parts 888 and 870 of this chapter.

(b) Ensures that enlistment documents and forms are prepared according to Part 888 of this chapter.

(1) AF Form 22, Statement of Understanding (US Air Force Reserve), or AF Form 73, Statement of Understanding (AFROTC Airmen Scholarship and Commissioning Program), or AF Form 1404, Statement of Understanding (AFROTC Production for ANGUS and USAFR). Each student enlisted under this part must certify that the applicable provisions are understood.

(2) DD Form 4, Enlistment or Reenlistment Agreement—Armed Forces of the United States, and DD Form 1966, Application for Enlistment Armed Forces of the United States. Prepare according to Part 888 of this chapter.

Note.—A cadet discontinued from AFROTC membership and discharged from the USAFR obligated reserve section (ORS) may apply for enlistment or reenlistment. If eligible for enlistment in the Regular Air Force under Part 888 of this chapter, or reenlistment in the USAFR under AFR 35-10, volume II, cadet service with concurrent Reserve status is creditable in computing basic pay and is creditable toward completing the enlisted member's military service obligation (MSO).

(3) AF Form 2061, USAF Drug Abuse Certificate (Appointment/Officer Training Applicants Only). Before enlistment, applicant completes AF Form 2061 according to Part 870 of this chapter.

(4) AF Form 2031, Drug Abuse Circumstances (Instructions to Recruiter). Accomplish AF Form 2031 according to Part 870 of this chapter.

(c) Ensures that an applicant who is a member of any military component, including the USAFR, on entrance into this program, is discharged and enlisted. Discharge is contingent on immediate enlistment under this part and orders must cite this fact.

(d) Determines the grade in which applicant must be enlisted.

(e) Publishes Reserve order according to AFR 10-7, chapter 3, assigning enlistee to the Air Reserve Personnel Center (ARPC) (ORS-RC) (AFROTC) with attachment to
(Specify AFROTC detachment and educational institution.)

Exception.—The appropriate Detachment Commander publishes Reserve orders on receipt of enlistment documents from the AD enlisting activity for members enlisted in the USAFR to participate in the AFROTC ASCP.

§ 888d.8 Failure to complete training or accept commission.

(a) *General Military Course (CSP).* No GMC cadet will be ordered to AD involuntarily, except former Regular Air Force enlisted personnel who had 1 year or more remaining on their enlistment contract when discharged from AD to accept an AFROTC scholarship under the AFROTC ASCP. These members normally will be ordered to AD in enlisted status for a period of time equivalent to that not served on their AD enlistment contract.

(b) *POC (Nonscholarship).* A cadet who does not complete the course of instruction, or declines to accept a commission on completion, normally will be ordered to AD to serve in enlisted status for 2 years.

(c) *POC (College Scholarship Program).* A cadet who:

(1) Does not complete this program of instruction normally will be ordered to AD in enlisted status for 2 years; or

(2) Completes this program of instruction but declines a commission when offered, normally will be ordered to AD in enlisted status for 4 years.

(d) *Nurse Licensing Requirements.* A nurse who fails to complete licensing requirements within 8 months following completion of AFROTC and degree requirements normally will be discharged.

§ 888d.9 Basis for discharge.

Discharge is accomplished by ARPC on:

(a) Successful completion of the AFROTC program and acceptance of a commission. The discharge is:

(1) Effective the day preceding acceptance of the commission.

(2) For the convenience of the Government, citing this subparagraph as authority.

(b) Discontinuance of AFROTC membership for any reason unless reported for order to AD involuntarily under § 888d.10. A request for discharge must be accompanied by DD Form 785, Record of Disenrollment From Officer Candidate-Type Training, for permanent inclusion in the cadet's master personnel record (MPerR) group. Discharge for any of the reasons cited in AFR 35-41, volume III, chapter 5, paragraphs 5-20 through 5-22 and 5-31 through 5-36, is instituted when applicable. All other discharges are for the convenience of the Government, citing this subparagraph as authority.

(c) Termination of a scholarship when the student remains a member of the GMC or has completed GMC instruction, but has not begun POC instruction. Discharge occurs the day of scholarship termination and is for the convenience of the Government, citing this subparagraph as authority.

Note.—Discharge under §§ 888d.9(b) and 888d.9(c) does not relieve a male cadet from draft liability under the Military Selective Service Act of 1967.

§ 888d.10 Reporting cadets for discharge or order to EAD.

(a) The Commandant, AFROTC, reports the names of AFROTC cadets or former cadets who qualify for administrative discharge under this part to ARPC at least once a week. ARPC notifies the respective State Adjutant General of individuals under contractual agreement to the ANGUS who are eliminated from training.

(b) The Commandant, AFROTC, normally will report the name of a discontinued POC cadet to ARPC for order to involuntary AD in enlisted grade if the cadet was discontinued for indifference to training, disciplinary reasons, breach or anticipatory breach of the terms of the category agreement, or declining to accept a commission. However, each case will be considered on its own merits. This does not preclude waiving active enlisted service for physical disqualification, humanitarian reasons, the needs of the service, or other mitigating circumstances. When it is known that the cadet has disenrolled from the institution, this information is included. The period of involuntary AD is as described in § 888d.8. DD Form 785 must be completed and sent to ARPC with an information copy to AFMPC/DPMMPO, Randolph AFB TX 78148, in these cases.

(c) The Commandant, AFROTC, normally reports the name of a discontinued GMC or POC cadet to ARPC for order to involuntary AD in enlisted grade if the cadet was discharged from AD under the AFROTC ASCP to participate in the CSP and was discontinued for any reason except as outlined below. (This does not include a GMC cadet who had less than 1 year remaining on his or her Regular enlistment contract at time of discharge. Such a GMC cadet is reported for discharge under paragraph (a) of this section). The period of AD will be as described in § 888d.8. DD Form 785 must be completed and sent to ARPC with an information copy to AFMPC/DPMMPO in these cases. Although the Commandant, AFROTC, may include other unique cases on an individual basis, exceptions normally will be limited to those:

(1) Who have failed to maintain medical qualifications for commissioning;

(2) With a bona fide hardship (as determined by the Commandant, AFROTC);

(3) Who voluntarily enlist in the Regular Air Force;

(4) Discontinued for inaptitude or reasons involving undesirable traits of character; or

(5) Whose order to involuntary AD would not be in the best interest of the service.

§ 888d.11 ARPC actions on cadets reported for EAD in their enlisted grade.

(a) On notification from the Commandant, AFROTC, that discontinued cadets have been identified for order to EAD involuntarily in their enlisted grade, ARPC advises the discontinued cadets that they:

(1) Will be ordered to EAD involuntarily in their enlisted grade for the period prescribed in § 888d.8 except that:

(i) Discontinued cadets are not ordered to EAD until they complete undergraduate degree requirements or disenroll from the institution, whichever occurs first. Discontinued ASCP cadets are ordered to EAD at the end of the school term in which they are disenrolled. Discontinued cadets enrolled in graduate school are not ordered to EAC until they complete the academic year in which they are disenrolled or disenroll from the institution, whichever occurs first;

(ii) Individuals usually are given at least 60 days' notification before their EAD date; and

(iii) When ARPC notification permits, students are entered on EAD within 30 days after the date they normally would complete degree requirements or their current academic year of graduate school, as appropriate. When ARPC notification occurs after a disenrolled cadet has completed degree requirements, disenrolled from college, or is a graduate student between academic years, EAD is scheduled no later than 75 days after ARPC notification. A cadet may submit a written request to ARPC for an earlier or specific date of entry on EAD.

(2) Must keep ARPC informed of any change in current address or in their status which may have a bearing on their availability for EAD or affect their status in the USAFR.

(b) ARPC publishes appropriate orders not less than 30 days before scheduled EAD date and sends copies to the discontinued cadet by registered mail, return receipt requested.

(c) Exceptions to the provisions of this section require approval of AFMPC/DPMMPO, Randolph AFB TX 78148.

Carol M. Rose,

Air Force Federal Register Liaison Officer.

[FR Doc. 80-23632 Filed 8-5-80; 8:45 am]

BILLING CODE 3910-01-M

ENVIRONMENTAL PROTECTION AGENCY

40 CFR Part 52

[FRL 1562-1]

Approval and Promulgation of State Implementation Plan Approval of Conditionally Approved Element in the Texas Plan for Nonattainment Areas

AGENCY: Environmental Protection Agency (EPA).

ACTION: Final rulemaking.

SUMMARY: The purpose of this notice is to approve that portion of the State Implementation Plan (SIP) revision for Texas, which commits to the identification and implementation of currently planned transportation control measures (TCMs) for Harris County. This revision was submitted by the Governor on December 28, 1979, to fulfill the requirements of Part D of Title 1 of the Clean Air Act, as amended in 1977, with regard to nonattainment areas.

When originally submitted certain portions of the SIP contained deficiencies which the State agreed to correct by a specified deadline. The deadline proposed by EPA in the rulemaking notice of August 1, 1979 was October 29, 1979. During the public comment period the State requested a new deadline of December 31, 1979. EPA concurred with this date and it was approved in the final rulemaking notice of March 25, 1980. The EPA received the required documentation on December 28, 1979 from the State and has evaluated the submittal. Based upon the approvable submittal, EPA has determined that the State has satisfied the condition specified in the March 25, 1980 notice and therefore is approving this element of the Texas SIP.

EFFECTIVE DATE: Effective August 6, 1980.

FOR FURTHER INFORMATION CONTACT: Jerry Stubberfield, Chief, Implementation Plan Section, Air and Hazardous Materials Division, Environmental Protection Agency, Region 6, 1201 Elm Street, Dallas, Texas 75270, (214) 767-1518.

SUPPLEMENTARY INFORMATION:

Introduction

On August 1, 1979 (44 FR 45204), EPA published a notice of proposed rulemaking on revisions to the Texas SIP. Under that notice the Agency discussed the SIP in detail and described the deficiencies of the SIP pursuant to Part D of the Act and the General Preamble, which was published in the April 4, 1979 issue of the Federal Register (at 44 FR 20372) and supplemented on July 2, 1979 (44 FR 38583), August 28, 1979 (44 FR 50371), September 17, 1979 (44 FR 53761), and November 23, 1979 (44 FR 67182).

The July 2, 1979 supplement to the April 4, 1979 notice outlines the criteria for conditional approval. This discussion will not be restated in this notice.

In a notice of proposed rulemaking published in the Federal Register on August 1, 1979 EPA conditionally approved the transportation control measures portion of the Texas SIP provided the State commit to identify and implement TCMs for Harris County having beneficial air quality impacts.

Based upon discussions with the TACB and EPA the State committed to a conditional approval deadline of December 31, 1979. This date was approved in the final rulemaking notice of March 25, 1980.

On December 28, 1979 the State submitted to EPA under the signature of the Governor, their Plans for Implementation of Air Quality Related Transportation Control Measures for Harris County. The currently planned Transportation Control Measures committed to by local elected officials and having positive air quality impacts include two permanent park and ride lots and three long term lease lots that have a total capacity of 2650 parking spaces. In addition, the Metropolitan Transit Authority committed to continuation of the Houston Car Share (car-pooling) program.

These measures (i.e., park and ride programs and carpool programs) are considered by EPA to be acceptable TCMs and EPA feels that this submittal satisfies the condition specified in the March 25, 1980 notice. Therefore, EPA is withdrawing conditional approval, and is fully approving this portion of the SIP.

PUBLIC COMMENTS: The public was given the opportunity to comment on the substance and schedules of the conditionally approved items in the proposed rulemaking of August 1, 1979, 44 FR 45204. The public had no comments specific to the currently planned TCMs for Harris County but other comments received on the Texas SIP were discussed in the March 25, 1980 Notice of Final Rulemaking.

Under Executive Order 12044, EPA is required to judge whether a regulation is "significant" and therefore subjected to the procedural requirements of the Order or whether it may follow other specified development procedures. EPA labels these other regulations "specialized". I have reviewed this regulation and determined that it is a specialized regulation not subject to the procedural requirements of Executive Order 12044.

This notice of final rulemaking is issued under the authority of Section 110 of the Clean Air Act, as amended.

EPA finds that good cause exists for making this package immediately effective: (1) Implementation Plans are already in effect under State law and EPA approval imposes no additional regulatory burden;

(2) EPA has a responsibility under the Act to take final action as soon as possible on the portion of the SIP which were given conditional approval regarding Part D Requirements.

Dated: July 24, 1980.

Douglas M. Costle,

Administrator.

Part 52 of Chapter I, Title 40 of the Code of Federal Regulations is amended as follows:

Subpart SS—Texas

1. In § 52.2270, paragraph (c) is amended by adding a new paragraph (24) as follows.

§ 52.2270 Identification of plan.

* * * * *

(c) * * *

(24) A revision identifying and committing to implement currently planned Transportation Control Measures (TCMs) for Harris County was submitted by the Governor on December 28, 1979.

2. § 52.2791 is revoked and reserved.

§ 52.2791 [Reserved]

[FR Doc. 80-23498 Filed 8-5-80; 8:45 am]

BILLING CODE 6560-01-M

40 CFR Part 122

[FRL 1557-4]

Consolidated Permit Regulations; Signatories To Permit Applications and Reports; Statement of Policy Regarding Signatory and Certification Provisions

AGENCY: Environmental Protection Agency.

ACTION: Statement of policy.

SUMMARY: This policy statement is in response to several industry requests for clarification of certain terms contained in the signatory and certification provisions of 40 CFR 122.6. This policy statement does not change the meaning of the Consolidated Permit Regulations in anyway, but clarifies 1. the requirement of which corporate official must sign permit applications, 2. requirements for signers to have "personally examined" and be "familiar" with the information submitted, and 3. the requirement that the signer make "inquiry of those individuals immediately responsible for obtaining the information."

DATES: This Statement of Policy becomes effective August 6, 1980.

FOR FURTHER INFORMATION CONTACT: Beth Osheim, Office of Water Enforcement (EN-336), U.S. Environmental Protection Agency, Washington, D.C. 20460 (202) 426-4793.

SUPPLEMENTARY INFORMATION: The promulgation of the consolidated permit regulations in 45 FR 33290 (May 19, 1980), resulted in numerous inquiries from industry representatives who were having difficulty understanding certain terms used in the signature requirement and certification for permit applications and reports submitted by corporations found in 40 CFR 122.6(a)(1) and (d). We are setting forth this statement of policy to respond to these inquiries and to inform the public of our interpretation of these requirements. This statement of policy does not change the regulation in any way.

POLICY STATEMENT: The requirement that the signer of a permit application submitted by a corporation be a "principal executive officer of at least the level of vice-president" means that the signer must be a president, secretary, treasurer, or any vice-president of the corporation in charge of a principal business function. Any other person who performs similar policy-making functions for the corporation falls within the meaning of this phrase. For example, in cases of very large corporations having many divisions which are not separate corporate entities, the signature of a divisional vice-president or executive officer with such policy-making functions satisfies this requirement even though the divisional vice-president or executive officer technically is not a vice-president or executive officer of the corporation. The signature of the manager for the plan for which the application is being submitted will not satisfy this requirement unless that person is a principal executive officer of at least the level of vice-presient or performs similar policy-making functions for the corporation.

The requirement that the signer of a permit application or other report have "personally examined" and be "familiar" with the information submitted means that the signer must have read the document. The signer must sufficiently comprehend the information contained in the document and its regulatory consequences to enable him or her to make a reasonable inquiry as to the truth, accuracy, and completeness of the information.

To comprehend the regulatory consequences of an NPDES permit application would include, for example, understanding that the information submitted, such as the description of the plant, its processes, and the nature and quantity of pollutants being discharged, will form the basis for determining the effluent limitations, monitoring requirements, notification levels, and other conditions to be established in the NPDES permit.

The requirement that the signer make "inquiry of those individuals immediately responsible for obtaining the information" means that he or she must make a good faith effort to ascertain whether or not the information submitted complies with the requirements of this section. The inquiry must provide the signer with a reasonable basis to believe that the information submitted is true, accurate, and complete. Because the nature and extent of the inquiry required will vary on a case-by-case basis, it would be impossible for the Agency to specify necessary steps here. In general, however, the signer at least must inquire of the person or persons who supervised the collection of the information. These persons must be able to supply the information necessary to ascertain the truth, accuracy, and completeness of the information being submitted. If inquiry of these supervisors is insufficient to provide a reasonable basis to believe that the information is true, accurate, and complete, the signer must make further inquiry as necessary to establish that basis before signing the document.

Dated: July 28, 1980.

Jeffrey G. Miller,

Acting Assistant Administrator for Enforcement.

Dated: July 29, 1980.

Michele Beigel Corash,

General Counsel.

[FR Doc. 80-23741 Filed 8-5-80; 8:45 am]

BILLING CODE 6560-01-M

FEDERAL COMMUNICATIONS COMMISSION

47 CFR Part 22

[FCC 80-450]

Making Clear That Applicants at the Time of Filing Applications in the Domestic Public Land Mobile Radio Service Must Demonstrate Interference-Free Operation

AGENCY: Federal Communications Commission.

ACTION: Final rule.

SUMMARY: The Federal Communications Commission amends its regulations to require that applicants for base station facilities in the Domestic Public Land Mobile Radio Service, at the time their applications are tendered for filing, must explicitly state whether there are any co-channel facilities within a specified distance and, if so, must submit interference studies which demonstrate that their proposed facilities will not cause co-channel electrical harmful interference.

EFFECTIVE DATE: September 8, 1980.

ADDRESSES: Federal Communications Commission, Washington, DC 20554.

FOR FURTHER INFORMATION CONTACT: Charles Jay Isemen, Common Carrier Bureau, (202) 632-6450.

SUPPLEMENTARY INFORMATION: In the matter of amendment of Part 22 of the Commission's rules to make clear that applicants at the time of filing applications in the Domestic Public Land Mobile Radio Service must demonstrate interference-free operation.

Memorandum Opinion and Order

Adopted: July 23, 1980.

Released: July 30, 1980.

1. In the Domestic Public Land Mobile Radio Service (DPLMRS), processing is often delayed because many applications do not contain interference studies that the staff needs in order to determine whether the proposed facilities will cause harmful electrical interference to existing stations. We have reviewed our existing rules that

require applicants for base station facilities in the DPLMRS to demonstrate interference-free operation and have concluded that interference-free operation should be demonstrated at the time an application is tendered for filing. The changes we are making in our rules make it clear that such information must be submitted at the time an application is filed rather than withheld until the Commission specifically requests the information.

2. The interrelationship of §§ 22.15, 22.100(a), 22.502, 22.503, and 22.504, of the rules establishes the requirement that applicants for base station facilities in the DPLMRS demonstrate interference-free operation. Section 22.15 requires applications to "contain all technical information required by the application form and any additional information necessary to fully describe the proposed construction and to demonstrate compliance with all technical requirements of the rules * * *." 47 CFR § 22.15 Section 22.100(a) of the rules states that assignment of frequencies will be made only in such a manner as to facilitate the rendition of communications service on an interference-free basis in each service area. 47 CFR § 22.100(a). Section 22.504(a) of the rules defines the reliable service area of a base station entitled to protection from co-channel electrical harmful interference. 47 CFR § 22.504. As a guideline in making frequency assignments that will permit interference-free operation, § 22.502 and 2.503 classify co-channel stations by antenna height above average terrain and effective radiated power and establish the minimum mileage separation that normally will be required. 47 CFR 22.502 and 22.503. To aid the Commission staff in assuring that frequencies are assigned on an interference-free basis, FCC Form 401, Item 26, requires applicants to disclose the average elevation of radial in feet above mean sea level, the height of antenna radiation center in feet above elevation of radial, and the effective radiated power in radial direction, for those radials that are in the direction of a co-channel station within seventy-five miles.[1] It has been our practice to require applicants to submit interference studies demonstrating interference-free operation with all existing co-channel stations within seventy-five miles and with those proposed co-channel stations within seventy-five miles with which the application is "cut off" from comparative consideration by the provisions of § 22.31 of the Commission's rules, 47 CFR 22.31. Whenever interference studies have not been submitted with such applications, our staff has had to spend considerable time and effort in writing letters to the applicants requesting them to submit the information. Significant staff time and effort could be saved and the resultant processing delays could be substantially reduced if this information was provided at the time the application was submitted.[2] In the future, an application that does not contain the requisite interference studies would be subject to being returned as a defective application pursuant to § 22.20(a) of the rules, 47 CFR 22.20(a).

3. We are clarifying our rules to reflect existing practices and interpretations. We also wish to promote greater consistency in the information submitted by applicants. Accordingly, we are adding a new subsection (b) to § 22.15 of the Commission's rules, (technical content of applications) which will require applicants for base station facilities to explicitly state whether there are any co-channel facilities (whether existing or proposed by applications pending for more than 60 days from their public notice dates[3] within a specified distance and, if there are such facilities, to submit interference studies demonstrating that the applicant's proposed facilities will not cause harmful electrical interference to those facilities. The specified distance will be the minimum mileage separation established by §§ 22.502 and 22.503 whenever the application is for two-way base station facilities.[4] We realize that these minimum mileage separations establish a conservative estimate of the minimum mileage separation between co-channel stations when applied to one-way co-channel facilities. Consequently, we find that our present practice of requiring applicants for one-way facilities to identify co-channel facilities as far away as seventy-five miles is too burdensome in those cases where the table in § 22.503 indicates that the minimum milege separation is less than seventy-five miles. Accordingly we shall relax this burden and amend § 22.15(b) to require applicants for one-way base station facilities to explicitly state whether there are any protected co-channel facilities within seventy-five miles or the minimum mileage separation determined by applying the provisions of § 22.502 and the table shown in § 22.503(a), whichever is less, and if there are such facilities, to submit interference studies demonstrating that the proposed facilities will not cause harmful electrical interference to those facilities. We will not consider an application to be unacceptable for filing because it fails to identify applications for co-channel facilities that are pending for less than sixty days. In such cases, the Commission's staff may contact the applicant requesting the submission of appropriate interference studies.

4. In some cases, an applicant proposes operation where the average of the eight radials complies with the antenna height-power limit but the combination of effective radiated power and antenna height along a particular radial direction exceeds the limit that is computed by applying Section 22.505[5] in that direction. In these situations, our experience indicates that harmful electrical interference may be caused for a considerably greater distance. Consequently, we have been requiring applicants to explicitly state whether there are any protected co-channel facilities in that particular direction within 125 miles[6] and, if there are such facilities, to submit interference studies demonstrating that the proposed facilities will not cause harmful electrical interference to those facilities. Section 22.15(b) will also codify this requirement.

5. Authority for the adoption of the foregoing revisions is contained in Sections 4(i), 303(f), 303(r), 308(b), and 319(a) of the Communications act of 1934, as amended. 47 U.S.C. 154(i), 303(f), 303(r), 308(b) and 319(a).

6. In view of the fact that the amendments adopted herein are rules that clarify existing agency practice and procedure, prior publication of *Notice of Proposed Rule Making* under the provisions of Section 4 of the Administrative Procedure Act is unnecessary, and the amendments will become effective on

7. It is ordered, that effective September 8, 1980, § 22.15 of the

[1] If there are no co-channel stations within seventy-five miles, applicants must respond to this item and state explicitly that there are no such stations. *RAM Broadcasting of Indiana, Inc.*, 76 FCC 2d 364 (Com. Car. Bur. 1980); *See also Public Notice*, Mimeo 30894, released April 24, 1980, "Mobile Services Division Will Return Public Mobile Radio Service Applications Found To Be Defective."

[2] As we have stated on another occasion, it is the applicant's responsibility to conduct interference studies to determine whether its proposed service can be rendered on an interference-free basis. *Dial-A-Page, Inc.*, 75 FCC 2d 432, 439, 46 RR 2d 1239, 1245 (1980).

[3] Such co-channel facilities will hereinafter be referred to as "protected co-channel facilities."

[4] In order to determine the class of station pursuant to § 22.502 of the the rules, 47 CFR 22.502, both the antenna height above average terrain and effective radiated power must be computed along the particular radial between the co-channel stations.

[5] Section 22.505 of the rules 47 CFR 22.505.

[6] *See Empire Mobilcomm Systems, Inc.*, 73 FCC 2d 203 (Com. Car. Bur. 1979).

Commission's rules is amended as set forth in the attached Appendix below.

(Secs. 4, 303, 48 Stat., as amended, 1066, 1082; (47 U.S.C. 154, 303).)

Federal Communications Commission.

William J. Tricarico,

Secretary.

Appendix

Section 22.15(b), Title 47, of the Code of Federal Regulations (47 CFR 22.15(b)) is amended to read as follows:

§ 22.15 Technical content of applications.

* * * * *

(b) Each Domestic Public Land Mobile Radio Service application for a construction permit for a new base station or a major modification to an existing base station must:

(1) Explicitly state whether there are any co-channel facilities (whether existing or proposed by applications pending for more than 60 days from their public notice dates) within:

(i)(A) The minimum mileage separation established by §§ 22.502 and 22.503(a), if the application is for two-way communications facilities, or

(B) The lesser of 75 miles or the minimum mileage separation determined by applying the provisions of § 22.502 and the table shown in § 22.503(a), if the application is for one-way communications facilities;

(ii) 125 miles along any radial direction where the combination of effective radiated power in that direction and antenna height above average terrain in that direction exceeds the limit that is computed by applying the provisions of § 22.505 to that direction;

(2) Contain interference studies demonstrating that the proposed facilities will not cause harmful electrical interference to those co-channel facilities (existing or proposed) identified in response to subparagraph (1) of this paragraph. The interference studies must use procedures consistent with § 22.504 and FCC Report No. R-6406, "Technical Factors Affecting the Assignment Of Facilities In The Domestic Public Land Mobile Radio Service," by Roger B. Carey. All supporting data and calculations must be included with the results of the studies.

[FR Doc. 80-23639 Filed 8-5-80; 8:45 am]

BILLING CODE 6712-01-M

47 CFR Part 68

[Docket No. 20774]

Connection of Terminal Equipment to the Telephone Network

AGENCY: Federal Communications Commission.

ACTION: Final regulation.

SUMMARY: The FCC was notified by parties who were attempting to construct gauges in accordance with the dimensions of Figure 68.500(i)(4) that two dimensions were in error. The FCC is hereby correcting the errors which appear in Part 68 of the Commission's Rules and Regulations, published in the Federal Register July 12, 1976 at 41 FR 28694.

ADDRESSES: Federal Communications Commission, Washington, D.C. 20554.

FOR FURTHER INFORMATION CONTACT: William H. von Alven, Common Carrier Bureau, (202) 632-6440.

SUPPLEMENTARY INFORMATION:

Released: July 15, 1980.

1. Certain dimensional errors have been found in Figure 68.500(i)(4), entitled, "8 Position Keyed Plug Specification," which appears in Part 68 of the Commission's Rules and Regulations in the above-entitled matter, FCC 76-617, published in the Federal Register 7-12-76 at 41 FR 28694. See attachment for correction.

(Secs. 4, 303, 48 Stat., as amended, 1066, 1082; 47 U.S.C. 154, 303)

Federal Communications Commission.

William J. Tricarico,

Secretary

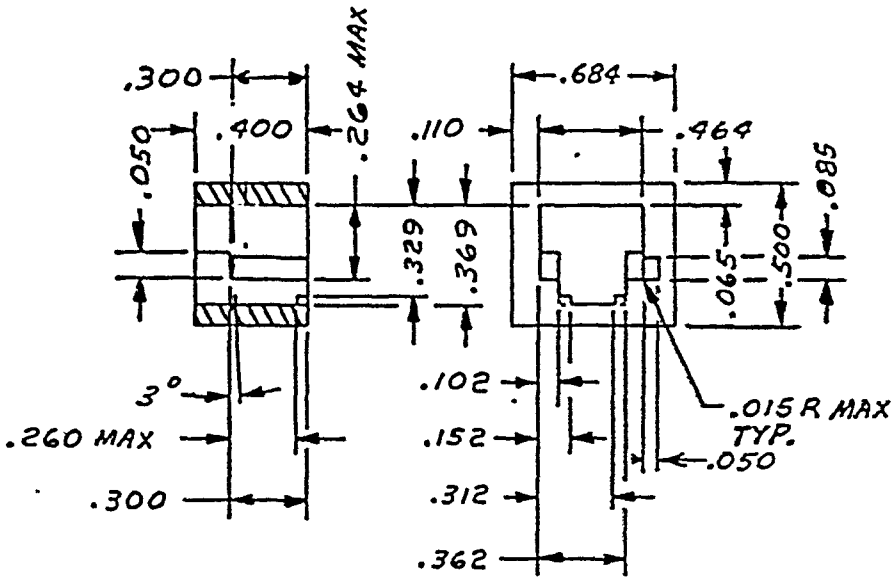

MAXIMUM CLEARANCE GAUGE

Figure 68.500(i)(4)--8 Position Keyed Plug Clearance Specification

[FR Doc 80-23775 Filed 8-5-80; 8 45 am]

BILLING CODE 6712-01-M

47 CFR Part 73

[BC Docket No. 80-143]

TV Broadcast Stations in Lansing and Saginaw, Mich.; Newark, Sandusky, and Toledo, Ohio; Changes Made in Table of Assignments

AGENCY: Federal Communications Commission.

ACTION: Final rule (Report and Order).

SUMMARY: As a result of a Notice of Proposed Rule Making, adopted on the Commission's own motion, this action substitutes Channel 47 for Channel 36 at Lansing, Michigan; Channel 49 for Channel 45 at Saginaw, Michigan; Channel 51 for Channel 52 at Newark, Ohio; Channel 52 for Channel 51 at Sandusky, Ohio; and Channel 36 for Channels 54 and 60 at Toledo, Ohio. This action will allow use of the 806–890 MHz band for land mobile operations in the United States-Canadian border area.

DATE: Effective September 10, 1980.

ADDRESSES: Federal Communications Commission, Washington, D.C. 20554.

FOR FURTHER INFORMATION CONTACT: Gordon W. Godfrey, Broadcast Bureau, (202) 632-9660.

SUPPLEMENTARY INFORMATION: In the matter of amendment of § 73.606(b), *Table of Assignments*, Television Broadcast Stations. (Lansing and Saginaw, Michigan; Newark, Sandusky and Toledo, Ohio), BC Docket No. 80-143. See 45 FR 28775, April 30, 1980.

Report and Order—Proceeding Terminated

Adopted: July 25, 1980.

Released: August 4, 1980.

1. The Commission has before it for consideration the *Notice of Proposed Rule Making*, adopted April 7, 1980, on the Commission's own motion. The *Notice* proposed the following changes in UHF television assignments:

City	Delete	Add
Lansing, Michigan	36	47
Saginaw, Michigan	45	49
Newark, Ohio	52	51
Sandusky, Ohio	51	52
Toledo, Ohio	54, 60	36

2. The only comment submitted in this proceeding was from Toledo Christian Broadcasting, Inc. ("TCB") in opposition to the proposed addition of Channel 36 and deletion of Channels 54 and 60 at Toledo. TCB states that it was incorporated in December, 1979, and has been in the process of preparing a construction permit application for Channel 54 at Toledo since then. TCB submits that Toledo is a market whose vitality deserves two independent television outlets and that keeping the two channels assigned to Toledo would further the Commission's objectives of maximizing diversity of viewpoints available in a broadcast marketplace.

3. TCB offers no supporting data regarding Toledo's claimed vitality. In addition, Channels 54 and 60 have remained vacant at Toledo for a number of years while in many communities all assigned television channels have been occupied. Finally, TCB does not indicate that Channel 36 could not be used for its planned station.

4. As was indicated in the *Notice*, these proposed changes are needed to resolve conflicts with a revised Canadian UHF television table. The revised Canadian table was originated to clear UHF Channels 70 through 83 (the 806–890 MHz frequency band) of Canadian television stations and assignments. This will make possible land mobile use of this band in the common border area by both countries.[1]

5. We have carefully considered the proposal herein and the comments of TCB, and believe it would be in the public interest to make the substitutions proposed. The need for land mobile use of the 806–890 MHz band in the border area far outweighs any reasons for retaining two unoccupied and unapplied for television assignments at Toledo.

6. Two recently granted construction permits specify channel assignments which are being deleted herein (File No. BPCT-5176 for Station WSFJ on Channel 52 in Newark, Ohio, and File No. BPCT-781023KE on Channel 51 in Sandusky, Ohio). Since the grants were specifically conditioned on the outcome of U.S./Canadian negotiations, and the channels assigned in Newark and Sandusky are being changed, we will modify their authorizations to specify the newly assigned channels.

7. Finally, at the time of the *Notice*, there were on file three applications for the use of Channel 36 in Lansing, Michigan. (Subsequently, one of the three applicants submitted an amendment to its application to specify Channel 53.) While we are substituting Channel 47 for Channel 36 in Lansing, each application, if amended to Channel 47 at its currently requested site, would have a short-spacing. Channel 53 is currently assigned to Lansing, though, and each remaining application may be amended to Channel 53 with no change in site and no short-spacings. We believe that since these applicants have concluded cut-off procedure once on Channel 36, they should have an opportunity to retain their cut-off protection. Since we have substituted Channel 47 for Channel 36, we will permit the applications to be amended to specify the Channel 47 assignment at a new site and retain cut-off protection. If, however, applicants wish to keep their proposed sites and specify Channel 53, we believe that they must face a new cut-off date with the possibility of additional competing applications.

8. In view of the foregoing, it is ordered, that effective September 10, 1980, § 73.606(b) of the Commission's rules, the Television Table of Assignments, is amended with respect to the channel assignments at the following communities:

City	Channel No.
Lansing, Michigan	6-, 47, 53-
Saginaw, Michigan	25-, 49-
Newark, Ohio	*31-, 51
Sandusky, Ohio	52
Toledo, Ohio	11-, 13, 24-, *30+, 36-

9. Authority for the action taken herein is contained in Sections 4(i), 5(d)(1), 303(g) and (r) and 307(b) of the Communications Act of 1934, as amended, and § 0.281 of the Commission's rules.

10. It is further ordered, that pursuant to § 316(a) of the Communications Act of 1934, as amended, the outstanding construction permit held by Christian Television of Ohio, Inc. for Station WSFJ, Newark, Ohio, is modified, effective September 10, 1980, to specify operation on UHF-TV Channel 51 instead of UHF-TV Channel 52. The permittee shall inform the Commission in writing by no later than September 10, 1980, of its acceptance of this modification. In addition, the permittee shall, within 60 days of receipt of this *Order*, submit to the Commission the technical information normally required of an applicant for Channel 51.

11. It is further ordered, that pursuant to § 316(a) of the Communications Act of 1934, as amended, the outstanding construction permit held by Christian Faith Broadcast, Inc., for a television station in Sandusky, Ohio, is modified,

[1] Land mobile use of the 806–890 MHz band has been allowed in the United States, except in the border areas, since 1970. See *Land Mobile Use of 806–890 MHz Band, Notice of Proposed Rule Making*, Docket 18262, 14 F.C.C. 2d 311 (1968); *First Report and Second Notice of Inquiry*, Docket 18262, 35 F.R. 8644 (1970); *Land Mobile Service, Memorandum Opinion and Order*, Docket 18262, 51 F.C.C. 2d 945 (1975).

effective September 10, 1980, to specify operation on UHF-TV Channel 52 instead of UHF-TV Channel 51. The permittee shall inform the Commission in writing by no later than September 10, 1980, of its acceptance of this modification. In addition, the permittee shall, within 60 days of receipt of this *Order*, submit to the Commission the technical information normally required of an applicant for Channel 52.

12. It is further ordered, that copies of this document SHALL BE SENT by Certified Mail, Return Receipt Requested, to the following permittees and applicants: Christian Television of Ohio, Inc., c/o Michael F. Riley, 8869 National Rd. SW., Pataskalia, Ohio 43062; Christian Faith Broadcast, Inc., 3809 Maple Ave., Castalia, Ohio 44824; Benko Broadcasting Company, 1503 Jolley Rd., Okemos, Michigan 48864; Kare-Kim Broadcasting Company, Inc., 2405 W. McNichols, Detroit, Michigan 48221; and F & S Communications/News, Inc., 4280 West Saginaw Highway, Lansing, Michigan 48917.

13. It is further ordered, that this proceeding is termined.

14. For further information concerning this proceeding, contact Gordon W. Godfrey, Broadcast Bureau, (202) 632-9660.

(Secs. 4, 5, 303, 48 Stat., as amended, 1066, 1068, 1082; (47 U.S.C. 154, 155, 303))

Federal Communications Commission.

Henry L. Baumann,

Chief, Policy and Rules Division, Broadcast Bureau.

[FR Doc. 80-23642 Filed 8-5-80; 8:45 am]

BILLING CODE 6712-01-M

---

47 CFR Part 76

[FCC 80-406]

Cable Television Services; Registration Statement; Clarification

AGENCY: Federal Communications Commission.

ACTION: Clarification and Amendment of Rules.

SUMMARY: The subject *Order* discusses § 76.12 of the Rules to make it clear that a cable facility which separately serves fewer than 50 subscribers but which is a part of a larger system which aggregately serves 50 or more subscribers is required to register. The *Order* also amends § 76.12(e) to remove any implication that more than one cable television system community unit may be listed on a single registration statement.

EFFECTIVE DATE: August 18, 1980.

ADDRESSES: Office of the Secretary, Federal Communications Commission, 1919 M Street, N.W., Washington, D.C. 20554.

FOR FURTHER INFORMATION CONTACT: Bob Ratcliffe, Cable Television Bureau, (202) 254-3407.

SUPPLEMENTARY INFORMATION:

Adopted: July 8, 1980.

Released: August 1, 1980.

By The Commission.

In the matter of: clarification and amendment of § 76.12 of the Commission's rules; Order.

1. It has come to our attention that some confusion exists among cable operators as to the exact scope of the registration requirements found in § 76.12 of the Commission's Rules. Specifically, questions have arisen concerning the circumstances under which a cable facility serving less than 50 subscribers is required to file a registration statement. The purpose of the present *Order* is to clarify this point and to amend certain language in § 76.12 which may have contributed to the prevailing uncertainty regarding that section's applicability.

2. Section 76.12 states, in part:

> A system community unit shall be authorized to commence operation or to add a television broadcast signal to existing operations only after filing with the Commission [a registration statement].

The obligation to file a registration statement, then, is dependent upon whether or not the cable facility concerned constitutes a "system community unit" within the meaning of the rules. Section 76.5(mm) defines such a unit as follows:

> A cable television system, or a portion of a cable television system, that operates or will operate within a separate and distinct community or municipal entity (including unincorporated communities within unincorporated areas and including single, discrete unincorporated areas).

The critical aspect of this definition for our purposes is the requirement that a cable facility constitute a cable television system or a portion of such a system in order to qualify as a community unit. Since a cable television system is defined, in part, by service to 50 or more subscribers [1], this requirement means that a qualifying facility must either serves 50 subscribers in its own right *or* operate as a part of a set of facilities which, taken together, serve 50 or more subscribers. There is no condition, however, in this definition or elsewhere in the rules that each facility comprising a multiple facility system serve 50 subscribers independently. Accordingly, a cable facility serving less than 50 subscribers separately, but which is a part of a system aggregately serving 50 or more subscribers, constitutes a community unit within the meaning of § 76.5(mm) and must file a registration statement pursuant to § 76.12 of the rules.[2]

3. In undertaking our review of § 76.12 in connection with this *Order*, it became apparent that § 76.12(e) is poorly drafted and may be one source of the current confusion concerning registration. Paragraph (e), as presently drawn, requires cable operators to submit the following information as part of a registration statement:

> (e) The name of each separate community or area served and the county in which it is located.

Clearly, this provision implies that more than one community or area may be involved. But, since the entity required to file a registration statement is a community unit and such a unit serves, by definition, only one community or discrete area, this implication is contradictory. It is, moreover, inconsistent with our position, which we clearly stated upon adopting the registration process, that each individual community unit would be required to file a separate registration statement.[3] We shall, therefore, amend paragraph (e) to read as follows:

> (e) The name of the community or area served and the county(ies) in which it is located.

Some clarification of § 76.12(d) also seems appropriate, although amendment of its terms is not necessary. This provision states that operators shall indicate "the date the system provided service to 50 subscribers" as a part of a registration statement. We wish to make it clear that where the community unit filing the registration statement is not a system unto itself, the information requested by paragraph (d) refers to the date on which the aggregate subscribership of the system of which the filing unit is a part reached 50.

4. Finally, we are aware that under the Commission's former certification

---

[1] Section 76.5(a) defines a cable television system as: A nonbroadcast facility consisting of a set of transmission paths and associated signal generation, reception, and control equipment, under common ownership and control, that distributes or is designed to distribute to subscribers the signals of one or more television broadcast stations, but such term shall not include (1) any such facility that serves or will serve fewer than 50 subscribers * * *.

[2] Conversely, of course, a cable facility which serves fewer than 50 subscribers, but which stands alone, is not within the definition of a community unit and is not required to register.

[3] *See Report and Order in CT Docket No. 78-206*, FCC 78-690, 69 FCC 2d 697 (1978), at para. 12.

process, community units with less than 50 subscribers, even though part of a system with 50 or more subscribers, were not required to obtain a certificate of compliance.[4] This policy may well have contributed to operator uncertainty regarding the obligation to register under 50 subscriber units upon our adoption of the registration process and deletion of the certificating mechanism. It is sufficient to confirm here that such registration is required and to note that our policy revision in this connection was based upon the greatly reduced burden which the registration obligation imposes on cable operators and our conclusion that registration of less than 50 subscriber units would contribute measurably to the accuracy and coherence of our information data base and thus to a more efficient administration of our regulatory responsibilities in the cable area.[5]

5. Since the clarification and rule amendment adopted herein are interpretive in nature, the prior notice and effective date provisions of Section 4 of the Administrative Procedure Act, 5 U.S.C. 553, are inapplicable. Authority for the amendment being adopted is contained in Sections 2, 3, 4(i) and (j), 301, 303, 307, 308 and 309 of the Communications Act of 1934, as amended.

ACCORDINGLY, IT IS ORDERED, That effective August 18, 1980, Section 76.12 of the Commission's Rules and Regulations IS AMENDED as set forth in the attached Appendix.

(Secs. 2, 3, 4, 5, 301, 303, 307, 308, 309, 315, 317, 48 Stat., as amended, 1064, 1065, 1066, 1068, 1081, 1082, 1083, 1084, 1085, 1088, 1089; 47 U.S.C. 152, 153, 154, 155, 301, 303, 307, 308, 309, 315, 317)

Federal Communications Commission.

William J. Tricarico,

Secretary.

Appendix

Part 76 of Chapter I of Title 47 of the Code of Federal Regulations is amended as follows:

1. In § 76.12, paragraph (e) is revised to read as follows:

§ 76.12 Registration statement required.

* * * * *

(e) The name of the community or area served and the county in which it is located.

* * * * *

[FR Doc. 80-23640 Filed 8-5-80; 8:45 am]

BILLING CODE 6712-01-M

[4] *See First Report and Order in Docket 20561,* FCC 77-205, 63 FCC 2d 956 (1977) at n. 19.

[5] Given the uncertainty surrounding the registration obligation we have clarified today, we do not anticipate enforcement action against community units within the scope of this *Order* for failure to comply with Section 76.12, if such units file the required registration statement within 60 days of the effective date of this *Order.*

---

47 CFR Parts 13, 81, 83, and 87

[Docket No. 20817; FCC 80-416]

Establishing a Marine Radio Operator Permit and Deleting the Radiotelephone Third-Class Operator Permit

AGENCY: Federal Communications Commission.

ACTION: Final rule.

SUMMARY: The Commission amends Parts 13, 81, 83 and 87 of the Rules to institute a new radio operator license called the "Marine Radio Operator Permit", to abolish the Radiotelephone Third Class Operator Permit, and to change the examination order for its licenses. Primary purpose is to reduce operating costs by ceasing to issue licenses where no regulatory requirement exists for them.

EFFECTIVE DATE: To be specified later in a Public Notice.

ADDRESSES: Federal Communications Commission, Washington, D.C. 20554.

FOR FURTHER INFORMATION CONTACT: Roy E. Kolly or Vernon P. Wilson, Field Operations Bureau, 202-632-7240.

SUPPLEMENTARY INFORMATION:

In the matter of Amendments of Parts 13, 81, 83, and 87 of the Commission's Rules to establish a Marine Radio Operator Permit and delete the Radiotelephone Third Class Operator Permit; Third Report and Order *See also* 44 FR 66816, November 21, 1979.

Adopted: July 17, 1980.

Released: August 7, 1980.

By the Commission:

1. This instant Third Report and Order is intended to (1) abolish the Radiotelephone Third Class Operator Permit, and (2) institute a new Marine Radio Operator Permit. The Commission issues 53,000 third class permits annually, primarily to individuals having no legitimate need for the permit. The situation prevails in large part because of deregulation steps previously taken by the Commission in this docket.[1] Through this Order we are modifying the examination and license structure to eliminate the issuance of third class permits where no regulatory requirements for the permit exist.

2. We have explored the reasons why individuals obtain third class permits, and we can divide them into four categories. One category consists of those wanting third class permits so that they can become routine operators at AM, FM and TV stations. The routine operators at these stations need only Restricted Radiotelephone Operator Permits which require no examination.[2] Yet persons obtain third class permits—which require passing a relatively simple examination on basic radio laws and operating practices—because they believe the third class permit will give them an advantage when competing for employment in a tight market. Of the third class permits we issue, 40 percent are to individuals in this category.

3. To get a second class license an applicant must first pass the simple third class examination on basic radio laws and operating practice, and then a more difficult examination on electronic theory. The applicant may take these two examinations in one sitting, or break them up into two parts. Frequently, the applicant takes and passes the easier examination on radio laws and operating practice, and then waits a few months before taking the more difficult technical examination. Upon passing the examination on radio laws and operating practice, the applicant qualifies for and is issued a third class permit for which there is no need since the applicant's ultimate goal is a second class license. Forty percent of the third class permits we issue are to individuals in this category.

4. Some applicants for second class licenses do elect to take the simple and the difficult examination in one sitting. However, if the applicant does not pass the difficult technical examination after passing the simple examination on rules and operating practices, the applicant is issued the third class permit for which he qualified. These applicants have no need for the third class permit which they view as a consolation prize, for their goal is the second class license. Eighteen percent of the third class permits issued are to individuals in this category.

5. In the last category are individuals the FCC requires to hold third class permits. These are primarily the persons who operate the radios on Great Lakes freighters and on charter fishing vessels.

[1] The First Report & Order, Docket 20817, was released January 5, 1979 (44 FR 1733). The Second Report and Order was released November 16, 1979 (44 FR 66861). Docket 20817 involved a general review and revision of the FCC's radio operator licensing procedures.

[2] Section 318 of the Communications Act of 1934, as amended, allows the operation of broadcast stations only by persons holding an operator license issued by the Commission.

Two percent of the third class permits issued are to individuals in this last category. These persons have a legitimate need for the permit because of the safety requirements of the Great Lakes Agreement and the FCC rules governing vessels carrying passengers for hire.

6. From the foregoing it can be seen that there is no FCC requirement for 98 percent of the third class permits that we issue, nor does there appear to be any public interest benefit for awarding third class permits in these situations. By merely revising the order in which the examinations are taken, we can eliminate the necessity of issuing most third class permits. By this order we are amending the Rules to require an applicant for a second class license to pass the more difficult technical examination (now called element three) before attempting the relatively simple examination (now called elements one and two) on FCC Rules and operating practices.

7. Those who pass both examinations will be issued a second class license. Those who fail the difficult technical examination will not be entitled to take the simple examination on Rules and operating practices, and no license will be issued. To the very few who pass the difficult part but fail the simple part, we will issue one-year credit certificates to spare them the burden of re-taking the passed examination.

8. We recognize the need for the maritime radio operators mentioned previously (Great Lakes vessels, charter fishing vessels, and some coast stations) to demonstrate their qualifications through a relatively simple examination. However, instead of issuing them third class permits, we will issue them a certificate more appropriately called a "Marine Radio Operator Permit." This permit will be valid only for operating maritime stations, and it cannot be used as credit toward any other operator license.

9. We also realize that on some occasions a person will need to hold both a Marine Radio Operator Permit for maritime communications, and a Restricted Radiotelephone Operator Permit for, perhaps, broadcast operation. We are thus modifying our Rules to allow an individual in such cases to hold more than one operator permit.

10. We now come to the question of how to deal with persons holding third class permits. These persons may continue to hold and use third class permits until they expire. However, the third class permits will not be renewed. Persons applying for a renewal will be issued the new Marine Radio Operator Permit if they so desire. Additionally, they may obtain the Restricted Radiotelephone Operator Permit. By having these two permits, a person will still be able to operate the same stations they could under the third class permit.

11. Authority for these amendments appears in Sections 4(i) and 303 of the Communications Act of 1934, as amended. In that the amendments adopted herein are editorial and procedural in nature, the prior notice and public procedure provisions of the Administrative Procedure Act, 5 U.S.C. 553 are not applicable. However, as the amendments being adopted are subject to clearance of reporting requirements by the General Accounting Office, the effective date of this action will be announced by public notice in the near future.

12. Further information on this matter may be obtained from Vernon Wilson or Roy E. Kolly, telephone 202-632-7240.

13. Accordingly, it is ordered that Parts 13, 81, 83, and 87 of the Commission's Rules are amended as set forth in the attached Appendix, effective on the date to be specified in a Public Notice in the Federal Register in the near future.

(Secs. 4, 303, 48 stat., as amended, 1066, 1082; 47 U.S.C. 154, 303)

Federal Communications Commission.

William J. Tricarico,

Secretary.

Appendix

PART 13—COMMERCIAL RADIO OPERATOR

Part 13 of the FCC Rules and Regulations is amended as follows:

1. Section 13.2(b)(2)(ii) is added to read as follows:

§ 13.2 Classification of operator licenses and endorsements.

* * * * *

(b) * * *

(2) * * *

(ii) Marine Radio Operator Permit.

* * * * *

2. Section 13.3(a) is revised to read as follows:

§ 13.3 Dual holding of licenses.

(a) U.S. citizens, citizens of American Samoa, and Trust Territory citizens may hold the Restricted Radiotelephone Operator Permit and the Marine Radio Operator Permit at the same time. Otherwise they may not hold more than one radiotelephone license and one radiotelegraph license at the same time.

* * * * *

3. Section 13.5(c)(2) is revised to read as follows:

§ 13.5 Eligibility for new license.

* * * * *

(c) * * *

(2) If the applicant afflicted with blindness is afforded a waiver of the written examination requirements and is found qualified for a Radiotelephone First Class Operator License, Radiotelephone Second Class Operator License, or a Marine Radio Operator Permit, the applicant may be issued the license or permit, provided that the license or permit so received shall bear an endorsement as follows:

This license is not valid for the operation of any station licensed by the Commission unless the station has been adapted for operation by a blind person and the equipment to be used in such station for the purpose is capable of providing for operation in compliance with the Commission's Rules.

Note.—Some Radiotelephone Third Class Operator Permits previously issued by the Commission also bear this endorsement.

* * * * *

4. Section 13.11(e) is revised to read as follows:

§ 13.11 Procedure.

* * * * *

(e) *Blind applicant.* A blind person seeking an examination for Radiotelephone First Class Operator License, Radiotelephone Second Class Operator License, or Marine Radio Operator Permit shall make a request in writing to the appropriate field office for a time and date to appear for such examination. The examination shall be administered only at the field office. Requests for examinations shall be made at least 2 weeks prior to the date on which the examination is desired.

5. Section 13.22 is revised to read as follows:

§ 13.22 Examination requirements.

Applicants for original licenses will be required to pass examinations as follows:

(a) *Radiotelephone First Class Operator License.* (1) Ability to transmit and receive spoken messages in English.

(2) Written examination elements 3, 1, 2, and 4.

(b) *Radiotelephone Second Class Operator License.* (1) Ability to transmit and receive spoken messages in English.

(2) Written examination elements 3, 1, and 2.

(c) *Marine Radio Operator Permit.* (1) Ability to transmit and receive spoken messages in English.

(2) Written examination elements 1 and 2 (marine version).

(d) *Radiotelegraph First Class Operator License.* (1) Ability to transmit and receive spoken messages in English.

(2) Transmitting and receiving code test of twenty-five (25) words per minute plain language and twenty (20) code groups per minute.

(3) Written examination elements 1, 2, 5, and 6.

(e) *Radiotelegraph Second Class Operator License.* (1) Ability to transmit and receive spoken messages in English.

(2) Transmitting and receiving code test of twenty (20) words per minute plain language and sixteen (16) code groups per minute.

(3) Written examination elements 1, 2, 5, and 6.

(f) *Radiotelegraph Third Class Operator Permit.* (1) Ability to transmit and receive spoken messages in English.

(2) Transmitting and receiving code test of twenty (20) words per minute plain language and sixteen (16) code groups per minute.

(3) Written examination elements 1, 2, and 5.

(g) *Restricted Radiotelephone Operator Permit.* No oral or written examination is required for this permit. In lieu thereof, applicants will be required to certify in writing to a declaration which states that the applicant has need for the requested permit; can receive and transmit spoken messages in English; can keep at least a rough written log in English or in some other language in general use that can be readily translated into English; is familiar with the provisions of treaties, laws, and rules and regulations governing the authority granted under the requested permit; and understands that it is his responsibility to keep currently familiar with all such provisions.

6. Section 13.25 is revised to read as follows:

§ 13.25 New class, additional requirements.

The holder of a first, second and third class license who applied for another license will be required to pass only the added examination requirements for the new class license. Provided that the holder of a radiotelegraph third class operator permit who takes an examination for a radiotelegraph second class operator license more than one year after the issuance date of the third class permit will also be required to pass the code test prescribed therefor:

7. Section 13.26 is revised to read as follows:

§ 13.26 Cancelling and issuing new licenses.

If the holder of a license qualifies for a new license as shown in the following table, the license held will be cancelled upon issuance of the new license:

New license issued	License to be cancelled
Radiotelegraph First Class Operator License.	Radiotelegraph Second or Third Class Operator License, Restricted Radiotelephone Operator Permit.
Radiotelegraph Second Class Operator License.	Radiotelegraph Third Class Operator Permit, Restricted Radiotelephone Operator Permit.
Radiotelegraph Third Class Operator Permit.	Restricted Radiotelephone Operator Permit.
Radiotelephone First Class Operator License.	Radiotelephone Second or Third Class Operator License, Restricted Radiotelephone Operator Permit, Marine Radio Operator Permit.
Radiotelephone Second Class Operator License.	Radiotelephone Third Class Operator Permit, Restricted Radiotelephone Operator Permit, Marine Radio Operator Permit.
Marine Radio Operator Permit.	Radiotelephone Third Class Operator Permit.

8. Section 13.27 is revised to read as follows:

§ 13.27 Eligibility for re-examination.

An applicant who fails an examination element, including a code test element, will be ineligible for 2 months to take an examination for any class of license requiring that element. Examination elements will be graded in the order listed (see § 13.22), and an applicant may, without further application, be issued the class of license for which he qualifies.

Note.—A month after date is the same day of the following month, or if there is no such day, the last day of such month. This principle applies for other periods. For example, in the case of the 2 month period to which this note refers, an applicant examined December 1 may be re-examined February 1, and an applicant examined December 29, 30, or 31 may be re-examined the last day of February while one examined February 28 may be re-examined April 28.

9. In § 13.28, headnote and text are revised to read as follows:

§ 13.28 License renewals.

(a) Restricted Radiotelephone Operator Permits issued to U.S. citizens, citizens of American Samoa, and Trust Territory Citizens are issued for the lifetime of the holder and need not be renewed.

(b) Other licenses issued for five year periods may be renewed upon proper application. There are no service or examination requirements for renewals.

(c) The Radiotelephone Third Class Operator Permit will not be renewed as such. Persons holding this permit may be issued a Marine Radio Operator Permit and a Restricted Radiotelephone Operator Permit.

10. Section 13.61(i) is added to read as follows:

§ 13.61 Operating authority.

* * * * *

(i) *Marine Radio Operator Permit.* Any station except:

(A) Stations transmitting telegraphy by any type of the Morse Code, or

(B) AM, FM, TV and International Broadcast Stations.

(C) Class I-B coast stations at which the power is authorized to exceed 250 watts carrier power or 1,000 watts peak envelope power, or

(D) Class II-B or Class III-B coast stations, other than those in Alaska, at which the power is authorized to exceed 250 watts carrier power or 1,000 watts peak envelope power, or

(E) Ship stations or aircraft stations at which the installation is not used solely for telephony, direct-printing or at which the power is more than 250 watts carrier power or 1,000 watts peak envelope power: Provided, That (*1*) such operator is prohibited from making any adjustments that may result in improper transmitter operation, and (*2*) the equipment is so designed that the stability of the frequencies of the transmitter is maintained by the transmitter itself within the limits of tolerance specified by the station license, and none of the operations necessary to be performed during the course of normal rendition of the service of the station may cause off-frequency operation or result in any unauthorized radiation, and (*3*) any needed adjustments of the transmitter that may affect the proper operation of the station are regularly made by or under the immediate supervision and responsibility of a person holding a first or second class commercial radio operator license, either radiotelephone or radiotelegraph as may be appropriate for the class of station involved (as determined by the scope of the authority of the respective licenses as set forth in paragraphs (a), (b), (e), and (f) of this section and § 13.62), who shall be responsible for the proper functioning of the station equipment, and (*4*) in the case of ship radiotelephone or aircraft radiotelephone stations when the power in the antenna of the unmodulated carrier wave is authorized to exceed 100 watts, any needed adjustments of the transmitter that may affect the proper operation of the station are made only by or under the immediate supervision and responsibility of an operator holding a first or second class radiotelegraph or radiotelephone license, who shall be responsible for the proper functioning of the station equipment.

11. Section 13.62(c) is amended to read as follows:

§ 13.62 Special privileges.

* * * * *

(c) The holder of Radiotelephone or Radiotelegraph First, Second, and Third Class Licenses, or the holder of a Restricted Radiotelephone Operator Permit may perform routine transmitter operating duties at any AM, FM, or TV broadcast station. However, if the operator holds a license other than a First Class Radiotelephone Operator License, only such duties as set forth in paragraph (d) of this Section may be performed, under the following conditions and restrictions:

(1) The licensee of the station has fully instructed the operator in the performance of all transmitter adjustments described in paragraph (d) and in all other required operator duties such as the reading of meters and making of log entries.

(2) The licensee of the broadcast station has posted at each operating position step-by-step instructions for all transmitter adjustments and operating procedures which duty operators, employed under the provisions of this paragraph, are required to perform. Also posted must be a table or chart of the limiting values of transmission system operating parameters that are required to be observed and logged.

(3) The emissions of the station must be terminated whenever the transmitting system is observed operating beyond the posted limiting values or in any other manner inconsistent with the rule or station authorization when the adjustments listed in paragraph (d) are ineffective in correcting the improper operation.

* * * * *

PART 81—STATIONS ON LAND IN THE MARITIME SERVICES AND ALASKA-PUBLIC FIXED STATIONS

Part 81 of the FCC Rules and Regulations is amended as follows:

1. Section 81.151(a) and headnote are revised to read as follows:

§ 81.151 Graded values of commercial *operator licenses.*

(a) The classes of commercial radio operator authorizations are arranged in order of descending value for the purposes of this part, as follows:

T-1, Radiotelegraph First Class Operator License.
T-2, Radiotelegraph Second Class Operator License.
P-1, Radiotelephone First Class Operator License.
P-2, Radiotelephone Second Class Operator License.
T-3, Radiotelegraph Third Class Operator Permit.
P-3, Radiotelephone Third Class Operator Permit.
MP, Marine Radio Operator Permit.
RP, Restricted Radiotelephone Operator Permit.

2. Section 81.152(d) is revised to read as follows:

§ 81.152 Operator required.

* * * * *

	Minimum operator authorization
(d) Description of station:	
Public coast telegraph, all classes, except:	T-2
A1 Morse under supervision of T1 or T2.	T-3
NB-DP under supervision of T1 or T2.	T-3, P-3, MP
Coast telephone, all classes, except in Alaska:	
Exceeds 250 watts carrier power or 1,500 watts peak envelope power.	T-2 or P-2
250 watts or less carrier power; or 1,500 watts or less peak envelope power operating on frequencies below 30 MHz.	T-3, P-3, MP
250 watts or less carrier power, or 1,500 watts or less peak envelope power operating on frequencies above 30 MHz.	RP
Coast telephone, in Alaska:	
Exceeds 250 watts carrier power, or 1,500 watts peak envelope power, Class I station.	T-2, or P-2
Exceeds 250 watts carrier power, or 1,500 watts peak envelope power, Class II or Class III station.	T-3, P-3, MP
250 watts or less carrier power, or 1,500 watts or less peak envelope power, all classes.	RP
Marine fixed, except in Alaska	RP
Marine fixed, in Alaska	RP
Marine utility coast	RP
Shipyard base	RP

* * * * *

3. Section 81.154(a), introductory text, is revised to read as follows:

§ 81.154 Limitations applicable to commercial radio operator permits.

(a) With respect to any station subject to this part which the holder of a Radiotelegraph or Radiotelephone Third Class Operator Permit, a Marine Radio Operator Permit, or a Restricted Radiotelephone Operator Permit may operate, the following provisions shall apply:

* * * * *

PART 83—STATIONS ON SHIPBOARD IN THE MARITIME SERVCIES

Part 83 of the FCC Rules and Regulations is amended as follows:

1. Section 83.151(a) is revised to read as follows:

§ 83.151 Graded values of commercial radio operator authorizations.

(a) The classes of commercial radio operator authorizations are arranged in order of descending value for the purposes of this part, as follows:

T-1, Radiotelegraph First Class Operator License.
T-2, Radiotelegraph Second Class Operator License.
P-1, Radiotelephone First Class Operator License.
P-2, Radiotelephone Second Class Operator License.
T-3, Radiotelegraph Third Class Operator Permit.
P-3, Radiotelephone Third Class Operator Permit.
MP, Marine Radio Operator Permit.
RP, Restricted Radiotelephone Operator Permit.

2. Section 83.155 (d) and (e) are revised to read as follows:

§ 83.155 Operator(s) required by Title III of Communications Act of 1934.

* * * * *

(d) Each cargo ship of the United States which, in accordance with Part II of Title III of the Communications Act, is equipped with a radiotelephone station shall for distress and safety purposes carry at least one qualified operator. Where the power of the station does not exceed 250 watts carrier power for A3 emission, or 1000 watts peak envelope power for A3A, A3H and A3J emissions, such operator shall hold a Marine Radio Operator Permit, a Radiotelephone Third Class Operator Permit, or a higher class of operator authorization. Where the power of the station exceeds 250 watts carrier power for A3 emission, or 1000 watts peak envelope power for A3A, A3H and A3J emissions such operator shall, as a minimum, hold a Radiotelephone Second Class Operator License.

(e) Each vessel of the United States transporting more than six passengers for hire, which in accordance with Part III of Title III of the Communications Act is equipped with a radiotelephone installation, shall for safety purposes carry at least one qualified operator. Where the power of the station does not exceed 250 watts carrier power or 1,500 watts peak envelope power, such operator shall hold a Marine Radio Operator Permit, a Radiotelephone Third Class Operator Permit, or a higher class of operator authorization. Where the power of the station exceeds 250 watts carrier power or 1,500 watts peak envelope power, such operator shall, as a minimum, hold a Radiotelephone Second Class Operator License.

3. Section 83.156(b)(3) is revised to read as follows:

§ 83.156 Operator(s) required by the Safety Convention.

* * * * *

(b) * * *

(3) Where the power of the station does not exceed 250 watts carrier power for A3 emission, or 1000 watts peak envelope power for A3A, A3H and A3J emissions such operator shall hold a Marine Radio Operator Permit, a Radiotelephone Third Class Operator Permit, or a higher class of operator authorization. Where the power of the station exceeds 250 watts carrier power for A3 emission or 1000 watts peak envelope power for A3A, A3H and A3J emissions such operator shall, as a minimum, hold a Radiotelephone Second Class Operator License.

4. Section 83.157(a) is revised to read as follows:

§ 83.157 Licensed operators required by Great Lakes Radio Agreement.

(a) For the purpose of complying with Article VII, paragraph 1 of the Great Lakes Radio Agreement, there shall be on board each United States vessel when underway and subject to the Great Lakes Radio Agreement, as an officer or member of the crew, at least one person who shall hold a Marine Radio Operator Permit, a Radiotelephone Third Class Operator Permit, or higher class of authorization.

* * * * *

5. Section 83.159 is revised to read as follows:

§ 83.159 Operator requirements for noncompulsory stations.

	Minimum Operator Authorization
Description of station:	
Ship telegraph, except direct-printing	T-2
Ship direct-printing telegraph	P-3, MP
Ship telephone, more than 250 watts carrier power or 1,000 watts peak envelope power.	P-2
Ship telephone, not more than 250 watts carrier power or 1,000 watts peak envelope power.	P-3, MP
Ship telephone, not more than 100 watts carrier power or 400 watts peak envelope power.	RP
Marine-utility	RP
Ship radiolocation-test, using radar only.	P-2[1]
Ship earth station	RP

[1] With ship radar endorsement.

6. Section 83.160(a), introductory text, is revised to read as follows:

§ 83.160 Limitations applicable to commercial radio operator permits.

(a) With respect to any station subject to this part which the holder of a Radiotelegraph or Radiotelephone Third Class Operator Permit, a Marine Radio Operator Permit, or a Restricted Radiotelephone Operator Permit may operate, the following provisions shall apply:

* * * * *

PART 87—AVIATION SERVICES

Part 87 of the FCC Rules and Regulations is amended as follows.

1. Section 87.133(a)(1), introductory text, is revised to read as follows:

§ 87.133 General operator requirements.

(a) * * *

(1) Only a person holding a Marine Radio Operator Permit or a third class or higher operator permit shall operate aircraft stations.

* * * * *

2. Section 87.136(a) is revised to read as follows:

§ 87.136 Operation of transmitter controls.

(a) Operation of the station by the holder of a Radiotelephone or Radiotelegraph Third Class Operator Permit, a Marine Radio Operator Permit, or a Restricted Radiotelephone Operator Permit shall be subject to the condition that the operation of the transmitter shall require only the use of simple external switching devices, excluding all manual adjustment of frequency determining elements, and the stability of the frequencies shall be maintained by the transmitter itself within the limits of tolerance specified by § 87.65 or the station license. In addition, when using an aircraft radio station on maritime mobile service frequencies the carrier power of the transmitter shall not exceed 250 watts (emission A3) or 1000 watts (emission A3A, A3H, A3J).

* * * * *

3. Section 87.139(b)(2) is revised to read as follows:

§ 87.139 Operator licenses not required for certain operations.

* * * * *

(b) * * *

(2) Operation by an unlicensed person shall be confined to transmitters which may be operated by the holder of a Marine Radio Operator Permit or a third class or a Restricted Permit as specified in § 87.136(a).

Note.—Whenever the term "license" is used generally to denote an operator authorization it includes "permit".

[FR Doc. 80-23641 Filed 8-5-80; 8:45 am]

BILLING CODE 6712-01-M

INTERSTATE COMMERCE COMMISSION

49 CFR Parts 1002, 1003, 1045A, 1056, 1062, 1100, 1130, 1150

[Ex Parte No. 55; Sub-No. 43]

Rules Governing Applications for Operating Authority

AGENCY: Interstate Commerce Commission.

ACTION: Correction to Notice of interim rules and request for comments.

SUMMARY: At 45 FR 45534, July 3, 1980, there appeared a notice implementing the Motor Carrier Act of 1980 which revised the rules governing the application process for motor carriers entering the trucking field. In that notice, on page 45538, column 2, last paragraph, 2 lines of text were inadvertently omitted. To be inserted after the 6th line of that paragraph are the following lines: "retroactive effect unless they clearly provide for such effect. Nothing in the legislative history of the Act".

FOR FURTHER INFORMATION CONTACT: Peter Metrinko, 202-275-7885.

Agatha L. Mergenovich,

Secretary.

[FR Doc. 80-23691 Filed 8-5-80; 8:45 am]

BILLING CODE 7035-01-M

49 CFR Part 1033

[3rd Rev. S.O. 1474]

Various Railroads Authorized To Use Tracks and/or Facilities of Chicago, Milwaukee, St. Paul and Pacific Railroad Company, Debtor, (Richard B. Ogilvie, Trustee)

Decided: July 29, 1980.

AGENCY: Interstate Commerce Commission.

ACTION: Third Revised Service Order No. 1474

SUMMARY: Pursuant to Section 122 of the Rock Island Transition and Employee Assistance Act, Public Law 96-254, the Commission is authorizing various railroads to provide interim service over Chicago, Milwaukee, St. Paul and Pacific Railroad Company, Debtor, (Richard B. Ogilvie, Trustee), (MILW) and to use such tracks and facilities as are necessary for that operation.

In view of the urgent need for continued service over MILW's lines pending the implementation of long-range solutions, this order permits carriers, previously providing service under various individual service orders to operate under authority of a single order which appendix describes their

operations, and to continue to provide service to shippers which would otherwise be deprived of essential rail transportation.

In particular, this order grants authority to Burlington Northern Inc. In Sioux City, Iowa, between milepost 509.77 and milepost 512.62, a distance of approximately 2.85 miles.

EFFECTIVE DATE: 12:01 a.m., July 31, 1980, and continuing in effect until 11:59 p.m., September 30, 1980, unless modified, amended or vacated by order of this Commission.

FOR FURTHER INFORMATION CONTACT: M. F. Clemens, Jr. (202) 275-7840.

Pursuant to Section 122 of the Rock Island Transition and Employee Assistance Act, Public Law 96-254, the Commission is authorizing various railroads to provide interim service over Chicago, Milwaukee, St. Paul and Pacific Railroad Company, Debtor, (Richard B. Ogilvie, Trustee), (MILW) and to use such tracks and facilities as are necessary for that operation.

In view of the urgent need for continued service over MILW's lines pending the implementation of long-range solutions, this order permits carriers, previously providing service under various individual service orders to operate under authority of a single order which appendix describes their operations, and to continue to provide service to shippers which would otherwise be deprived of essential rail transportation.

Third Revised Service Order No. 1474, is revised by granting authority to the Burlington Northern Inc., item 15, permitting an interim operation over lines in the state of Iowa.

It is the opinion of the Commission that an emergency exists requiring that the railroads listed in the attached appendix be authorized to conduct operations, also identified in the attachment, using MILW tracks and/or facilities; that notice and public procedure are impracticable and contrary to the public interest; and that good cause exists for making this order effective upon less than thirty days' notice.

It is ordered,

§ 1033.1474 Third Revised Service Order No. 1474.

(a) Various railroads authorized to use tracks and/or facilities of the Chicago, Milwaukee, St. Paul and Pacific Railroad Company, Debtor, (Richard B. Ogilvie, Trustee). Various railroads authorized to use tracks and/or facilities of the Chicago, Milwaukee, St. Paul and Pacific Railroad Company (MILW), as listed in Appendix A to this order, in order to provide interim service over the MILW.

(b) The Trustee shall permit the affected carriers to enter upon the property of the MILW to conduct service essential to these interim operations.

(c) The Trustee will be compensated on terms established between the Trustee and the affected carrier(s); or upon failure of the parties to agree as hereafter fixed by the Commission in accordance with pertinent authority conferred upon it by Section 122(a) Public Law 96-254.

(d) Interim operators, authorized in Appendix A to this order, shall, within fifteen (15) days of its effective date, notify the Railroad Service Board of the date on which interim operations were commenced on the expected commencement date of those operations.

(e) Interim operators, authorized in Appendix A to this order, shall, within thirty days of commencing operations under authority of this order, notify the MILW Trustee of those facilities they believe are necessary or reasonably related to the authorized operations.

(f) During the period of these operations over the MILW lines, interim operators shall be responsible for preserving the value of the lines, associated with each interim operation, to the MILW estate, and for performing necessary maintenance to avoid undue deterioration of lines and associated facilities.

(g) Any operational or other difficulty associated with the authorized operations shall be resolved through agreement between the affected parties or, failing agreement, by the Commission's Railroad Service Board.

(h) Any rehabilitation, operational, or other costs related to the authorized operations shall be the sole responsibility of the interim operator incurring the costs, and shall not in any way be deemed a liability of the United States Government.

(i) *Application.* The provisions of this order shall apply to intrastate, interstate and foreign traffic.

(j) *Rate applicable.* Inasmuch as this operation by interim operators over tracks previously operated by the MILW is deemed to be due to carrier's disability, the rates applicable to traffic moved over these lines shall be the rates applicable to traffic routed to, from, or via these lines which were formerly in effect on such traffic when routed via MILW, until tariffs naming rates and routes specifically applicable become effective.

(k) In transporting traffic over these lines, all interim operators involved shall proceed even though no contracts, agreements, or arrangements now exist between them with reference to the divisions of the rates of transportation applicable to that traffic. Divisions shall be, during the time this order remains in force, those voluntarily agreed upon by and between the carriers; or upon failure of the carriers to so agree, the divisions shall be those hereafter fixed by the Commission in accordance with pertinent authority conferred upon it by the Interstate Commerce Act.

(l) *Employees*—In providing service under this order interim operators, to the maximum extent practicable, shall use the employees who normally would have performed work in connection with the traffic moving over the lines subject to this Service Order.

(m) *Effective date.* This order shall become effective at 12:01 a.m., July 31, 1980.

(n) *Expiration date.* The provisions of this order shall expire at 11:59 p.m., September 30, 1980, unless otherwise modified, amended, or vacated by order of this Commission.

This action is taken under the authority of 49 U.S.C. 10304-10305 and Section 122, Public Law 96-254.

This order shall be served upon the Association of American Railroads, Car Service Division, as agent of the railroads subscribing to the car service and car hire agreement under the terms of that agreement and upon the American Short Line Railroad Association. Notice of this order shall be given to the general public by depositing a copy in the Office of the Secretary of the Commission at Washington, D.C., and by filing a copy with the Director, Office of the Federal Register.

By the Commission, Railroad Service Board, members Joel E. Burns, Robert S. Turkington and John H. O'Brien.

Agatha L. Mergenovich,

Secretary.

Appendix A

MILW Lines Authorized To Be Operated by Interim Operators

1. Chicago and North Western Transportation Company (CNW):

A. At DeKalb, Illinois.

B. At Appleton, Wisconsin.

C. At Lake Preston, Mitchell, and Sioux Falls, South Dakota, and from Wolsey to but not including Aberdeen, South Dakota.

D. At Miloma and Montgomery, Minnesota.

E. Between Jefferson and Marathon, Jefferson and Waukee, and Manning and Huxley, Iowa.

F. Between Merriam Park and Norwood, Minnesota.

2. Illinois Central Gulf Railroad Company (ICG):

A. Between Cedar Rapids and Louisa, Iowa, including Marion, Iowa.

B. In Sioux City, Iowa, from Pearl Street west approximately 1.5 miles to Tri-View Industrial area, and from Court Street to Virginia Street.

3. Seattle and North Coast Railroad Company (SNC):

A. Between Port Angeles and Port Townsend, Washington, including Pier 27 and associated track in Seattle, Washington.

4. Cedar Rapids and Iowa City Railway Company (CIC):

A. Between Middle Amana and Cedar Rapids, Iowa.

B. Over the Chicago, Rock Island and Pacific Railroad Company trackage—4th Street Corridor—in Cedar Rapids, Iowa, originally operated by MILW under trackage rights.

C. Over certain terminal and industry tracks in Cedar rapids, Iowa, between milepost 86 and milepost 87 in order to serve the 6th Street Power Station.

5. Escanaba and Lake Superior Railroad Company (ELS):

A. Between Iron Mountain, Michigan, and Green Bay, Wisconsin.

6. Consolidated Rail Corporation (CR):

A. At Momence, Illinois.

7. Des Moines Union Railway Company (DMU):

A. Between Des Moines (milepost 0) and Clive (milepost 8.5), Iowa; and between Clive (milepost 0) and Grimes, Iowa, (milepost 7), a total of 15.5 miles.

8. The La Salle and Bureau County Railroad Company (LSBC):

A. From Mendota, Illinois, (milepost 69.5) to Ladd, Illinois, (milepost 82.1), a total of 12.6 miles.

9. Chicago, Madison and Northern Railway Company (CMN):

A. Between Sparta, Wisconsin, (milepost 2.5) and Viroqua, Wisconsin, (milepost 34.7), a distance of approximately 32.2 miles.

B. Between Janesville, Wisconsin, (milepost 10.0) and Mineral Point, Wisconsin, (milepost 90.7), a distance of approximately 80.7 miles.

10. Wisconsin Central Railroad Company (WCRC):

A. Between Waukesha, Wisconsin, (milepost 20.5) and Milton Junction, Wisconsin, (milepost 61.5), a distance of approximately 41.0 miles.

11. Pend Oreille Valley Railroad, Inc., (POV):

A. Between Newport, Washington, (milepost 43.6) and Metaline Falls, Washington, (milepost 104.7), a distance of approximately 61.1 miles.

12. St. Maries River Railroad Company (SMRR):

A. Between St. Maries and Bovill, Idaho, the Bovill Branch, a distance of approximately 52 miles; and between St. Maries and Plummer, Idaho, a distance of approximately 19 miles.

13. Chippewa River Railroad Company (CRRC):

A. Between Eau Claire, Wisconsin, and Durand, Wisconsin, a distance of approximately 33 miles.

14. Wisconsin and Southern Railroad Company (WSR):

A. The following lines in the state of Wisconsin: (1) North Milwaukee (milepost 93.72) to Oshkosh (milepost 187.64).

(2) Horicon (milepost 140.27) to Cambia (milepost 165.7).

(3) Granville (milepost 100.5) to Menomonee Falls (milepost 104).

(4) Iron Ridge (milepost 133) to Mayville (milepost 140).

(5) Beaver Dam Junction (milepost 148.5) to Beaver Dam (milepost 150.5).

(6) Fox Lake Junction (milepost 154.5) to Fox Lake (milepost 156.7).

(7) Brandon (milepost 161.15) to Markesan (milepost 172.7).

15. Burlington Northern Inc. (BN) [1]

A. In Sioux City, Iowa, between milepost 509.77 and milepost 512.62, a distance of approximately 2.85 miles.

[FR Doc. 80-23690 Filed 8-5-80; 8:45 am]

BILLING CODE 7035-01-M

---

49 CFR Part 1033

[Service Order No. 1480]

Distribution of Freight Cars

AGENCY: Interstate Commerce Commission.

ACTION: Service Order No. 1480.

SUMMARY: This order restates the provisions of 19th Revised Service Order No. 1234, which provided for the substitution of smaller cars for larger cars of any type when the larger cars were unavailable. This order is in effect for (60) sixty days to provide carriers with sufficient time to modify tariffs to incorporate the order's provisions.

EFFECTIVE DATE: 12:01 a.m., August 1, 1980, and continuing in effect until 11:59 p.m., September 30, 1980.

FOR FURTHER INFORMATION CONTACT: M. F. Clemens, Jr., (202) 275-7840.

SUPPLEMENTARY INFORMATION:

Decided: July 31, 1980.

There is a shortage of high capacity covered hopper cars for transporting shipments of grain, grain products, and soy beans, caused by certain tariff provisions specifying the minimum quantities that must be loaded into cars offered to the shippers. At the same time smaller cars, suitable except as to capacity, are available for transporting these products. The inability of the carriers and shippers to utilize the smaller capacity cars in place of the larger cars required by tariff provisions is resulting in great economic loss to both shippers and carriers.

Service Order No. 1234 contained provisions which permitted railroads to substitute a sufficient number of smaller cars of any car type for larger cars ordered and which are unavailable to transport various commodities.

This order was based on a continuing freight car shortage of certain type cars, and the inability of carriers to provide the larger cars as ordered and as required by tariffs.

This order provides relief previously granted by provisions of Service Order No. 1234, which was vacated on July 31, 1980. We have concluded that the provisions contained in Service Order No. 1234, and restated in this order, should be resolved by appropriate tariff modifications. This order will remain in effect for (60) sixty days to provide the time necessary for tariffs to be amended to provide the relief herein granted.

In the opinion of the Commission, an emergency exists requiring immediate action to modify existing rules, regulations and practices with respect to car service to secure maximum utilization of the available supply of freight cars and to alleviate shortages of cars. Accordingly, the Commission finds that notice and public procedure are impracticable and contrary to the public interest, and that good cause exists for making this order effective upon less than thirty days' notice.

It is ordered,

§ 1033.1480 Distribution of Freight Cars.

(a) Subject to the concurrence of the carrier and the shipper, carriers may substitute a sufficient number of smaller cars of any car type for larger cars ordered and which are unavailable to transport shipments of numerous commodities, regardless of tariff requirements specifying minimum cubic or weight carrying capacity. (See exceptions).

Exception. This order shall not apply to shipments subject to tariff provisions requiring the use of twenty-five or more per shipment.

Exception. This order shall not apply to shipments subject to tariff provisions which require that cars be furnished by the shipper.

(b) *Rates and Minimum Weights Applicable.* The rates to be applied and the minimum weights applicable to shipments for which cars smaller than those ordered have been furnished and loaded as authorized by Section (a) of this order shall be the rates and minimum weights applicable to the larger cars ordered.

(c) *Billing to be Endorsed.* The carrier substituting smaller cars for larger cars as authorized by Section (a) of this order shall place the following endorsement on the bill of lading and on the waybills authorizing movement of the car:

"Car of ( ) cu. ft. and/or of ( ) lbs. or greater capacity ordered. Smaller cars furnished authority ICC Service Order No. 1480.

(d) *Concurrence of Carrier and Shipper Required.* Smaller cars shall not be furnished in lieu of cars of greater capacity without the consent of the carrier and shipper.

---

[1] Added.

(e) *Exceptions.* Exceptions to this order may be authorized to railroads by the Railroad Service Board, Washington, D.C. 20423. Requests for such exception must be submitted in writing, or confirmed in writing, and must clearly state the points at which such exceptions are requested and the reason therefor.

(f) *Rules and Regulations Suspended.* The operation of all rules, regulations, or tariff provisions is suspended insofar as they conflict with the provisions of this order.

(g) *Application.* The provisions of this order shall apply to intrastate, interstate and foreign commerce.

(h) *Effective date.* This order shall become effective at 12:01 a.m., August 1, 1980.

(i) *Expiration.* The provisions of this order shall remain in effect until September 30, 1980.

This action is taken under the authority of 49 U.S.C. 10304–10305 and 11121–11126.

This order shall be served upon the Association of American Railroads, Car Service Division, as agent of the railroads subscribing to the car service and car hire agreement under the terms of that agreement and upon the American Short Line Railroad Association. Notice of this order shall be given to the general public by depositing a copy in the Office of the Secretary of the Commission at Washington, D.C., and by filing a copy with the Director, Office of the Federal Register.

By the Commission, Railroad Service Board, members Joel E. Burns, Robert S. Turkington and John H. O'Brien.

Agatha L. Mergenovich,

Secretary.

[FR Doc. 80-23697 Filed 8-5-80; 8:45 am]

BILLING CODE 7035-01-M

---

49 CFR Part 1033

[Directed Service Order No. 1398]

Kansas City Terminal Railway Co.—Directed To Operate Over—Chicago, Rock Island & Pacific Railroad Co., Debtor (William M. Gibbons, Trustee); Modification of Cost Data Submission Requirements for Directed Service Operations

Decided: July 29, 1980.

AGENCY: Interstate Commerce Commission.

ACTION: Modification of cost data submission requirements.

SUMMARY: In Directed Service Order No. 1398, pursuant to 49 U.S.C. § 11125, we directed the Kansas City Terminal Railway Company (KCT–DRC) to perform directed operations over the lines of the Chicago, Rock Island & Pacific Railroad Company, Debtor (William M. Gibbons, Trustee) (Rock Island or RI). Our regulations at 49 CFR § 1126.2 set forth the cost form to be filed by directed rail carriers to justify reimbursement for directed service. The form specified in our regulations is not designed to apply to directed service as performed by KCT–DRC. Therefore, we are waiving the requirements of 49 CFR 1126.2 for KCT–DRC's operations over Rock Island under DSO No. 1398 and substituting more applicable reporting requirements.

DATES: This decision shall be effective on August 4, 1980.

FOR FURTHER INFORMATION CONTACT: Richard J. Schiefelbein, (202) 275–0826.

SUPPLEMENTARY INFORMATION: In September 1979, Rock Island's cash flow position became so severe as to prevent continuation of normal rail operations. Therefore, we issued Directed Service Order No. 1398 (44 FR 56343, Oct. 1, 1979) directing KCT–DRC to perform operations over Rock Island lines. KCT–DRC provided a management team which operated Rock Island during the period of directed service under DSO No. 1398. These operations were performed predominantly with Rock Island, rather than KCT–DRC, equipment and employees.

Under 49 U.S.C. § 11125(b)(5), KCT–DRC is entitled to federal payment providing reimbursement for losses incurred as a result of providing directed service, and a reasonable profit. The form for submission of cost data to justify reimbursement is set forth at 49 CFR 1126.2. This cost form is structured for directed service operations which would include a predominance of joint costs. Because of the significantly different nature of the KCT–DRC operations from the type of operations anticipated by our cost submission regulations, we will modify the reporting requirements for KCT–DRC for submission of cost data under DSO No. 1398.

In place of the cost form specified in 49 CFR § 1126.2, KCT–DRC may submit the following reports and statements to justify reimbursement for operations under DSO No. 1398:

1. ICC Quarterly Report of Revenues, Expenses, and Income—Railroads (Form RE&I, 49 CFR 1243.1);

2. ICC Quarterly Condensed Balance Sheet—Railroads (Form CBS, 49 CFR 1243.2); and

3. Source and Application of Funds Statement (Schedule 240, "Statement of Changes in Financial Position" required in the Annual Report R–1).

These reports should cover directed service operations only (not including normal KCT operations) for the directed service period of railroad operations, and related accounting and administrative functions for the period from October 5, 1979, through July 31, 1980. Additionally, KCT–DRC should report estimated costs of all open and unfinished business, or unsettled amounts, including allowable interest and allowance for profit.

This action will not significantly affect either the quality of the human environment or the conservation of energy resources.

It is ordered:

(1) The requirements of 49 CFR 1126.2 are waived with respect to KCT–DRC operations under DSO No. 1398. DSO No. 1398 is modified to include the cost data submission requirements set forth in this decision.

(2) This decision shall be effective on August 4, 1980.

By the Commission, Chairman Gaskins, Vice Chairman Gresham, Commissioners Stafford, Clapp, Trantum, Alexis, and Gilliam.

Agatha L. Mergenovich,

Secretary.

[FR Doc. 80-23782 Filed 8-5-80; 8:45 am]

BILLING CODE 7035-01-M

---

49 CFR Parts 1309 and 1310

[Docket No. 37416]

Identification of Rates Filed Under Zone of Rate Freedom by Motor Common Carriers of Property and Freight Forwarders

AGENCY: Interstate Commerce Commission.

ACTION: Final rules.

SUMMARY: The Interstate Commerce Act, as amended by the Motor Carrier Act of 1980, permits motor common carriers of property and freight forwarders to reduce or increase rates within a 10 percent zone of rate freedom without investigation, suspension, revision, or revocation on the grounds that the changed rate is unreasonable because it is too high or too low. The Act requires that the carriers notify the Commission when they wish to have rates considered under this rate freedom.

This document establishes rules which will set forth the manner in which this notification will be made. The effect on the carriers and forwarders will be minimal since only a small amount of additional wording will be required on

the tariff publications and accompanying letters of transmittal.

EFFECTIVE DATE: August 6, 1980.

FOR FURTHER INFORMATION CONTACT: William P. Geisenkotter, Chief, Section of Tariffs, Bureau of Traffic, Interstate Commerce Commission, Washington, D.C. 20423, (202) 275-7739.

SUPPLEMENTARY INFORMATION: Section 10708 of Title 49, United States Code, was amended by the Motor Carrier Act of 1980 by adding a "Zone of Rate Freedom for Motor Common Carriers of Property and Freight Forwarders" (Subsection (d)). Subsection (d)(1) reads as follows:

(d)(1) Notwithstanding any other provision of this title, the Commission may not investigate, suspend, revise, or revoke any rate proposed by a motor common carrier of property or freight forwarder on the grounds that such rate is unreasonable on the basis that it is too high or too low if—

(A) the carrier notifies the Commission that it wishes to have the rate considered pursuant to this subsection; and

(B) the aggregate of increases and decreases in any such rate is not more than 10 percent above the rate in effect one year prior to the effective date of the proposed rate, nor more than 10 percent below the lesser of the rate in effect on July 1, 1980 (or, in the case of any rate which a carrier first establishes after July 1, 1980, for a service not provided such carrier on such date, such rate on the date such rate first becomes effective), or the rate in effect one year prior to the effective date of the proposed rate.

In addition, for the first two years following the Motor Carrier Act, general rate increases obtained in the one-year period prior to the effective date of the proposed rate shall not be included except to the extent that such general rate increases exceed 5 percent of the rate in effect one-year prior to the effective date of the proposed rate.

It is therefore necessary that the Commission establish rules that will require carriers to furnish sufficient information to allow identification and analysis of rates, charges, and provisions filed under the zone of rate freedom. The adopted rules will accomplish this.

The rules will require carriers and freight forwarders filing rates, charges, or provisions which they wish considered under the zone of rate freedom provisions to show on their tariffs or amendments an appropriate statement. The rates, charges, or provisions must be identified. The carrier or freight forwarder will be required to certify in the letter of transmittal that the rates or provisions do not exceed the amount allowed by section 10708(d)(3) (A or B); and fall within the 10 percent zone; also, if the rate is more than 10 percent above the rate in effect one year earlier, to include in the statement whether the proposed rate has been subject to general rate increases during the previous year, what percent increase was taken, the bureau which published the increase, and the effective date. In addition, the letter of transmittal shall contain an appropriate statement identifying the number of the item (or page) and tariff containing the rate, charge, or provision in effect a year earlier or July 1, 1980 (or later), as appropriate. The letter shall also state that the rate, charge, or provision was independently established by an individual carrier.

The Commission does not believe this revision requires notice and comment rulemaking under section 553 of the Administrative Procedure Act (5 U.S.C. 553) because it merely establishes notification procedures mandated by Congress and thus is only a procedural and not a substantive rule. Indeed, this will impose a very minor burden on the carriers who will benefit over all from the zone of rate freedom.

This decision does not affect significantly either the quality of the human environment or energy resources.

It is ordered: 1. Chapter X of Title 49 of the Code of Federal Regulations is amended as set forth in the appendix below.

2. Notice of this decision will be given to the public by depositing a copy in the Office of the Secretary, Interstate Commerce Commission, Washington, D.C. 20423, for public inspection, and by delivering a copy to the Director, Office of the Federal Register as notice to all interested persons.

This decision is issued under authority of section 10762 of the Interstate Commerce Act, U.S.C. 10762, and under section 553 of the Administrative Procedure Act, 5 U.S.C. 553.

Decided: July 15, 1980.

By the Commission, Chairman Gaskins, Vice Chairman Gresham, Commissioners Stafford, Clapp, Trantum, Alexis and Gilliam.

Agatha L. Mergenovich,

Secretary.

PART 1309—TARIFFS AND CLASSIFICATIONS OF FREIGHT FORWARDERS

Part 1309 is amended by adding § 1309.8 as follows:

§ 1309.8 Zone of rate freedom.

(a) *Statement of carrier's intent required.* Each tariff, supplement, or loose-leaf page publishing a rate, charge, or provision which the freight forwarder wishes to have considered pursuant to the zone of rate freedom provisions of subsection (d) of section 10708 of Title 49, United States Code, shall indicate this by showing an appropriate statement. If a bound tariff or supplement, the statement shall be shown on the title page. Each rate, charge, or provision shall be identified. If the rates, charges, or provisions in a bound tariff or supplement are too numerous to be identified on the title page, identification shall be on the first printed page following the title page.

(b) *Letters of transmittal.* (1) The letter of transmittal accompanying each tariff, supplement, of loose-leaf page which contains a rate, charge, or provision which the freight forwarder wishes to have considered pursuant to the zone of rate freedom provisions of subsection (d) of section 10708 of Title 49, United States Code, shall indicate this by including an appropriate statement.

(2) If the application of the proposed rate, charge, or provision would result in an increase in charges, the letter shall state that the proposed increase in the aggregate is not more than 10 percent above that in effect 1 year prior to the effective date of the proposed increase.

(3) If the application of the proposed rate, charge, or provision would result in a reduction in charges, the letter shall state that the proposed reduction in the aggregate shall be no more than 10 percent below the lesser of that in effect on July 1, 1980 (or the date, if after July 1, 1980, on which a rate, charge, or provision first became effective for a service not provided by the freight forwarder on July 1, 1980), or that in effect 1 year prior to the effective date of the proposed reduction.

(4) The letter shall identify the number of the item (or page) and tariff in which the rate, charge, or provision may be found that was in effect 1 year prior to the effective date of the proposed or in effect July 1, 1980, or later, as appropriate.

(5) The letter shall also state that the rates or provisions were set independently and were not discussed with any other carriers. If published by a rate bureau, the letter shall state that the docketing and publishing of the rate or provision were done in compliance with its agreement regarding independent notice actions.

(6) The freight forwarder will also be required in the letter to certify that the rates or provisions do not exceed the amount allowed by section 10708 (d)(3) (A or B); and that the rates or provisions fall within the 10 percent zone; also, if the rate is more than 10 percent above the rate in effect one year earlier, to include in the statement whether the

proposed rate has been subject to general rate increases during the previous year, what percent increase was taken, the bureaus which published the increase, and the effective date.

(Sec. 20, 24 Stat. 386, as amended; secs. 204, as amended, 217, as amended, 219, as amended, 49 Stat. 546, as amended, 560, as amended, 563, as amended, secs. 403, 405, 413, 56 Stat. 285, 287, 295; 49 U.S.C. 20, 304, 317, 319, 1003, 1005, 1013)

PART 1310—FREIGHT RATE TARIFFS AND CLASSIFICATIONS OF MOTOR COMMON CARRIERS

Section 1310.1(c) is amended by adding subparagraph (6) to paragraph (c) as follows:

§ 1310.1 Filing tariffs (Rule 1).

* * * * *

(c) * * *

(6)(i) The letter of transmittal accompanying each tariff publication which contains a rate, charge, or provision which the carrier wishes to have considered pursuant to the zone of rate freedom provisions of subsection (d) of section 10708 of Title 49, United States Code, shall indicate this by including an appropriate statement.

(ii) If application of the proposed rate, charge, or provision would result in an increase in charges, the letter shall state that the proposed increase in the aggregate is not more than 10 percent above that in effect 1 year prior to the effective date of the proposed increase.

(iii) If the application of the proposed rate, charge, or provision would result in a reduction in charges, the letter shall state that the proposed reduction in the aggregate shall be no more than 10 percent below the lesser of that in effect on July 1, 1980 (or the date, if after July 1, 1980, on which a rate, charge, or provision first became effective for a service not provided by the carrier on July 1, 1980), or that in effect 1 year prior to the effective date of the proposed reduction.

(iv) The letter shall identify the number of the item (or page) and tariff in which the rate, charge, or provision may be found that was in effect 1 year prior to the effective date of the proposed reduction or in effect July 1, 1980, or later, as appropriate.

(v) The letter shall also state that the rates or provisions were set independently and were not discussed with any other carriers. If published by a rate bureau, the letter shall state that the docketing and publishing of the rate or provision were done in compliance with its agreement regarding independent notice actions.

(vi) The carrier will also be required in the letter to certify that the rates or provisions do not exceed the amount allowed by section 10708 (d)(3) (A or B) and that the rates or provisions fall within the 10 percent zone; also, if the rate is more than 10 percent above the rate in effect one year earlier, to include in the statement whether the proposed rate has been subject to general rate increases during the previous year, what percent increase was taken, the bureau which published the increase, and the effective date.

* * * * *

§ 1310.4(f) is amended by adding subparagraph (6) to paragraph (f) as follows:

§ 1310.4 Form, size, and printing (Rule 4).

* * * * *

(f) * * *

(6) Each loose-leaf page (original or revised) publishing a rate, charge, or provision which the carrier wishes to have considered pursuant to the zone of rate freedom provisions of subsection (d) of section 10708 of Title 49, United States Code, shall indicate this by showing an appropriate statement. The rate, charge, or provision shall be identified.

* * * * *

§ 1310.5 is amended by adding paragraph (m) as follows:

§ 1310.5 Title page original tariffs (Rule 5).

* * * * *

(m) *Zone of rate freedom statement.* Each tariff (or supplement) publishing a rate, charge, or provision which the carrier wishes to have considered pursuant to the zone of rate freedom provisions of subsection (d) of section 10708 of Title 49, United States Code, shall indicate this by showing an appropriate statement on the title page. Each rate, charge, or provision shall be identified. If the rates, charges, or provisions are too numerous to be identified on the title page, identification shall be on the first printed page following the title page.

(Secs. 204, 217, 49 Stat. 546, as amended, 560, as amended, sec. 210a, an amended, 52 Stat. 1238, as amended, 49 U.S.C. 304, 317, 310a)

[FR Doc. 80-23602 Filed 8-5-80; 8:45 am]
BILLING CODE 7035-01-M

DEPARTMENT OF THE INTERIOR

Fish and Wildlife Service

50 CFR Part 32

National Wildlife Refuges in Mich., Ohio, Ill., Iowa, Minn., and Wis.

AGENCY: Fish and Wildlife Service.

ACTION: Special Regulations.

SUMMARY: Migratory game bird hunting on certain National Wildlife Refuges has been determined by the Director to be compatible with the objectives for which the areas were established, will utilize a renewable resource, and will provide additional recreational opportunity to the public.

DATES: Effective August 6, 1980, for the duration of the 1980–81 migratory game bird season. See individual refuge and respective State regulations for exact dates.

FOR FURTHER INFORMATION CONTACT: The appropriate Area Manager or Refuge Manager at the address or telephone number listed below:

John S. Popowski, Area Manager, U.S. Fish and Wildlife Service, 202 Manly Miles Building, 1405 S. Harrison Road, East Lansing, Michigan 48823. Telephone: (517) 337–6608. Responsible for the Seney, Shiawassee and Ottawa National Wildlife Refuges.

George G. P. Bekeris, Area Manager, U.S. Fish and Wildlife Service, 530 Federal Building and U.S. Court House, 316 North Robert Street, St. Paul, Minnesota 55101. Telephone: (612) 725–7641. Responsible for the Chautauqua, Crab Orchard, Mark Twain (Big Timber Division), Sherburne, Tamarac and Upper Mississippi River National Wildlife Refuges.

John R. Frye, Refuge Manager, Seney National Wildlife Refuge, Seney, Michigan 49883. Telephone: (906) 586–9851.

Robert S. Johnson, Refuge Manager, Shiawassee National Wildlife Refuge, 6975 Mower Road, RR No. 1, Saginaw, Michigan 48601. Telephone: (517) 777–5930 or (517) 777–5910.

Leland E. Herzberger, Refuge Manager, Ottawa National Wildlife Refuge, 14000 W. State Route 2, Oak Harbor, Ohio 43449. Telephone: (419) 898–0014.

Thomas S. Sanford, Refuge Manager, Chautauqua National Wildlife Refuge, RR No. 2, Havana, Illinois 62644. Telephone: (309) 535–2290.

Wayne D. Adams, Refuge Manager, Crab Orchard National Wildlife Refuge, P.O. Box J, Carterville, Illinois 62918. Telephone: (618) 997–3344.

Howard Lipke, Refuge Manager, Mark Twain National Wildlife Refuge, Great River Plaza, 311 N. Fifth Street, Suite 100, Quincy, Illinois 62301. Telephone: (217) 224–8580.

Ronald Papike, Refuge Manager, Sherburne National Wildlife Refuge, Route No. 2, Zimmerman, Minnesota 55398. Telephone: (612) 389–3323.

Omer N. Swenson, Refuge Manager, Tamarac National Wildlife Refuge,

Rural Route, Rochert, Minnesota 56578. Telephone: (218) 847-4355.

Robert Howard, Refuge Manager, Upper Mississippi River Wildlife and Fish Refuge, 122 W. 2nd Street, Winona, Minnesota 55987. Telephone: (507) 452-4232.

SUPPLEMENTARY INFORMATION: Hunting migratory game birds on portions of the following refuges shall be in accordance with all applicable State and Federal regulations, subject to the additional special regulations and conditions as indicated. Portions of refuges which are open to migratory game bird hunting are designated by signs and/or delineated on maps. Special conditions applying to individual refuges and maps are available at refuge headquarters or from the respective Office of the Area Manager (addresses listed above).

The Refuge Recreation Act of 1962 (16 U.S.C. 460k) authorizes the Secretary of the Interior to administer such areas for public recreation as an appropriate incidental or secondary use only to the extent that it is practicable and not inconsistent with the primary objectives for which the area was established. In addition, the Refuge Recreation Act requires (1) that any recreational use permitted will not interfere with the primary purpose for which the area was established; and (2) that funds are available for the development, operation, and maintenance of the permitted forms of recreation.

The recreational use authorized by these regulations will not interfere with the primary purposes for which these National Wildlife Refuges were established. This determination is based upon consideration of, among other things, the Service's Final Environmental Statement on the Operation of the National Wildlife Refuge System published in November 1976. Funds are available for the administration of the recreational activities permitted by these regulations.

§ 32.12 Special regulations; hunting migratory game birds; for individual wildlife refuge areas.

Michigan

Seney National Wildlife Refuge

Public hunting of Woodcock and Wilson's Snipe (Jacksnipe) is allowed subject to the following special condition:

Hunting is permitted on 33,525 acres of the refuge designated as Area B from September 15 through November 12.

Shiawassee National Wildlife Refuge

The State of Michigan has established a quota harvest for the Saginaw County Goose Management Area of which the refuge is a part. The season will be closed early should the quota be reached.

Posting the area "Closed" is required and is done unilaterally by both the Service and the State.

Public hunting of *geese only* is permitted on areas comprising 1,350 acres subject to the following special conditions:

(1) Hunting shall be by federal permit and only from assigned blinds or pits. Blind assignments will be determined by drawings each day.

(2) Permit application cards for hunting from season opening (concurrent with State of Michigan) until the end of October must be sent to Shiawassee Refuge on or before September 15, 1980. Only successful applicants will be notified.

(3) For the month of November a daily public drawing will be held to determine who may hunt during that day. Applicants must be present for each days drawing and need not have a permit card to participate in the drawing for blind selection.

(4) Goose hunting will be on odd days only throughout the entire season.

(5) Only non-toxic steel shot will be permitted. The limit is 12 shells per hunter.

(6) Hunters may not have shotgun shells containing lead or other toxic shot in their possession.

(7) A blind rental fee of $2.00/hunter is required. Decoys can be rented for $1.00/dozen.

(8) After completion of the days hunt, all hunters must proceed to refuge headquarters for check-out and the submission of geese for examination.

Ohio

Ottawa National Wildlife Refuge

Public hunting of Canada, snow (including blue color phase) and white-fronted geese is permitted, on an area encompassing 640 acres, subject to the following special conditions:

(1) Hunting shall be by State permit and only from assigned blinds. Blind assignments will be determined by drawings.

(2) A fee of five dollars per hunter will be required for blind rental.

(3) No more than two persons per blind (permit holder and one guest) are permitted.

(4) Hunters must report to the check station at least one hour before legal shooting time.

(5) Each hunter may possess not more than 10 shells. Only nontoxic steel shot, sizes no larger than No. 1, will be permitted. Hunters may not have shotgun shells containing lead or other toxic shot in their possesion.

(6) Hunters will be permitted to pursue and shoot downed geese only within 75 yards of their assigned blind.

(7) Hunting hours shall be from the legal opening time in the morning until 12 noon.

(8) All hunters must be out of their assigned blinds by 1:00 P.M.

(9) All hunters must report to the check station and submit their geese for examination by 2:00 P.M.

(10) The use of trained dogs to retrieve downed geese within the hunting area is permitted.

Illinois

Chautauqua National Wildlife Refuge

Public hunting of migratory game birds is permitted only on areas, designated by signs, comprising 745 acres, subject to the following special conditions:

(1) Blinds—No permanent structure, excluding wood or brush duck blinds shall be permitted; no blinds shall be locked or otherwise sealed against public entry.

(2) Use of steel shot is required for hunting waterfowl and coots. Possession of lead shot shells while hunting waterfowl and coots is prohibited.

Crab Orchard National Wildlife Refuge

Public hunting of migratory game birds is permitted, on areas comprising 23,000 acres, designated as Areas I and III, subject to the following special conditions:

(1) Only portable or temporary blinds located on the immediate vicinity of the site may be used for hunting and these must be removed or dismantled at the end of the day's hunt. Blinds and pits beyond the shoreline of refuge waters may not be constructed, established, occupied or used.

(2) Use of steel shot is required for hunting waterfowl and coots. Possession of lead shot shells while hunting waterfowl and coots is prohibited.

(3) During the goose season, on Grassy, Orchard, Sawmill and Turkey Islands, hunters may hunt only from blinds provided by the refuge. Only hunters occupying these blinds are allowed on these islands during the goose hunting season.

(4) Only authorized waterfowl hunting is permitted on the controlled areas of Grassy Point, Carterville Public, and Greenbriar Road Areas from sunrise to 12:00 Noon daily during the goose season. Goose hunting on these areas is subject to the following conditions:

(a) Hunting is permitted only from existing refuge established blinds. This includes lake shorelines.

(b) Hunters must comply with all rules as posted.

Iowa

Mark Twain National Wildlife Refuge

Public hunting of migratory game birds is permitted, on areas designated by signs, comprising 1,760 acres on the Big Timber Division and Turkey Island Area, subject to the following special conditions:

(1) Blinds—no permanent structure; excluding wood or brush duck blinds, shall be permitted; no blinds shall be locked or otherwise sealed against public entry.

Minnesota

Sherburne National Wildlife Refuge

Public hunting of ducks, coots, rails, Wilson snipe and woodcock is permitted, on an area comprising 8,514 acres (designated as Area B on refuge map), subject to the following special conditions:

(1) Use of steel shot is required for hunting ducks and coots. Possession of lead shot shells while hunting ducks and coots is prohibited.

(2) Field possession of migratory birds in the refuge area closed to migratory bird hunting is prohibited.

(3) Only boats without motors will be permitted in the area open to the hunting of ducks and coots.

(4) Boats and decoys must be removed from the refuge at the end of each day.

Tamarac National Wildlife Refuge

Public hunting of ducks, geese and coots is permitted, on an area comprising approximately 12,500 acres, subject to the following special conditions:

(1) Use of steel shot is required for hunting waterfowl and coots. Possession of lead shot shells while hunting waterfowl and coots is prohibited.

(2) The use of dogs to retrieve downed waterfowl and coots is permitted and encouraged.

(3) Boats are permitted for waterfowl hunting.

Illinois, Iowa, Minnesota, Wisconsin

Upper Mississippi River Wild Life and Fish Refuge

Public hunting of migratory game birds is permitted where designated subject to the following conditions:

(1) Use of steel shot is required for hunting waterfowl and coots. Possession of lead shot shells while hunting waterfowl and coots is prohibited.

(2) The use of dogs for hunting and retrieving waterfowl is permitted, provided such dogs are under control at all times.

(3) The Illinois portion of the refuge is open for teal hunting as provided by "Illinois State Teal Regulations". Hunters may hunt during the special teal season from other than established waterfowl hunting blinds or small boats.

(4) The hunting of migratory waterfowl in the Illinois portion of the refuge, pools 12, 13, and 14 including Potter's Marsh is governed by special conditions which are hereby adopted and are available from the Refuge Manager, Upper Mississippi River Wild Life and Fish Refuge, Savanna District, P.O. Box 250, Savanna, Illinois 61074.

This special regulation supplements the regulations which govern hunting on wildlife refuge areas generally, which are set forth in Title 50, Code of Federal Regulations, Part 32.

The public is invited to offer suggestions and comments at any time.

Harvey K. Nelson,

Regional Director.

July 29, 1980.

[FR Doc. 80-23630 Filed 8-5-80; 8:45 am]

BILLING CODE 4310-55-M

Proposed Rules

Federal Register
Vol. 45, No. 153
Wednesday, August 6, 1980

This section of the FEDERAL REGISTER contains notices to the public of the proposed issuance of rules and regulations. The purpose of these notices is to give interested persons an opportunity to participate in the rule making prior to the adoption of the final rules.

DEPARTMENT OF THE TREASURY

Office of the Comptroller of the Currency

12 CFR Ch. I

[Docket No. 80-7]

Improving Government Regulations; Semiannual Agenda

AGENCY: Office of the Comptroller of the Currency, Department of the Treasury.

ACTION: Semiannual agenda.

SUMMARY: The semiannual agenda, implementing the President's Executive Order 12044 to improve government regulations, provides notice to the public of the Office of the Comptroller of the Currency's (Office) regulatory actions since February 1, 1980, including projects initiated or acted upon since that date, and projects on which action is expected during the next six months. In addition, this semiannual agenda discusses the Office's Information Collection Budget, Banking Bulletins and Circulars and other matters. The principal functions of the Office are chartering, examining, supervising and regulating national banks.

ADDRESS: Comments should be sent to Docket No. 80-7, Communications Division, 3rd Floor, Office of the Comptroller of the Currency, 490 L'Enfant Plaza East, S.W., Washington, D.C. 20219, Attention: Marie Giblin. Comments will be available for inspection and photocopying. Suggestions for additional projects are welcome.

FOR FURTHER INFORMATION CONTACT: Alan Herlands, Director, Shela Turpin, Bank Analyst, Jonathan Levin, Senior Attorney, or David G. Hayes, Senior Economic Advisor, Regulations Analysis Division. Telephone: (202) 447-1177. Questions concerning specific projects discussed in this semiannual agenda may also be directed to the knowledgeable officials identified with each one as set forth below.

SUPPLEMENTARY INFORMATION: This agenda is divided into 6 sections which discuss the following topics: I—Regulations likely to be subject to review or other action within the next 6 months; II—Regulations issued or amended in final form within the last 6 months; III—Banking Bulletins and Circulars; IV—Information Collection Budget; V—Impact of selected regulations; and VI—Mailing schedules for Office issuances. Prior agenda have included only the information contained in Sections I and II. This agenda has been expanded to further enhance public participation in Office activities relating to the costs and benefits of bank regulation and supervision.

Regulations Discussed in Section I are

12 CFR Part 1—Investment securities regulation
12 CFR Part 2—Disposition of credit life insurance income
12 CFR Part 4—Description of office procedures, public information [1]
12 CFR Part 5—Supplemental application procedures
12 CFR Part 7—Interpretive rulings
12 CFR Part 8—Assessment of fees [1]
12 CFR Part 9—Fiduciary powers of national banks and collective investment funds
12 CFR Part 11—Securities Exchange Act disclosure rules
12 CFR Part 13—Employee stock option and stock purchase plans [1]
12 CFR Part 14—Changes in capital structure [1]
12 CFR Part 15—Change in bank control [1]
12 CFR Part 17—Required notification to nominate bank directors
12 CFR Part 20—International operations
12 CFR Part 21—Minimum security devices and producers for national and District banks
12 CFR Part 25—Community Reinvestment Act
12 CFR Part 28—Federal branches and agencies of foreign banks. [1]
Unassigned-Adjustable rate mortgages

Regulations Discussed in Section II are

12 CFR Part 4—Description of office, procedures, public information.
12 CFR Part 7—Interpretive rulings.
12 CFR Part 16—Securities offering disclosure circulars.
12 CFR Part 26—Management interlocks.

Section I: Action Expected

12 CFR Part 1—Investment securities regulation.

On December 16, 1979, the Comptroller announced that individual rulings under this regulation over the last seventeen years would be reviewed for the purpose of developing a general set of principles with respect to decisions concerning a national bank's ability to purchase, deal in, underwrite or hold securities (44 FR 76263). The purpose of this project is to decrease the need for individual banks to seek specific rulings and to decrease the need for attorneys to provide individual banks with detailed legal research. An advance notice of proposed rulemaking was issued on January 28, 1980, and comments closed March 7, 1980. A proposed rule is expected shortly (45 FR 6407).

For further information, contact Radcliffe Park, Assistant Director or Raija Bettauer, Attorney, Legal Advisory Services Division. Telephone (202) 447-1880.

12 CFR Part 2—Disposition of Credit Life Insurance income

On January 4, 1980, the Federal Financial Institutions Examination Council (FFIEC), on behalf of its member agencies, which include this Office, issued a joint notice of a proposed policy statement on this subject. Comments closed March 31, 1980. The proposed policy differs somewhat from the Office's present regulation. The Office may review the regulation after consideration by the FFIEC (45 FR 1152).

For further information, contact Ford Barrett, Assistant Chief Counsel, Telephone (202) 447-1896.

12 CFR Parts 4, 5, 8, 13, 14, 15, and 28—Comprehensive Review of Corporate Activities and Application Procedures

These regulations cover many significant aspects of applications for national bank corporate and structural activities. The Office has undertaken a long-term project to review the regulations, policy statements, procedures and forms. A major consolidation of those provisions under Part 5, and proposals to amend certain requirements, are expected shortly. Related regulations currently include:

12 CFR Part 4—Description of office, procedures, public information (describes, in part, basic information for filing a number of forms, including national bank charters, branches, conversions, mergers, changes in location, changes in title, changes in capital structure, fiduciary powers,

[1] Action expected is described under 12 CFR Part 5.

domestic operating subsidiaries, voluntary liquidations, receiverships and conservatorships, and federal branches and agencies of foreign banks); *12 CFR Part 5—Supplemental application procedures* (describes procedures for giving notice of applications, opportunities for interested parties to be heard, and related matters concerning applications); *12 CFR Part 8—Assessment of fees* (establishes fees for examinations, charter applications and other national bank activities); *12 CFR Part 13—Employee stock option and stock purchase plans* (describes procedures and conditions for the Office approval of bank applications for such plans); *12 CFR Part 14—Changes in capital structure* (describes procedures and conditions for the Office's approval of applications for authorized but unissued stock, stock dividends, preferred stock, subordinated notes and debentures, and other increases in common stock); *12 CFR Part 15—Change in bank control* (requires that individuals seeking to acquire control of a national bank give the Office 60 days advance notice, within which time the Office may disapprove the acquisition); and *12 CFR Part 28—Federal branches and agencies of foreign banks* (describes, among other matters, applications for federally chartered branches and agencies of foreign banks in the United States).

For further information, contact Darrell W. Dochow, Deputy Director, Bank Organization and Structure Division. Telephone (202) 447-1184.

12 CFR Part 7—Interpretive Rulings

Definition of capital (7.1100). The Office is reviewing this ruling to determine whether accounts other than shareholders' equity should continue to be included in the definition of capital for determining statutory limitations on certain national bank activities. The amount of a bank's defined capital affects the maximum which it may lend to a single entity or group of related entities, the amount of investment securities of a single issuer it may hold, other borrowing and investment limits, and branching capabilities. A notice of proposed rulemaking was issued July 24, 1980, with comments due on or before October 24, 1980 (45 FR 49276, Docket No. 80-6).

For further information, contact Robert B. Norris, National Bank Examiner. Telephone (202) 447-1786.

Other real estate owned (7.3025). The Office is reviewing the implementation of this recently revised ruling to determine if additional revisions would be appropriate. A final amendment which would take advantage of the new flexibility provided under the Depository Institutions Deregulation and Monetary Control Act (Pub. L. 96-221) by granting national banks greater leeway in the disposition of "other real estate" is expected shortly. In addition, a proposal is being developed to establish a uniform definition of "real estate" for all national banks. Currently, state law applies.

For further information, contact Alan Priest, Attorney, Legal Advisory Services Division. Telephone (202) 447-1880.

Investment in bank premises (7.3100). In January 1978, the Office issued for comment a proposed amendment to this interpretive ruling in order to provide greater consistency with revisions to generally accepted accounting principles. This change should not affect the costs to national banks in preparing their financial statements and should make the financial statements more useful to the banks themselves, the Office, and public users of national bank financial statements. A final interpretation is expected shortly (43 FR 2731).

For further information, contact Charles Byrd, Assistant Director, Legal Advisory Services Division. Telephone (202) 447-1880.

Data processing services (7.3500). On June 16, 1980, the Office issued an advance notice of proposed rulemaking soliciting comments on the extent to which this ruling accommodates national bank data processing activity in the face of recent major technological advances. Information about the current level of national bank involvement in data processing is being expressly sought from equipment manufacturers and users, suppliers of data processing services, banks and the general public. A proposal is expected by year-end (45 FR 40613, Docket No. 80-1).

For further information, contact Sharon Miyasato or David Ansell, Attorneys, Legal Advisory Services Division. Telephone (202) 447-1880.

Oath of directors (7.4415). The Office is considering amending this ruling to eliminate the requirement that national bank directors who are not residents of the state in which a majority of the board resides take their oath of office in their home state. If so amended, the ruling would permit all directors present at the first meeting of a board of directors, after its election, to take a joint oath.

For further information, contact Karen Main, Economist, Regulations Analysis Division. Telephone (202) 447-1177.

Indemnification (7.5217). The Office is reviewing this ruling which sets forth the conditions under which a national bank may indemnify bank directors and personnel. Alternatives to be considered include standards reflected in relevant state laws regarding indemnification and/or in the Model Business Corporation Act. An advance notice of proposed rulemaking was published on February 6, 1980, and comments closed on April 7, 1980. A proposed rule is expected within three months (45 FR 8025).

For further information, contact Raija Bettauer, Attorney, Legal Advisory Services Division. Telephone (202) 447-1880.

Loans originating at other than banking offices (7.7380). The U.S. Circuit Court of Appeals for the District of Columbia on June 11, 1980, reversed the district court ruling in *Independent Bankers Association of America v. Heimann,* which had ordered rescission of the Office's interpretive ruling regarding loans originated at other than banking offices (so called "loan production offices") (44 FR 29038). Pursuant to the Circuit Court's reversal, the Office is considering revoking the rescission of Interpretive Ruling 7.7380 and reinstating it in the precise language of the original.

Activities which would come within the terms of this ruling could be conducted either directly by a national bank or by a national bank subsidiary.

For further information, contact David L. Ansell, Attorney, Legal Advisory Services Division. Telephone (202) 447-1880.

Charitable foundations (7.7445). This ruling permits national banks to establish and contribute to charitable foundations. It does not cover foundations to which a national bank grants, in effect, the right to receive income for a specified period from assets (commonly securities) owned by the bank, although the Office has approved such foundations upon request under certain conditions. An amendment to the ruling is expected to be proposed to establish guidance in this area.

For further information, contact Fred Finke, National Bank Examiner, Commercial Examinations Division. Telephone (202) 447-1164.

Charitable contributions (7.7479). This ruling limits the amount which a national bank may contribute to charity on a semi-annual basis to five percent of income as reported on call reports to the Comptroller. The Office is reviewing this interpretation in connection with the review of charitable foundations (7.7445) to determine whether any modifications or guidance are necessary. Subjects under consideration include defining the term charitable, aggregating

contributions to charitable trusts and other charities, and modifying or removing the five percent limitation.

For further information, contact Fred Finke, National Bank Examiner, Commercial Examinations Division. Telephone (202) 447-1164.

Bank indebtedness—leasing (7.7520). In January 1978, the Office issued for comment a proposed interpretive ruling to provide greater consistency with revised generally accepted accounting principles for national banks which lease their banking premises. A final interpretation should be issued shortly. It should not affect the costs to national banks in preparing their financial statements and should make the financial statements more useful to the banks themselves, the Office, and the public users of national bank financial statements (43 FR 2731).

For further information, contact Charles Byrd, Assistant Director, Legal Advisory Services Division. Telephone (202) 447-1880.

Single premium annuities. On July 27, 1979, the Office published an advance notice of proposed rulemaking requesting comment concerning national bank participation in insurance company offerings of single premium annuity contracts which would utilize deposit accounts in national banks (44 FR 44172).

A preliminary review of the comments revealed significant legal and supervisory issues regarding the permissibility of this activity for national banks. Further review and analysis is being undertaken to determine whether the rulemaking process will continue, and a decision is expected shortly.

For further information, contact Howard Finkelstein, Attorney, Legal Advisory Services Division. Telephone (202) 447-1880.

12 CFR Part 9—Fiduciary Powers of National Banks and Collective Investment Funds

The Office is developing a proposal which would require national banks to prepare and make available a disclosure statement with respect to accounts over which investment discretion may be exercised. The statement would set forth policies and practices concerning commissions paid for effecting securities transactions. This proposal would be issued pursuant to Section 28(e) of the Securities Exchange Act of 1934 and follows the recent adoption of rules by the Securities and Exchange Commission.

The Office is also developing a possible amendment to the regulation to clarify certain sections and incorporate interpretations, previously provided to individual national banks upon request, relating to collective investment funds. The proposal also will contain amendments accommodating new statutory authority to revoke national bank trust powers, solicit public suggestions for review or revision of other sections of Part 9, and contain proposed rules relating to deposits of trust funds awaiting investment or distribution and retention rules for fiduciary records.

For further information, contact Dean E. Miller, Deputy Comptroller for Specialized Examinations. Telephone (202) 447-1731.

12 CFR Part 11—Securities Exchange Act Disclosure Rules

On June 4, 1979, the Office announced a long-term project to clarify and simplify this regulation in stages. The first proposal, dealing with tender offers, is expected within 6 months.

This part contains regulations substantially similar to those issued by the Securities and Exchange Commission (SEC). Periodically, the SEC revises its regulations, and the Office must propose substantially similar revisions or publish reasons why such revisions are not appropriate (44 FR 31984).

For further information, contact David Anderson, Attorney, or Michael Herrick, Attorney, Securities Disclosure Division. Telephone (202) 447-1954.

12 CFR Part 17—Required Notification To Nominate Bank Directors

This regulation states that national banks may adopt bylaws or articles of association that require any shareholder proposing to nominate a director, other than a management nominee, to file certain information in advance with the Office and the bank. Particularly in light of recent amendments to the Change in Bank Control rules (12 CFR Part 15), the Office is considering a proposal to rescind this regulation. A notice of proposed rulemaking was published in the Federal Register on April 14, 1980 and comments closed June 13, 1980. A final rule is expected within three months (45 FR 2578).

For further information, contact Larry Mallinger, Attorney, Legal Advisory Services Division. Telephone (202) 447-1880.

12 CFR Part 20—International Operations

This regulation requires prior notifications and reports to the Office of specified international activities by national banks. The need for receipts of those notices and reports from national banks is under review, since they are also filed with other Federal agencies.

For further information, contact William Ryback, Director, International Banking Activity Examination Division. Telephone (202) 447-1747.

12 CFR Part 21; 12 CFR 7.5225—Minimum Security Devices and Procedures

The Office's existing regulation requires several specific reports and records, refers to effective dates long past, overlaps with an interpretive ruling, and contains unnecessary gender-specific terminology. The Office is considering ways to eliminate certain reporting and recordkeeping requirements, the now meaningless effective dates, and the gender-specific terminolgoy. A proposed amendment, or a more general advance notice of proposed rulemaking, is expected to be issued for comment.

For further information, contact Richard C. Wanlin, Special Assistant to the Chief National Bank Examiner. Telephone (202) 447-1574.

12 CFR Part 25—Community Reinvestment Act

This regulation, and identical ones of three other federal supervisors of depository institutions, took effect in February 1979. The Office, in association with the other agencies, is evaluating more than a year's experience with the regulation. That evaluation is wide-ranging and includes consideration of such issues as: (1) Supplementing the previously issued list of questions and answers to clarify issues that do not individually justify amending the regulation; (2) issuing a policy information statement on the agencies' experiences during the first year of CRA's operation; (3) providing "plain-English" instructions to the public on how to comment on CRA-covered applications; (4) discussing alternative definitions for low-and moderate-income neighborhoods; and (5) assigning weights to the various assessment factors the agencies consider in appraising CRA performance.

For further information, contact Janice Booker, Customer Program Specialist, Customer Programs Division. Telephone (202) 287-4265.

Adjustable Rate Mortgages

The Office is considering adding a new regulation which would affirmatively authorize national banks to make residential mortgage loans carrying an interest rate subject to periodic adjustment. Authorization is intended to help ensure the availability of long-term mortgage funds by

facilitating development of new instruments and to provide borrower protection provisions in the form of mandatory disclosures and rules designed to prevent too rapid an increase in installment payment amounts. A proposal is expected within 2 months.

For further information, contact Jonathan L. Fiechter, Deputy Director, Banking Research and Economic Analysis. Telephone (202) 447-1914.

Section II: Actions Taken

12 CFR Part 4—Description of Office, Procedures, Public Information

Office organization. On March 24, 1980, the Office published a final rule which incorporates into this regulation changes in the organization of the Office. Changes in the central office structure, title changes of key positions, revisions in functional descriptions as well as additions and updates of Regional Office information were included (45 FR 18906).

For further information, contact Barbara M. Yadley, Attorney, Legal Advisory Servcies Division. Telephone (202) 447-1880.

Forms. On July 25, 1980, the Office also published a final rule which incorporates into this Part a revised list of those forms used for, among other matters, corporate applications and the solicitation of data (45 49537, Docket No. 80-4).

For further information, contact Jonathan Levin, Senior Attorney, Regulations Analysis Division. Telephone (202) 447-1177.

12 CFR Part 7—Interpretive Rulings

Application of lending limits to standby letters of credit (7.1160). In the past, the Comptroller issued several informal opinions which allowed banks to meet the requirements of exception (2) of Interpretive Ruling 7.1160—"Prior to or at the time of issuance, the issuing bank has set aside funds in a segregated deposit account, clearly earmarked for that purpose, to cover the bank's maximum liability under the standby letter of credit."—with collateral in the form of United States Government securities or "marketable securities." the Prior Semiannual Agenda indicated that position would be reviewed.

After review, and consultations with the staffs of the Federal Reserve Board and Federal Deposit Insurance Corporation, the Office determined that a strict construction of exception (2)—"segregated deposit"—should be adopted. The Comptroller's Chief Counsel, in a letter dated June 12, 1980, stated that the exception would be restricted to cash and short-term certificates of deposit and that prior inconsistent opinions which permitted U.S. Government and "marketable securities" were withdrawn.

For further information, contact Ford Barrett, Assistant Chief Counsel. Telephone (202) 447-1896.

Directors' qualifying shares (7.4210). On July 24, 1980, an amendment to this ruling was published to accommodate certain statutory changes effected by the Depository Institutions Deregulation and Monetary Control Act of 1980 (Pub. L. 96-221). Section 710 of that act authorizes the Office to determine that an equivalent ownership interest in a company controlling a national bank may satisfy the traditional requirement for directors' qualifying shares in the bank. Under the amendment, if any of the par, book, or market value of holding company stock, as of the date it was acquired or the date the person becomes a director. equals or exceeds $1,000, the person meets the stock ownership requirement for all subsidiary national banks (45 FR 49239, Docket No. 80-5).

For further information, contact James V. Elliott, Director, Bank Organization and Structure Division. Telephone (202) 447-1184.

Pension plans (7.5010). This ruling covers the authority of national banks to offer pension plans to their employees. As indicated in the last semiannual agenda, it was reviewed in light of legal changes which have occurred over the last several years, with a view to possible modification. The Office has concluded that changes are not necessary. Adding information to the ruling would only repeat legal and regulatory requirements already covered by other agencies and departments.

For further information, contact Laura McAuliffe, Executive Assistant to the Senior Advisor. Telephone (202) 447-1175.

National bank as guarantor or surety on indemnity bond (7.7010). The Office has reviewed the need for a formal amendment to clarify the role which marketable securities may have as collateral in guarantees and indemnity bonds. In the past, the Office has advised individual national bank inquirors that a national bank may become a guarantor by setting aside either cash or marketable securities to cover the total potential liability. The last semiannual agenda indicated that the ruling would be reviewed.

After review and analysis, the Office has determined that no change is warranted in the ruling at this time. Moreover, the Office has withdrawn previous interpretations allowing marketable securities to serve as collateral for guarantees and indemnity bonds.

For further information, contact Ford Barrett, Assistant Chief Counsel. Telephone (202) 447-1896.

12 CFR Part 16—Secruities Offering Disclosure Circulars

The Office adopted amendments to the securities offering disclosure rules, effective March 21, 1980. Subject to certain exemptions, the disclosure rules generally require a national bank to provide an offering document to offerees when it offers or sells its equity or debt securities. The March amendments are intended to simplify and expedited the process through which national banks offer their securities to the public, while providing the information needed by investors.

The principal amendments to Part 16 concern: (a) A qualified exemption from offering circular requirements where the amount offered exceeds $500,000 in a twelve-month period (The regulation previously provided for an exemption at the $300,000 level.); (b) a requirement permitting use of an abbreviated offering circular where the amount offered does not exceed $2,000,000 in a twelve-month period; and (c) certain technical amendments to the offering circular format (45 FR 11115).

For further information, contact Michael Herrick, Attorney, Securities Disclosure Division. Telephone (202) 447-1954.

12 CFR Part 26—Management Interlocks

On April 9, 1980, the Office published final amendments to its regulation implementing the Depository Institution Management Interlocks Act (Title II of the Financial Institutions Regulatory and Interest Rate Control Act of 1978 (Pub. L. 95-630)) in joint action with the Federal Reserve System, Federal Deposit Insurance Corporation, Federal Home Loan Bank Board, and National Credit Union Administration.

The April amendments contain clarifying and technical changes to the regulation published in July 1979, and add a definition of the term "representative or nominee", as well as new provisions concerning "grandfather rights" and "changes in circumstances" (45 FR 24384).

For further information, contact Howard Finkelstein, Attorney, Legal Advisory Services Division. Telephone (202) 447-1880.

Section III: Banking Bulletins and Banking Circulars

The Office's formal regulations (those actions adopted into the Code of Federal Regulations as "regulations") do not

cover all regulatory issues meriting public attention. Often, there are special matters of supervisory concern and new or revised supervisory procedures that are not appropriate candidates for formal regulation. However, they must be communicated to the industry and other members of the public expeditiously. Such communication usually is accomplished by the Office system of banking bulletins and banking circulars. Both were initiated in 1968. Bulletins are numbered consecutively during the year issued and ordinarily remain in effect for one year or less. They are frequently used as cover memoranda to forward copies of proposed and final regulations to banks and other interested members of the public. Circulars are more permanent and are numbered consecutively. Since 1968, 144 have been issued, of which 64 were withdrawn, leaving 80 still in effect.

Review Project

The Office is presently reviewing all effective circulars to eliminate any inconsistencies between circulars and other authoritative documents, to update as needed and to review any requirements imposed on banks. A number of circulars are likely to be revised or rescinded. The project is scheduled for completion within six months. The public is invited to submit suggestions concerning any circular currently in effect. Comments should be sent to, and further information obtained from, Frank Carbone, Director, Commercial Examinations Division. Telephone (202) 447-1164.

Listing of Bulletins and Circulars

In the past, the Office has not disseminated periodic summary listings of recently issued bulletins and circulars. It appears that such a listing may be useful to national banks and other members of the public. Accordingly, this and other semiannual agenda will contain such listings.

Following, is a list of bulletins and circulars published since the last semiannual agenda together with a brief description of their contents.

For further information, contact Tibby Ford, Communications Division. Telephone (202) 447-1800.

Banking Bulletins

Number	Date	Subject	Contents
BB-80-3	February 15, 1980	Semiannual Agenda	Memorandum to presidents of all national banks conveying a copy of the Semiannual Agenda, as published in the **Federal Register** February 13, 1980 (45 FR 9743).
BB-80-4	February 27, 1980	12 CFR Part 12 (Disposition of Credit Life Insurance Income).	Memorandum to chief executive officers of all national banks, regional administrators and examiners, citing judicial support for Office directives requesting certain national banks to cease paying credit life insurance commissions to bank insiders.
BB-80-5	February 25, 1980	12 CFR Part 16 (Securities Offering Disclosure Rules).	Memorandum to chief executive officers of all national banks, regional administrators and examiners, conveying a copy of 12 CFR Part 16 as published in the **Federal Register** February 20, 1980 (45 FR 11115).
BB-80-6	March 6, 1980	Investment Securities Eligibility Rulings.	Memorandum to chief executive officers of all national banks, regional administrators and examiners conveying a copy of 12 CFR Part 1 (Investment Securities), as published in the **Federal Register** February 11, 1980 (45 FR 6407).
BB-80-7	March 28, 1980	12 CFR Part 103 (Financial Recordkeeping and Reporting of Currency and Foreign Transactions).	Memorandum to chief executive officers of national banks noting Office concern with Treasury reports of large cash flows through some banks and drawing attention to: (1) need for internal procedures that will permit full compliance with 12 CFR 103; and (2) Treasury intent to amend 12 CFR 103, as published in the **Federal Register** September 7, 1979 (44 FR 52258).
BB-80-8	Undated	Management Official Interlocks	Memorandum to chief executive officers of all national banks, regional administrators and examiners conveying a copy of 12 CFR Part 26 (Management Official Interlocks) as published in the **Federal Register** April 9, 1980 (45 FR 24384).
BB-80-9	April 17, 1980	12 CFR Part 17 (Required Notification to Nominate Bank Directors).	Memorandum to chief executive officers of all national banks, regional administrators, and examiners conveying a copy of a proposal to rescind 12 CFR Part 17 as published in the **Federal Register** April 14, 1980 (45 FR 2578).
BB-80-10	April 21, 1980	12 CFR Part 7 (Loans Secured by Real Estate).	Memorandum to chief executive officers of all national banks, regional administrators and examiners conveying a copy of 12 CFR Part 7, Subpart B as published in the **Federal Register** September 5, 1979 (45 FR 51795).
BB-80-11	April 23, 1980	Regulation E	Memorandum to chief executive officers of all national banks discussing the applicability and requirements of Federal Reserve Regulation E with special emphasis on those amendments which became effective May 10, 1980.
BB-80-12	Undated	Draft Consumer Program	Memorandum to chief executive officers of all national banks, regional administrators and examiners conveying a copy of the proposed Consumer Program, (required by Executive Order 12160), as published in the **Federal Register** April 24, 1980 (45 FR 27898).
BB-80-13	May 12, 1980	Community Development Division Brochure.	Memorandum to chief executive officers of all national banks, regional administrators and examiners conveying a copy of a brochure describing the purpose and organization of the Comptroller's Community Development Division.
BB-80-14	June 13, 1980	Revised Regulation Z	Memorandum to chief executive officers of all national banks, regional administrators and examiners conveying a copy of the Federal Reserve's revised Regulation Z, as released by the Federal Reserve Board April 28, 1980 and as published in the **Federal Register** May 5, 1980 (45 FR 29702).
BB-80-15	June 11, 1980	OCC adoption of FFIEC's Uniform Guideline on Internal Control for Foreign Exchange in Commercial Banks.	Memorandum to chief executive officers of all national banks, regional administrators and examiners conveying a copy of the subject Guideline, as released by the FFIEC May 22, 1980.
BB-80-16	June 27, 1980	Proposed Regulation D	Memorandum to chief executive officers of all national banks, regional administrators and examiners conveying a copy of the Federal Reserve's proposed Regulation D, published June 9, 1980 (45 FR 38388).
BB-80-17	June 30, 1980	Proposed Rulemaking—Data Processing Services.	Memorandum to chief executive officers of all national banks, regional administrators and examiners conveying a copy of an advance notice of proposed rulemaking for Interpretive Ruling 7.3500 (12 CFR 7.3500-Data Processing Services), as published in the **Federal Register** June 16, 1980 (45 FR 40613).
BB-80-18	July 1, 1980	Amendments to 31 CFR 103	Memorandum to chief executive officers of a national bank, regional administrators and examiners conveying a copy of Treasury Department Regulation 12 CFR 103 (Financial Recordkeeping and Reporting of Currency and Foreign Transactions), as published in the **Federal Register** June 5, 1980 (45 FR 37818).

Banking Circulars

Number	Date	Subject	Contents
BC-135	February 8, 1980	Fraudulent use of Documents Purporting to be "ICC notes".	Memorandum to chief executive officers of all national banks; all State Banking Authorities; Chairman, Board of Governors of the Federal Reserve System; Chairman, Federal Deposit Insurance Corporation; Conference of State Bank Supervisors; Regional administrators; and examiners conveying a notice from the United States Council of the International Chamber of Commerce, Inc., that documents purporting to be ICC notes are not obligations of the Council.
BC-136	February 8, 1980	European Credit Bank Corporation, Ratho Mill, Saint Vincent, West Indies.	Memorandum to chief executive officers of all national banks; all State Banking Authorities; Chairman, Board of Governors of the Federal Reserve System; Chairman, Federal Deposit Insurance Corporation; Conference of State Bank Supervisors; regional administrators; and examiners informing them that subject bank is not licensed to do business and has not honored checks drawn on it.
BC-137	February 19, 1980	Prohibition on Political Contributions by National Banks.	Memorandum to chief executive officers of national banks, regional administrators and examiners advising of the rescission of BC-82 and outlining, after consultation with the Federal Election Commission, prohibitions imposed on national banks by 2 U.S.C. 441(b) (Federal Election Campaign Act of 1971).
BC-138	February 29, 1980	Gold; 30 ingots Paid as Ransom	Memorandum to chief executive officers of national banks; all State Banking Authorities; Chairman, Board of Governors of the Federal Reserve System; Chairman, Federal Deposit Insurance Corporation; Conferences of State Bank Supervisors; regional administrators; and examiners indentifying gold ingots used to pay ransom and asking for information about them.
BC-139	March 14, 1980	Monetary and Credit Actions to Help Curb Inflation.	Memorandum to chief executive officers of all national banks describing the President's program to curb inflation and conveying copies of news releases and final regulations promulgated by the Federal Reserve that constituted a part of that program.
BC-79 (201) revision	March 19, 1980	National Bank Participation in the Financial Futures and Forward Placement Markets.	Memorandum to the chief executive officers of all national banks and to regional administrators describing Office policy on national banks entering into contracts calling for the future delivery of selected financial instruments.
BC-180 Supplement 2	March 24, 1980	12 CFR Part 27 (Fair Housing Home Loan Data System).	Memorandum to chief executive officers of national banks, regional administrators and examiners briefly describing the regulation and conveying a special questionnaire on past and expected home loan applications.
BC-140	May 2, 1980	Uniform Policy for Classification of Consumer Installment Loans Based on Delinquency Status.	Memorandum to presidents of all national banks, regional administrators and examiners describing the subject policy as recommended by the Federal Financial Institutions Examination Council and adopted by the Comptroller's Office.
BC-141	May 2, 1980	Brokered funds	Memorandum to chief executive officers of national banks; all State Banking Authorities; Chairman, Board of Governors of the Federal Reserve System; Chairman, Federal Deposit Insurance Corporation; Conference of State Bank Supervisors; regional administrators; and examiners warning of growing incidence of suspect offers of brokered deposits and asking that observed questionable offers be reported to the Office.
BC-142	May 23, 1980	Arab International Bank	Memorandum to chief executive officers of national banks; all State Banking Authorities; Chairman, Board of Governors of the Federal Reserve System; Chairman, Federal Deposit Insurance Corporation; Conference of State Bank Supervisors; regional administrators; and examiners advising that documents having the words ARAB INTERNATIONAL BANK are not those of the Arab International Bank, Cairo, Egypt.
BC-143	May 23, 1980	Status of Entities Licensed by Saint Vincent Trust Authority Ltd., Saint Vincent, West Indies.	Memorandum to chief executive officers of national banks; all State Banking Authorities; Chairman, Board of Governors of the Federal Reserve System; Chairman, Federal Deposit Insurance Corporation; Conference of State Bank Supervisors; regional administrators; and examiners advising extreme caution in dealing with four listed business entities.
BC-144	June 30, 1980	Status of Offshore Shell Bank Licenses issued by Saint Vincent Trust Authority, Ltd., West Indies.	Memorandum to chief executive officers of national banks; all State Banking Authorities; Chairman, Board of Governors of the Federal Reserve System; Chairman, Federal Deposit Insurance Corporation; Conference of State Bank Supervisors; regional administrators; and examiners advising extreme caution in dealing with four listed business entities.

SECTION IV: INFORMATION COLLECTION BUDGET

On December 4, 1979, the President issued Executive Order 12174 on Paperwork, calling for the establishment of "procedures that eliminate all paperwork burdens on the public above the minimum necessary to determine and implement public policy and ensure compliance with Federal laws". In response to a directive from the Office of Management and Budget (OMB) under that Executive Order, the Office has prepared an "Information Collection Budget" for fiscal year 1981. That document contains estimates of the time incurred by the public (including national banks) preparing information required by the Office in order to perform its supervisory responsibilities. The purpose of this Information Collection Budget, together with those of other Executive Branch agencies, is to establish a firm yet reasonable limit on the flow of paper between the Federal Government and the public. The Office has taken seriously its responsibility to lessen paperwork and regulatory burdens placed on national banks, as this and prior semiannual agenda demonstrate.

To prepare the Information Collection budget, the Office estimated the amount of time required to respond to each information request it expects to make.

The Office's Information Collection Budget estimates a total public cost of approximately 727,500 hours. That figure represents information collections ranging from activities requiring only 15 minutes to some requiring an average of 100 hours of a respondent's time. Most activities affect far fewer than the total number of national banks.

Information required in the examination process has been expressly excluded from the Information Collection Budget because of the unique aspects of the examination. The Office's estimate of the amount of time spent by a bank on all aspects of a commercial examination is 322 hours, with 107 hours devoted to paperwork. The Office recognizes there is wide variation in this figure resulting from variations in the size of institutions and the nature of the examination. The total amount of time spent on examination paperwork, including specialized examinations by banks, is an estimated 558,225 hours. This figure approximates only one-third of the time the Office estimates will be spent on paperwork by bank examiners.

In addition, the Office recognizes that during an economic down-turn, reporting and surveillance are likely to be increased. For this reason a contingency allowance of at least 500,000 hours has been proposed beyond the total cost estimated.

For further information, contact Susan Wagner, Special Assistant to the Comptroller. Telephone (202) 447-1766.

SECTION V: IMPACT OF SELECTED REGULATORY CHANGES

As occasions warrant, the Office seeks to measure the impact on the banking industry of new or revised regulations. Two such analyses were undertaken since publication of the last semiannual agenda. One examined selected effects of the new 12 CFR Part 12 (Recordkeeping and confirmation requirements for certain transactions effected by national banks) an the other examined the effects of revisions to 12 CFR Part 18 (Annual financial disclosure to shareholders). Both regulatory developments became effective January 1, 1980.

Each analysis was based on voluntary returns of special questionnaires sent to a number of national banks. No bank received both questionnaires.

For further information, contact David G. Hayes, Senior Economic Advisor, Regulations Analysis Division. Telephone (202) 447-1177.

Part 12

The analysis of a survey on this new regulation has not been completed at this time. Preliminary indications are discussed below, and a further analysis should be reported in the next semiannual agenda. The requirements of the New Part 12, in summary form, are:

1. A chronological record of all securities transactions effected for customers must be kept. Banks effecting more than 200 securities transactions per year for customers, not counting transactions in government securities, must also keep account records, a memorandum of each order, and a record of broker/dealers used and commissions paid to each;

2. Each bank must provide each customer with a prompt confirmation of each transaction, unless the bank and customer agree to other confirmation procedures; and

3. Each bank must require its trading personnel to report to the bank any large transactions of their own, other than transactions in government securities.

A survey was sent to 273 national banks of various sizes, to develop information on bank practices prior to and after the effective date of the regulation, and related information. Responses were received from 75 percent of the banks.

A preliminary review of the data indicates the following matters of interest:

1. Prior to the regulation, only 25 percent of the responding banks required their trading personnel to report their own large transactions;

2. Most banks effecting large numbers of transactions were generally in compliance with all other requirements of the new regulation prior to its adoption;

3. Many banks effecting small numbers of transactions maintained one or more of the four records systems. However, the record(s) maintained were not usually the specific chronological record now required.

Further analysis is expected to cover such matters as:

1. The number and size of banks which would be affected if the regulation were changed by increasing the number of exempt transactions or by exempting banks of a certain size;

2. The changes in bank practices resulting from the prompt confirmation requirement and the flexibility providing for other confirmation arrangements; and

3. The impact of the regulation on small banks with a limited number of transactions.

Part 18

Analysis of revisions to Part 18 is complete. Revisions to Part 18 granted approximately 56 percent of all national banks flexibility in meeting their responsibility to keep their shareholders informed about the bank's financial condition. Previously, national banks that were neither wholly-owned subsidiaries of a bank holding company, nor subject to 12 CFR Part 11 (Securities Exchange Act disclosure rules) were obliged to send an annual financial report to each shareholder. Under the revised Part 18, those 2,485 national banks have the option of providing annual financial information in a more flexible format to each shareholder, or notifying each shareholder that such information is available and will be forwarded upon request without charge. The Office sought to estimate national bank use of the option and related cost savings. To accomplish that objective, a seven part questionnaire was mailed to a sample of 119 national banks. The sample was drawn from all national banks subject to Part 18 which were not to receive the Part 12 survey form. Banks were divided into three asset size classes: under $25 million, $25 million—$100 million; and $100 million and over. Potential respondents wer drawn at random from each size class. There was a 92 percent response rate. Banks were asked to state:

1. Number of shareholders;

2. Whether a notice or an annual report was sent in 1980;

3. If notice was sent, how many shareholders requested an annual report;

4. If notice will be sent in 1981;

5. Cost of sending an annual report to all shareholders;

6. Cost of sending a notice to all shareholders and a report to those who might request it; and

7. Time spent responding to survey.

Results, other than those concerning costs may be summarized as follows:

1. 7 percent of all respondents sent notices in 1980 and they found that only 4 percent of their shareholders wanted annual reports; and

2. 18 percent of all respondents plan to send notices in 1981.

Results of the cost questions are reflected in the following table.

Bank size (assets)	Cost of annual report		Cost of notice	
	Per bank	Per shareholder	Per bank	Per shareholder
Greater than $100 million:				
Average	$2,757	$9.01	$762	$2.46
Median	2,030	5.73	500	1.13
$25 million to $100 million:				
Average	837	7.39	406	4.02
Median	457	1.79	85	.47
Less than $25 million:				
Average	227	2.53	60	.68
Median	114	1.44	25	.65

If the survey results are extrapolated to all affected banks, the aggregate cost of providing an annual report to all shareholders, as was previously required, would have been approximately $1.5 million. The aggregate cost of sending a notice and furnishing the informatin upon request is approximately $600,000. Thus, the change in the regulation could reduce

cost by $900,000, a 60% reduction, without significantly reducing the benefits of the regulation, i.e. providing shareholders easy access to financial information concerning the bank in which they own an interest.

Section VI: Mailing Schedules for Office Issuances

Many bankers have complained about the amount of paper received from the Office. The suggestion has been offered that the Office accumulate various issuances, including proposed and final regulations, and send them to banks on a monthly or quarterly schedule. Items whose timeliness is critical, such as requirements with which banks must comply by an early date, would be exempted from such a program.

While a periodic mailing of issuances would not necessarily reduce the imcoming volume of paper to a bank, it could have several advantages:

1. A predictable time for bank staff to devote to incoming OCC issuances;

2. Possible improvements in the distribution of issuances and where appropriate, the updating of manuals and other reference materials as well as in the preparation and submission of comments solicited by the Office; and

3. Potential savings in Office mailing costs.

The Office solicits comments on the desirability of a periodic mailing schedule and also requests comment on:

1. Preferred schedules and the reason for stated preferences;

2. Any suggestions for improvements in the format of OCC issuances; and

3. Methods other than monthly or quarterly mailings which might assist banks in dealing with regulatory issuances, such as publication in the weekly bulletins of each regional office a simple notice, including a short summary and such information as docket number, Federal Register citation, comment period and a knowledgeable Official who may be contacted for additional information.

For further information, contact Shela Turpin, Bank Analyst, Regulations Analysis Division. Telephone (202) 447-1177.

Dated: July 31, 1980.

Lewis G. Odom, Jr.,

Acting Comptroller of the Currency, Department of the Treasury.

[FR Doc. 80-23733 File 8-5-80; 8:45 am]

BILLING CODE 4810-33-M

FEDERAL HOME LOAN BANK BOARD

12 CFR Parts 525, 541, 545, and 563

[No. 80-469]

Federal Savings and Loan Associations; Revision of Real Estate Lending Regulations

Dated: July 31, 1980.

AGENCY: Federal Home Loan Bank Board.

ACTION: Proposed regulations.

SUMMARY: These proposed regulations implement in part Title IV of the Depository Institutions Deregulation and Monetary Control Act of 1980, which comprehensively revised and expanded the investment authority of Federal savings and loan associations in the area of real-estate-related loans. Major changes include the lifting of restrictions on location of security property, lien priority and dollar amount of loans.

DATE: Comments must be received by: October 6, 1980.

ADDRESS: Send comments to the Office of the Secretary, Federal Home Loan Bank Board, 1700 G Street, N.W., Washington, D.C. 20552.

FOR FURTHER INFORMATION CONTACT: Nancy L. Feldman, Associate General Counsel, (202) 377-6440, Federal Home Loan Bank Board, 1700 G Street, N.W., Washington, D.C. 20552.

SUPPLEMENTARY INFORMATION: The Depository Institutions Deregulation and Monetary Control Act of 1980 ("Act"), Pub. L. 96-221, 94 Stat. 132, greatly expanded the investment powers of Federal savings and loan associations; and important part of this expansion is set forth in section 401 of Title IV of the Act, which revised section 5(c) of the Home Owners Loan Act of 1933 (12 U.S.C. § 1464(c)) with regard to real-estate-related lending authority of Federals.

Since a major purpose of expanding Federals' lending authority was to make them more competitive with other financial institutions, the Board proposes to implement the new statutory authority not only by removing restrictions no longer mandated by statute, but also by rescinding some of its current rules which set forth detailed lending procedures the Board believes should more properly be determined by an association's management. The Board is also taking this opportunity to regroup its lending regulations to better reflect the proposed changes, and to delete provisions in other parts of its regulations which would be inconsistent with such changes. Major proposed changes are described below.

Dollar Limits on Loan

The Act eliminated the previous statutory restrictions on home loans of $75,000 ($112,500 for loans secured by real estate in Alaska, Guam, and Hawaii) and dollar limitations referenced to section 207(c)(3) of the National Housing Act of 1934, as amended, for apartment loans; it also eliminated the 20-percent-of-assets exception for the portion of loans in excess of these amounts. The Board therefore proposes to lift all of its dollar restrictions on loans, except with respect to its loans-to-one-borrower limitation and affiliated-person loan limitations, found in Part 563 of the Regulations for Insurance of Accounts of (12 CFR 563). The proposed removal of dollar limits extends to current regulatory limits on low-downpayment loans currently found in 12 CFR 545.6-2 (a)(2) and (3), and current limits on home improvement and equipping loans.

As a related matter, the Board also proposes to rescind 12 CFR 525.13 of the Regulations of the Federal Home Loan Bank System, which limits the dollar amount of home mortgages eligible as collateral for Bank advances. That provision implemented section 10(b)(2) of the Federal Home Loan Bank Act of 1932, which refers to the now-rescinded dollar limitations on home loan amounts in section 5(c) of the Home Owner's Loan Act.

Lien Priority

The Act eliminated the first-lien security requirement previously applied to Federals' basic residential lending authority. the Board therefore proposes to delete such limitation from its regulations, but to require that associations making loans on the security of junior liens prepare and maintain documentation sufficient to indicate that the total liens on such property do not exceed applicable loan-to-value ratios. Estimations of such ratios would reflect a current appraisal of the property at the time the association's loan is to be made and, if such loan is for improvement of the property, may include an estimate of the expected value of the property after completion of such improvements.

Location of Security Property

Revised section 5(c) does not restrict associations in their ability to invest in loans outside their local areas; the Board is therefore proposing to lift all geographic limitations on real estate loans, including loans made for property improvement and loans made on the security of mobile homes. Currently, Federal associations are limited to

investment in loans made in an area generally comprising their home states and a territory 100 miles around their home offices, with use of a 20 percent-of-assets "leeway" basket and a 20 percent-of-assets loan participation basket. Institutions whose accounts are insured by the Federal Savings and Loan Insurance Corporation are permitted by the Board, under the authority of section 403(b) of the National Housing Act, as amended (12 U.S.C. § 1726), to invest 40 percent of assets in loan participations secured by non-local property, and 15 percent of assets in non-local whole loans. In order to give parity to insured institutions in relation to the new proposed rules for Federals, the Board additionally is proposing to lift these current geographic limitations. Notwithstanding these changes, the Board will continue to evaluate an association's efforts to meet its responsibilities under CRA in satisfying its continuing and affirmative obligations to help meet the credit needs of their local communities, including low- and moderate-income neighborhoods.

Downpayments, Term of Years

The previous section 5(c) did not contain statutory references to loan-to-value ratios for real estate loans; the statute as revised uses 90 percent of value as a reference point for residential real-estate loans that will not require the extra security of mortgage insurance. The Board therefore proposes to liberalize its residential lending regulations to recognize 90 percent loans rather than 80 percent loans as the basic home finance benchmark, and to limit regulatory restrictions currently applied to home loans between 80 and 90 percent to those in excess of 90 percent. However, the 80 percent limit would continue to apply to short-term loans made to facilitate the trade-in or exchange of property because these are nonamortized loans, but this provision would be liberalized to authorize the making of such loans to realtors.

In addition, in order to provide associations with real estate loan authority comparable to that of national banks, the Board proposes to raise its multi-family loan limit from 80 to 90 percent of value, and its commercial real estate lending authority from 75 percent of value and 25 year terms to 90 percent of value and 30 year terms.

In recognition of recent rapid increases in housing costs, and as an expression of its desire to assist potential borrowers in meeting associations' eligibility requirements regarding loan repayments, the Board is also proposing to allow associations to make home loans with maximum terms of 40 years. Additionally, nonamortized residential loans would be permitted a maximum term of five years, rather than the current three year maximum.

Leeway Authority

The Board proposes to liberalize its current regulations pertaining to construction loans and nonconforming secured loans on residential real property which do not meet its regular lending requirements. Section 5(c) authorizes associations to invest up to five percent of assets in each of these categories; at present, however, the Board's regulations limit such investment to two percent of assets in each category unless an association has net worth in excess of regulatory requirements and meets certain eligibility criteria. The Board therefore proposes to permit investment up to the full statutory allowance, and notes that this would permit associations to invest in loans made by state-chartered associations which fall into either of the two categories, including adjustable-type mortgages.

Other Proposed Changes

Various regulatory definitions would be amended to reflect the new statutory language. Loans on building lots would no longer be restricted to builders. Certain percentage-of-assets limits which are regulatory rather than statutory, such as those pertaining to flexible payment mortgages and development loans, would be deleted. A new section providing for loans on unimproved real estate would be added to implement this new statutory authority. Loans of up to 15 years would be authorized on the security of building lots to be used for borrowers' personal residential use. the coverage of private mortgage insurance on loans in excess of 90 percent of value would be reduced to the amount of the loan exceeding 90 percent. The minimum loans-to-one-borrower authority for new associations would be increased.

Accordingly, the Federal Home Loan Bank Board hereby proposes to amend 12 CFR Parts 525, 541, 545, and 563, as set forth below.

Federal Home Loan Bank System

PART 525—ADVANCES

§ 523.13 [Deleted]

1. Delete § 525.13 Home Mortgages exceeding $60,000.

Federal Savings and Loan System

PART 541—DEFINITIONS

2. Amend Part 541 by revising §§ 541.12, 541.14, and 541.17 (a) and (b), and adding new §§ 541.18-1 and 541.21, to read as follows:

§ 541.12 Improved real estate.

Any of the real estate defined in §§ 541.3, 541.4, 541.11, 541.16, 541.17, or 541.23.

§ 541.14 Loans secured by liens on real estate.

(a) Loans secured by an interest in real estate in fee or in a leasehold or subleasehold extending or renewable automatically at the option of the holder or the Federal association for 5 years after maturity of the loan, if, in the event of default, the real estate interest could be used to satisfy the obligation with the same priority as a mortgage or a deed of trust in the jurisdiction where the real estate is located; and

(b) Loans secured by assignment of such loans.

§ 541.17 Other improved real estate.

(a) Commercial real estate containing (1) a permanent structure(s) constituting at least 25 percent of its value, or (2) improvements which make it usable by a business or industrial enterprise.

(b) Real estate containing offsite improvements, completed according to governmental requirements and general practice in the community, sufficient to make the property ready for primarily residential construction, and real estate in the process of being improved by a building or buildings to be constructed or in the process of being constructed for primarily residential use.

* * * * *

§ 541.18-1 Residential real property.

Real estate improved or to be improved by a structure(s) designed primarily for residential use, and deriving at least 80 percent of its value from the land and improvements attributable to such use.

§ 541.21 Unimproved real estate.

Any real estate which will become (a) improved real estate as defined in § 541.12, or (b) other improved real estate as defined in § 541.17(b) of this Part.

PART 545—OPERATIONS

3. Revise §§ 545.6, 545.6-1, and 545.6-2, by substituting new texts to read as follows:

§ 545.6 Real estate loans.

(a) *General.* A Federal association may invest in, sell, purchase, or otherwise deal with loans or interests in loans secured by liens on real estate, only as provided in this Part and subject to the limitations in § 563.9 of this chapter.

(b) *Determination of loan-to-value ratios.* (1) In determining compliance with maximum loan-to-value limitations in this Part, at the time of making a loan an association shall add together the amount of all real estate loans on the security property, and shall not make such a loan unless the total amount of such mortgages (including the one to be made) does not exceed applicable maximum loan-to-value limitations prescribed in this Part, as indicated by documentation retained in the loan file.

(2) In valuing the real estate security, an association shall use the current appraised value of the security property, and may include any expected value of improvements to be financed.

(c) *Purchase of loans from the Federal Savings and Loan Insurance Corporation.* An association may purchase from the Federal Savings and Loan Insurance Corporation any real-estate-related loan guaranteed by the Corporation under a guaranty contract made by the Corporation with the purchasing association.

§ 545.6-1 Insured and guaranteed real estate loans.

(a) Loans that are insured or guaranteed by a public mortgage insurer may be made in amounts and with terms and conditions of repayment acceptable to the insurer, provided the loan is at least 10 percent insured or 20 percent guaranteed.

(b) A loan is insured or guaranteed by a public mortgage insurer if:

(1) The loan is guaranteed, or a commitment to guarantee the loan has been made, under the Servicemen's Readjustment Act of 1944 or chapter 37 of title 38, United States Code;

(2) The mortgagee is insured, or a commitment for insurance has been made, under the National Housing Act or the Servicemen's Readjustment Act of 1944, or chapter 37 of title 38, United States Code; or

(3) The loan is insured or guaranteed by an agency or instrumentality of a state (i) whose full faith and credit is pledged to support the insurance or guarantee, or (ii) whose insurance or guarantee program is approved by the Federal Home Loan Mortgage Corporation.

§ 545.6-2 Residential real estate loans.

(a) *Home loans.* (1) *General requirements.* Loans on the security of homes or combinations of homes and business property, repayable in regular monthly payments sufficient to liquidate the debt, principal and interest, within the loan term, shall not exceed 90 percent of the value of the security property and shall be repayable within 40 years. Except as otherwise specifically authorized in this Part, after the first payment on a loan described under this paragraph (a) which is secured by property occupied or to be occupied by the borrower, no subsequent payment shall be more than any preceding payment.

(2) *Ninety-five percent loan-to-value authorization.* The loan-to-value limitation in paragraph (a)(1) of this section shall be 95 percent, if:

(i) The loan contract requires that, in addition to principal and interest payments on the loan, one-twelfth of estimated annual taxes and assessments on the security property by paid monthly in advance to the association;

(ii) The borrower, including a purchaser who assumes the loan, has executed a certificate stating that the borrower occupies, or in good faith intends to occupy, the property (or one dwelling on the property) as the borrower's principal dwelling; and

(iii) As long as the unpaid balance of the loan exceeds 90 percent of the value or purchase price of the security property, determined at the time the loan was made, such excess is guaranteed or insured by a mortgage insurance company which the Federal Home Loan Mortgage Corporation has determined to be a "qualified private insurer."

(3) *Non-monthly installment loans.* The term-of-years limitation shall be 15 years on loans made with interest payable less frequently than monthly but at least semi-annually and principal payable less frequently than monthly but at least annually in installments sufficient to retire the debt, both interest and principal, within the term, and 40 years on loans made on farm residences or combinations of farm residences and commercial farming enterprises with principal and interest payable less frequently than monthly but at least annually in installments sufficient to retire the debt, both interest and principal, within the loan term.

(4) *Loans to facilitate trade-in or exchange.* Loans made to facilitate the trade-in or exchange of security property described in this section, including bridge loans to individuals and realtors, shall not exceed 80 percent of value and shall be repayable within 18 months, with interest payable at least semi-annually: *provided,* that the aggregate amount of such loans may not exceed 5 percent of an association's assets.

(5) *Nonamortized loans.* Nonamortized loans (loans on which no principal payments are made until the end of the term) shall not exceed 60 percent of value and shall be repayable within 5 years, with interest payable at least semi-annually.

(6) *Loans made on the combined security of real estate and savings accounts.* Loans may be made under paragraph (a)(2) in excess of the maximum loan-to-value ration therein permitted, with such excess secured by savings accounts, subject to the following restrictions:

(i) The loan shall not exceed the appraised value of the real estate;

(ii) The savings account shall consist only of funds belonging to the borrower, members of his family, or his employer;

(iii) The association shall fully disclose to the prospective borrower the difference (including interest, private-mortgage-insurance costs, and equity interest) between a loan secured by real estate and savings and a loan secured by real estate alone; and

(iv) The loan shall comply with § 545.6-4(b)(2).

(7) *Flexible payment loans.* Loans authorized under this paragraph (a) which are secured by a single-family dwelling which the borrower has certified is or will be the borrower's principal dwelling, may be repayable in monthly installments, as follows:

(i) During an initial period not exceeding five years, installments shall equal at least one-twelfth the annual interest rate times the unpaid balance of the loan which rate may be increased only by subsequent agreement;

(ii) The amount of the first payment after such period shall be fixed at the beginning of the loan term and subsequent required payments may be less but not more;

(iii) Required payments shall be sufficient to liquidate the debt, principal and interest, within the loan term; and

(iv) The loan agreement shall describe the payment schedule.

(8) *Loans on cooperatives.* Loans may be made under paragraphs (a) (1) or (2) as follows:

(i) *Loans on the security of cooperative housing developments.* The association shall require that the cooperative housing development maintain reserves at least equal to those required for comparable developments insured by the Federal Housing Administration.

(ii) *Loans on individual cooperative units.* Such loans may be made on the security of (A) a security interest in stock or a membership certificate issued to a tenant stockholder or resident member by a non-profit cooperative housing organization, and (B) an assignment of the borrower's interest in the proprietary lease or occupancy agreement issued by such organization.

(9) See §§ 545.6–4 and 545.6–4a of this Part for other mortgage plans which may be used for loans authorized under this paragraph.

(b) *Multifamily dwelling loans.* Loans on the security of other dwelling units, combinations of dwelling units, including homes, and business property involving only minor or incidental business use, shall not exceed 90 percent of the value of the security property and shall be repayable within 30 years: provided, that nonamortized loans shall not exceed 60 percent of value and shall be repayable within 5 years, with at least semi-annual interest payments.

(c) *Loans on unimproved real estate.* Loans to finance acquisition of land to be eventually developed for primarily residential usage shall not exceed 66⅔ percent of the value of the security property, and shall be repayable in 3 years with interest payable at least semi-annually.

(d) *Development loans.* (1) Loans to finance development of land for primarily residential usage shall not exceed 75 percent of the value of the security property and shall be repayable within 5 years, with interest payable at least semi-annually. An association shall not make such a loan unless it appears that the purpose of the loan is to enable the borrower to undertake residential development of the land to be acquired, as evidenced by a preliminary development plan that is satisfactory to the association.

(2) Upon release of any portion of the security property from the lien securing the loan, the principal balance of the loan shall be reduced by an amount at least equal to that portion of the outstanding loan balance attributable to the value of the property to be released. "Value" for the purposes of the preceding sentence is the value fixed at the time the loan was made.

(3) An association may extend the time for payment for an additional period not over 3 years, but no such extension may be made unless (A) interest on the loan is current, (B) the association's board has before it a current independent appraisal of the security property, and (C) the outstanding principal balance of the loan is or has been reduced to an amount not over 75 percent of the value of the security property.

(4) The aggregate amount of loans outstanding to any one borrower (including loans to any business entity with which such borrower is associated) or on any one project shall not exceed an amount equal to two percent of the association's assets.

(e) *Loans on building lots and sites.* Loans on the security of building lots and sites ("other improved real estates" as defined in § 541.17(b) of this Part) shall comply with the following requirements:

(1) Loans for a borrower's principal dwelling (as evidenced by a borrower's certification of intention, at the time the loan is made, that the property will be so used) shall not exceed 75 percent of the value of the security property and shall be repayable within 15 years. The loan contract shall provide for monthly payments of principal and interest sufficient to amortize at least 40 percent of the original principal amount before the end of the loan term.

(2) Loans other than for a borrower's principal dwelling shall not exceed 75 percent of the value of the security property and shall be repayable within 3 years, with semi-annual interest payments beginning not more than 1 year after the first disbursement.

(3) The provisions of paragraphs (d)(2), (3), and (4) of this section shall apply to this paragraph (e).

(f) *Construction loans.* (1) Construction loans shall not exceed 75 percent of the value of the security property and shall be repayable in 3 years, except that for construction of single family dwellings, construction of individual structures shall be completed within 18 months of disbursement of applicable loan funds.

(2) Associations shall reserve the right to impose limits on the number of structures under construction at a given time.

(3) The provisions of paragraphs (d)(2) and (4) of this section apply to this paragraph (f).

(g) *Rehabilitation loans.* Loans to finance substantial alteration, repair or improvement of primarily residential property may be made within the maximum loan-to-value ratios permitted for loans under paragraphs (a) and (b) of this section and shall be repayable within 3 years (18 months for a single family dwelling).

(h) *Combination loans.* (1) Loans authorized by this section may be combined, with the term of each loan beginning at the end of the term of the preceding loan.

(2) Development, lot and site, and construction loans combined with permanent financing loans, or made to borrowers who have secured permanent financing from other lenders, may be made within the maximum loan-to-value ratios permitted for loans under paragraph (a) and (b) of this section: *provided,* that disbursement of loan proceeds in excess of 80 percent of the value of the security property shall not be made until substantial completion of the construction.

(3) For a combination of loans to finance development and loans on building lots and sits and/or construction loans, whether or not development has been completed, (i) beginning not more than 3 years after the first disbursement of loan proceeds, the principal shall be amortized monthly at a rate of at least 1½ percent of that portion of the loan balance applicable to any home, including the building site, and (ii) beginning not more than 4 years after the first disbursement of any loan proceeds, principal shall be amortized monthly at a rate of at least 1½ percent of that portion of the loan balance not applicable to the construction of any home and its building site.

(i) See § 545.6–5 of this Part for residential loan leeway authority.

4. Delete § 545.6–2a, and revise § 545.6–3 by substituting a new text, to read as follows:

§ 545.6–2a Loans on cooperatives [Deleted]

§ 545.6–3 Home improvement loans.

An association may invest in any loans, with or without security, for residential real property alteration, repair or improvement, or for equipping residential real property, with equal installments payable at least quarterly, the first installment due no later than 120 days from the date the loan is made and the final installment due no later than 20 years and 32 days from such date. However, the loan contract may provide for a first and/or final installment in an amount other than that of the regular installment, but such installment shall not be less than one-half of, nor more than one and one-half times, the amount of the regular installment.

§ 545.6–4 [Amended]

5. Amend § 545.6–4(b) by deleting the phrase "under § 541.9 of this subchapter" in subparagraph (4), and changing the reference from § 545.6–1(a) to § 545.6–2(a) in subparagraph (5) thereof.

§ 545.6-4a [Amended]

6. Amend § 545.6-4a by deleting the phrase "of up to 30 years" in paragraph (b) thereof.

7. Revise §§ 545.6-5 and 545.6-6 by substituting new texts to read as follows:

§ 545.6-5 Leeway authority for loans relating to residential real property and farms.

(a) *Loans without requirement of security—for construction purposes.* In additional to loans in which it may invest under other provisions of this Part, an association may invest an amount not exceeding the greater of its net worth or 5 percent of assets in loans for construction, adding to, improving, altering, repairing, equipping or furnishing residential real property, where the association relies substantially for repayment on: (1) the borrower's general credit standing and forecast of income, with or without other security, or (2) other assurances of repayment, including a third-party guaranty or similar obligation.

(b) *Nonconforming secured loans.* In addition to loans in which it may invest under other provisions of this Part, an association may invest an amount not exceeding the greater of its net worth or 5 percent of assets in loans, advances of credit, and interests therein, secured by residential real property and real property used or to be used for commercial farming enterprises, which are not otherwise authorized under this Part.

§ 545.6-6 Commercial real estate loans.

(a) Loans secured by first liens on other improved real estate, as defined in § 541.17(a) and (c) of this subchapter, shall not exceed 90 percent of the value of the security property, and shall be repayable within 30 years: provided, that nonamortized loans shall not exceed 60 percent of value and shall be repayable within 5 years, with interest payable at least semi-annually.

(b) An association's aggregate investment under this section shall not exceed 20 percent of assets.

(c) See § 545.6-5 for additional authority to invest in real estate loans to commercial farming enterprises, and § 545.6-10 for additional authority to invest in community development loans.

8. Delete §§ 545.6-7, 545.6-8 and 545.6-12, and revise paragraph (a) of § 545.6-13, to read as follows:

§ 545.67-7 Insured loans to finance land development [Deleted]

§ 545.6-8 Housing facilities for the aging [Deleted]

§ 545.6-12 Nonconforming secured loans and loans without requirement of security. [Deleted]

§ 545.6-13 Farmers Home Administration rural housing program guaranteed loans.

(a) *General.* An association may invest in loans on residential real estate guaranteed under the Farmers Home Administration (FmHA) Rural Housing Program, without regard to other provisions in this Part.

* * * * *

§§ 545.7-6 and 545-7-7 [Amended]

9. Amend § 545.7-6 by deleting paragraph (d)(1) and paragraph (e)(2)(ii); amend § 545.7-7 by deleting paragraph (a)(3); and revise § 545.7-9 as follows:

§ 545.7-9 Collateral loans.

An association may make a collateral loan (secured by assignment of secured loans) if it could, under applicable law and regulations, make or purchase the underlying assigned loan(s).

10. Delete §§ 545.8, 545.8-1, 545.8-6, and 545.8-7, and revise the title of § 545.8-3, as follows:

§ 545.8 Participations. [Deleted]

§ 545.8-1 Purchase of loans. [Deleted]

§ 545.8-3 Contract provisions for real estate loans.

§ 545.8-6 Lending area. [Deleted]

§ 545.8-7 Percentage limitation on real estate loan investments. [Deleted]

Federal Savings and Loan Insurance Corporation

PART 563—OPERATIONS

11. Revise § 563.9 to read as follows:

§ 563.9 Nationwide lending.

An insured institution may invest in, sell, purchase, participate or otherwise deal in loans on security property located outside its normal lending territory but within the United States or its territories and possessions.

12. Delete §§ 563.9-1 and 563.9-2 as follows:

§ 563.9-1 Participation loans. [Deleted]

§ 563.9-2 Sales of interest in loans on real estate located outside normal lending territory. [Deleted]

13. Amend § 563.9-3 by deleting "$100,000" and substituting "$200,000" in paragraph (b) thereof.

(Sec. 10, 47 Stat. 725 (12 U.S.C. 1421 et seq.) sec. 5, 48 Stat. 132 (12 U.S.C. 1464), as amended by sec. 401, 94 Stat. 160; secs. 402, 403, 407, 48 Stat. 1256, 1257, 1260, as amended (12 U.S.C. 1725, 1726, 1730), Reorg. Plan No. 3 of 1947, 12 F.R. 4891, 3 CFR, 1943-48 comp., p. 1071)

By the Federal Home Loan Bank Board.

Robert D. Linder,

Acting Secretary.

[FR Doc. 80-23735 Filed 8-5-80; 8:45 am]

BILLING CODE 6720-01-M

---

12 CFR Parts 541, 545, 561, 563

[No. 80-468]

Federally-Chartered Saving and Loan Associations and Mutual Savings Banks; Investment in Consumer Loans, Commercial Paper and Corporate, Debt Securities

Dated: July 31, 1980.

AGENCY: Federal Home Loan Bank Board.

ACTION: Proposed regulations.

SUMMARY: These regulations are proposed to implement section 401 of Title IV of the Depository Institutions Deregulation and Monetary Control Act of 1980 which authorizes Federally-chartered savings and loan associations and mutual savings banks, subject to a 20 percentage-of-assets limitation, to make secured or unsecured consumer loans and to invest in, sell, or hold commercial paper and corporate debt securities as defined and approved by the Federal Home Loan Bank Board. These regulations also implement the Federal Financial Institutions Examination Council's recommended "Uniform Policy for Classification of Consumer Installment Credit Based on Delinquency Status."

DATE: Comments must be received by: October 6, 1980.

ADDRESS: Please send comments to the Office of the Secretary, Federal Home Loan Bank Board, 1700 G Street, N.W., Washington, D.C. 20552.

FOR FURTHER INFORMATION CONTACT: Ann Hume Loikow, Office of General Counsel, telephone number (202) 377-6448, Federal Home Loan Bank Board, 1700 G Street N.W., Washington, D.C. 20552.

SUPPLEMENTARY INFORMATION:

Background

Section 401 of The Depository Institutions Deregulation and Monetary Control Act of 1980 ("Act"), Pub. L. 96-221, 94 Stat. 132, greatly expanded the investment powers of Federally-chartered savings and loan associations and mutual savings banks. Among other things, section 401 of the Act completely

revised section 5(c) of the Home Owners Loan Act of 1933 (12 U.S.C. § 1464(c)) which contains the basic investment authority for Federally-charter savings and loan associations. A new subparagraph (B) was added to section 5(c)(2), the category of investments limited to 20 percent of assets, which authorizes Federals to engage in consumer lending and to invest in, sell, or hold commercial paper and corporate debt securities as defined and approved by the Board. These increased investment powers will assist associations in meeting their objective of financing the nation's housing needs.

Since a major purpose of revising section 5(c) and expanding Federals' investment powers was to make them more competitive with other financial institutions by enabling them to offer the consumer convenient one-stop financial services, the Board proposes to implement this new authority with a broad regulation and to leave the detailed decisions regarding exercise of this new lending and investment authority to each institution's management.

Consumer Lending

Definitions

Although Federals already had authority before the passage of this Act to make certain specialized kinds of consumer loans such as educational loans, home improvement loans, equipping loans, and mobile home loans, the only way in which a Federally chartered association could engage in generalized consumer lending was by investing in a service corporation which, under § 545.9-1 of the Rules and Regulations for the Federal Savings and Loan System ("Federal Regulations") (12 CFR 545.9-1), was authorized to originate, purchase, sell and service consumer loans in general, as well as make these more limited types of loans to consumers. Subparagraph (a)(3) of § 545.9-1 contains the Board's only definition of "consumer loan." Since generalized consumer lending is now authorized for Federals, as well as for their service corporations, the Board proposes to delete this provision and to add a new definition of "consumer loan," applicable to both Federals and their service corporations.

The proposed new definition is derived from the Act's language and the Federal Reserve Board's definitions of similar terms in its consumer protection regulations (Regulations B and Z in particular). Associations will now be authorized to make both secured and unsecured consumer loans. The major difference from the Federal Reserve Board's definitions is that loans secured by liens on real estate, as defined in § 541.14 of the Federal Regulations, are excluded. In addition, the proposed definition of "consumer loan" is broader than that found in § 545.9-1 since it does not limit secured consumer loans as § 545.9-1 does to those which are "secured by goods used or bought primarily for personal, family or household purposes." Thus, so long as a loan is not a loan secured by a lien on real estate and is made for personal, family or household purposes, which could include debt consolidation, there is no restriction on what can be used for security, if any is required.

Under the new definition, a consumer loan is a type of "consumer credit," which is a broader term and includes other types of loans which are separately authorized to be made to consumers. A consumer loan may be made as either "open-end" or "closed-end consumer credit." New definitions of these terms are proposed to be added to Part 561 of the Regulations of the Federal Savings and Loan Insurance Corporation ("Insurance Regulations"). The proposed definitions are modelled on the Federal Reserve Board's definitions in Regulations B and Z, with which associations are already familiar, and are needed to implement the "Uniform Policy for Classification of Consumer Installment Credit Based on Delinquency Status" recommended by the Federal Financial Institutions Examination Council, which is incorporated into this proposal.

Another new definition has also been proposed to be added to Part 541 of the Federal Regulations. The statutory definition of "Loans," which states that any reference to a loan in section 5(c) of the Home Owners Loan Act also authorizes an association to have an interest in such loan, has been added to make it clear in the regulations that an association may participate in any loan it is authorized to invest in or make.

Consumer Loan Authority

A new § 545.7-10, which contains the basic authorization for, and limits on, an association's exercise of the new consumer loan authority, is proposed to be added to the subdivision "Other Loans" of Part 545 (Operations) of the Federal Regulations. Since a large amount of consumer lending is indirect, where the dealer enters into an arrangement with a lender under which the dealer directly arranges the consumer loan that the lender then acquires, associations would be at a competitive disadvantage if they were authorized only to make direct consumer loans. Thus, both direct and indirect consumer lending will be authorized. The only restrictions proposed are the following: such loans would come within the 20-percentage-of-assets limitation contained in the Act; a requirement that before indirect loans can be made through a dealer, the dealer must have been approved by the association's board of directors; a limitation on the total balances of all outstanding unsecured consumer loans to one borrower; and a requirement that all consumer loans that the assoociation makes—i.e., originates, purchases, sells, services, and participates in—conform to the association's written underwriting standards and are loans which the association could make directly.

The proposed requirement that the association's board of directors approve the dealer with whom the association engages in indirect consumer lending is designed to ensure that the board of directors is aware of the various arrangements the association has made to make consumer loans and that the association has examined the dealer's reliability and financial responsibility so that such arrangements are carefully and prudently considered.

The proposed limitatin on unsecured loans to one borrower would limit the association's authority to make unsecured consumer loans to the lesser of one-fourth of one percent of the association's assets or five percent of its net worth. These two measures are roughly equivalent and place an overall limitation on unsecured loans to the same borrower which is more restrictive that the restriction found in § 563.9-3 of the Insurance Regulations. Under that section, all associations may have at least $100,000 in total balances of all outstanding loans to the same borrower and may increase that minimum to an amount equal to the lesser of ten percent of the association's withdrawable accounts or an amount equal to the association's net worth. Under the proposed limitation, assuming a mature association whose net worth is five percent of assets, for example, an association with $100 million in assets could not make more than $250,000 in unsecured consumer loans to the same borrower, an association with $50 million in assets could not make more than $125,000 in sch loans, and an association with $10 million in assets could only make a maximum of $25,000 in such loans to the same borrower.

The more restrictive provisions of this section are proposed as a reasonable limitation on the amount of an association's portfolio that can be concentrated in *unsecured* personal loans to the *same* person. This limitation

does not prevent an association from making additional *secured* loans to a borrower, since with a secured loan there is some sort of collateral to protect the association's interest if the borrower defaults. Section 563.9–3 would still limit the total amount of all loans which an association would be authorized to make to the same borrower.

No limitation (other than the overall 20 percent-of-assets limit for consumer loans) is proposed to be placed on the total amount of unsecured consumer loans an association can make to all borrowers, since such a limitation would have little practical effect unless it reached the unsecured loans made in connection with credit cards and NOW accounts, neither of which is subject under the Act to a percentage-of-assets limitation. However, the Board recognizes that it is normal business practice for a lender to place relatively low limits, in the range of several hundred to several thousand dollars, on such extensions of credit when an account is opened, so the danger of overconcentration in loans dependent on the credit of the same person is not as much of a problem as it is with unsecured loans made under § 545.7–10.

Although banks and other lenders often finance a dealer's inventory in order to induce the dealer to allow them to finance individual consumer loans, the Board is not proposing to authorize associations to do inventory financing because the Board does not consider inventory financing to fall within the Act's requirement that the loan be "for personal, family, or household purposes." Section 545.7–6 of Federal Regulations pertaining to mobile home financing, does authorize associations to finance a mobile home dealer's inventory. However, the language of section 5(c)(1)(J) of the Home Owners Loan Act, which that regulation implements, is much broader than that of section 5(c)(2)(B), which authorizes consumer lending, since it authorizes associations to make loans "*for the purpose of* manufactured home financing" (emphasis added). Section 5(c)(2)(B) is much more narrowly written and only authorizes associations to "*make* secured or unsecured loans for personal, family, or household purposes" (emphasis added). Since Congress's intention in authorizing associations to make consumer loans was to make them a "family finance center," which in one place could meet all the financial needs of the consumer, the Board feels that section 5(c)(2)(B) cannot be read as authorizing what is, in effect, a commercial loan.

The Board has received a number of inquiries about whether an association could finance loans secured by interval ownership interests in real estate. The Board has previously taken the position that a substantial portion of such loans is made for the purchase of benefits and services in addition to the real estate itself and that this portion, which is not secured by the real estate, must be considered to be an unsecured consumer loan which, prior to the enactment of the Act and and the issuance of these regulations, an association was not authorized to make. Because of the administrative difficulties in separating the real estate portion from the non-real estate portion of such loans, the Board has now determined that the total amount of loans made to purchase an interval ownership in real estate should be included within the category of unsecured consumer loans which an association will be authorized to make by this new section.

There may be some confusion as to what types of loans must be put into the 20% consumer loan category contained in § 545.7–10, since a number of other loans which Federals are authorized to make under separate statutory provisions, such as educational loans and equipping loans, are commonly thought of as "consumer loans" because they are loans to a natural person for personal, family, or household purposes. Because these specific lending activities have been expressly reauthorized in the Act, the Board has concluded that in order to provide associations with the maximum degree of flexibility associations should be given the option, under section 545.7–10(b), of choosing the category in which to place a particular loan.

Classification of Delinquent Consumer Loans

On February 7, 1980, the Federal Financial Institutions Examination Council recommended that all of the Federal financial regulatory agencies adopt a uniform examination policy on the classification of delinquent consumer installment loans. The Board declined to take action at that time since Congress had not yet taken final action to authorize Federals to make consumer loans. Since that has now occurred, the Board is proposing to include in the proposed regulations the provisions of the uniform policy, slightly modified to conform to the format and nomenclature of the regulatory and examination process pertaining to savings and loan associations.

The Examination Council recommended the establishment of uniform guidelines for the classification of installment credit based upon delinquency status, in order to provide uniform treatment of such loans by all insured financial institutions. The Examination Council's approach in determining how to classify delinquent consumer loans parallels, in principle, current banking practices and recognizes the statistical validity of measuring losses for both open-end and closed-end credit predicated on past-due status. Although the three Federal banking agencies have historically relied upon delinquency status as a major determinant in classifying consumer installment credit, no interagency standard has ever been used.

The Board recognizes that evaluating the quality of a consumer credit portfolio on a loan-by-loan basis is inefficient and unnecessary. Therefore, in order to give this policy equal weight with the Board's other accounting requirements which have been issued as regulations, the Board has chosen to propose that the Council's Uniform Policy be added as an amendment to the Insurance Regulations which would allow the Board's existing method of classifying loans to be modified to conform to the Examination Council's recommended policy.

Several new definitions are proposed to be added to Part 561 of the Insurance Regulations. Since the Uniform Policy divides "consumer credit," a broader concept than "consumer loan," as noted above, into "open-end" and "closed-end" credit, definitions of these three terms, derived from the Federal Reserve Board's Regulations B and Z, have been proposed to be added to Part 561. Unlike the Federal Reserve Board's regulations, however, loans secured by liens on real estate as defined in § 541.14 are excluded from the definition of "consumer credit." Thus, the types of loans which are subject to the proposed delinquency classification system are non-real estate loans for personal, family, or household purposes, including consumer loans, educational loans, unsecured loans for real property alteration, repair or improvement, or for the equipping of real property, and credit extended in connection with credit cards. Because the Board's present system for classifying loans already specifically provdies for the inclusion of delinquent mobile home loans (§§ 561.15 (i), (j), and (k)), mobile home loans are excluded from the term "consumer credit" and are thus not subject to the proposed classification system.

A proposed new definition of "slow consumer credit" (§ 561.16a), which

corresponds to the Uniform Policy's definition of "substandard" consumer credit, has also been developed. The current definition of "scheduled items" would be amended so "slow consumer credit" would be counted in determining the amount of an association's scheduled items. Another new definition, "consumer credit classified as a loss" (§ 561.16b), is also to be added to Part 561 in connection with the proposed new § 563.46, which would require an association to charge off consumer credit classified as a loss to its net worth or against its current earnings. This proposed charge-off conforms to generally accepted accounting principles and to the banking industry's practices. An illustrative chart showing when a delinquent loan is to be classified as "slow" or as a "loss" has been included in proposed § 561.16a and § 561.16b.

Nevertheless, the Board recognizes that there may be instances, particularly where significant amounts are involved, that may warrant exceptions to the formula contained in the proposed regulations which would recognize those individual situations. Thus, proposed § 561.16a and § 561.16b would not require an association to classify a loan as "slow consumer credit" or as a "loss" if the association could clearly demonstrate that repayment would occur regardless of delinquency status. Examples of such situations might include: loans well secured by collateral and in the process of collection; loans supported by valid guarantees or insurance; and loans where claims have been filed against solvent estates.

The Board also recognizes that even a well managed association is likely to have a higher rate of slow consumer loans than slow real estate loans and that under the Board's regulations, associations are prohibited from engaging in certain activities if their scheduled items, which includes their slow loans and slow consumer loans, reach a certain level. Although the Board has proposed amendments to other sections of its regulations which will somewhat limit the impact of excessive scheduled items, the Board is considering ways to reflect this higher normal level of slow consumer loans so that associations operating well-managed consumer loan programs will not be subject to unreasonable limitations on their activities. Comments as to how this should be accomplished and what is an acceptable level of slow consumer loans are specifically solicited. However, it should be noted that the Board believes that the scheduled items computation is an important tool in determining an association's safety and soundness and that all scheduled items, including all slow consumer loans, should be fully reported and reflected in an association's net worth requirements.

Commercial Paper and Corporate Debt Securities

Definitions

Proposed new definitions of "commercial paper" and of "corporate debt securities" would be added to Part 541 of the Federal Regulations. In order to conform to the general practices of the securities industry, the proposed definition of "commercial paper" (§ 541.27) was derived from section 3(a)(3) of the Securities Act of 1933 (15 U.S.C. 77(c)(a)(3)) which exempts certain commercial paper with a maturity of nine months or less from the registration requirements of that act. Use of this definition would also be consistent with the amendments to section 5A(b)(1) of the Federal Home Loan Bank Act ("Bank Act") (12 U.S.C. 1425a(b)) now pending before Congress which would allow the Board to allow "highly rated commercial paper with 270 days or less remaining until maturity" to be counted for liquidity purposes.

Consistent with the goal of providing competitive equality with banks, the proposed new definition of "corporate debt securities" to be added as § 541.28 has been derived from the definition of "investment securities" contained in the national banking laws and regulations (12 U.S.C. 24 and 12 CFR 1.3(b)). Although there is no generally accepted limitation on the maturity of corporate debt securities, the proposed amendments now pending to section 5A(b)(1) of the Bank Act would also limit corporate debt obligations allowed to be used for liquidity purposes to those with three years or less remaining until maturity. Although the practical effect of enacting these amendments would be to encourage associations to invest in short-term securities, the Board feels that an additional requirement is needed to encourage associations to acquire short-term assets so that the maturities of the assets and liabilities in their portfolios will be more evenly balanced, with these new assets reflecting market rates much as the new savings certificates do. Because the Board feels that it is desirable to grant associations some flexibility in making these investments while encouraging investment in shorter-term securities, the Board has chosen to include in paragraph (b) of this section a requirement that the average maturity of such securities in an association's portfolio be limited to five years. By limiting the average maturity of the corporate debt securities in an association's portfolio rather than the maturity of each security, an association may invest in longer term securities, provided that such investments are offset by investments in much shorter term securities.

The Board has included the requirement that the corporate debt securities be "not predominantly speculative in nature." This is derived from the Comptroller of the Currency's regulatory definition of the types of investment securities in which national banks may invest (12 CFR 1.3(b)). This requirement is included to reinforce the Board's expectation that associations will exercise prudent judgment in exercising their new authority to invest in both commercial paper and corporate debt securities. The Board believes that the exercise of prudence by associations, together with the other limitations contained in § 545.9–4(b), will minimize or eliminate instances in which an association's corporate debt investment might be regarded as speculative.

Authorization To Invest in Commercial Paper and Corporate Debt Securities

A new § 545.9–4 is proposed to be added to the "Other Investments" section of Part 545 (Operations) of the Federal Regulations. Paragraph (a) of this section contains the general authorization for Federals to invest in, sell, or hold commercial paper and corporate debt securities as defined in § 541.27 and § 541.28 respectively, subject to the Act's 20 percentage-of-assets limitation and the limitations contained in paragraph § 545.9–4(b). The 20 percentage-of-assets limitation applies to the total investment under § 545.7–10 (Consumer loans) and § 545.9–4 (Commercial paper and corporate debt securities), added together, as provided by the Act. Federals are already authorized to issue their own commercial paper by § 545.24 (Borrowing, issuing obligations, and giving security), provided that the issuance complies with the provisions of § 563.8 (Borrowing limitations).

There are six proposed limitations, other than those contained in the definitions, on investments in commercial paper and corporate debt securities. First, as with investments in state and local government obligations (§ 545.7–11(b)(1)), at the time of purchase, such investments would be required to fall within certain grades as rated by nationally recognized investment rating services. Investments in commercial paper would be limited to

those which are rated in one of the top two such grades, and investments in corporate debt securities to those which are rated in one of the top four such grades. At least two such rating companies must have published ratings of the investments placing them in the required grades. The Board believes that this approach will afford Federals a range of investment options consistent with safe and sound operations.

Second, the commercial paper or corporate debt securities in which Federals could invest would be required to be denominated in dollars and be issued by a corporation domiciled in the United States. This provision would limit investments to domestic paper and securities and eliminate the problems of dealing with ever-changing international exchange rates when trying to evaluate such an investment.

Third, a limit would be placed on an association's total investment in the commercial paper and debt securities of any one issuer. This limitation is similar to the "loans to one borrower provisions" of § 563.9-3 and the proposed limitation on unsecured consumer loans to one borrower in § 545.7-10(c). Most states have incorporated similar limitations in their state banking laws to prevent undue concentration of an institution's portfolio in the issues of one issuer. The Board is proposing that an association be limited to investing an amount equal to not more than one percent of its assets in the commercial paper and debt securities of any one issuer. As with § 563.9-3(a)(1), the term "issuer" includes any person or entity affiliated with the issuer. This limitation is consistent with the sixth proposed limitation, which would require associations to exercise prudent judgment in making investments in commercial paper and corporate debt securities. Such regulatory language is found in most state laws and is consistent with the Comptroller's requirement that national banks exercise "prudent banking judgment" in their investments.

Fourth, associations would be authorized to invest in corporate debt securities which are convertible into stock if several conditions are met. First, the securities must conform to all the other limitations contained in paragraph (b) of § 545.9-4. In addition, they must not be convertible at the option of the issuer, a limitation the Comptroller of the Currency's regulations also places on national banks' investments in convertible securities. This ensures that the exercise of the conversion feature is solely in the hands of the association. However, since Federals have not been given the statutory authority to invest in equity securities, two additional limitations are proposed to be included. The association would be prohibited from exercising the conversion feature itself and could only invest in convertible securities that are traded on a national exchange. The latter limitation would ensure that the security was readily marketable so that, although the association could not convert it itself, it could easily sell it to another investor who could.

The fifth limitation, which has already been discussed, limits the average maturity of all corporate debt securities contained in an association's portfolio to five years.

Accordingly, the Board hereby proposes to amend the Rules and Regulations for the Federal Savings and Loan System by deleting § 545.9-1(a)(3) and adding new §§ 541.25, 541.26, 541.27, 541.28, 545.7-10 and 545.9-4; and to amend the Rules and Regulations of the Federal Savings and Loan Insurance Corporation by adding new §§ 561.38, 561.39, 561.40, 561.16a, 561.16b, and 563.46, and amending § 561.15. Such new and amended sections shall read as follows:

§ 545.9-1 [Amended]

1. Delete the present subparagraph (3) to paragraph (a) of § 545.9-1 and renumber the present subparagraphs (4) through (8) as (3) through (7), respectively.

2. Add the following new definitions to Part 541:

§ 541.25 Consumer loan.

A secured or unsecured loan to a natural person for personal, family, or household purposes. Such loan is a type of consumer credit, as defined in § 561.38, and may be made as either open-end or closed-end consumer credit, as defined in § 561.39 and § 561.40.

§ 541.26 Loans.

Obligations and extensions or advances of credit; and any reference to a loan or investment includes an interest in such a loan or investment.

3. Add a new § 545.7-10 to read as follows:

§ 545.7-10 Consumer loans.

(a) *General.* A Federal association may make direct or indirect consumer loans; *provided:* (1) that at any one time the total investment made under this section and § 545.9-4 ("Commercial paper and corporate debt securities"), added together, shall not exceed 20 percent of an association's assets; and (2) that before indirect loans are made through a dealer, the dealer is approved by the association's board of directors. The authority to make a consumer loan includes the authority to originate, purchase, sell, service, and participate in such loans; *provided,* such loans conform to the provisions of this section and the association's written underwriting standards.

(b) *Relationship to other provisions of this chapter.* If a loan which may be made under this section is also authorized to be made under another section, an association shall have the option of choosing under which applicable section, and its respective percentage of assets limitation, if any, the loan shall be made.

(c) *Limitation on unsecured loans to one borrower.* The total balances of all outstanding loans, as defined in § 563.9-3(a)(2), which may be made under this section in unsecured loans to one borrower, as defined in § 563.9-3(a)(1), is limited to the lesser of ¼ of one percent of an association's assets or five percent of its net worth.

4. Add the following new definitions (§§ 561.38, 561.39, 561.40, 561.16a, and 561.16b) to Part 561:

§ 561.38 Consumer credit.

Credit extended to a natural person for personal, family, or household purposes, except for loans secured by liens on real estate as defined in § 541.14 and chattel liens secured by mobile homes. Among the types of credit included are consumer loans, as defined by § 541.25; educational loans; unsecured loans for real property alteration, repair or improvement, or for the equipping of real property; and credit extended in connection with credit cards.

§ 561.39 Open-end consumer credit.

Consumer credit extended on an account under a plan in which repeated transactions are reasonably contemplated, which describes the terms of such transactions and allows the consumer to pay in full without penalty or in installments, and which provides for a finance charge which may be computed from time to time on the outstanding unpaid balance. The term does not include negotiated advances under an open-end real estate mortgage.

§ 561.40 Closed-end consumer credit.

Consumer credit other than open-end consumer credit.

§ 561.16a Slow consumer credit.

The term "slow consumer credit" means closed-end consumer credit delinquent 90 to 119 days (4 monthly payments) and open-end consumer

credit delinquent 90 to 179 days (4 to 6 zero billing cycles). For the purposes of computing delinquency, a payment of 90 percent or more of the contractual payment will be considered as a full payment. If an association can clearly demonstrate that repayment would occur regardless of delinquency status—for example the loan is well secured by collateral and is in the process of collection; the loan is supported by a valid guarantee or insurance; or it is a loan where the claims have been filed against a solvent estate—then such loan need not be classified as "slow consumer credit." The following chart illustrates the delinquency computation:

Closed-End Consumer Credit

Due date	Period	Delinquency status	Classification
March 10	March 10 to April 9	Not delinquent	
April 10	April 10-May 9	30 days or 2 payments	
May 10	May 10-June 9	60 days or 3 payments	
June 10	June 10-July 9	90 days or 4 payments	Slow.

Open-End Consumer Credit

Statement	Day	Zero billing cycle	Payment record	Days delinquent	Classification
1	1			0	
2	30	1	No payment	[1]5	
3	60	2	No payment	30	
4	90	3	No payment	60	
5	120	4	No payment	90	Slow.
6	150	5	No payment	120	Slow.
7	180	6	No payment	150	Slow.

[1] For purposes of illustration, assume customer has 25 days in which to pay before payment is considered delinquent.

§ 561.16b Consumer credit classified as a loss.

The term "consumer credit classified as a loss" means closed-end consumer credit delinquent 120 days or more (5 monthly payments or more) and open-end consumer credit delinquent 180 days or more (7 zero billing cycles or more). For the purposes of computing delinquency, a payment of 90 percent or more of the contractual payment will be considered as a full payment. If an association can clearly demonstrate that repayment would occur regardless of delinquency status—for example, the loan is well secured by collateral and is in the process of collection; the loan is supported by a valid guarantee or insurance; or it is a loan where claims have been filed against a solvent estate—then such loan need not be classified as a loss. The following chart illustrates the delinquency computation:

Closed-End Consumer Credit

Due date	Period	Delinquency status	Classification
March 10	March 10 to April 10	Not delinquent	
* * *	* * *	* * *	
June 10	June 10-July 9	90 days or 4 payments	Slow.
July 10	July 10-August 9	120 days or 5 payments	Loss.[1]
August 10	August 10-September 9	150 days or 6 payments	Loss.[1]

Open-End Consumer Credit

Statement	Day	Zero billing cycle	Payment record	Days delinquent	Classification
1	1			0	
* *	*	*	* *	*	
7	280	6	No payment	150	Slow.
8	210	7	No payment	180	Loss.[1]
9	240	8	No payment	210	Loss.[1]

[1] Charge-off as required by § 563.46 occurs.

5. Amend paragraph (a) of § 561.15 to read as follows:

§ 561.15 Scheduled items.

The term "scheduled items" means:

(a) Slow consumer credit, slow loans (other than loans specified in paragraph (b) of this section),

* * * * *

6. Add a new § 563.46 to read as follows:

§ 563.46 Charge-off of consumer credit classified as a loss.

When consumer credit is classified as a loss, as defined in § 561.16b, it shall be charged to the association's net worth or against its current earnings.

7. Add the following new definitions (§§ 541.27 and 541.28) to Part 541:

§ 541.27 Commercial paper.

Any note, draft, bill of exchange, or banker's acceptance which arises out of a current transaction or the proceeds of which have been or are to be used for current transactions, and which has a maturity at the time of issuance of not exceeding nine months, exclusive of days of grace, or any renewal thereof the maturity of which is likewise limited.

§ 541.28 Corporate debt security.

A marketable obligation, evidencing the indebtedness of any corporation in the form of bonds, notes and/or debentures which is commonly regarded as a debt security and is not predominantly speculative in nature.

8. Add a new § 545.9-4 to read as follows:

§ 545.9-4 Commercial paper and corporate debt securities.

(a) *General.* A Federal association may invest in, sell, or hold commercial paper and corporate debt securities, including corporate debt securities convertible into stock, subject to the limitations set forth in paragraph (b); *provided,* that at any one time the total investment made under this section and § 545.7-10 ("Consumer loans"), added together, shall not exceed 20 percent of an association's assets.

(b) *Limitations.* (1) As of the date of purchase, as shown by the most recently published rating made of such investments by at least two nationally recognized investment rating services, the commercial paper must be rated in either one of the top two grades and the corporate debt securities must be rated in one of the four highest grades.

(2) The commercial paper or corporate

debt securities are denominated in dollars and are issued by a coporation domiciled in the United States.

(3) At any one time, an association's total investment in the commercial paper and coporate debt securities of any one issuer, or issued by any person or entity affiliated with such issuer, shall not exceed one percent of the association's assets.

(4) Investments in corporate debt securities convertible into stock are subject to the following additional limitations: (i) Purchase of securities convertible into stock at the option of the issuer is prohibited; (ii) such securities must be traded on a national exchange; and (iii) associations are prohibited from exercising the conversion feature.

(5) At any one time, the average maturity of all corporate debt securities in an association's portfolio may not exceed five years.

(6) An association shall exercise prudent judgment in making investments under this section.

(Sec. 5(c)(2)(B), 48 Stat. 132, as amended by Title IV, § 401, Pub. L. 96-221, 94 Stat. 151; § 5(d), 48 Stat. 132, as amended (12 U.S.C. 1464(d)); §§ 402, 403, 48 Stat. 1256, 1257, as amended (12 U.S.C. 1725, 1726); Reorg. Plan No. 3 of 1947, 12 FR 4981, 3 CFR 1943-48 Comp., p. 1071).

By the Federal Home Loan Bank Board.

Robert D. Linder,

Acting Secretary.

[FR Doc. 80-23734 Filed 8-5-80; 8:45 am]

BILLING CODE 6720-01-M

DEPARTMENT OF JUSTICE

Office of the Attorney General

28 CFR Part 16

[AAG/A Order No. 54-80]

Exemption of Records Systems Under the Privacy Act

AGENCY: Department of Justice.

ACTION: Proposed rule.

SUMMARY: In the Notice Section of today's Federal Register, the Department of Justice proposes to exempt a new system of records, the DEA Regional Automated Intelligence Data System (RAIDS), JUSTICE/DEA-028 from the provisions of 5 U.S.C. 552a(c)(3) and (4), (d), (e)(1), (2) and (3), (e)(4)(G) and (H), (e)(5) and (8), (f) (g) and (h) pursuant to 5 U.S.C. 552a(j) and (k). These exemptions are required in order to ensure the confidentiality of intelligence and narcotics law enforcement.

DATES: All comments must be received by September 5, 1980.

ADDRESS: All comments should be addressed to the Administrative Counsel, Justice Management Division, Department of Justice, 10th and Constitution Avenue, N.W., Room 1214, Washington, D.C. 20530.

FOR FURTHER INFORMATION CONTACT: William J. Snider (202-633-3452).

The authority for this proposed rule is 5 U.S.C. 552a. Accordingly, it is proposed that 28 CFR 16.98 be amended by adding paragraph (c)(16) as follows:

§ 16.98 Exemption of Drug Enforcement Administration Systems.

* * * * *

(c) * * *

* * * * *

(16) Regional Automated Intelligence Data System (RAIDS) (JUSTICE/DEA-028).

* * * * *

Dated: July 24, 1980.

William D. Van Stavoren,

Acting Assistant Attorney General for Administration.

[FR Doc. 80-23696 Filed 8-5-80; 8:45 am]

BILLING CODE 4410-09-M

28 CFR Part 50

Open Judicial Proceedings; Policy

AGENCY: Department of Justice.

ACTION: Proposed rule.

SUMMARY: This section establishes guidelines for Government attorneys for consenting to, or moving for, the closure of judicial proceedings. The policy adopts a strong presumption that judicial proceedings should be open to the public unless closure is plainly essential to the interests of justice. Government attorneys may not move for or consent to closure of a portion of a judicial proceeding without the approval of the Deputy or Associate Attorney General.

DATES: Comments are invited from the public and the media. Comments should be received by the Department of Justice by September 15, 1980.

ADDRESS: Comments should be submitted to: Larry L. Simms, Deputy Assistant Attorney General, Office of Legal Counsel, Department of Justice, Constitution Avenue and 10th Street, NW., Washington, D.C. 20530.

Comments received in response to this notice will be available for public inspection in the Public Reading Room (Room 1266), Department of Justice, Constitution Avenue and 10th Street, N.W., Washington, D.C. between 9:00 a.m. and 5:30 p.m., Monday through Friday, except on Federal holidays, until the proposed rule is published in final form.

FOR FURTHER INFORMATION CONTACT: T. Alexander Aleinikoff, Attorney-Adviser, Office of Legal Counsel, Department of Justice, Constitution Avenue and 10th Street, NW., Washington, D.C. 20530, (202) 633-2044.

SUPPLEMENTARY INFORMATION: Part 50 of Title 28 of the Code of Federal Regulations is proposed to be amended by adding a new § 50.9, to read as set forth below.

Dated: July 30, 1980.

Benjamin R. Civiletti,

Attorney General.

PART 50—STATEMENTS OF POLICY

It is proposed to add § 50.9 to read as follows:

§ 50.9 Policy with regard to open judicial proceedings.

Because of the vital public interest in open judicial proceedings, the Government has a general affirmative duty to oppose their closure. There is, moreover, a strong presumption against closing proceedings or portions thereof, and the Department of Justice foresees very few cases in which closure would be warranted. The Government should move for or consent to closed proceedings only when closure is plainly essential to the interests of justice. In furtherance of the Department's concern for the right of the public to attend judicial proceedings and the Department's obligation to the fair administration of justice, the following guidelines shall be adhered to by all attorneys for the United States.

(a) These guidelines apply to all federal trials, pre-trial evidentiary hearings, plea proceedings, sentencing proceedings, or portions thereof, except as indicated in paragraph (e) of this section.

(b) A Government attorney has a compelling duty to protect the societal interest in open proceedings.

(c) A Government attorney shall not move for a consent to closure of a proceeding covered by these guidelines unless:

(1) No reasonable alternative exists for protecting the interests at stake;

(2) Closure is clearly likely to prevent the harm sought to be avoided;

(3) The degree of closure is minimized to the greatest extent possible;

(4) The public is given adequate notice of the proposed closure, and the motion for closure is made on the record;

(5) Transcripts of the closed proceedings will be unsealed as soon as the interests requiring closure no longer obtain; and

(6) Failure to close the proceedings will produce

(i) A substantial likelihood of denial of the right of a party to a fair trial,

(ii) A substantial likelihood of imminent danger to the safety of parties, witnesses, or other persons, or

(iii) A substantial likelihood that ongoing investigations will be seriously jeopardized.

(d) A Government attorney shall not move for or consent to the closure of:

(1) A civil proceeding except with the express authorization of the Associate Attorney General, based on articulated findings which meet the requirements of (c) above; or

(2) A criminal proceeding except with the express authorization of the Deputy Attoney General, based on articulated findings which meet the requirements of paragraph (c) of this section.

(e) These guidelines do not apply to:

(1) The closure of part of a judicial proceeding where necessary to protect national security information or classified documents; or

(2) *In camera* inspection, or the receipt, consideration or sealing, during the course of an open proceeding and as governed by substantive or procedural law (including the rules of evidence), of the following: trade secrets or similar commercial information, material which jeopardizes confidential investigative sources and methods, or grand jury information; or

(3) Conferences traditionally held at the bench or in chambers during the course of an open proceeding.

[FR Doc. 80-23670 Filed 8-5-80; 8:45 am]
BILLING CODE 4410-01-M

ENVIRONMENTAL PROTECTION AGENCY

40 CFR Part 52

[FRL 1562-4]

State of Washington; Availability of Implementation Plan Revision

AGENCY: Environmental Protection Agency (EPA).

ACTION: Notice of availability and advance notice of proposed rulemaking.

SUMMARY: EPA announces today receipt of a revision to the Washington State Implementation Plan which describes a strategy for the control of airborne lead within areas of the Central Puget Sound Region.

The public is invited to submit written comments to the record. A Notice of Proposed Rulemaking describing this revision and the action that EPA intends to take regarding this proposed revision will be published in the Federal Register at a later date. A second comment period for submittal of written comments will extend for thirty (30) days after the publication of the Notice of Proposed Rulemaking.

DATE: Preliminary comments on the proposed revisions will be accepted by EPA until such time as EPA publishes its Notice of Proposed Rulemaking. Subsequent to such proposal, EPA will again invite public comment on these proposed revisions to the Washington SIP.

ADDRESSES: The revisions to the Washington State Implementation Plan may be examined during normal business hours at the following locations:

Central Docket Section (#10A-80-10), Environmental Protection Agency, West Tower Lobby, Gallery I, 401 M Street, Washington, D.C. 20460.

Air Programs Branch, Environmental Protection Agency, Region 10, 1200 Sixth Avenue, Seattle, WA 98101.

State of Washington, Department of Ecology, 4224-6th Avenue SE., Rowesix, Bldg. #4, Lacey, WA 98503.

Comments Should Be Addressed To:

Laurie M. Kral, Air Programs Branch, M/S 629, Environmental Protection Agency, 1200 Sixth Avenue, Seattle, WA 98101, Telephone No. (206) 442-1226, FTS: 399-1226.

FOR FURTHER INFORMATION CONTACT: Richard F. White, Air Programs Branch, M/S 629, Environmental Protection Agency, 1200 Sixth Avenue, Seattle, WA 98101, Telephone No. (206) 442-1226, FTS: 399-1226.

SUPPLEMENTARY INFORMATION: Effective October 5, 1978 a National Ambient Air Quality Standard (NAAQS) for airborne lead was established at 1.5 u/m^3 averaged quarterly. Therefore, pursuant to Section 110 of the Clean Air Act, each state is required to submit to EPA an implementation plan to attain and maintain the national standard for lead. This plan must demonstrate attainment of the lead NAAQS by November 5, 1982, and maintenance thereafter.

The revision entitled "Airborne Lead: A Plan for Control," contains control strategies for the Central Puget Sound Region. This revision includes (1) the Interstate-5 nonattainment area for lead in Seattle, and (2) the three-phase plan for reduction in lead emissions from parking lots and RSR Quemetco secondary lead smelter on Harbor Island, Seattle and (3) documentation of available lead data concerning the ASARCo copper smelter in Tacoma. A more detailed description of this revision will be published in the Federal Register at a later date as part of the Notice of Proposed Rulemaking.

The purpose of this Notice is to call the public's attention to the fact that the Airborne Lead Implementation Plan for the Central Puget Sound Region has been formally submitted to EPA by the state and is available for public inspection at the locations listed above. The public is encouraged to submit written comments regarding the proposed revision and thus participate in this rulemaking activity. Those interested may wish to first read the General Preamble for proposed rulemaking published by the EPA on April 4, 1979 (44 FR 20372) which identifies the major considerations that will guide EPA's evaluation of SIP revisions.

(Secs. 110 Clean Air Act (42 U.S.C. 7410 and 7502)).

Dated: July 28, 1980.

Donald P. Dubois,

Regional Administrator.

[FR doc. 80-23747 filed 8-5-80; 8:45 am]
BILLING CODE 6560-01-M

40 CFR Parts 167 and 169

[FRL 1563-5]

Registration of Pesticide Producing Establishments, Submission of Pesticide Reports, Labeling; and Maintenance of Records; Proposed Amendment to Regulations for Registration of Establishments and Maintenance of Records

AGENCY: Office of Enforcement, Environmental Protection Agency (EPA or the Agency).

ACTION: Proposed rule, extension of comment period.

SUMMARY: In the Federal Register of July 9, 1980 (45 FR 46100 EPA proposed to amend its regulations on registration of pesticide producing establishments and recordkeeping (40 CFR Parts 167 and 169) to include producers of active ingredients used in making pesticides. Comments were requested by August 6, 1980. An industry group and companies representing a broad spectrum of the chemical and pesticide industry expressed interest in this proposal and

requested an extension of the comment period. Accordingly, the Agency is extending the comment period to encourage public comment on its proposal.

DATE: Comments on the proposed amendments to 40 CFR Parts 167 and 169 must be received by September 8, 1980.

ADDRESS: Interested persons are invited to participate in this proposed rulemaking by submitting written comments to Mr. Peter J. Niemiec, Pesticides and Toxic Substances Enforcement Division (EN-342), Policy and Strategy Branch, EPA, 401 M Street S.W., Washington, D.C. 20460. All comments filed pursuant to this notice will be available for public inspection in the Pesticides and Toxic Substances Enforcement Division, Room 3624 at the address given above from 8:30 to 4:30 p.m., Monday through Friday.

FOR FURTHER INFORMATION CONTACT: Peter J. Niemiec, Office of Enforcement, Pesticides and Toxic Substances Enforcement Division, EN-342, EPA 401 M Street S.W., Washington, D.C. 20460. (202) 755-9404.

SUPPLEMENTARY INFORMATION: On July 9, 1980, EPA published a proposed amendment to its regulations regarding the registration of pesticide producing establishments and recordkeeping (40 CFR Parts 167 and 169). The primary purpose of this proposed amendment is to require producers of active ingredients used to make pesticides to register their establishments and report their production as well. Congress directed the Agency to register active ingredient producers in the Federal Pesticide Act of 1978, Pub. L. 95-396, 92 Stat. 819, which amended the Federal Insecticide and Rodenticide Act, U.S.C. Section 136 *et seq* (hereinafter, "FIFRA" or "the Act").

Since the Notice of Proposed Rulemaking was published, EPA has received several written and oral requests to extend the comment period for an additional thirty days. The organizations requesting the extension ranged from a manufacturer of pesticides through manufacturers of commodity chemicals, to a trade group for chemical manufacturers. In general, the reason for the request was that the proposed amendments will affect manufacturers not currently regulated under FIFRA. Thus, it was felt that more time was needed to adequately assess the impact of the proposal.

EPA believes that this is a legitimate reason for extending the comment period. In particular, the Agency hopes that the extended comment period will encourage more public comment on the effects of its proposal on the commodity chemical industry. Comments on all other aspects of the proposal are also encouraged.

Dated: August 1, 1980.

Richard O. Wilson,

Acting Assistant Administrator for Enforcement.

[FR Doc. 80-23821 Filed 8-5-80; 8:45 am]

BILLING CODE 6560-01-M

---

40 CFR Part 410

[FRL 1559-4]

Textile Mills Point Source Category Effluent Limitations Guidelines; Pretreatment Standards, and New Source Performance Standards

AGENCY: Environmental Protection Agency.

ACTION: Notice of availability, correction.

SUMMARY: EPA is making available a correction in the development document supporting the Agency's October 29, 1979, proposed regulation (44 FR 62204) implementing Sections 301, 304, 306, and 307 of the Clean Water Act for the textile industry. The purpose of this notice is to clarify the methodology used by the agency to calculate the proposed numerical limitations. EPA is inviting submission of comments relating to the information presented in this notice.

DATE: Comments should be submitted no later than September 5, 1980.

ADDRESS: Comments should be submitted to Mr. James R. Berlow, Effluent Guidelines Division (WH-552), Environmental Protection Agency, 401 M St., S.W., Washington, D.C. 20460.

FOR FURTHER INFORMATION CONTACT: Mr. James R. Berlow, Effluent Guidelines Division (WH-522), Environmental Protection Agency, 401 M Street, S.W., Washington, D.C. 20460, telephone (202) 426-2554.

SUPPLEMENTARY INFORMATION: On October 29, 1979, the Environmental Protection Agency proposed a regulation (44 FR 62204) to establish best available technology economically achievable (BAT) and best conventional pollutant control technology (BCT) limits for existing sources, new source performance standards (NSPS), and pretreatment standards for existing and new sources (PSES and PSNS) for the Textile Mills Point Source Category.

The regulation, as proposed, requires no revision; however, the Agency inadvertently included an early draft of Table V-9 in the supporting *Development Document for Proposed Effluent Limitations Guidelines and Standards for the Textile Mills Point Source Category* (EPA 440/1-79/022b). Based upon additional data, Table V-9 had been revised prior to publication of the proposed regulation. EPA used the revised table in developing the proposed regulation, not the earlier draft. EPA regrets any inconvenience or confusion this oversight may have caused, and presents the corrected table provided in this notice.

Solicitation of Comments:

EPA invites and encourages public participation in its rulemaking process. Comments should be specifically directed to any changes between the original and corrected versions of Table V-9. EPA is soliciting comments only on the correction presented here. Any comments no related to the specific data contained in Table V-9 will not be appropriate. The Agency is allowing 30 days from the publication of this notice for evaluation and presentation of comments. Therefore, comments should be submitted to James R. Berlow at the above address no later than September 5, 1980.

Dated: July 23, 1980.

Eckart C. Beck,

Assistant Administrator for Water and Waste Management.

Table V-9 (Correct).—*Typical BPT Effluent Concentrations—Conventional and Nonconventional Pollutants*

[Summary of historical and field sampling data]

Subcategory	DOD (mg/l)	COD (mg/l)	TSS (mg/l)	O&G (mg/l)	Phenol (µg/l)	Chromium (µg/l)	Sulfide (µg/l)	Color APHA units
1. Wool Scouring	120	2,600	1,200	190	100	40	360	1,900
2. Wool Finishing	50	240	50	#	80	200	(2,000)	(150)
3. Low Water Use Processing	25	220	30	#	60	60	90	#
4. Woven Fabric Finishing:								
a. Simple Processing	15	240	40	25	30	20	130	150
b. Complex Processing	25	250	50	(8)	70	30	60	(150)
c. Complex Processing Plus Desizing	25	250	50	9	50	30	1,100	150
5. Knit Fabric Finishing:								
a. Simple Processing	15	270	35	15	60	60	130	150
b. Complex Processing	20	280	55	30	60	25	55	150
c. Hosiery Products	70	570	100	#	80	30	55	150
6. Carpet Finishing	35	290	60	#	100	25	60	150
7. Stock and Yarn Finishing	10	140	25	(90)	60	40	120	150

Table V-9 (Correct).—Typical BPT Effluent Concentrations—Conventional and Nonconventional Pollutants—Continued

[Summary of historical and field sampling data]

Subcategory	DOD (mg/l)	COD (mg/l)	TSS (mg/l)	O&G (mg/l)	Phenol (µg/l)	Chromium (µg/l)	Sulfide (µg/l)	Color APHA units
8. Nonwoven Manufacturing	35	565	75	#	20	#	#	150
9. Felted Fabric Processing	35	305	95	#	80	#	#	150

Insufficient data to establish a typical value.
( ) Value is median of field sampling results.

[FR Doc. 80-23776 Filed 8-5-80; 8:45 am]

BILLING CODE 6560-01-M

INTERSTATE COMMERCE COMMISSION

49 CFR Part 1116

[Ex Parte No. 382]

Recordation of Documents

AGENCY: Interstate Commerce Commission.

ACTION: Notice of proposed rulemaking.

SUMMARY: We propose to modify certain administrative procedures by requiring a "notification of release" with the filing of any trust document or other instrument with the Secretary's Office for recordation, pursuant to 49 USC 11303. This provision will require the filing party to indicate when a document is filed, the period it should be retained by the Commission. At the end of the period, unless a continuation is requested, the Commission will dispose of the documents according to the retention schedule provided in this modified rule.

DATE: Comments on this proposed rulemaking are due on or before September 5, 1980.

ADDRESS: An original and 10 copies, if possible, should be sent to: Office of the Secretary, Interstate Commerce Commission, Washington, D.C. 20423.

FOR FURTHER INFORMATION CONTACT: James H. Bayne, 202-275-7646 or Joseph Ross, 202-275-0956.

SUPPLEMENTARY INFORMATION: The purpose of this rulemaking is to provide a reasonable limitation on the retention period for documents filed with the Commission under 49 USC 11303, as evidence of proprietary or leasehold interest in certain transportation property. These documents include mortgages, leases, equipment trust agreements, conditional sales agreements or other instruments evidencing the mortgage, lease, conditional sale or bailment of railroad cars, locomotives, or other rolling stock or vessels. Assignment of a right or interest under one to those instruments and an amendment to that instrument or assignment are also included.

Section 49 U.S.C. 11303 does not provide a specific retention period for such documents filed with the Commission. The statute only requires the Commission to maintain a system for recording each document and an index of those documents, which is open to the public.

Since the recordation provision was enacted in 1952, the Commission has maintained such documents at its Washington Headquarters' office. It is no longer possible to retain all such documents for an indefinite period of time. The Secretary of the Commission is custodian of such records and as filing officer, has the power to destroy those documents that have lapsed or are no longer effective instruments. The Office of the Secretary has determined that a total retention period of 30 years will be sufficient to deal with most documents filed under 49 U.S.C. 11303. Upon the recommendation of the Secretary, we plan to adopt the following amendments to 49 CFR 1116.5 which proposes that such documents having an initial retention period of 15 years be maintained at the Commission's Washington offices. Documents which are still effective after the initial retention period would be transferred to the Federal Records Center for an additional period of 15 years. Expired or lapsed documents would be destroyed after the initial 15 year retention period. Our proposed rule would also provide special provisions by which the filing party can request that individual documents be maintained longer than 30 years.

We also propose to adopt the following retention schedule for documents now on file with the Commission under 49 U.S.C. 11303. Recorded documents filed prior to June 1, 1965, will be transferred immediately to the Federal Records Center, with a proposed destruction date of July 1, 1995. Documents filed between July 1, 1965, and the effective date of this rule will be retained by the Commission until July 1, 1995. Such documents will be disposed of under the provisions of this rule. If after July 1, 1995, they are no longer effective, the documents will be destroyed. Documents which expire after July 1, 1995, will be transferred to the Federal Records Center for an additional retention period of 15 years. After the additional retention period, the documents will be destroyed, unless a continuance is requested by the parties that filed the documents.

The action proposed will not have an adverse effect on either the quality of the human environment or conservation of energy resources. However, anyone may comment on this aspect of the proposal.

Oral hearings do not appear to be necessary at this time and none is contemplated. Anyone wishing to present views and evidence, either in support of or in opposition to this proposal, is invited to submit written data, views, or arguments. Written materials submitted will be available for public inspection at the offices of the Interstate Commerce Commission, 12th and Constitution Avenue, N.W., Washington, D.C. during regular business hours.

This notice of proposed rules is issued under authority of 49 U.S.C. 11303 and 5 U.S.C. 553.

Decided: July 23, 1980.

By the Commission, Chairman Gaskins, Vice-Chairman Gresham, Commissioners Stafford, Clapp, Trantum, Alexis, and Gilliam. Commissioner Clapp absent and not participating.

Agatha L. Mergenovich,

Secretary.

Appendix

This rulemaking proposes amending Subchapter B, Part 1116 of Chapter 10 of Title 49 of the Code of Federal Regulations by adding to paragraph (a) of Part 1116.5 so that Part 1116.5(a) reads as follows:

(a)(1) The original and copies of the documents filed with the Commission under the provisions of 49 U.S.C. 11303 will be stamped with a consecutive recordation number and the date and hour of recordation. A notation will be added to show that the document has been filed under the provision of 49 U.S.C. 11303. The original will be returned and the copies or counterpart retained by the Commission.

(2) The Secretary will accept a document for filing under these regulations only if the filing parties include a notification of release which states the period of time that such document must be retained by the Commission. This notification must specify the expiration date of the document. If the expiration date of the document or the requested retention period exceeds 30 years, the filing party must also submit a request for continuation which will inform the Commission of the need to retain the document beyond the 30-year retention period established by these regulations.

(3) Documents filed under these regulations which have an expiration date of 15 years or less will be retained in the Office of the Secretary for 60 days after the expiration of the initial 15 year retention period. At the end of the 60-day period, unless the filing party

requests a continuation of the retention period, the documents will be destroyed.

(4) Documents with expiration dates of more than 15 years will be retained in the Office of the Secretary for an initial retention period of 15 years. Sixty days after the expiration of the initial 15-year period, the documents will be transferred to the Federal Records Center for an additional 15 years. Sixty days after the end of the second 15-year period, the documents will be destroyed unless the filing party requests a continuation of the retention period.

(5) A continuation request may also be made by the filing party between 180 days before and 60 days after the expiration of the retention period. Any such continuation request must be signed by the filing party. It must identify the recordation number of the original document, and state that the original document is still effective. Upon timely filing and acceptance of the continuation request, the retention period of the document will be extended for 5 years from the expiration date of the last retention period. Succeeding continuation requests may be made in the same manner to extend the retention period.

[FR Doc. 80-23777 Filed 8-5-80; 8:45 am]
BILLING CODE 7035-01-M

Notices

Federal Register
Vol. 45, No. 153
Wednesday, August 6, 1980

This section of the FEDERAL REGISTER contains documents other than rules or proposed rules that are applicable to the public. Notices of hearings and investigations, committee meetings, agency decisions and rulings, delegations of authority, filing of petitions and applications and agency statements of organization and functions are examples of documents appearing in this section.

FEDERAL COUNCIL ON THE AGING

Meeting

The Federal Council on the Aging was established by the 1973 Amendments to the Older Americans Act of 1965 (Pub. L. 93-29, 42 U.S.C. 3015) for the purpose of advising the President, the Secretary of Health and Human Services, the Commissioner on Aging and the Congress on matters relating to the special needs of older Americans.

Notice is hereby given pursuant to the Federal Advisory Committee Act (Pub. L. 92-463, 5 U.S.C. App. 1, Sec. 10, 1976) that the Council will hold a meeting on August 25, 1980 from 9:00 a.m. to 5:00 p.m. and August 26, 1980 from 9:00 a.m. to 12:30 p.m. in Rooms 403A Hubert Humphrey Building, 200 Independence Avenue, S.W. Washington, D.C. 20201.

The agenda will consist of a discussion on the pros and cons of major issues emanating from the Council's Congressionally-Mandated Study and strategies for effectively "bounding" these issues. Status reports on committee activity will be presented. Also, special guests including Mr. Morton Leeds of the Department of Housing and Urban Development will make presentations.

Finally, non-mandated aging concerns/issues which will highlight Council work in FY' 81 are to be discussed.

Further information on the Council may be obtained from the Federal Council on the Aging, Washington, D.C. 20201, telephone (202) 245-0441.

FCA meetings are open for public observation.

Dated: July 31, 1980.

Charles J. Fahey,
Chairman, Federal Council on the Aging.

[FR Doc. 80-23653 Filed 8-5-80; 8:45 am]
BILLING CODE 4110-92-M

DEPARTMENT OF AGRICULTURE

Forest Service

Spruce Creek Wilderness Study Area; White River National Forest Pitkin County, Colo.; Public Hearing

Notice is hereby given that a public hearing will be held during the hours of 2:00 to 5:00 p.m. and 7:00 to 10:00 p.m., September 9, 1980, at the Holiday Inn, Glenwood Springs, Colorado, on a proposal for the future management of the Spruce Creek Study Area contiguous to the Hunter Creek-Fryingpan Wilderness. The Area contains approximately 8,000 acres within the White River National Forest in the county of Pitkin in the State of Colorado.

A copy of the Draft Environmental Impact Statement may be obtained from the Forest Supervisor, White River National Forest, P.O. Box 948, Glenwood Springs, Colorado 81601.

Individuals and organizations may express their views by appearing at this hearing or may submit written comments for inclusion in the official record to the Regional Forester, Rocky Mountain Region, P.O. Box 25127, Lakewood, Colorado 80225. Those persons wishing to present oral testimony at the hearing should notify the Regional Forester at the above address, prior to September 2, 1980. To be included in the official record, written comments must be received by October 9, 1980.

R. Max Peterson,
Chief, Forest Service.
July 31, 1980.
[FR Doc. 80-23650 Filed 8-5-80; 8:45 am]
BILLING CODE 3410-11-M

Soil Conservation Service

Environmental Impact Finding; Buggy Creek Critical Area Treatment RC&D Measure, Oklahoma

AGENCY: Soil Conservation Service, U.S. Department of Agriculture.

ACTION: Notice of a finding of no significant impact.

FOR FURTHER INFORMATION CONTACT: Mr. Roland R. Willis, State Conservationist, Soil Conservation Service, Agricultural Center Office Building, Farm Road & Brumley Street, Stillwater, Oklahoma 74074, telephone 405-624-4460.

Notice

Pursuant to Section 102(2)(C) of the National Environmental Policy Act of 1969; the Council on Environmental Quality Guidelines (40 CFR Part 1500); and the Soil Conservation Service Guidelines (7 CFR Part 650); the Soil Conservation Service, U.S. Department of Agriculture, gives notice that an environmental impact statement is not being prepared for the Buggy Creek Critical Area Treatment RC&D Measure, Caddo County, Oklahoma.

The environmental assessment of this federally assisted action indicates that the project will not cause significant local, regional, or national impacts on the environment. As a result of these findings, Mr. Roland R. Willis, State Conservationist, has determined that the preparation and review of an environmental impact statement are not needed for this project.

The measure concerns a plan for a critical area treatment plan for erosion control. The planned works of improvement include gully shaping, waterways, vegetative protection, erosion control dams, a diversion, concrete channel liners, critical area plantings, and fencing.

The Notice of a Finding of No Significant Impact (FNSI) has been forwarded to the Environmental Protection Agency. The basic data developed during the environmental assessment are on file and may be reviewed by contacting Mr. Roland R. Willis, State Conservationist, Soil Conservation Service, Agricultural Center Office Building, Farm Road & Brumley Street, Stillwater, Oklahoma 74074, telephone 405-624-4460. The FNSI has been sent to various Federal, State, and local agencies and interested parties. A limited number of copies of the FNSI are available to fill single copy requests at the above address.

Implementation of the proposal will not be initiated until September 5, 1980.

(Catalog of Federal Domestic Assistance Program No. 10.901, Resource Conservation and Development Program—Public Law 87-703, 16 U.S.C. 590a-f, q)

James W. Mitchell,
Associate Deputy Chief for Natural Resource Projects.
July 25, 1980.

[FR Doc. 80-23620 Filed 8-5-80; 8:45 m]
BILLING CODE 3410-16-M

Environmental Impact Finding; Upper Howard's Creek Watershed, Kentucky

AGENCY: Soil Conservation Service, U.S. Department of Agriculture.

ACTION: Notice of finding of no significant impact.

FOR FURTHER INFORMATION CONTACT: Mr. Glen E. Murray, State Conservationist, Soil Conservation Service, 333 Waller Avenue, Lexington, Kentucky 40504, telephone (606) 233-2749.

Notice

Pursuant to Section 102(2)(C) of the National Environmental Policy Act of 1969; the Council on Environmental Quality Guidelines (40 CFR Part 1500); and the Soil Conservation Service Guidelines (7 CFR Part 650); the Soil Conservation Service, U.S. Department of Agriculture, gives notice that an environmental impact statement is not being prepared for the deauthorization of Federal funding of the Upper Howard's Creek Watershed, Clark County, Kentucky.

The environmental assessment of this action indicates that deauthorization of Federal funding of the project will not cause significant local, regional, or national impacts on the environment. As a result of these findings, Mr. Glen E. Murray, State Conservationist, has determined that the preparation and review of an environmental impact statement are not needed for this action.

The Notice of Finding of No Significant Impact (FNSI) has been forwarded to the Environmental Protection Agency. The basic data developed during the environmental assessment are on file and may be reviewed by contacting Mr. Glen E. Murray. The FNSI has been sent to various Federal, State, and local agencies and interested parties. A limited number of copies of the FNSI are available to fill single copy requests at the above address.

No administrative action on implementation of the proposal will be taken until October 6, 1980.

(Catalog of Federal Domestic Assistance Program No. 10.904, Watershed Protection and Flood Prevention Program, Public Law 83-566, 16 U.S.C. 1001-1008)

Dated: July 22, 1980.

James W. Mitchell,

Associate Deputy Chief for Natural Resource Projects.

[FR Doc. 80-23621 Filed 8-5-80; 8:45 am]

BILLING CODE 3410-16-M

CIVIL AERONAUTICS BOARD

[Docket No. 36508]

Essential Air Service at El Dorado/Camden, Ark.; Oral Argument

Notice is hereby given, pursuant to the provisions of the Federal Aviation Act of 1958, as amended, that oral argument in this proceeding is assigned to be held before the Board on August 20, 1980, at 10:00 a.m. (local time), in Room 1027, Universal Building, 1825 Connecticut Avenue, N.W., Washington, D.C.

Each party that wishes to participate in the oral argument shall so advise the Secretary, in writing, on or before August 11, 1980, together with the name of the person who will represent it at the argument. Legal counsel is not required.

To assist the parties in making their presentations to the Board, copies of the rate-of-compensation agreement between each carrier and the Bureau of Domestic Aviation will be distributed to all parties in this case prior to the oral argument.

A notice setting forth the procedures to be followed at the oral argument will be issued after August 11, 1980.

Dated at Washington, D.C., August 1, 1980.

Phyllis T. Kaylor,

Secretary.

[FR Doc. 80-23683 Filed 8-5-80; 8:45 am]

BILLING CODE 6320-01-M

DEPARTMENT OF COMMERCE

Foreign-Trade Zones Board

[Docket No. 12-77]

Application for Expansion of Foreign-Trade Zone No. 8, Toledo, Ohio; Withdrawal Approved

Notice is hereby given that the Toledo-Lucas County Port Authority, Grantee of Foreign-Trade Zone No. 8, Toledo, has requested the withdrawal without prejudice of its application to expand its zone, filed with the Foreign-Trade Zones Board on October 20, 1977 (Docket No. 12-77). The proposal was opposed by the domestic steel industry because the main purpose of the expansion was to handle foreign steel.

The withdrawal has been approved by the Board's executive secretary and the proposal is considered closed.

Dated: July 31, 1980.

John J. Da Ponte, Jr.,

Executive Secretary, Foreign-Trade Zones Board.

[FR Doc. 80-23675 Filed 8-5-80; 8:45 am]

BILLING CODE 3510-25-M

Foreign-Trade Zone Board

[Order No. 161]

Resolution and Order Approving Application of the Port of Portland, Oreg. for a Foreign-Trade Subzone in Portland; Proceedings of the Foreign-Trade Zones Board, Washington, D.C.

Resolution and order

Pursuant to the authority granted in the Foreign-Trade Zones Act of June 18, 1934, as amended (19 U.S.C. 81a-18u), the Foreign-Trade Zones Board has adopted the following Resolution and Order:

The Board, having considered the matter, hereby orders:

After consideration of the application of the Port of Portland, Oregon, Grantee of Foreign-Trade Zone No. 45, filed with the Foreign-Trade Zones Board (the Board) on May 30, 1979, as amended on February 29, 1980, requesting authority to establish a special-purpose subzone at the Beall Pipe and Tank Corporation facility, located at 12005 North Burgard Road in Portland, within the Columbia River Customs port of entry, for the purpose of storing imported steel coil and for the manufacture of electric resistance and spiral welded steel pipe for export, the Board, finding that the requirements of the Foreign-Trade Zones Act, as amended, and the Board's regulations are satisfied, and that the proposal is in the public interest, approves the application.

The Grantee shall notify the Board's Executive Secretary for approval prior to he commencement of any additional manufacturing operations at the subzone site. The Secretary of Commerce, as Chairman and Executive Officer of the Board, is hereby authorized to issue a grant of authority and appropriate Board Order.

Grant To Establish, Operate, and Maintain a Foreign-Trade Subzone at Portland, Oreg.

Whereas, by an Act of Congress approved June 18, 1934, an Act "To provide for the establishment, operation, and maintenance of foreign-trade zones in ports of entry of the United States, to expedite and encourage foreign commerce, and for other purposes," as amended (19 U.S.C. 81a-81u) (the Act), the Foreign-Trade Zones Board (the Board) is authorized and empowered to grant to corporations the privilege of establishing, operating, and maintaining foreign-trade zones in or adjacent to ports of entry under the jurisdiction of the United States;

Whereas, the Board's regulations provide (15 CFR 400.304) that the establishment of a foreign-trade subzone in an area separate from an existing zone, for one or more of the specialized purposes of storing, manipulating, manufacturing, or exhibiting goods may be authorized if the Board finds that existing or authorized zones will not serve adequately

the convenience of commerce with respect to the proposed purposes;

Whereas, the Port of Portland, Oregon, Grantee of Foreign-Trade Zone No. 45 (the Grantee), has made application (filed May 30, 1979, amended February 29, 1980) in due and proper form to the Board for the establishment, operation, and maintenance of a foreign-trade subzone at the Beall Pipe and Tank Corporation facility, located at 12005 North Burgard Road in Portland, Oregon, for the purposes of storing imported steel coil, and for the manufacture of electric resistance and spiral welded steel pipe for export only;

Whereas, notice of said application has been given and published, and full opportunity has been afforded all interested parties to be heard;

Whereas, the Board has found that the proposed location of the foreign-trade subzone in Portland is suitable, and the facilities provided are sufficient; and

Whereas, the Board has found that the requirements of the Foreign-Trade Zones Act, as amended, and the Board's regulations are satisfied, and that the proposal is in the public interest;

Now, Therefore, the Board hereby grants to the Grantee the privilege of establishing, operating, and maintaining a foreign-trade subzone for the above purposes, designated on the records of the Board as Foreign-Trade Subzone No. 45A, at the location mentioned above and more particularly described on the maps and drawings accompanying the application, said grant being subject to the provisions, conditions, and restrictions of the Act and the Regulations issued thereunder, to the same extent as though the same were fully set forth herein, and also to the following express conditions and limitations:

Operation of the foreign-trade subzone shall be commenced by the Grantee within a reasonable time from the date of issuance of the grant, and prior thereto, the Grantee shall obtain all necessary permits from Federal, State, and municipal authorities.

The Grantee shall allow officers and employees of the United States free and unrestricted access to and throughout the foreign-trade subzone in the performance of their official duties.

The Grantee shall notify the Executive Secretary of the Board for approval prior to the commencement of any manufacturing operation within the subzone other than that of electric resistance and spiral welded steel pipe for export.

The grant shall not be construed to relieve the Grantee or operator from liability for injury or damage to the person or property of others occasioned by the construction, operation, or maintenance of said subzone, and in no event shall the United States be liable therefor.

The grant is further subject to settlement locally by the District Director of Customs and District Army Engineer with the Grantee regarding compliance with their respective requirements for the protection of the revenue of the United States and the installation of suitable facilities.

In Witness Whereof, the Foreign-Trade Zones Board has caused its name to be signed and its seal to be affixed hereto by its Chairman and Executive Officer at Washington, D.C., this 31st day of July 1980, pursuant to Order of the Board.

Foreign-Trade Zones Board.

Philip W. Klutznick,

Chairman and Executive Officer.

Attest.

John J. Da Ponte, Jr.,

Executive Secretary.

[FR Doc. 80-23693 Filed 8-5-80; 8:45 am]

BILLING CODE 3510-25-M

DEPARTMENT OF COMMERCE

National Technical Information Service

Government-Owned Inventions; Availability for Licensing

The inventions listed below are owned by the U.S. Government and are available for domestic and, possibly, foreign licensing in accordance with the licensing policies of the agency-sponsors.

Copies of patents cited are available from the Commissioner of Patents & Trademarks, Washington, DC 20231, for $.50 each. Requests for copies of patents must include the patent number.

Copies of patent applications cited are available from the National Technical Information Service (NTIS), Springfield, Virginia 22161 for $5.00 each ($10.00 outside North American Continent). Requests for copies of patent applications must include the PAT-APPL number. Claims are deleted from patent application copies sold to avoid premature disclosure. Claims and other technical data will usually be made available to serious prospective licensees upon execution of a non-disclosure agreement.

Requests for information on the licensing of particular inventions should be directed to the addresses cited for the agency-sponsors.

Douglas J. Campion,

Program Coordinator, Office of Government Inventions and Patents, National Technical Information Service, Department of Commerce.

Chief, Intellectual Prop. Division, OTJAG, Department of the Army, Room 2D 444, Pentagon, Washington, DC 20310

Patent application 6-059,937: Clutch Employing Constant Force Springs. Filed July 23, 1979.

Patent application 6-066,949: Disposable Contolled Atmosphere System for Extending the Shipping and Storage Life of Lettuce. Filed August 16, 1979.

Patent application 6-082,378: Novel Process for Preparing O'O'Diethyl Methylphosphonite. Filed October 5, 1979.

Patent application 6-086,504: Acceleration Resistant Crystal Combination. Filed October 19, 1979.

Patent application 6-087,116: New Supports and Preparation Process for the Manufacture of a Calcium Chemical Pump for HF/DF Laser. Filed October 22, 1979.

Patent application 6-087,117: Improved High Energy Laser Beam Sampling Meter. Filed October 22, 1979.

Patent application 6-088,906: Triggered High Current Opening Switch. Filed October 29, 1979.

Patent application 6-089,832: Improved Pyrotechnic Fuel. Filed October 31, 1979.

Patent application 6-101,344: Fluidic Wetted Slip Range. Filed December 7, 1979.

Patent application 6-101,927: Circuit for Test of Ultra High Speed Digital Arithmetic Units. Field December 10, 1979.

Patent application 6-105,639: Individual Lead Pull Test for Beam Leaded Devices. Filed December 20, 1979.

Patent application 6-106,983: Method and Apparatus for Non-Destructive Testing of Beam-Lead Integrated Circuit Connections. Filed December 26, 1979.

Patent application 6-109,379: Holographic Plate Exposure Meter. Filed January 3, 1980.

Patent application 6-114,547: Interference Canceling System. Filed January 23, 1980.

U.S. Department of the Air Force, AF/JACP, 1900 Half Street, S.W., Washington, DC 20324

Patent application 6-070,384: Hydraulic Seal Battery Terminal. Filed August 28, 1979.

Patent application 6-121,076: Low Profile Precision Actuator. Filed February 13, 1980.

Patent application 6-128,343: Loss-Free Scanning Antenna. Filed March 7, 1980.

Patent application 6-128,344: Method and Apparatus for Detecting Small Angular Beam Deviations. Field March 7, 1980.

Patent application 6-129,437: Solvent Mixture for Removing Polyurethane Coatings. Filed March 11, 1980.

Patent application 6-132,452: Large Dynamic Range Low Distortion Amplitude Modulation Detector Apparatus. Filed March 21, 1980.

Patent application 6-132,453: Low Temperature Braze Alloy.

Patent application 6,133,767: Aircraft Self-Sealing Fuel Tank and Method of Fabricating; filed Mar. 25, 1980.

Patent application 6,133,769: All-Flexure Linear Isolation/Suspension System; filed Mar. 25, 1980.

Patent application 6,134,597: Beam Alignment System; filed Mar. 27, 1980.

Patent 4,198,877: Control Cable Fail Safe Device; filed July 7, 1978; patented Apr. 22, 1980; not available NTIS.

Patent 4,198,990: Mouth Mounted Accelerometer Pack; filed Mar. 5, 1979; patented Apr. 22, 1980; not available NTIS.

Patent 4,199,175: Ribbed Flange Modified Seal; filed Apr. 28, 1978; patented Apr. 22, 1980; not available NTIS.

Patent 4,199,223: Portable Optical Fiber Coupling Device; filed Mar. 30, 1978; patented Apr. 22, 1980; not available NTIS.

Patent 4,200,875: Apparatus for, and Method of, Recording and Viewing Laser-made Images on High Gain Retroreflective Sheeting; filed July 31, 1978; patented Apr. 29, 1980; not available NTIS.

U.S. Department of Agriculture, Program Agreements and Patent Branch, Administrative Service Division, Federal Building, Science and Education Administration, Hyattsville, MD 20782

Patent application 6,132,582: Protein Concentrate from High-Protein Pearl Millet; filed Mar. 31, 1980.

U.S. Department of Energy, Assistant General Counsel for Patents, Washington, DC 20545

Patent application 6,005,263: Improved Gas Mixtures for Gas-Filled Particle Detectors; filed Jan. 22, 1979.
Patent application 6,027,439: Method of Preparing High-Temperature-Stable Thin-Film Resistors; filed Apr. 5, 1979.
Patent application 6,030,806: Electromechanical Solar Tracking Apparatus; filed Apr. 17, 1979.
Patent application 967,748: Method of Freezing Living Cells and Tissues with Improved Subsequent Survival; filed Dec. 8, 1978.
Patent application 4,152,248: Hydrogenation of Coal Liquid Utilizing a Metal Carbonyl Catalyst; filed May 2, 1978; patented May 1, 1979; not available NTIS.

U.S. Department of Interior, Branch of Patents, 18th and C Streets NW., Washington, DC 20240

Patent application 903,430: Spray Immunization of Fish; filed May 8, 1978.

U.S. Department of the Navy, Assistant Chief for Patents, Office of Naval Research, Code 302, Arlington, VA 22217

Patent application 6,041,037: Diver's Suit Excess Gas Exhaust Valve; filed May 21, 1979.
Patent application 6,094,269: Array Shading for a Broadband Constant-Directivity Transducer; filed Nov. 14, 1979.
Patent application 6,095,112: Ferrofluid Transducer; filed Nov. 16, 1979.
Patent application 6,095,868: Optical Amplification for the Fiber Interferometer Gyro; filed Nov. 19, 1979.
Patent application 6,101,362: Piezoceramic Tubular Element with Zero End Displacement; filed Dec. 7, 1979.
Patent application 6,115,643: Linear Acoustic Array; filed Jan. 28, 1980.
Patent application 6,116,173: Integrated Bias for Waveguide Amplitude Modulator; filed Jan. 28, 1980.
Patent application 6,121,625: Dark Field Surface Inspection Illumination Technique; filed Feb. 14, 1980.
Patent application 6,122,388: Cooling Apparatus for Electronic Modules; filed Feb. 19, 1980.
Patent application 6,123,339: Phase-Conjugate Interferometer; filed Feb. 21, 1980.
Patent application 6,126,088: Semiconductor Encapsulant for Annealing Ion-Implanted GaAs; filed Feb. 29, 1980.
Patent application 6,126,268: Application on Ion Implantation to $LiNbO_3$ Integrated, Optical Spectrum Analyzers; filed Mar. 3, 1980.
Patent application 6,126,589: Towed Array Condition Appraisal System; filed Mar. 3, 1980.
Patent application 6,127,020: Automatic Actuator for Variable Speed Pump; filed Mar. 4, 1980.
Patent application 6,129,300: Waveguide Coupler; filed Mar. 11, 1980.
Patent application 6,129,792: Wide-Band Varactor—Tuned Gunn Oscillator; filed Mar. 12, 1980.
Patent application 6,131,349: Resonantly Pumped Mid-IR Laser; filed Mar. 19, 1980.

National Aeronautics and Space Administration, Assistant General Counsel for Patent Matters, NASA Code GP-2, Washington, DC 20546

Patent application 6,126,063: Thermal Reactor and Process; filed Feb. 29, 1980.
Patent application 6,129,783: Improved Sun-Sensing, Guidance System for High-Altitude Aircraft; filed Mar. 12, 1980.
Patent 4,189,234: Noncontacting Method for Measuring Angular Deflection; filed Oct. 23, 1978; patented Feb. 19, 1980; not available NTIS.
Patent 4,192,290: Combined Solar Collector and Energy Storage System; filed Apr. 28, 1978; patented Mar. 11, 1980; not available NTIS.
Patent 4,192,910: Catalyst Surfaces for the Chromous/Chromic Redox Couple; filed Nov. 29, 1978; patented Mar. 11, 1980; not available NTIS.
Patent 4,192,994: Diffractoid Grating, Configuration for X-Ray and Ultraviolet Focusing; filed Sept. 18, 1978; patented Mar. 11, 1980; not available NTIS.
Patent 4,193,827: Atomic Hydrogen Storage; filed Sept. 29, 1977; patented Mar. 18, 1980; not available NTIS.

[FR Doc. 80-23615 Filed 8-5-80; 8:45 am]
BILLING CODE 3510-04-M

Government-Owned Inventions; Availability for Licensing

The inventions listed below are owned by the U.S. Government and are available for domestic and, possibly, foreign licensing in accordance with the licensing policies of the agency-sponsors.

Copies of patents cited are available from the Commissioner of Patents & Trademarks, Washington, DC 20231, for $0.50 each. Requests for copies of patents must include the patent number.

Copies of patent applications cited are available from the National Technical Information Service (NTIS), Springfield, Virginia 22161 for $5.00 each ($10.00 outside North American Continent). Requests for copies of patent applications must include the PAT-APPL number. Claims are deleted from patent application copies sold to avoid premature disclosure. Claims and other technical data will usually be made available to serious prospective licensees upon execution of a non-disclosure agreement.

Requests for information on the licensing of particular inventions should be directed to the addresses cited for the agency-sponsors.

Douglas J. Campion,

Program Coordinator, Office of Government Inventions and Patents, National Technical Information Service, Department of Commerce.

Chief, Intellectual Prop. Division, OTJAG, Department of the Army, Room 2D 444, Pentagon, Washington, DC 20310

Patent application 6,077,862: Cargo Container Transporter. Filed September 21, 1979.
Patent application 6,078,892: Multipurpose Humidity Controlled Agent Generator. Filed October 24, 1979.
Patent application 6,091-227: Engine Simulator to Calibrate RPM and Cam-Dwell Test Sets. Filed November 5, 1979.
Patent application 6,099,262: Doppler Extended Depth of Field Imaging System with Coherent Object Illumination. Filed December 3, 1979.
Patent application 6,114,916: Laser Scanner Transport. Filed January 24, 1980.
Patent application 6,115,819: Kinetic Sabot System. Filed January 28, 1980.
Patent application 6,115,820: Propellant Charge for Blank Ammunition. Filed January 28, 1980.
Patent 4,137,757: Compression Testing Apparatus. Filed February 2, 1978, patented February 6, 1979. Not available NTIS.
Patent 4,158,503: Heterodyne Optical Correlator. Filed September 30, 1977, patented June 19, 1979. Not available NTIS.
Patent 4,162,509: Non-Contact Velocimeter Using Arrays. Filed June 21, 1978, patented July 24, 1979. Not available NTIS.
Patent 4,181,851: Automatic Astroposition Determination Apparatus. Filed February 24, 1978, patented January 1, 1980. Not available NTIS.

U.S. Department of the Air Force, AF/JACP, 1900 Half Street, S.W. Washington, DC 20324

Patent application 6,118,006: High Energy Solid Propellant Composition. Filed February 4, 1980.
Patent application 6,118,384: Modular Multilayer Detector. Filed February 5, 1980.
Patent application 6,126,072: Mask-Slice Alignment Method. Filed February 29, 1980.
Patent application 6,126,073: Physical Deterrent Barrier with Upward Looking Detection Sensor for Intruder Detection System. Filed February 29, 1980.
Patent application 6,126,272: Survivable Satellite Bus Structural Frame. Filed March 3, 1980.
Patent application 6,127,017: Method of Making Integrated Waveguide Cavities. Filed March 4, 1980.
Patent application 6,129,858: Biaxial Shear Force Gauge. Filed March 13, 1980.
Patent application 6,132,454: Device for Generating Simulated Waveforms for an Electronic System Maintenance Trainer. Filed March 21, 1980.
Patent application 6,133,769: All-Flexure Linear Isolation/Suspension System. Filed March 25, 1980.
Patent application 6,134,718: Method and Apparatus for Augmenting Binary Patterns. Filed March 27, 1980.

Patent 4,196,435: Radar Pulse Phase Code System. Filed August 21, 1967, patented April 1, 1980. Not available NTIS.
Patent 4,199,079: Microsphere Loading Device. Filed July 31, 1978, patented April 22, 1980. Not available NTIS.
Patent 4,199,175: Ribbed Flange Modified Seal. Filed April 28, 1978, patented April 22, 1980. Not available NTIS.
Patent 4,199,759: System for Correlating Electronic Distance Measurement and Aerial Photography for the Extension of Geodetic Control. Filed August 10, 1978, patented April 22, 1980. Not available NTIS.
Patent 4,200,840: Dual Detection Scheme for Compressive Receivers. Filed October 6, 1978, patented April 29, 1980. Not available NTIS.
Patent 4,200,872: Doppler Compensated Digital Non-Linear Waveform Generator Apparatus. Filed December 13, 1978, patented April 29, 1980. Not available NTIS.

U.S. Department of Energy, Assist. Gen. Couns. for Patents, Washington, DC 20545

Patent application 6,003,558: Side-Welded Fast Response Sheathed Thermocouple. Filed January 15, 1979.
Patent application 6,021,291: Improved Magnetic Encoding Device and Method for Making the Same. Filed March 16, 1979.
Patent application 6,022,896: Cure-in-Place Process for Seals. Filed March 22, 1979.
Patent application 6,029-964: Radiation Detection System. Filed April 13, 1979.
Patent application 6,039,426: Scram Signal Generator. Filed May 15, 1979.
Patent application 957,632: Apparatus for Measuring Resistance Change Only in a Cell Analyzer and Method for Calibrating It. Filed November 3, 1978.
Patent application 966,524: LiCl Dehumidifier/LiBr Absorption Chiller Hybrid Air Conditioning System with Energy Recovery. Filed December 4, 1979.

U.S. Department of Health and Human Services, National Institutes of Health, Chief, Patent Branch, Westwood Building, Bethesda, MD 20205

Patent application 6,118,969: Instrument for Measuring True—RMS AC Voltage and AC Voltage Fluctuations. Filed February 5, 1980.

U.S. Department of the Navy Assistant Chief for Patents, Office of Naval Research, Code 302, Arlington, Va 22217

Patent application 6-094,250: Rare Earth-Iron Magnetostrictive Materials and Devices Using These Materials; filed Nov. 14, 1979.
Patent application 6-096,708: Buoy Anchoring System; filed Nov. 21, 1979.
Patent application 6-098,276: Offset-Pad Bearing; filed Nov. 28, 1979.
Patent application 6-101,965: Flexible Linear Thermal Array; filed Dec. 10, 1979.
Patent application 6-107,236: Boost Assisted Missile Launcher; filed Dec. 26, 1979.
Patent application 6-115,860: Multirate Digital Voice Communication Processor; filed Jan. 28, 1980.
Patent application 6-123,338: Clutter Filter Using a Minimum Number of Radar Pulses; filed Feb. 21, 1980.
Patent application 6-125,005: Single Stage Twin Piston Cryogenic Refrigerator; filed Feb. 27, 1980.
Patent application 6-126,772: Underwater-Mateable Electrical Connector; filed Mar. 3, 1980.
Patent application 6-126,778: High Torque/Acceleration Stablized Sensor Platform; filed Mar. 3, 1980.
Patent application 6-127,707: Direct Reading Capacitance Meter; filed Mar. 6, 1980.
Patent application 6-128,326: Method of Modifying the Transition Temperature Range of TINI Base Shape Memory Alloys; filed Mar. 7, 1980.
Patent application 6-133,238: Position Interlock System for Submarine Masts and Closure; filed Mar. 24, 1980.
Patent application 6-134,717: Tokamak Plasma Heating with Intense, Pulsed Ion Beams; filed Mar. 27, 1980.

National Aeronautics & Space Administration, Assistance General Counsels for Patent Matters NASA Code GP-2, Washington, DC 20546

Patent application 6-126,064: Apparatus for Damping Operator Induced Oscillations of a Controlled System; filed Feb. 29, 1980.
Patent application 6-128,229: Inorganic Spark Chamber Frame and Method of Making the Same; filed Mar. 7, 1980.
Patent application 6-129,779: Memory-Based Frame Synchronizer 1980.
Patent application 6-129,783: Improved Sun-Sensing Guidance System for High-Attitude Aircraft; filed Mar. 12, 1980.
Patent Application 6-130,496: Method and Apparatus for Convection Control of Metallic Halide Vapor Density in a Metallic Halide Laser; filed Mar. 14, 1980.
Patent Application 957,452: Method and Apparatus for Doppler Frequency Modulation of Radiation; filed Nov. 3, 1980.
Patent Application 4,188,823: Detection of the Transition Layer Between Laminar and Turbulent Flow Areas on a Wing Surface; filed Nov. 27, 1979, patented Feb. 19, 1980; not available NTIS.
Patent Application 4,189,675: Satellite Personal Communications System; filed. May 30, 1980, patented Feb. 19, 1980; not available NTIS.
Patent Application 4,193,388: Portable Heatable Container; filed Apr. 19, patented Mar. 18, 1980; not available NTIS.
Patent Application 4,193,693: Velocity Servo for Continuous Scan Fourier Interference Spectrometer; filed Feb. 24, 1978, patented Mar. 18, 1980; not available NTIS.
Patent application 4,195,279: Attaching of Strain Gages to Substrates; filed Feb. 16, 1978, patented Mar. 25, 1980; not available NTIS.

[FR Doc. 80-23614 Filed 8-5-80; 8:45 am]
BILLING CODE 3510-04-M

COMMODITY FUTURES TRADING COMMISSION

Proposed Futures Contract; Availability

The Commodity Futures Trading Commission ("Commission") is making available and requesting public comment on a rough rice futures contract proposed to be traded by the New Orleans Commodity Exchange. The New Orleans Commodity Exchange has not yet been designated as a contract market by the Commission. Copies of this proposed contract will be available at the Commission's offices in Washington, New York, Chicago, Minneapolis, Kansas City, and San Francisco. The Commission will also furnish copies upon request made to the Commission Secretary.

Any person interested in expressing views on the terms and conditions of this proposed contract should send comments by September 5, 1980 to Ms. Jane Stuckey, Secretary, Commodity Futures Trading Commission, 2033 K Street NW., Washington, D.C., 20581. (202) 254-6314. Copies of all comments will be available for inspection at the Commission's Washington office.

Issued in Washington, D.C., on July 31, 1980.

Jane K. Stuckey,
Secretary of the Commission.

[FR Doc. 80-23582 Filed 8-5-80; 8:45 am]
BILLING CODE 6351-01-M

DEPARTMENT OF DEFENSE

Corps of Engineers, Department of the Army

Intent To Prepare a Draft Environmental Impact Statement (DEIS) for the Proposed Reallocation of Flood Control Storage to Water Supply Storage in the Cowanesque Reservoir, Tioga County, Pa.

AGENCY: Baltimore District, U.S. Army Corps of Engineers, DOD.

ACTION: Notice of intent to prepare a draft environmental impact statement (DEIS).

SUMMARY: 1. The Baltimore District is currently studying the possiblity of reallocating flood control storage to water supply storage in the Cowanesque Reservoir. The Cowanesque Reservoir is an existing Corps of Engineers flood control project on the Cowanesque River in north central Pennsylvania. The existing project has been designed for flood control and recreation purposes with a 410 acre summer pool at elevation 1045 msl. The reallocation study is examining the potential of permanently storing additional water in the reservoir to provide for consumptive use downstream in the Susquehanna River Basin during periods of drought.

2. Alternatives under examination consist of three increased storage levels

between 1045 feet msl and 1085 feet msl as well as the course of not providing water supply storage in the existing Federal project.

3. The study was initiated in June 1979 and a Stage I Report was circulated for review in February 1980. A public meeting was held on June 30, 1980. The responses to the Stage I report and the public meeting have been used to scope the significant issues. All parties that have not been previously notified and have an interest in the study and development of a DEIS are invited to participate by contacting the Baltimore District, Corps of Engineers.

Many comments were received on the report and at the public meeting. Issues that have been identified are the effects on flood control of impounding additional water, the inundation of the existing recreation facilities and replacement of facilities at higher pool levels, the effects of water supply drawdowns on recreation during late summer and fall, the effects of higher pool levels on terrestrial and aquatic habitat, and the effects of releasing additional water during droughts on the downstream fishery. Additional coordination with Federal, State, and local officials is anticipated prior to preparation of the DEIS. Additional public meetings and workshops will also be held.

4. A separate scoping meeting is not anticipated, and the additional workshops will be used to ascertain and elaborate upon the list of significant issues. If sufficient interest develops, a scoping meeting will be held.

5. The estimated date that the DEIS will be available to the public is October 1981.

6. Questions concerning the proposed action and DEIS can be directed to Mr. J. William Haines, Study Manager, Urban Studies Branch, Planning Division, U.S. Army Engineer District, Baltimore, P.O. Box 1715, Baltimore, Maryland 21203.

Dated: July 21, 1980.

James W. Peck,

Colonel, Corps of Engineers, District Engineer.

[FR Doc. 80-23617 Filed 8-5-80; 8:45 am]

BILLING CODE 3710-01-M

Corps of Engineers; Department of the Army

Intent To Prepare a Draft Environmental Impact Statement (DEIS) for Central and South Florida Canal 18, Jupiter Inlet, and Loxahatchee River Study

AGENCY: U.S. Army Corps of Engineers, DOD.

ACTION: Notice of intent to prepare a draft environmental impact statement (DEIS).

LSUMMARY: 1. The study was authorized by resolutions adopted June 6, 1958 and December 19, 1960 by the Senate Public Works Committee, and July 1958 and June 7, 1961 by the House Public Works Committee. The resolutions requested a review of the authorized Central and Southern Florida Flood Control project with respect to and including flood control measures for northern Palm Beach County and adjacent portions of Martin County, and with particular reference to provision of flood control improvements at and in the vicinity of Jupiter Inlet and the Loxahatchee River; modification of Canal 18; and of treating this entire area as a single watershed. The planning objectives of the study include:

a. Provide flood protection for the purpose of reducing flood damages to land use activities in the C-18 drainage basin and Jupiter estuary areas, during the period of analysis (1985-2035).

b. Provide additional water supplies to meet existing and future municipal, industrial, and agricultural needs within the study area, during the period of analysis.

c. Restore, enhance, and preserve the natural environment with emphasis on the protection of the Loxahatchee River.

d. Improve and maintain water quality in C-18, Loxahatchee River, and associated waters to meet consumptive and environmental needs within the study area.

e. Preserve and enhance fish and wildlife habitat within the study area.

f. Provide sufficient groundwater recharge and surface flows to protect coastal water supplies subject to saltwater intrusion within the study area.

g. Improve esthetics and pressure scenic or unique sites for future generations within the study area.

h. Protect and enhance for future generations those free-flowing portions of the Loxahatchee River and its tributaries which possess outstanding wild, scenic, recreation, or other related values.

2. Alternative plans capable of satisfying the objectives of the study include structural and nonstructural measures. Those identified alternatives are not considered all-inclusive, but are preliminary in nature. If during the scoping process additional water resource problems, needs and alternative measures are identified, these will be assessed during the planning process. Structural measures include modification of C-18, construction of C-300, pumping, creation of floodways and conservation pools, well field development, and sedimentation traps. Nonstructural measures include deep aquifer storage, flood plain zoning, floodproofing, evacuation and/or relocation, water conservation, waste water recycling and land treatment, onsite retention, and designation of preservation areas.

3. The process for determining the scope of issues to be addressed and identifying the significant issues related to alternative actions has been initiated through a public involvement program. Three public meetings/workshops were held during Stage I planning. Additional meetings will be scheduled during the study to provide an active and continuous participation by the public in the planning process. The study is being coordinated with the National Park Service, U.S. Geological Survey, U.S. Heritage Conservation and Recreation Service, U.S. Fish and Wildlife Service, South Florida Water Management District, and Florida Game and Freshwater Fish Commission. Affected Federal, State, and local agencies; Indian tribes; and other interested organizations and individuals are invited to identify issues, problems, needs, and alternative courses of action not already considered by communicating with the addressee listed below.

a. Significant issues to be analyzed in the DEIS include flood control, water quality, water supply, and preservation and enhancement of environmental quality.

b. Consultation with the Florida State Historic Preservation Officer and U.S. Heritage Conservation and Recreation Service will be initiated in accordance with the National Historic Preservation Act of 1966 and Executive Order 11593. The project is being coordinated with the U.S. Fish and Wildlife Service as required by the Fish and Wildlife Coordination Act of 1972. Section 7 requirements of the Endangered Species Act of 1973, as amended, will be initiated.

4. A scoping meeting will not be held.

5. The DEIS will be available for review in February 1982.

ADDRESS: Questions regarding the proposed action and DEIS can be referred to Dr. Lloyd Saunders, Chief of the Environment and Resources Branch, U.S. Army Corps of Engineers, Jacksonville District, P.O. Box 4970, Jacksonville, Florida 32232, telephone (904) 791-2202 or FTS 946-2202.

Dated: July 28, 1980.

James W. R. Adams,

Colonel, Corps of Engineers, District Engineer.

[FR Doc. 80-23681 Filed 8-5-80; 8:45 am]

BILLING CODE 3170-AJ-M

Intent To Prepare a Draft Environmental Impact Statement (DEIS) for a Proposed Addition of Four Pumps to the Delta Pumping Plant Near Tracy, Calif.

AGENCY: U.S. Army Corps of Engineers, DOD.

ACTION: Notice of intent to prepare a draft environmental impact statement (DEIS). The document will also serve as a draft environmental impact report under the California Environmental Quality Act.

SUMMARY: The State of California, Department of Water Resources, on October 21, 1975, applied for a Department of the Army permit for operation of the Delta Pumping Plant, Intake Channel, and Clifton Court Forebay, and for the installation and operation of four additional pumps at the pumping plant. The application was filed pursuant to Section 10 of the Rivers and Harbors Act of 1899 and by order of the United States District Court (Sierra Club v. Morton). By making application, the Department of Water Resources in no way waives its right to withdraw the application if it prevails in overturning the order of the court referenced to above.

To facilitate compliance with the District Court's order, the Corps has treated the application as if it were two applications; first, for approval of the existing facilities; second, for the installation and operation for four additional pumps. A public notice and draft EIS for the first application was published on December 21, 1978, and a final EIS is presently being prepared.

The purpose of the Delta Pumping Plant is to divert water from the Sacramento-San Joaquin Delta to the California Aqueduct, part of the State Water Project (SWP), for use in the San Joaquin Valley, South San Francisco Bay, and Southern California areas. This water is entirely contracted for by local water vending agencies.

Project water flows through the channels of the Delta to the forebay, through control gates into the forebay, and then through the intake channel to the pumping plant. The pumping plant lifts water 244 feet from the intake channel to the California Aqueduct. The plant was designed for 11 pumps, presently 7 pumps are installed with a pumping capability of 6300 cubic feet of water per second.

The four additional pumps could each pump 1,067 cubic feet per second and each would be driven by a 34,500-horsepower electric motor. These pumps would be paired to discharge through existing manifolds into two existing 15-foot diameter discharge lines.

The additional units are a component of the Department of Water Resources' program to balance water supplies with needs in the State Water Project's service areas. Future components being planned include a peripheral canal for transferring water across the Delta, additional reservoirs north and south of the Delta, ground water storage south of the Delta, and water conservation and recycling programs in the service areas.

The purposes of the additional pumping units are:

a. Alleviate scheduling problems for maintenance of the existing units,

b. Minimize the peak power requirements of the SWP and energy costs, and,

c. Convey future water supplies developed by the aforementioned water transfer and storage facilities.

The following alternatives have been identified to date. All alternatives identified below, involve operation in compliance with California State Water Resources Control Board Decision D-1485 and/or other constraints.

a. Permit denial, no action, i.e., continued operation with existing seven pumps.

b. Installation and operation of one, two, or three additional pumps.

c. Installation of four additional pumps, with operations on a monthly basis limited to the diversions which could be made with the existing seven pumps.

d. Installation of four additional pumps, with operations on an annual basis limited to what could be diverted with the existing seven pumps.

e. Installation of 4 pumps, with no limits on diversions.

On July 7th 1980, the Sacramento District issued a Public Notice of Application (No. 582A) to all known, interested parties. In this notice we requested, that the reviewers provide comment on the topical scope, alternatives, and major issues to be covered by the EIS. Along with our public notice the Department of Water Resources issued a "Notice of Preparation of Draft Environment Impact Statement/Environmental Impact Report" and a "Notice of Solicitation of Views During Predraft EIS/EIP Consultation Process."

Based on experience with the draft EIS for the existing pumping plant the significant issues will be:

(1) Effects on the San Francisco Bay ecosystem.

(2) Effects on Sacramento San Joaquin Delta water quality, fisheries and wildlife.

(3) Effects on water levels in nearby Delta channels.

(4) Effects on the State Water Project (SWP) service areas.

(5) Effects on energy requirements of the Delta Pumping Plant.

(6) The relationship of the four additional pumps to the planned peripheral canal and other future facilities of the SWP.

Environmental review is also required by the California Environmental Quality Act (CEQA). Thus, the environmental statement will be the joint document described in the above public notices.

We hope to accomplish the scoping process by mail with these notices because of large geographical area affected by the proposal. If additional scoping is needed, meetings will be held after the close of the comment period for the public notices.

We estimate that the draft EIS will be published in August 1981.

Questions about the proposed action and draft EIS can be directed to Mr. Tom Coe, Regulatory Section, U.S. Army Corps of Engineers, 650 Capitol Mall, Sacramento, California 95814, telephone (916) 440-2541 (FTS 448-2541).

Paul F. Kavanaugh,

Colonel, CE, District Engineer.

July 14, 1980.

[FR Doc. 80-23618 Filed 8-5-80; 8:45 am]

BILLING CODE 3710-GH-M

DEPARTMENT OF EDUCATION

National Advisory Council on Adult Education; Meeting

AGENCY: National Advisory Council on Adult Education.

ACTION: Notice of meeting.

SUMMARY: This notice sets forth the schedule and proposed agenda of a forthcoming meeting of the Program Liaison Committee of the National Advisory Council on Adult Education. This notice also describes the functions of the Council. Notice of this meeting is required under the Federal Advisory Committee Act (Pub. L. 92-463, Sec. 10(a)(2)).

DATE: August 21-22, 1980, 9:00 a.m. to 4:00 p.m.

ADDRESS: National Advisory Council on Adult Education, 425 13th Street, N.W., Suite 323, Washington, D.C.

FOR FURTHER INFORMATION CONTACT: Dr. Gary A. Eyre, Executive Director, National Advisory Council on Adult Education, 425 13th Street, N.W., Washington, D.C. 20004 (202/376-8892).

SUPPLEMENTARY INFORMATION: The National Advisory Council on Adult Education is established under Section 313 of the Adult Education Act (20 U.S.C. 1201). The Council is directed to:

Advise the Secretary in the preparation of general regulations and with respect to policy matters arising in the administration of this title, including policies and procedures governing the approval of State plans under section 306 and policies to eliminate duplication, and to effectuate the coordination of programs under this title and other programs offering adult education activities and services.

The Council shall review the administration and effectiveness of programs under this title, make recommendations with respect thereto, and make annual reports to the President of its findings and recommendations (including recommendations for changes in this title and other Federal laws relating to adult education activities and services). The President shall transmit each such report to the Congress together with his comments and recommendations.

The meeting of the Council shall be open to the public.

The proposed agenda includes:

Adult Education collaboration with other Human Service Programs.

Adult Education outreach with community based organizations.

Reauthorization issues.

Records shall be kept of all Committee proceedings, and shall be available for public inspection at the office of the National Advisory Council on Adult Education, 425 13th St., N.W., Suite 323, Washington, D.C. 20004.

Signed at Washington, D.C. on August 1, 1980.

Gary A. Eyre,

Executive Director, National Advisory Council on Adult Education.

[FR Doc. 80-23622 Filed 8-5-80; 8:45 am]

BILLING CODE 4000-01-M

DEPARTMENT OF ENERGY

Procurement and Contracts Management Directorate; Alternative Fuels Production Financial Assistance; Notice of Program Solicitation Availability

AGENCY: Department of Energy.

ACTION: Notice.

SUMMARY: In order to expedite the domestic development and production of alternative fuels and to reduce dependence on foreign supplies of energy resources by establishing such domestic production at maximum levels at the earliest time practicable, the Department of Energy (DOE) has been authorized by Congress (Supplemental Appropriations Bill for FY 1980) to provide financial assistance to incentivize and support the construction and operation of commercial scale alternative fuels production facilities.

Up to $100,000,000 is available for grants to support feasibility studies of projects leading to construction and operation of commercial scale facilities. Individual awards may not exceed $10,000,000.

An additional $200,000,000 is available for cooperative agreements with non-Federal entities to support commercial scale development of alternative fuel facilities. Individual awards may not exceed $25,000,000.

EFFECTIVE DATE: July 29, 1980.

FOR FURTHER INFORMATION CONTACT: Jean Leche (202) 633-8365 Alternative Fuels Task Force, Resource Applications, Mail Station 3344, Room 3500, 12th and Pennsylvania Avenue, NW., Washington, D.C. 20461.

SUPPLEMENTARY INFORMATION: The Program Solicitation for grant application for feasibility studies, Number DE-PS01-80RA50412, and the Program Solicitation for cooperative agreement proposals, Number DE-PS01-80RA50413, will become available on or about August 1, 1980. Organizations desiring a copy of these solicitations should send a written request to:

U.S. Department of Energy, Resource Applications, Mail Station 3344, Room 3500, 12th and Pennsylvania Avenue, NW., Washington, D.C. 20461.

Organizations that were on the mailing list for the previous Alternative Fuels Program Solcitations need not submit another request to receive this solicitation.

Issued in Washington, DC July 30, 1980.

Joseph P. Cappello,

Director, Office of Procurement Operations.

[FR Doc. 80-23604 Filed 8-5-80; 8:45 am]

BILLING CODE 6450-01-M

Tar Sands Definitional Workshop; Meeting

Notice is hereby given that the Office of Oil and Natural Gas within Resource Applications is holding a workshop to try to gather information to provide a basis for establishing a definition of tar sands. Representatives from industry, the Departments of Energy and the Interior, the Internal Revenue Service, the Congress, and several States have been invited to provide input on an appropriate definition. The workshop will be held at the U.S. Geological Survey National Center in Reston, Virginia, on Thursday, August 7, 1980, beginning at 9:00 a.m. and lasting until 3:30 p.m. If more time is required, the workshop will be continued on Friday, August 8, 1980, at 9:00 a.m.

The workship will be open to the public. The chairman of the workshop is empowered to conduct the meeting in a fashion that will, in his judgment, facilitate the orderly conduct of business. Any member of the public who wishes to file a written statement with the chairman will be permitted to do so, either before or after the meeting. Members of the pulic who wish to make an oral statement should inform Ira C. Mayfield, Acting Director, Office of Oil and Natural Gas, (202) 633-8395, prior to the meeting and reasonable provision will be made for their appearance of the agenda.

Issued at Washington, D.C. on July 29, 1980.

R. D. Langenkamp,

Deputy Assistant Secretary, Resource Development & Operations, Resource Applications.

[FR Doc. 80-23740 Filed 8-5-80; 8:45 am]

BILLING CODE 6450-01-M

Economic Regulatory Administration

Field Oil Co., Inc.; Action Taken on Consent Order

AGENCY: Economic Regulatory Administration, Department of Energy.

ACTION: Notice of action taken and opportunity for comment on consent order.

SUMMARY: The Economic Regulatory Administration (ERA) of the Department of Energy (DOE) announces action taken to execute a Consent Order and provides an opportunity for public comment on the Consent Order and on potential claims against the refunds deposited in an escrow account establishment pursuant to the Consent Order.

DATES: Effective date: July 22, 1980.

COMMENTS BY: September 5, 1980.

ADDRESS: Send comments to: Kenneth E. Merica, District Manager of Enforcement, P.O. Box 26247, Belmar Branch, Lakewood, Colorado, 80226.

FOR FURTHER INFORMATION CONTACT: Kenneth E. Merica, District Manager of Enforcement, P.O. Box 26247, Belmar Branch, Lakewood, Colorado, 80226. Phone: (303) 234-3195.

SUPPLEMENTARY INFORMATION: On July 22, 1980, the Office of Enforcement of the ERA executed a consent Order with

Field Oil Company, Inc. (Field) of Ogden, Utah. Under 10 CFR 205.199J(b), a Consent Order which involves a sum of less than $500,000 in the aggregate, excluding penalties and interest, becomes effective upon its execution.

I. The Consent Order

Field, with its home office located in Ogden, Utah, is a firm engaged in the business of purchasing covered products and reselling them to wholesale purchasers and ultimate consumers, without substantially changing their form, and is subject to the Mandatory Petroleum Price and Allocation Regulations at 10 CFR Parts 210, 211 and 212. To resolve certain civil actions which could be brought by the Office of Enforcement of the Economic Regulatory Administration as a result of its audit of Field, the Office of Enforcement, ERA, and Field entered into a Consent Order, the significant terms of which are as follows:

1. Total overcharge during the audit period (March 1, 1979, through July 31, 1979) on all covered gasoline products was: $20,237.87.

a. Wholesale Reseller Overcharge: $16,001.75.

b. Retail End-User Overcharge: $4,236.12.

2. Field violated the gasoline price regulations contained in 10 CFR 212.93(a)(1) of the Mandatory Petroleum Price Regulations by exceeding its "maximum legal selling price" for the covered gasoline products sold to Field's wholesale and retail customers.

3. Field has agreed to refund the total overcharge on or before September 30, 1980.

4. Field has paid a civil penalty of $5,059.25 in connection with the overcharges.

5. The provisions of 10 C.F.R. 205.199J, are applicable to the Consent Order.

II. Disposition of Refunded Overcharges

In this Consent Order, Field agrees to refund, in full settlement of any civil liability with respect to actions which might be brought by the Office of Enforcement, ERA, arising out of the transactions specified in I.1.a. above, the sum of $16,001.75, plus interest, on or before September 30, 1980. Refund of those overcharges will be in the form of certified check(s) made payable to the United States Department of Energy and will be delivered to the Assistant Administrator for Enforcement, ERA. These funds will remain in a suitable account pending the determination of their proper disposition.

The DOE intends to distribute the refund amounts in a just and equitable manner in accordance with applicable laws and regulations. Accordingly, distribution of such refunded overcharges requires that only those "persons" (as defined at 10 CFR 205.2) who actually suffered a loss as a result of the transactions described in the Consent Order receive appropriate refunds. Because of the petroleum industry's complex marketing system, it is likely that overcharges have been passed through as higher prices to subsequent purchasers. In fact, the adverse effects of the overcharges may have become so diffused that it is a practical impossibility to identify specific, adversely affected persons, in which case disposition of the refunds will be made in the general public interest by an appropriate means such as payment to the Treasury of the United States pursuant to 10 CFR 205.199I(a).

Furthermore, Field agrees to refund, in full settlement of any civil liability with respect to actions which might be brought by the Office of Enforcement, ERA, arising out of transactions specified in I.1.b. above, the sum of $4,236.12, plus interest, on or before September 30, 1980. Refund of those overcharges shall be in the form of payment by check or by credit memo against future purchases for each identified retail end-user overcharged.

III. Submissions of Written Comments

A. *Potential Claimants:* Interested persons who believe that they have a claim to all or a portion of the refund amount specified in I.1.a. above, should provide written notification of the claim to the ERA at this time. Proof of claims is not now being required. Written notification to the ERA at this time is requested primarily for the purpose of identifying valid potential claims to the refund amount. After potential claims are identified, procedures for the making of proof of claims may be established. Failure by a person to provide written notification of a potential claim within the comment period for this Notice may result in the DOE irrevocably disbursing the funds to other claimants or to the general public interest.

B. *Other Comments:* The ERA invites interested persons to comment on the terms, conditions, or procedural aspects of this Consent Order.

You should send your comments or written notification of a claim to Kenneth E. Merica, District Manager of Enforcement, P.O. Box 26247, Belmar Branch, Lakewood, Colorado 80226. You may obtain a free copy of this Consent Order by writing to the same address or by calling (303) 234-3195.

You should identify your comments or written notification of a claim on the outside of your envelope and on the documents you submit with the designation, "Comments on Field Oil Company, Inc. Consent Order." We will consider all comments we receive by 4:30 p.m., local time, on (30 days after publication). You should identify any information or data which, in your opinion, is confidential and submit it in accordance with the procedures in 10 CFR 205.9(f).

Issued in Lakewood, Colorado, on the 22nd day of July 1980.

Kenneth E. Merica,

District Manager of Enforcement, Rocky Mountain District.

[FR Doc. 80-23743 Filed 8-5-80; 8:45 am]

BILLING CODE 6450-01-M

Energy Supply and Environmental Coordination Act; Rescission of Prohibition Orders

Pursuant to 10 CFR 303.137(d), the Department of Energy (DOE) hereby gives notice that on July 31, 1980, it issued orders rescinding the Prohibition Orders issued on June 30, 1977, to the International Paper Company's Pine Bluff, Arkansas Plant, Units 1 and 2 (Docket No. OCU-0786) pursuant to Section 2 of the Energy Supply and Environmental Coordination Act of 1974 (ESECA), as amended (15 U.S.C. 791 *et seq.*).[1] This action was initiated by DOE under the authority granted to it by Section 2(f) of ESECA and in accordance with the implementing regulations, 10 CFR Part 303, Subpart J. The Prohibition Orders, if made effective by issuance of Notices of Effectiveness (NOE), would have prohibited the above-named major fuel burning installations (MFBI) from burning natural gas or petroleum products as their primary energy source.

By the terms of the Clean Air Act Amendments of 1977 (Pub. L. 95-95), the written concurrence of the Governor of the State in which the facility is located must be obtained before the Environmental Protection Agency (EPA) may certify to DOE that the outstanding Prohibition Orders can take effect. By letter of July 16, 1979, Arkansas Governor Bill Clinton advised EPA that, because of environmental problems involving the disposal of solid wastes by the local jurisdictions surrounding the Pine Bluff Plant and his desire to see

[1] Effective October 1, 1977, the responsibility for implementing ESECA was transferred by Executive Order No. 12009 from the Federal Energy Administration to the Department of Energy pursuant to the Department of Energy Organization Act (42 U.S.C. 7101 *et seq.*)

Pine Bluff Plant, Units 1 and 2 burn solid wastes as their primary energy source, he did not intend to concur on the Prohibition Orders requiring the conversion of the units to coal. Accordingly, by letter of February 6, 1980, EPA advised DOE that it could not certify the earliest date upon which Pine Bluff Plant, Units 1 and 2 would be able to burn coal as their primary energy source and be in compliance with applicable air pollution control requirements, as required by Section 2 of ESECA and Section 112(b)(2) of the Clean Air Act Amendments of 1977.

Based upon this information, DOE has determined that the outstanding Prohibition Orders issued to Pine Bluff Plant, Units 1 and 2 cannot be made effective without the EPA certification as required by 10 CFR 303.37(b)(1), and accordingly, DOE has rescinded the orders.

In its "Intention to Rescind a Prohibition Order" published in the Federal Register on March 25, 1980 (45 FR 19296), DOE gave notice of its intention to rescind the Prohibition Orders issued to the above-named MFBIs, and invited written comments on the proposed action. No comments were received during the period allotted for submission of written comments, and no issues were raised or called to DOE's attention, which would have caused DOE to terminate the rescission action.

These Rescission Orders were served on Mr. Gardiner L. Tucker, Vice President, Science and Technology, International Paper Company, 720 E. 42nd Street, New York, New York 10017, by registered mail, July 31, 1980. Copies of the Rescission Orders will be on display for any interestd members of the public to inspect at the DOE Public Docket Room located in Room B-120, 2000 M Street, NW., Washington, D.C. 20461, from 1:00 to 4:30 p.m., Monday through Friday of each week. Copies will also be available at the appropriate DOE regional office and in the Freedom of Information Reading Room, Room 5B-180, Forrestal Building, 1000 Independence Avenue, SW., Washington, D.C. 20585, between the hours of 8:15 a.m. and 4:15 p.m., Monday through Friday.

Any person aggrieved by the Rescission Orders may file an appeal with the DOE Office of Hearings and Appeals (previously the Office of Exceptions and Appeals) in accordance with 10 CFR Part 303, Subpart H. The appeal shall be filed within 30 days after service of the Rescission Orders. Service by registered mail is complete upon mailing. There has not been an exhaustion of administrative remedies until an appeal has been filed pursuant to Subpart H and the appellate proceeding is completed by the issuance of an order granting or denying the appeal.

Any questions regarding this recission action should be directed to DOE as follows: Steven A. Frank, ESECA Programs Branch, Department of Energy, Economic Regulatory Administration, Room 3318, 2000 M Street, NW., Washington, D.C. 20461, (202) 653-3701). Written questions should be identified on the envelope and in the correspondence with the designation, "International Paper Company, Pine Bluff 1 and 2—Rescission Orders".

(Energy Supply and Environmental Coordination Act of 1974 (15 U.S.C. 791 *et seq.*) as amended by Pub. L. 95-70 and Pub. L. 95-620; Federal Energy Administration Act of 1974 (15 U.S.C 761 *et seq.*) as amended by Pub. L. 95-70, and Pub. L. 95-91; Department of Energy Organization Act (42 U.S.C 7101 *et seq.*); E.O. 11790 (39 FR 23185); E.O. 12009 (42 FR 46167))

Issued in Washington, D.C., July 31, 1980.

Robert L. Davies,

Acting Assistant Administrator, Office of Fuels Conversion, Economic Regulatory Administration.

Rescission Orders

Registered Mail

To: International Paper Company, 220 E. 42nd Street, New York, New York 10017.
Attention: Mr. Gardiner L. Tucker, Vice President.

Docket No.	Owner	Plant and Units	Location
OCU-0786	International Paper Co.	Pine Bluff, 1 and 2.	Pine Bluff, Ark.

Pursuant to Section 2(f) of the Energy Supply and Environmental Coordination Act of 1974 (ESECA), as amended (15 U.S.C. 792(f)) and in accordance with the implementing regulations, 10 CFR Part 303, Subpart J ("Modification of Rescission of Prohibition Orders and Construction Orders"), the Economic Regulatory Administration of the Department of Energy (DOE)[1] hereby rescinds the Prohibition Orders issued on June 30, 1977, to the above-named major fuel burning installations (MFBI). Such orders, if made effective by the issuance of Notices of Effectiveness (NOE), would have prohibited these MFBIs from burning natural gas or petroleum products as their primary energy source.

By the terms of the Clean Air Act Amendments of 1977 (Pub. L. 95-95), the written concurrence of the Governor of the State in which the facility is located must be obtained before the Environmental Protection Agency (EPA) may certify to DOE that the outstanding Prohibition Orders can take effect. By letter of July 16, 1979, Arkansas Governor Bill Clinton advised EPA that, because of environmental problems involving the disposal of solid wastes by the local jurisdictions surrounding the Pine Bluff Plant and his desire to see Pine Bluff Plant, Units 1 and 2 burn solid wastes as their primary energy source, he did not intend to concur on the Prohibition Orders requiring the conversion of the units to coal. Accordingly, by letter of February 6, 1980, EPA advised DOE that it could not certify the earliest date upon which Pine Bluff Plant, Units 1 and 2 would be able to burn coal as their primary energy source and be in compliance with applicable air pollution control requirements, as required by Section 2 of ESECA and Section 112(b)(2) of the Clean Air Act Amendments of 1977.

Based upon this information, DOE has determined that the outstanding Prohibition Orders issued to Pine Bluff Plant, Units 1 and 2 cannot be made effective without the EPA certification as required by 10 CFR 303.37(b)(1), and accordingly, DOE hereby rescinds the orders.

In its "Intention to Rescind a Prohibition Order" published in the Federal Register on March 25, 1980 (45 FR 19296), DOE gave notice of its intention to rescind the Prohibition Orders issued to the above-named MFBIs, and invited written comments on the proposed action. No comments were received during the period allotted for submission of written comments, and no issues were raised or called to DOE's attention, which would have caused DOE to terminate the rescission action.

Any person aggrieved by these Rescission Orders may file an appeal with the DOE Office of Hearings and Appeals (previously the Office of Exceptions and Appeals) in accordance with 10 CFR Part 303, Subpart H. The appeal shall be filed within 30 days after service of the Rescission Orders. Service by registered mail is complete upon mailing. There has not been an exhaustion of administrative remedies until an appeal has been filed pursuant to Subpart H and the appellate proceeding is completed by the issuance of an order granting or denying the appeal.

Any questions regarding these Rescission Orders should be directed to DOE as follows: Steven A. Frank, ESECA Programs Branch, Department of Energy, Economic Regulatory Administration, Room 2104, 2000 M Street, NW., Washington, D.C. 20461 (telephone: (202) 653-3701). Written questions should be identified on the envelope and in the correspondence with the designation, "International Paper Company, Pine Bluff 1 and 2—Rescission Orders".

(Energy Supply and Environmental Coordination Act of 1974 (15 U.S.C. 791 *et seq.*) as amended by Pub. L. 95-70 and Pub. L. 95-620; Federal Energy Administration Act of 1974 (15 U.S.C. 761 *et seq.*) as amended by Pub. L. 95-70 and Pub. L. 95-91; Department of Energy Organization Act (42 U.S.C. 7101 *et seq.*); E.O. 11790 (39 FR 23185); E.O. 12009 (42 FR 46267))

[1] Effective October 1, 1977, the responsibility for implementing ESECA was transferred by Executive Order No. 12009 from the Federal Energy Administration to the Department of Energy pursuant to the Department of Energy Organization Act (42 U.S.C. 7101 *et seq.*).

Issued in Washington, D.C. July 31, 1980.

Robert L. Davies,

Assistant Administrator, Office of Fuels Conversion, Economic Regulatory Administration.

[FR Doc. 80-23581 Filed 8-5-80; 8:45 am]

BILLING CODE 6450-01-M

[ERA Docket No. 80-CERT 021]

Arizona Public Service Co.; Certification of Eligible Use of Natural Gas to Displace Fuel Oil

Arizona Public Service Company (Arizona Public), P.O. Box 21666, Phoenix, Arizona 85036, filed an application for certification of an eligible use of natural gas to displace fuel oil at its Ocotillo Plant in Tempe, Arizona, West Phoenix Plant in Phoenix, Arizona, Saguaro Plant in Red Rock, Arizona, and Yuma Plant in Yuma, Arizona, with the Administrator of the Economic Regulatory Administration (ERA) pursuant to 10 CFR Part 595 on May 30, 1980. Notice of that application was published in the Federal Register (45 FR 48181, July 18, 1980) and an opportunity for public comment was provided for a period of ten (10) calendar days from the date of publication. No comments were received.

Arizona Public intends to purchase natural gas from Bixco, Inc., Phoenix, Arizona. On October 2, 1979, Arizona Public was previously granted a certificate (ERA Docket No. 79-CERT-084) of eligible use of the same amounts of natural gas to displace fuel oil requested in this application to be used at these same facilities but purchased from the Delhi Gas Pipeline Company (Delhi). To date, no natural gas has been purchased from Delhi under the certification. In this application, Arizona Public requested that it still be permitted to purchase gas from Delhi, but indicated that the total amount of gas used to displace fuel oil, even if purchased from both sellers, would not exceed the volumes requested in this application. Therefore, as recommended by the applicant, ERA is terminating the earlier certificate (79-CERT-084) upon issuance of this certificate, but incorporating into this certificate the authority to purchase oil displacement gas from Delhi.

The ERA has carefully reviewed Arizona Public's application in accordance with 10 CFR Part 595 and the policy considerations expressed in the Final Rulemaking Regarding Procedures for Certification of the Use of Natural Gas to Displace Fuel Oil (44 FR 47920, August 16, 1979). The ERA has determined that Arizona Public's application satisfies the criteria enumerated in 10 CFR Part 595, and, therefore, has granted the certification and transmitted that certification to the Federal Energy Regulatory Commission. A copy of the transmittal letter and the actual certification are appended to this notice.

Issued in Washington, D.C., on July 31, 1980.

F. Scott Bush,

Assistant Administrator, Regulations and Emergency Planning, Economic Regulatory Administration.

Department of Energy,
Washington, D.C.
July 31, 1980.

Re: ERA Certification of Eligible Use, ERA Docket No. 80-CERT-021, Arizona Public Service Company.

Mr. Kenneth F. Plumb, Secretary, Federal Energy Regulatory Commission, 825 North Capitol Street, N.E., Washington, D.C. 20426

Dear Mr. Plumb: Pursuant to the provisions of 10 CRF Part 595, I am hereby transmitting to the Commission the enclosed certification of an eligible use of natural gas to displace fuel oil. This certification is required by the Commission as a precondition to interstate transportation of fuel oil displacement gas in accordance with the authorizing procedures in 18 CFR Part 284, Subpart F. As noted in the certificate, it is effective for one year from the date of issuance, unless a shorter period of time is required by 18 CFR Part 284, Subpart F. Also as noted in the certificate, the earlier certification (ERA Docket No. 79-CERT-084) issued to Arizona Public Service Company on October 2, 1979 authorizing the purchase of oil displacement gas from the Delhi Gas Pipeline Company (Delhi) is terminated upon the issuance of this certificate, but the authority to purchase gas from Delhi is incorporated in this certificate. A copy of the enclosed certification is also being published in the Federal Register and provided to the applicant.

Should the Commission have any further questions, please contact Mr. Albert F. Bass, Deputy Director, Division of Natural Gas, Economic Regulatory Administration, 2000 M Street, NW, Room 7108, Washington, D.C. 20461, telephone (202) 653-3286. All correspondence and inquiries regarding this certification should reference ERA Docket No. 80-CERT-021.

Sincerely,

F. Scott Bush

Assistant Administrator, Regulations and Emergency Planning, Economic Regulatory Administration.

Enclosure:

Certification by the Economic Regulatory Administration to the Federal Energy Regulatory Commission of the Use of Natural Gas for Fuel Oil Displacement by the Arizona Public Service Co.

[ERA Docket No. 80-CERT-021]

Application for Certification

Pursuant to 10 CFR Part 595, Arizona Public Service Company (Arizona Public) filed an application for certification of an eligible use of 10,832,000 Mcf per year for the Ocotillo Plant, 1,671,000 Mcf per year for the West Phoenix Plant, 5,470,000 Mcf per year for the Saguaro Plant, and 2,808,000 Mcf per year for the Yuma Plant, with the Administrator of the Economic Regulatory Administration (ERA) on May 30, 1980. The application states that the eligible seller of the gas is Bixco, Inc. (Bixco) and that the gas will be transported by the El Paso Natural Gas Company. The eligible seller in the previous certificate (ERA Docket No. 79-CERT-084) for the same volumes is the Delhi Gas Pipeline Company (Delhi). Arizona Public requested that ERA terminate the earlier Certification of Eligible Use in Docket No. 79-CERT-084 and include both Bixco and Delhi as eligible sellers in a new certification.

This application indicates that the use of this natural gas is estimated to displace the following volumes of No. 6 and No. 2 fuel oil per year:

Estimated Barrels of Fuel Oil Displacement

	No. 6 fuel oil (0.9 percent sulfur)	No. 2 fuel oil (0.5 percent sulfur)
Ocotillo Plant	1,635,000	250,000
West Phoenix Plant	53,200	251,400
Saguaro Plant	715,800	243,800
Yuma Plant	346,300	147,800

The application also indicates that neither the gas nor the displaced fuel oil will be used to displace coal in the applicant's facilities.

Certification

Based upon a review of the information contained in the application, as well as other information available to ERA, the ERA hereby certifies, pursuant to 10 CFR Part 595, that the use of the following volumes of natural gas per year at Arizona Public's various plants purchased from Bixco and/or Delhi is an eligible use of gas within the meaning of 10 CFR Part 595:

Ocotillo Plant	10,832,000	Mcf/yr.
West Phoenix Plant	1,671,000	Mcf/yr.
Saguaro Plant	5,470,000	Mcf/yr.
Yuma Plant	2,808,000	Mcf/yr.

Effective Date

This certification is effective upon the date of issuance, and expires one year from that date, unless a shorter period of time is required by 18 CFR Part 284, Subpart F. It is effective during this period of time for the use of up to the same certified volumes of natural gas at the same facilities purchased from the same eligible sellers.

Upon the date of issuance of this certificate, the previous certificate in ERA Docket No. 79-CERT-084 is terminated.

Issued in Washington, D.C., on July 31, 1980.

F. Scott Bush,

Assistant Administrator, Regulations and Emergency Planning, Economic Regulatory Administration.

[FR Doc. 80-23744 Filed 8-5-80; 8:45 am]

BILLING CODE 6450-01-M

[ERA Docket No. 80-CERT-022]

International Harvester Co.; Certification of Eligible Use of Natural Gas To Displace Fuel Oil

International Harvester Company (International Harvester), 401 North Michigan Avenue, Chicago, Illinois 60611, filed an application for certification of an eligible use of natural gas to displace fuel oil at its foundry and factory complex located in Memphis, Tennessee, with the Administrator of the Economic Regulatory Administration (ERA) pursuant to 10 CFR Part 595 on June 9, 1980. Notice of that application was published in the Federal Register (45 FR 48182, July 18, 1980) and an opportunity for public comment was provided for a period of ten (10) calendar days from the date of publication. No comments were received.

The ERA has carefully reviewed International Harvester's application in accordance with 10 CFR Part 595 and the policy considerations expressed in the Final Rulemaking Regarding Procedures for Certification of the Use of Natural Gas to Displace Fuel Oil (44 FR 47920, August 16, 1979). The ERA has determined that International Harvester's application satisfies the criteria enumerated in 10 CFR Part 595, and, therefore, has granted the certification and transmitted that certification to the Federal Energy Regulatory Commission. A copy of the transmittal letter and the actual certification are appended to this notice.

Issued in Washington, D.C., on July 31, 1980.

F. Scott Bush,

Assistant Administrator, Regulations and Emergency Planning, Economic Regulatory Administration.

Department of Energy,
Washington, D.C., July 31, 1980.

Re ERA Certification of Eligible Use, ERA Docket No. 80-CERT-022, International Harvester Company.

Mr. Kenneth F. Plumb,
Secretary, Federal Energy Regulatory Commission, 825 North Capitol Street, N.E., Washington, D.C.

Dear Mr. Plumb: Pursuant to the provisions of 10 CFR Part 595, I am hereby transmitting to the Commission the enclosed certification of an eligible use of natural gas to displace fuel oil. This certification is required by the Commission as a precondition to interstate transportation of fuel oil displacement gas in accordance with the authorizing procedures in 18 CFR Part 284, Subpart F. As noted in the certificate, it is effective for one year from the date of issuance, unless a shorter period of time of time is required by 18 CFR Part 284, Subpart F. A copy of the enclosed certification is also being published in the Federal Register and provided to the applicant.

Should the Commission have any further questions, please contact Mr. Albert F. Bass, Deputy Director, Division of Natural Gas, Economic Regulatory Administration, 2000 M Street, N.W., Room 7108 Washington, D.C. 20461, telephone (202) 653-3286. All correspondence and inquiries regarding this certification should reference ERA Docket No. 80-CERT-022.

Sincerely,

F. Scott Bush,

Assistant Administrator, Regulations and Emergency Planning, Economic Regulatory Administration.

Certification by the Economic Regulatory Administration to the Federal Energy Regulatory Commission of the Use of Natural Gas for Fuel Oil Displacement by the International Harvester Co.

ERA Docket No. 80-CERT-022

Application for Certification. Pursuant to 10 CFR Part 595, International Harvester Company (International Harvester) filed an application for certification of an eligible use of up to 75,000 Mcf of natural gas per year for its foundry and factory complex located in Memphis, Tennessee, with the Administrator of the Economic Regulatory Administration (ERA) on June 9, 1980. The application states that the eligible seller of the gas is the Southern Ohio Energy Company (Southern Ohio), a wholly owned subsidiary of International Harvester and the gas will be transported by the Columbia Gas Transmission Corporation, the Texas Gas Transmission Corporation, and The Memphis Light, Gas and Water Division. The application indicates that the use of this natural gas is estimated to displace approximately 500,000 gallons (11,905 barrels) of No. 6 fuel oil (0.3 percent sulfur) per year. The application also indicates that neither the gas nor the displaced fuel oil will be used to displace coal in the applicant's facilities.

Certification. Based upon a review of the information contained in the application, as well as other information available to ERA, the ERA hereby certifies, pursuant to 10 CFR Part 595, that the use of up to 75,000 Mcf of natural gas per year at International Harvester's foundry and factory complex purchased from Southern Ohio is an eligible use of gas within the meaning of 10 CFR Part 595.

Effective Date. This certification is effective upon the date of issuance, and expires one year from that date, unless a shorter period of time required by 18 CFR Part 284, Subpart F. It is effective during this period of time for amounts not to exceed the certified volume when used to displace oil at the named facilities and when the gas is purchased from the eligible seller named in the certificate.

Issued in Washington, D.C., on July 31, 1980.

F. Scott Bush,

Assistant Administrator, Regulations and Emergency Planning, Economic Regulatory Administration.

[FR Doc. 80-23744 Filed 8-5-80; 8:45 am]

BILLING CODE 6450-01-M

Federal Energy Regulatory Commission

[Docket No. TA80-2-1 (PGA-80-2A)]

Alabama-Tennessee Natural Gas Co.; Proposed PGA Rate Adjustment

July 30, 1980.

Take notice that on July 25, 1980, Alabama-Tennessee Natural Gas Company (Alabama-Tennessee), P.O. Box 918, Florence, Alabama 35630, tendered for filing as part of its FPC Gas Tariff, Third Revised Volume No. 1, the following tariff sheet:

First Substitute Thirty-Third Revised Sheet No. 3-A

This tariff sheet has been filed to reflect a slight reduction in a similar filing by Alabama-Tennessee's supplier, Tennessee Gas Pipeline Company, a Division of Tenneco Inc., made on July 18, 1980 in Docket Nos. TA80-2-9 (PGA80-2) to become effective July 1, 1980. Accordingly, Alabama-Tennessee requests that its revised tariff sheet be made effective July 1, 1980 and, to permit this effective date, further requests a waiver of § 154.22 of the Commission's regulations to accomplish such effective date.

The revised tariff sheet provides for the following reduced rates:

Rate schedule	Rate after current adjustment
G-1:	
Demand	$2.12
Commodity	2.5032

Rate schedule	Rate after current adjustment
SG-1:	
Commodity	2.6581
I-1:	
Commodity	2.5728

Alabama-Tennessee states that copies of the filing have been mailed to all of its jurisdictional customers and affected State regulatory Commissions.

Any person desiring to be heard or to protest said filing should file a petition to intervene or protest with the Federal Energy Regulatory Commission, 825 North Capitol Street NE., Washington, D.C. 20426, in accordance with §§ 1.8 and 1.10 of the Commission's Rules of Practice and Procedure (18 CFR 1.8, 1.10). All such petitions or protests should be filed on or before August 15, 1980. Protests will be considered by the Commission in determining the appropriate action to be taken, but will not serve to make protestants parties to the proceeding. Any person wishing to become a party must file a petition to intervene. Copies of this filing are on file with the Commission and are available for public inspection.

Kenneth F. Plumb,

Secretary.

[FR Doc. 80-23699 Filed 8-5-80; 8:45 am]

BILLING CODE 6450-85-M

[Docket No. CP80-434]

Alaskan Northwest Natural Transportation Co.; Application

July 31, 1980.

Take notice that on July 1, 1980,[1] Alaskan Northwest Natural Gas Transportation Company (Applicant), P.O. Box 1526, Salt Lake City, Utah 84110, filed in Docket No. CP80-434 an application pursuant to Executive Order 10485, Executive Order 12038, and Delegation Order 0204-8 for a Permit to construct, operate, connect and maintain facilities at the international boundary in Alaska, United States, and the Yukon Territory, Canada, all as more fully set forth in the application which is on file with the Commission and open to public inspection.

Applicant herein proposes to construct, operate, connect and maintain at the international boundary between Alaska and the Yukon territory a fully enclosed meter building, four 24-inch diameter by 39-foot long meter runs, and a section of 48-inch pipeline. It is stated that these facilities are necessary to permit the transportation and delivery of natural gas from the Prudhoe Bay Area on the North Slope of Alaska to a point of interconnection with the proposed facilities of Foothills Pipeline, (Yukon) Ltd. (Foothills). Applicant states that all of the gas delivered by Applicant to Foothills (adjusted for heating value less fuel and unaccounted-for gas) would be transported and redelivered to the lower 48 states of the United States. Applicant asserts that this point of crossing of the Alaska segment of the Alaska Natural Gas Transportation System would be two miles south of the Alaska Highway intersection with the Alaska-Yukon border, and the metering station would be built in the vicinity of the nearby U.S. Customs Border Station.

Any person desiring to be heard or to make any protest with reference to said application should on or before August 22, 1980, file with the Federal Energy Regulatory Commission, Washington, D.C. 20426, a petition to intervene or a protest in accordance with the requirements of the Commission's Rules of Practice and Procedure (18 CFR 1.8 or 1.10). All protests filed with the Commission will be considered by it in determining the appropriate action to be taken but will not serve to make the protestants parties to the proceeding. Any person wishing to become a party to a proceeding or to participate as a party in any hearing therein must file a petition to intervene in accordance with the Commission Rules.

Kenneth F. Plumb,

Secretary.

[FR Doc. 80-23709 Filed 8-5-80; 8:45 am]

BILLING CODE 6450-85-M

[1] The application was initially tendered for filing on July 1, 1980; however, the fee required by § 159.1 of the Regulations under the Natural Gas Act (18 CFR 159.1) was not paid until July 2, 1980, thus the filing was not completed until the latter date.

[Docket No. EL78-13]

Central Virginia Electric Cooperative v. Appalachian Power Co.; Informal Settlement Conference

July 31, 1980.

There will be an informal settlement conference held on August 12, 1980 at the Federal Energy Regulatory Commission, 825 North Capitol Street, N.E., Washington, D.C. 20426 at 10:00 a.m. The room number will be posted on the second floor notice board.

Kenneth F. Plumb,

Secretary.

[FR Doc. 80-23710 Filed 8-5-80; 8:45 am]

BILLING CODE 6450-85-M

[Docket No. CP80-452]

Cimarron Transmission Co., Natural Gas Pipeline Co. of America, and United Gas Pipe Line Co.; Application

July 31, 1980.

Take notice that on July 17, 1980, Chevron Chemical Company (Chemical), 575 Market Street, San Francisco, California 94105, filed on behalf of Cimarron Transmission Company (Cimarron), 58 Broadlawn Village, Ardmore, Oklahoma 73481, Natural Gas Pipeline Company of America (Natural), 122 South Michigan Avenue, Chicago, Illinois 60603, and United Gas Pipe Line Company (United), P.O. Box 1478, Houston, Texas 77001, in Docket No. CP80-452 a joint application pursuant to Section 7(c) of the Natural Gas Act and Section 157.100 of the Regulations thereunder (18 CFR 157.100) for a certificate of public convenience and necessity authorizing the transportation of gas purchased by Chemical from Love County, Oklahoma, to Luling, Louisiana, and the construction and operation of facilities to effectuate such transportation, all as more fully set forth in the application which is on file with the Commission and open to public inspection.

Applicants state that Chemical purchases the natural gas at Marietta field, Love County, Oklahoma, and has entered into contracts with the other three companies to transport the gas to an anhydrous ammonia plant in Luling, Louisiana.

Under the five-year transportation agreement between Chemical and Cimarron dated July 1, 1980, Cimarron would take Chemical's gas from existing connections in the Marietta field, and transport the gas to an existing interconnection with Natural's facilities located at the outlet of Cimarron's measurement station in Love County, Oklahoma (Love Point). Applicants assert that Cimarron would not have to build any new facilities to transport and redeliver the contract maximum of 10,000 Mcf per day. Applicants further state that in the event Chemical does not take the entire amount of gas produced for its account, Cimarron has the option to purchase those non-taken quantities, predicated upon Natural's need for the gas.

It is stated that Chemical agrees to pay a monthly transportation and dehydration charge estimated to be $33,479.93, which when multiplied by the cost distribution factor of .166667 equals $5,580.

It is noted that Chemical and Natural entered into a separate five-year transportation agreement dated June 23,

1980. Pursuant to this agreement, Applicants state that Natural would redeliver thermally equivalent volumes less 7 percent retained for fuel usage of Chemical's gas received at the Love Point to an existing interconnection with United's facilities in Vermilion Parish, Louisiana (Vermilion Point). It is stated that Natural would transport 5,000 Mcf per day on a firm basis with up to a total of 10,000 Mcf per day on a firm basis with up to a total of 10,000 Mcf per day subject to capacity availability. Applicants assert that Natural would not build any new facilities as a result of this transportation, but if its mainline to its principle markets needs future capacity expansion, Chemical would either contribute a *pro rata* share of costs or suffer reduction in firm transportation volumes. Applicants further assert that Natural would charge Chemical 13.1 cents per Mcf for the transportation service.

Applicants state that pursuant to a 5-year transportation contract between Chemical and United dated June 20, 1980, United would receive Chemical's gas from Natural at the Vermilion Point. It is stated that United would then redeliver the gas, or equivalent quantities, less 2.3 percent for fuel use, to Chemical at the ammonia manufacturing facility located near Luling, St. Charles Parish, Louisiana, and would charge Chemical 19.4 cents per Mcf for the transportation service.

Applicants state that to facilitate United's redeliveries to Chemical, a new measuring and regulating facility would be built at a mutually agreeable point on United's Paradis Line in St. Charles Parish, Louisiana. It is stated that Chemical would reimburse United for all expenses incurred in constructing the new facilities which are estimated to be $32,000. Applicants state that United would operate and maintain the facility which Chemical would own.

Applicants further state that pursuant to § 157.103 of the Commission's Regulations, the subject gas would be used as process fuel and/or feedstock in the ammonia production process as an essential agricultural use.

Any person desiring to be heard or to make protest with reference to said application should on or before August 22, 1980, file with the Federal Energy Regulatory Commission, Washington, D.C. 20426, a petition to intervene or a protest in accordance with the requirements of the Commission's Rules of Practice and Procedure (18 CFR 1.8 or 1.10) and the Regulations under the Natural Gas Act (18 CFR 157.10). All protests filed with the Commission will be considered by it in determining the appropriate action be taken will not serve to make the protestants parties to the proceeding. Any person wishing to become a party to a proceeding or to participate as a party in any hearing therein must file a petition to intervene in accordance with the Commission's Rules.

Take further notice that, pursuant to the authority contained in and subject to jurisdiction conferred upon the Federal Energy Regulatory Commission by Sections 7 and 15 of the Natural Gas Act and the Commission's Rules of Practice and Procedure, a hearing will be held without further notice before the Commission or its designee on this application if no petition to intervene is filed within the time required herein, if the Commission on its own review of the matter finds that a grant of the certificate is required by the public convenience and necessity. If a petition for leave to intervene is timely filed, or if the Commission on its own motion believes that a formal hearing is required, further notice of such hearing will be duly given.

Under the procedure herein provided for, unless otherwise advised, it will be unnecessary for Applicants to appear or be represented at the hearing.

Kenneth F. Plumb,

Secretary.

[FR Doc. 80-23711 Filed 8-5-80; 8:45 am]

BILLING CODE 6450-85-M

[Docket No. CP80-455]

Consolidated Gas Supply Corp.; Application

July 31, 1980.

Take notice that on July 21, 1980, Consolidated Gas Supply Corporation (Applicant), 445 West Main Street, Clarksburg, West Virginia 26301, filed in Docket No. CP80-445 an application pursuant to Section 7(c) of the Natural Gas Act for a certificate of public convenience and necessity authorizing the construction and operation of approximately 9.5 miles of pipeline in Wetzel and Tyler Counties, West Virginia, and for authorization to convert an existing pipeline to production service, all as more fully set forth in the application which is on file with the Commission and open to public inspection.

Applicant states that its existing Line No. F-9, which is the principal supply feed for Sustersville and Paden City, West Virginia, has become pitted, corroded, and damaged by soil slippage. Moreover, it is stated, that the annual and peak day requirements in the Sisterville/Paden area have been increasing and are expected to increase further in the future, and that the Line No. F-9 in its present condition is unable to handle the increase in flows and gas pressure sufficient to meet these peak demands. Therefore, Applicant proposes to construct and operate approximately 9.5 miles of new 8-inch pipeline from a point on its existing line in Wetzel County, West Virginia, to a point near the present western terminus of Line No. F-9 at Buck Run in Tyler County. Applicant estimates the cost of the proposed pipeline facilities to be $1,494,559 which would be financed from funds on hand and funds to be obtained from Applicant's parent, Consolidated Natural Gas Company.

Applicant further notes that it is willing to purchase new local gas supplies, but because of this gas' high levels of water content it is unsuitable for direct market delivery. Applicant proposes to retain Line No. F-9 from Buck Run to its eastern terminus at Applicant's Hastings, West Virginia, extraction plant and to integrate the line with Applicant's low-pressure production facilities in this area. Applicant states that this new facility configuration would permit Applicant to purchase present and future locally produced gas and condition these supplies in its Hastings plant, thereby lowering Line No. F-9 operation pressure and more economically modernizing the supply feed to the Sistersville/Paden market area.

Any person desiring to be heard or to make any protest with reference to said application should on or before August 22, 1980, file with the Federal Energy Regulatory Commission, Washington, D.C. 20426, a petition to intervene or a protest in accordance with the requirements of the Commission's rules of Practice and Procedure (18 CFR 1.8 or 1.10) and the Regulations under the Natural Gas Act (18 CFR 157.10). All protests filed with the Commission will be considered by it in determining the appropriate action to be taken but will not serve to make the protestants parties to the proceeding. Any person wishing to become a party to a proceeding or to participate as a party in any hearing therein must file a petition to intervene in accordance with the Commission's Rules.

Take further notice that, pursuant to the authority contained in and subject to jurisdiction conferred upon the Federal Energy Regulatory Commission by Sections 7 and 15 of the Natural Gas Act and the Commission's Rules of Practice and Procedure, a hearing will be held without further notice before the Commission or its designee on this application if no petition to intervene is

filed within the time required herein, if the Commission on its own review of the matter finds that a grant of the certificate is required by the public convenience and necessity. If a petition for leave to intervene is timely filed, or if the Commission on its own motion believes that a formal hearing is required, further notice of such hearing will be duly given.

Under the procedure herein provided for, unless otherwise advised, it will be unnecessary for Applicant to appear or be represented at the hearing.

Kenneth F. Plumb,

Secretary.

[FR Doc. 80-23712 Filed 8-5-80; 8:45 am]

BILLING CODE 6450-85-M

[Docket No. CP80-450]

El Paso Natural Gas Co.; Application

July 31, 1980.

Take notice that on July 11, 1980, El Paso Natural Gas Company (Applicant), P.O. Box 1492, El Paso, Texas 79978, filed in Docket No. CP80-450 an application pursuant to Section 7(c) of the Natural Gas Act for a certificate of public convenience and necessity authorizing the transportation and delivery of up to 750 Mcf of natural gas per day, on an exchange basis, with Warren Petroleum Company (Warren) at an existing point of delivery located in Lea County, New Mexico, all as more fully set forth in the application which is on file with the Commission and open to public inspection.

Applicant states that it and Warren are parties to certain residue gas purchase agreements dated February 3, 1954, and March 1, 1972, as amended, which agreements provide for the sale by Warren and the purchase by Applicant at the outlet of Saunders Gas Processing Plant located in Lea County, New Mexico, of all volumes of surplus residue gas processed in said plant and attributable to certain sources set forth in the agreements. In addition, it is stated that Warren processes at the Saunders Gas Processing Plant and delivers to Applicant certain quantities of gas attributable to Applicant's production in the vicinity of said plant. In the daily operation of the Saunders Gas Processing Plant, Warren purchases from Applicant up to 750 Mcf of natural gas per day at a point of interconnection of the pipeline facilities of Applicant and Warren located in Lea County, New Mexico, for use as fuel at its Saunders Field Booster Station, it is said. Applicant states that the said volumes of natural gas sold to Warren by Applicant are now classified as Priority 3 deliveries under Applicant's currently effective interim curtailment plan prescribed by the Commission in Docket No. RP72-6.

Applicant additionally states that in view of the reclassification of the subject deliveries of natural gas to Warren from a Priority 2 delivery to a Priority 3 delivery, Warren has expressed concern that its continued operation of the Saunders Gas Processing Plant could be seriously affected, and the sale and delivery of residue gas to Applicant may be partially or totally interrupted from time to time as a result of the extensive periods of partial or total curtailment of Priority 3 deliveries which have occurred and are expected to continue to occur on Applicant's interstate transmission system. Similary, Applicant asserts that it is concerned that during periods of curtailment of Priority 3 deliveries, Warren's Saunders Field Booster Station may experience difficulties due to the use by Warren of casinghead gas for fuel thereby causing a shutdown of such facilities, which shutdown would force Warren also to shut down its Saunders Gas Processing Plant. Applicant further submits that such a shutdown, whether it be caused by Applicant's curtailment of Priority 3 deliveries or difficulties in the operation of Warren's compressor facilities due to the use of casinghead gas, would interrupt the flow of gas (approximately 11,133 Mcf per day) which Applicant would otherwise have received and purchased from Warren and utilized in serving its system requirements.

It is stated that in consideration of Warren's concern, as well as Applicant's desire to insure continuity of deliveries of gas from Warren's Saunders Gas Processing Plant, applicant and Warren have entered into a gas exchange agreement dated April 7, 1980, wherein Applicant has agreed to deliver to Warren and Warren has agreed to accept and receive from Applicant, at the existing point of interconnection between the pipeline facilities of Applicant and Warren in Lea County, New Mexico, such quantity of pipeline quality natural gas as Warren may need, from time to time, not to exceed 750 Mcf per day for use in the operation of Warren's Saunders Field Booster Station which serves its Saunders Gas Processing Plant. In exchange therefor, Warren has agreed to deliver concurrently to Applicant at Applicant's existing meter station located at the outlet of the Saunders Gas Processing Plant and Applicant has agreed to accept and receive for the account of Warren a quantity of surplus residue gas equivalent, on a million Btu basis, to the total quantities of pipeline quality natural gas delivered by Applicant to Warren, it is said.

The exchange arrangement set forth herein would insure that pipeline quality natural gas would be available to Warren without interruption for use in fueling its Saunders Field Booster Station and thereby operating its Saunders Gas Processing Plant. In addition, it is asserted that the exchange arrangement would insure Applicant of the uninterrupted availibilty of residue gas from Warren's Saunders Gas Processing Plant for use on Applicant's interstate transmission system.

Any person desiring to be heard or to make any protest with reference to said application should on or before August 22, 1980, file with the Federal Energy Regulatory Commission, Washington, D.C. 20426, a petition to intervene or a protest in accordance with the requirements of the Commission's Rules of Practice and Procedure (18 CFR 1.8 or 1.10) and the Regulations under the Natural Gas Act (18 CFR 157.10). All protests filed with the Commission will be considered by it in determining the appropriate action to be taken but will not serve to make the protestants parties to the proceeding. Any person wishing to become a party to a proceeding or to participate as a party in any hearing therein must file a petition to intervene in accordance with the Commission's Rules.

Take further notice that, pursuant to the authority contained in and subject to jurisdiction conferred upon the Federal Energy Regulatory Commission by Sections 7 and 15 of the Natural Gas Act and the Commission's Rules of Practice and Procedure, a hearing will be held without further notice before the Commission or its designee on this application if no petition to intervene is filed within the time required herein, if the Commission on its own review of the matter finds that a grant of the certificate is required by the public convenience and necessity. If a petition for leave to intervene is timely filed, or if the Commission on its own motion believes that a formal hearing is required, further notice of such hearing will be duly given.

Under the procedure herein provided for, unless otherwise advised, it will be unnecessary for Applicant to appear or be represented at the hearing.

Kenneth F. Plumb,

Secretary.

[FR Doc. 80-23713 Filed 8-5-80; 8:45 am]

BILLING CODE 6450-85-M

[Docket No. CP80-449]

El Paso Natural Gas Co.; Application

July 31, 1980.

Take notice that on July 11, 1980, El Paso Natural Gas Company (Applicant), P.O. Box 1492, El Paso, Texas 79978, filed in Docket No. CP80-449 an application pursuant to Section 7(c) of the Natural Gas Act for a certificate of public convenience and necessity authorizing the construction and operation of certain facilities and the transportation and delivery of natural gas, on an exchange basis, with Amoco Production Company (Amoco) at a proposed point of delivery located in Andrews County, Texas, all as more fully set forth in the application which is on file with the Commission and open to public inspection.

Applicant states that it and Amoco are parties to the 3-Bar Residue Gas Purchase Agreement dated March 1, 1966, as amended (3-Bar Agreement), which agreement provides for the sale by Amoco and the purchase by Applicant, at the outlet of the South Fullerton Gasoline Plant located in Andrews County, Texas, of all volumes of surplus residue gas processed in said plant attributable to certain sources set forth in the 3-Bar Agreement.

It is said that Amoco has, in the past, utilized a portion of the treated casinghead gas attributable to production from the 3-Bar Field for use in operating its 3-Bar Field facilities and appurtenances thereto. However, with the past decline in gas reserves available from the 3-Bar Field, Applicant states that Amoco has determined that its field processing facilities could no longer be efficiently operated and has, therefore, removed such processing facilities from the 3-Bar Field. Upon the removal of the above-mentioned facilities, Amoco utilized the untreated casinghead gas to fuel its 3-Bar Field facilities, it is said. Applicant asserts that the continued use of such rich high Btu casinghead gas in Amoco's 3-Bar Field facilities has caused difficulties which could force Amoco to shut down such field facilities, thereby ceasing the flow of casinghead gas from the 3-Bar Field to the South Fullerton Gasoline Plant and interrupting the sale and delivery of surplus residue gas to Applicant. Applicant further asserts that Amoco believes that processing in its South Fullerton Gasoline Plant of the volumes of casinghead gas now utilized by Amoco as fuel in the 3-Bar Field facilities would increase the efficiency of its South Fullerton Gasoline Plant.

In order that Amoco may have a constant and reliable supply of pipeline quality natural gas available to it for use in the operation of its 3-Bar Field facilities, which are an integral part of its South Fullerton Gasoline Plant operations, and in order to insure the continuity of the gas supply delivered from the South Fullerton Gasoline Plant by Amoco to Applicant for use on Applicant's interstate transmission system, Applicant states that it and Amoco have entered into a gas exchange agreement, dated June 12, 1980, wherein Applicant has agreed to deliver to Amoco and Amoco has agreed to accept and receive from Applicant, at a proposed point of delivery to be located in Andrews County, Texas, such quantities of pipeline quality natural gas as Amoco may need, from time to time, not to exceed 500 Mcf per day, for use in the operation of its 3-Bar Field facilities and/or appurtenances thereto. In exchange therefor, Applicant further states that Amoco has agreed to deliver concurrently to Applicant at Applicant's existing meter station located at the outlet of Amoco's South Fullerton Gasoline Plant, and Applicant has agreed to accept and receive, for the account of Amoco, a quantity of surplus residue gas equivalent, on an Mcf basis, to the total quantities of pipeline quality natural gas delivered by Applicant to Amoco.

In order to effectuate the delivery of pipeline quality natural gas to Amoco for use at its 3-Bar Field facilities, Applicant proposes to construct and operate the following facilities:

A 1-inch O.D. tap and valve assembly, with appurtenances, including one 2⅜-inch O.D. standard orifice-type meter station to be located at a point on Applicant's existing 20-inch O.D. Goldsmith-Dumas pipeline located in Andrews County, Texas.

Applicant further states that as a part of such arrangement, Amoco would be required to construct and operate, at its sole cost and expense, certain pipeline and regulating facilities required to receive deliveries of pipeline quality natural gas from Applicant at the proposed point of delivery.

The exchange agreement would continue in full force and effect for a period coterminous with the term of the 3-Bar Residue Gas Purchase Agreement dated March 1, 1966, between Applicant and Amoco.

Applicant states that the total estimated cost of those facilities proposed to be constructed and operated by Applicant is $8,200. Applicant further states that Amoco has agreed to reimburse Applicant for all actual costs and expenses incurred in the construction of such facilities.

Any person desiring to be heard or to make any protest with reference to said application should on or before August 22, 1980, file with the Federal Energy Regulatory Commission, Washington, D.C. 20426, a petition to intervene or a protest in accordance with the requirements of the Commission's Rules of Practice and Procedure (18 CFR 1.8 or 1.10) and the Regulations under the Natural Gas Act (18 CFR 157.10). All protests filed with the Commission will be considered by it in determining the appropriate action to be taken but will not serve to make the protestants parties to the proceeding. Any person wishing to become a party to a proceeding or to participate as a party in any hearing therein must file a petition to intervene in accordance with the Commission's Rules.

Take further notice that, pursuant to the authority contained in and subject to jurisdiction conferred upon the Federal Energy Regulatory Commission by Sections 7 and 15 of the Natural Gas Act and the Commission's Rules of Practice and Procedure, a hearing will be held without further notice before the Commission or its designee on this application if no petition to intervene is filed within the time required herein, if the Commission on its own review of the matter finds that a grant of the certificate is required by the public convenience and necessity. If a petition for leave to intervene is timely filed, or if the Commission on its own motion believes that a formal hearing is required, further notice of such hearing will be duly given.

Under the procedure herein provided for, unless otherwise advised, it will be unnecessary for Applicant to appear or be represented at the hearing.

Kenneth F. Plumb,

Secretary.

[FR Doc. 80-23719 Filed 8-5-80; 8:45 am]
BILLING CODE 6450-85-M

[Project No. 3226]

Harrison Western Corp.; Application for Preliminary Permit

July 30, 1980.

Take notice that Harrison Western Corporation (Applicant) filed on June 24, 1980, an application for preliminary permit [pursuant to the Federal Power Act, 16 U.S.C. 791(a)-825(r)] for proposed Project No. 3226 to be known as the Horsetooth Project located on the Cache La Poudre River near the Town of Fort Collins, Larimer County, Colorado, at the existing Horsetooth Dam owned by the United States Water and Power Resources Service (Township 7 North

Range 70 West N.M.P.M.). Correspondence with the Applicant should be directed to: Mr. Warren Harrison, Engineering Manager, Harrison Western Corporation, 1208 Quail Street, Lakewood, Colorado 80215.

Project Description—The proposed project would utilize an existing government dam and would consist of a powerhouse with four Ossberger turbines connected to four generators with a total rated capacity of 2,300 kW. A transmission line with a minimum length of 6,000 feet would be required. The project could generate up to 17,900,000 kWh annually, which would save the equivalent of 29,400 barrels of oil or 8,300 tons of coal.

Purpose of Project—Power generated by the project would be sold to either the Rural Electric Associate or Public Service Company of Colorado.

Proposed Scope and Cost of Studies under Permit—The work proposed under the preliminary permit would include economic analysis, preparation of preliminary engineering plans, and a study of environmental impacts. Based on results of these studies, Applicant would decide whether to proceed with more detailed studies and the preparation of an application for license to construct and operate the project. Applicant estimates that the cost of the work to be performed under the preliminary permit would be $60,000.

Purpose of Preliminary Permit—A preliminary permit does not authorize construction. A permit, if issued, gives the Permittee, during the term of the permit, the right of priority of application for license while the Permittee undertakes the necessary studies and examinations to determine the engineering, economic, and environmental feasibility of the proposed project, the market for the power, and all other information necessary for inclusion in an application for a license.

Agency comments—Federal, State, and local agencies that receive this notice through direct mailing from the Commission are invited to submit comments on the described application for preliminary permit. (A copy of the application may be obtained directly from the Applicant.) Comments should be confined to substantive issues relevant to the issuance of a permit and consistent with the purpose of a permit as described in this notice. No other formal request for comments will be made. If an agency does not file comments within the time set below, it will be presumed to have no comments.

Competing Applications—Anyone desiring to file a competing application must submit to the Commission, on or before October 6, 1980, either the competing application itself or a notice of intent to file a competing application. Submission of a timely notice of intent allows an interested person to file the competing application no later than December 5, 1980. A notice of intent must conform with the requirements of 18 CFR 4.33 (b) and (c), (*as amended* 44 FR 61328, October 25, 1979). A competing application must conform with the requirements of 18 CFR, 4.33 (a) and (d), (as amended, 44 FR 61328, October 25, 1979).

Comments, protests, or Petitions to Intervene—Anyone desiring to be heard or to make any protest about this application should file a petition to intervene or a protest with the Federal Energy Regulatory Commission, in accordance with the requirements of the Commission's Rules of Practice and Procedure, 18 CFR, 1.8 or 1.10 (1979). Comments not in the nature of a protest may also be submitted by conforming to the procedures specified in § 1.10 for protests. In determining the appropriate action to take, the Commission will consider all protests or other comments filed, but a person who merely files a protest or comments does not become a party to the proceeding. To become a party, or to participate in any hearing, a person must file a petition to intervene in accordance with the Commission's Rules. Any comments, protest, or petition to intervene must be filed on or before October 6, 1980. The Commission's address is: 825 North Capitol Street, NE., Washington, D.C. 20426. The application is on file with the Commission and is available for public inspection.

Kenneth Plumb,

Secretary.

[FR Doc. 80-23700 Filed 8-5-80; 8:45 am]

BILLING CODE 6450-85-M

[Project No. 3225]

Harrison Western Corp.; Application for Preliminary Permit

July 30, 1980.

Take notice that Harrison Western Corporation (Applicant) filed on June 24, 1980, an application for preliminary permit [pursuant to the Federal Power Act, 16 U.S.C. 791(a)-825(r)] for proposed Project No. 3225 to be known as the Ruedi Project located on the Fryingpan River near the Town of Basalt, Eagle and Pitkin Counties, Colorado, at the existing Ruedi Dam owned by the United States Water and Power Resources Service (Township 8 South, Range 84 West N.M.P.M.). Correspondence with the Applicant should be directed to: Mr. Warren Harrison, Engineering Manager, Harrison Western Corporation, 1208 Quail Street, Lakewood, Colorado 80215.

Project Description—The proposed project would utilize an existing government dam and would consist of a powerhouse with seven Ossberger turbines connected to seven generators with a total rated capacity of 4,200 kW. A transmission line with a minimum length of 4,400 feet would be required. The project could generate up to 32,700,000 kWh annually, which would save the equivalent of 53,700 barrels of oil or 15,140 tons of coal.

Purpose of Project—Power generated by the project would be sold to either the Rural Electric Associate or Public Service Company of Colorado.

Proposed Scope and Cost of Studies under Permit—The work proposed under the preliminary permit would include economic analysis, preparation of preliminary engineering plans, and a study of environmental impacts. Based on results of these studies, Applicant would decide whether to proceed with more detailed studies and the preparation of an application for license to construct and operate the project. Applicant estimates that the cost of the work to be performed under the preliminary permit would be $60,000.

Purpose of Preliminary Permit—A preliminary permit does not authorize construction. A permit, if issued, gives the Permittee, during the term of the permit, the right of priority of application for license while the Permittee undertakes the necessary studies and examinations to determine the engineering, economic, and environmental feasibility of the proposed project, the market for the power, and all other information necessary for inclusion in an application for a license.

Agency Comments—Federal, State, and local agencies that receive this notice through direct mailing from the Commission are invited to submit comments on the described application for preliminary permit. (A copy of the application may be obtained directly from the Applicant.) Comments should be confined to substantive issues relevant to the issuance of a permit and consistent with the purpose of a permit as described in this notice. No other formal request for comments will be made. If an agency does not file comments within the time set below, it will be presumed to have no comments.

Competing Applications—Anyone desiring to file a competing application must submit to the Commission, on or before October 6, 1980, either the competing application itself or a notice

of intent to file a competing application. Submission of a timely notice of intent allows an interested person to file the competing application no later than Dec. 5, 1980. A notice of intent must conform with the requirements of 18 CFR 4.33 (b) and (c), (as amended 44 FR 61328, October 25, 1979). A competing application must conform with the requirements of 18 CFR 4.33 (a) and (d), (as amended 44 FR 61328, October 25, 1979).

Comments, Protests, or Petitions to Intervene—Anyone desiring to be heard or to make any protest about this application should file a petition to intervene or a protest with the Federal Energy Regulatory Commission, in accordance with the requirements of the Commission's Rules of Practice and Procedure, 18 CFR, 1.8 or 1.10 (1979). Comments not in the nature of a protest may also be submitted by conforming to the procedures specified in § 1.10 for protests. In determining the appropriate action to take, the Commission will consider all protests or other comments filed, but a person who merely files a protest or comments does not become a party to the proceeding. To become a party, or to participate in any hearing, a person must file a petition to intervene in accordance with the Commission's Rules. Any comments, protest, or petition to intervene must be filed on or before October 6, 1980. The Commission's address is: 825 North Capitol Street, NE., Washington, D.C. 20426. The application is on file with the Commission and is available for public inspection.

Kenneth Plumb,

Secretary.

[FR Doc. 80-23701 Filed 8-5-80; 8:45 am]

BILLING CODE 6450-85-M

[Docket No. SA80-134]

Michigan Wisconsin Pipe Line Co.; Application for Adjustment

July 30, 1980.

Take notice that on July 10, 1980, Michigan Wisconsin Pipe Line Company (Applicant), One Woodward Avenue, Detroit, Michigan 48226, filed in Docket No. SA80-134 an application pursuant to section 502(c) of the Natural Gas Policy Act of 1978 and section 1.41 of the Commission's Rules of Practice and Procedure (18 CFR 1.41) for an interim and permanent exemption for the filing requirements of § 281.204(b)(2) of the Commission's Regulations, all as more fully set forth in the application which is on file with the Commission and open to public inspection.

Section 281.204(b)(2) of the Regulations requires an interstate natural gas pipeline company to update its index of customer requirements annually in order to reflect changes, if any, in its priorities of service. Applicant asserts that preparation of the annual update requires substantial time and expense on its part and the part of its customers and the Data Verification Committee. Applicant anticipates that it would be able to meet the full requirements of its customers in the near term as indicated in its Form No. 15 for the year ended December 31, 1979, and that it can meet its customers' requirements through 1981 on the basis of presently contracted and certificated gas supplies. Accordingly, Applicant submits that compliance with the filing requirements of § 281.204(b)(2) is unnecessary and would result in special hardship and unfair distribution of burdens to it and its customers.

Applicant states that although it believes that compliance with § 281.204(b)(2) is unnecessary at this time, at such time as its Form No. 16 indicates that it would not be able to meet the full requirements of its customers, Applicant would timely make the necessary tariff filings to comply with the Commission's Regulations.

Applicant states further that it is currently required to update its index of requirements by November 1, 1980, and that in order to provide sufficient time for the Commission to consider its request for a permanent exemption, Applicant also requests interim relief.

The procedures applicable to the conduct of this adjustment proceeding are found in Section 1.41 of the Commission's Rules of Practice and Procedure, Order No. 24, issued March 22, 1979.

Any person desiring to participate in this adjustment proceeding shall file a petition to intervene in accordance with the provisions of § 1.41. All petitions to intervene must be filed on or before August 21, 1980.

Kenneth F. Plumb,

Secretary.

[FR Doc. 80-23702 Filed 8-5-80; 8:45 am]

BILLING CODE 6450-85-M

[Docket No. CP79-189

Michigan Wisconsin Pipe Line Co.; Trunkline Gas Co.; Petition To Amend

July 31, 1980.

Take notice that on July 16, 1980, Michigan Wisconsin Pipe Line Company (Mich Wis), One Woodward Avenue, Detroit, Michigan 48226, and Trunkline Gas Company (Trunkline), P.O. Box 1642, Houston, Texas 77001, filed in Docket No. CP79-189 a joint petition to amend the order issued May 17, 1979, in the instant docket pursuant to Section 7(c) of the Natural Gas Act by authorizing the exchange of gas at additional delivery and redelivery points and the increase of the quantity of gas which would be exchanged, all as more fully set forth in the petition to amend which is on file with the Commission and open to public inspection.

Petitioners state that by order issued May 17, 1979, they were authorized to exchange up to 6,000 Mcf of natural gas per day pursuant to the terms of an exchange agreement between Trunkline and Mich Wis dated November 14, 1978. Petitioners state that Mich Wis makes deliveries of gas to Trunkline at the pipeline facilities of Stingray Pipeline Company (Stingray) in West Cameron Area Block 269, offshore Louisiana, and that Trunkline delivers equivalent volumes of exchange gas for Mich Wis at the High Island Offshore System (HIOS) pipeline at High Island Area Block A-332, offshore Texas, and/or an existing point of interconnection between the pipeline systems of Stingray and HIOS located in High Island Area Block A-330, offshore Texas.

Subsequent to the order, it is stated, Mich Wis acquired the right to purchase the gas reserves underlying West Cameron Area Blocks 537, 551, and 552, and agreed to participate as a joint owner in the lateral pipeline which connects the gas reserves underlying Block 537 to the Stingray pipeline facilities. Petitioners state that they have now amended their November 14, 1978, exchange agreement to provide for a new exchange point at Block 537 whereby Mich Wis can make deliveries of gas to Stingray for the account of Trunkline and permit Mich Wis to effectuate receipt of its Blocks 537, 551, and 552 gas supplies by exchange. It is further stated that the amended exchange agreement provides for an increase in the daily quantity of gas which can be exchanged from 6,000 Mcf per day to 15,000 Mcf per day. Moreover, Petitioners propose four additional points in the new exchange agreement where Trunkline can make redeliveries of exchange gas to Mich Wis. Petitioners describe the four points as follows:

(1) the outlet for the measurement facilities located on the High Island Block A-313 production platform at which point gas may be delivered by Trunkline for the account of Mich Wis

with measurement to be conducted at the High Island Block A-313 platform;

(2) an existing tap in High Island Block A-539 where deliveries can be made to HIOS by Trunkline for the account of Mich Wis with measurement to be conducted at High Island Block A-511;

(3) an existing tap in High Island Block A-316 where deliveries can be made to HIOS by Trunkline for the account of Mich Wis with measurement to be conducted at High Island Block A-317; and

(4) the existing tap in High Island Block A-343 between the outlet of the 20-inch pipeline owned by Trunkline and others and the platform manifold owned by HIOS where a portion of Trunkline's gas may be delivered to HIOS for the account of Mich Wis with measurement to be conducted at High Island Block A-342.

Petitioners contend that they would use their best efforts to balance volumes of gas received and redelivered. Moreover, it is stated that no charge would be made, and no new facilities required by either of the Petitioners in providing the amended exchange service.

Any person desiring to be heard or to make any protest with reference to said petition to amend should on or before August 22, 1980, file with the Federal Energy Regulatory Commission, Washington, D.C. 20426, a petition to intervene or a protest in accordance with the requirements of the Commission's Rules of Practice and Procedure (18 CFR 1.8 or 1.10) and the Regulations under the Natural Gas Act (18 CFR 157.10). All protests filed with the Commission will be considered by it in determining the appropriate action to be taken but will not serve to make the protestants parties to the proceeding. Any person wishing to become a party to a proceeding or to participate as a party in any hearing therein must file a petition to intervene in accordance with the Commission's Rules.

Kenneth F. Plumb,

Secretary.

[FR Doc. 80-23715 Filed 8-5-80; 8:45 am]

BILLING CODE 6450-85-M

[Docket No. CP79-223]

Michigan Wisconsin Pipe Line Co.; Petition To Amend

July 31, 1980.

Take notice that on July 14, 1980, Michigan Wisconsin Pipe Line Company (Petitioner), One Woodward Avenue, Detroit, Michigan 48226, filed in Docket No. CP79-223 a petition to amend the Commission's order issued June 8, 1979, in said docket pursuant to Section 7(c) of the Natural Gas Act and Section 157.7(b) of the Regulations thereunder (18 CFR 157.7(b)) so as to authorize the construction of a gas-purchase facility costing in excess of the prescribed single offshore project cost limitation of $3,500,000, all as more fully set forth in the petition to amend which is on file with the Commission and open to public inspection.

Petitioner states that by order of June 8, 1979, it was issued a budget-type certificate authorizing the construction of gas-purchase facilities aggregating $18 million pursuant to Section 157.7(b) of the Commission's Regulations.

Subsequently, Petitioner asserts that although anticipated total costs are still within the $18 million authorization, it has ascertained that one project has exceeded its budget such that its costs are now in excess of the single offshore project limitation of $3.5 million. Petitioner states that the project is a gas purchase facility comprised of 7.15 miles of 12-inch pipeline for the transportation of gas reserves from South Marsh Island Block 260, offshore Louisiana, to South Marsh Island Block 249. The costs of this project, Petitioner asserts, were originally estimated to be $3,114,300. Petitioner states that the project was completed on April 1, 1980, and put into service in late May 1980 and asserts that a revised work order has been compiled which reflects an estimated net upward revision in the cost of the project of $815,963 to $3,930,263.

Accordingly, Petitioner requests that the $3.5 million limitation contained in Section 157.7(b)(1)(iii) of the Commission's Regulations be waived to the extent required to authorize the construction of said gas-purchase facility project at a cost not to exceed $4,100,000.

Petitioner attributes the cost overruns experienced on the gas-purchase facility to four major factors. Petitioner asserts that the first factor was standby time for barge rental due to adverse weather conditions in November 1979. Petitioner submits that the second major factor concerned two incidents of damage to the pipeline during the initial construction period which delayed completion.

In addition, Petitioner states that Amoco as operator advised Petitioner in early December of 1979 of its plans to drill additional wells. Petitioner also states that by mutual agreement between it and Amoco, the commencement date of production initially projected to commence in November 1979 was postponed until the summer of 1980, and the contractor worked only intermittently on the project during the winter of 1979-1980. The third major factor which Petitioner attributes to the cost overrun was unexpected difficulty during late March 1980 in locating a subsea valve assembly in South Marsh Island Block 249 which, it is asserted, was necessary in order to connect the 12-inch pipeline to the existing system and stop the flow of gas through three leaking valves which had to be closed in order to complete the project. Petitioner submits that the fourth major factor was standby time for test boat rental due to adverse fog conditions in March 1980.

Any person desiring to be heard or to make any protest with reference to said petition to amend should on or before August 22, 1980, file with the Federal Energy Regulatory Commission, Washington, D.C. 20426, a petition to intervene or a protest in accordance with the requirements of the Commission's Rules of Practice and Procedure (18 CFR 1.8 or 1.10) and the Regulations under the Natural Gas Act (18 CFR 157.10). All protests filed with the Commission will be considered by it in determining the appropriate action to be taken but will not serve to make the protestants parties to the proceeding. Any person wishing to become a party to a proceeding or to participate as a party in any hearing therein must file a petition to intervene in accordance with the Commission's Rules.

Kenneth F. Plumb,

Secretary.

[FR Doc. 80-23716 Filed 8-5-80; 8:45 am]

BILLING CODE 6450-85-M

[Docket No. ER80-456]

Monongahela Power Co., West Penn Power Co., and Potomac Edison Co., Filing

July 31, 1980.

The filing Company submits the following:

Take notice that Allegheny Power Service Corporation (APSC) on July 23, 1980, tendered for filing on behalf of Monongahela Power Company (Monongahela), The Potomac Edison Company (Potomac), and West Penn Power Company (West Penn), the electric utilities which make up the integrated Allegheny Power System, Amendment No. 8 dated July 21, 1980 to the Operating Agreement dated January 1, 1973 between Monongahela, Potomac, and West Penn and Virginia Electric Power Company (Vepco) designated Monongahela Rate Schedule FPC No. 32, Potomac Rate Schedule FPC No 33,

West Penn Rate Schedule FPC No. 31, and Vepco Schedule FPC No. 99.

Amendment No. 8: (1) provides for increases in the demand charges for Short Term power from $0.70 to $0.85 per kilowatt-week and Short Term power obtained by the supplying party from another system from $0.24 per kilowatt-week; (2) provides for increases in the demand charges for Limited Term power from $3.75 to $4.50 per kilowatt-month and Limited Term power obtained by the supplying party from another system from 0.75 to $1.00 per kilowatt-month; and (3) places a $0.002 per kilowatt-hour cap ($0.001 when coming from a third party as required by the Commission in Rule 35.23 (f)) on the adders to the out-of-pocket costs of providing energy sold under the Short Term and Limited Term Schedules.

APSC requests waiver of the Commission's notice requirements to allow these increases to become effective August 1, 1979. APSC states that since Short Term Power and Energy transactions and Limited Term Power and Energy transactions are scheduled from time to time as load and capacity conditions on the systems of the parties dictate it is impossible to estimate the increases in revenues which would result from Amendment No. 8.

Any person desiring to be heard or to protest said application should file a petition to intervene or protest with the Federal Regulatory Commission, 825 North Capitol Street, N.E., Washington, D.C. 20426 in accordance with Sections 1.8 and 1.10 of the Commission's Rules of Practice and Procedure. All such petitions or protests should be filed on or before August 22, 1980. Protests will be considered by the Commission in determining the appropriate action to be taken, but will not make protestants parties to the proceeding. Any person wishing to become a party must file a petition to intervene. Copies of this application are on file with the Commission and are available for public inspection.

Kenneth F. Plumb,

Secretary.

[FR Doc. 80-23715 Filed 8-5-80; 8:45 am]

BILLING CODE 6450-85-M

[TA 80-2-26 (PGA 80-3, IPR 80-3, AP 80-2, LFUT 80-2, and TT 80-2)]

Natural Gas Pipeline Co. of America; Change in Rates

July 31, 1980.

Take notice that on July 24, 1980, Natural Gas Pipeline Company of America (Natural) Submitted for filing as part of its FERC Gas Tariff, Third Revised Volume No. 1, the below listed tariff sheets to be effective September 1, 1980:

Third Substitute Fortieth Revised Sheet No. 5
Second Revised Sheet No. 5C
Second Revised Sheet No. 5D

Natural states the purpose of the filing is to reflect rate adjustments under various sections of the General Terms and Conditions of its tariff and various articles of the Stipulation and Agreement in Docket No. RP78-78 (hereinafter Settlement) which was approved by Commission letter order issued October 4, 1979. The overall effect of the filed for adjustments to Natural's DMQ-1 sales rate is a decrease of $0.01 in the demand component and an increase of 2.19¢ in the commodity component. Appropriate adjustments were also made to Natural's other sales rate schedules. The annualized revenue increase amounts to approximately $20.1 million. The various components are summarized below:

	Rate schedule DMQ-1 rate adjustment		Annualized jurisdictional revenue increase (decrease)
	Demand	Commodity	
Purchased Gas Cost Adjustment:			
Producer Supplier		[1]7.76	$72.4
Pipeline Supplier		1.22	11.4
Deferred Purchased Gas Cost		(2.80)	(26.1)
Total PGA		[1]6.18	57.7
Louisiana First Use Tax		[1](0.84)	(7.8)
Advance Payments		[1](0.55)	(5.1)
Transportation Tracker	(0.01)	[1](2.60)	(24.7)
Total	(0.01)	[1]2.19	20.1

[1]In cents.

Sheet Nos. 5C and 5D reflect the fact that all of Natural's sale-for-resale customers reported zero MSAC. Natural's four direct industrial customers have either furnished exemption affidavits or are exempt based on information contained in Natural's records. Therefore, there is no PGA reduction due to incremental pricing.

Natural also states that it has credited its Deferred Purchased Gas Cost account for approximately $8.4 million principal and interest under the terms of Settlement Article XVI, Sales Refund Obligation.

Natural requests waiver of the Commission regulations to the extent, if any, required to put the proposed tariff sheets into effect on September 1, 1980.

A copy of this filing has been mailed to Natural's jurisdictional customers and to interested state regulatory agencies.

Any person desiring to be heard or to protest said application should file a petition to intervene or protest with the Federal Energy Regulatory Commission, 825 North Capitol Street, N.W., Washington, D.C. 20426, in accordance with Section 1.8 and 1.10 of the Commission's Rules of Practice and Procedure (18 CFR 1.8, 1.10). All such petitions or protests should be filed on or before August 22, 1980. Protests will be considered by the Commission in determining the appropriate action to be taken, but will not serve to make protestants parties to the proceeding. Any person wishing to become a party must file a petition to intervene. Copies of this application are on file with the Commission and are available for public inspection.

Kenneth F. Plumb,

Secretary.

[FR Doc. 80-23718 Filed 8-5-80; 8:45 am]

BILLING CODE 6450-85-M

[Docket No. CP80-446]

Natural Gas Pipeline Co. of America; Application

July 31, 1980.

Take notice that on July 11, 1980, Natural Gas Pipeline Company of America (Applicant), 122 South Michigan Avenue, Chicago, Illinois 60603, filed in Docket No. CP80-446 an application pursuant to Section 7(c) of the Natural Gas Act for a certificate of public convenience and necessity authorizing the installation and operation of two leased 3250 horsepower compressor units and related facilities, one in Lea County, New Mexico, and the other in Eddy County, New Mexico, all as more fully set forth in the application which is on file with the Commission and open to public inspection.

Applicant states that its Permian System, which is the redelivery point of its only existing transportation agreement linking its two main supply lines, was certificated to operate at a design day capacity of 506,000 Mcf. However, Applicant states that due to declining wellhead pressures and contractual exchange agreements with lower delivery pressures, Applicant is currently limited to a line capacity of approximately 456,000 Mcf per day. Applicant states that the loss of capacity in the Permian System lessens its operational flexibility and restricts its ability to move gas during the upcoming heating season.

Applicant proposes to restore the lost capacity needed to deliver existing and new gas supplies by installing compression at two points on the system. However, Applicant states that it projects a decline subsequent to the 1981–82 heating season which might eliminate the need for the additional compression, so it wishes to lease the compression units with an option to purchase. Applicant states it would install a 3250 horsepower compressor and related facilities on its Lockridge Line in Lea County, New Mexico, and a second 3250 horsepower unit and related facilities on its Indian Basin Line in Eddy County, New Mexico. It is asserted that the proposed facilities would restore the daily design capacity of the Permian System to approximately 508,000 Mcf per day and provide for a maximum capability of 570,000 Mcf per day.

Applicant estimates the cost of installation of the units to be $1,284,000 which would be financed from funds on hand.

Any person desiring to be heard or to make any protest with reference to said application should on or before August 22, 1980, file with the Federal Energy Regulatory Commission, Washington, D.C. 20426, a petition to intervene or a protest in accordance with the requirements of the Commission's Rules of Practice and Procedure (18 CFR 1.8 or 1.10) and the Regulations under the Natural Gas Act (18 CFR 157.10). All protests filed with the Commission will be considered by it in determining the appropriate action to be taken but will not serve to make the protestants parties to the proceeding. Any person wishing to become a party to a proceeding or to participate as a party in any hearing therein must file a petition to intervene in accordance with the Commission's Rules.

Take further notice that, pursuant to the authority contained in and subject to jurisdiction conferred upon the Federal Energy Regulatory Commission by Sections 7 and 15 of the Natural Gas Act and the Commission's Rules of Practice and Procedure, a hearing will be held without further notice before the Commission or its designee on this application if no petition to intervene is filed within the time required herein, if the Commission on its own review of the matter finds that a grant of the certificate is required by the public convenience and necessity. If a petition for leave to intervene is timely filed, or if the Commission on its own motion believes that a formal hearing is required, further notice of such hearing will be duly given.

Under the procedure herein provided for, unless otherwise advised, it will be unnecessary for Applicant to appear or be represented at the hearing.

Kenneth F. Plumb,

Secretary.

[FR Doc. 80-23719 Filed 8-5-80; 8:45 am]

BILLING CODE 6450-85-M

[Docket No. CP79-357]

Panhandle Eastern Pipe Line Co.; Petition To Amend

July 31, 1980.

Take notice that on July 15, 1980, Panhandle Eastern Pipe Line Company (Petitioner), 3000 Bissonnet, Houston, Texas 77001, filed in Docket No. CP79-357 a petition to amend the order issued February 27, 1980, in the instant docket pursuant to Section 7(c) of the Natural Gas Act so as to authorize an increase in the horsepower to be contained in the proposed Warren Compressor Station, all as more fully set forth in the petition to amend which is on file with the Commission and open to public inspection.

By order of February 27, 1980, Petitioner was authorized to construct the Warren Compressor Station, in Carson County, Texas, and to install therein 1,200 horsepower of compression facilities the first year and an additional 600 horsepower the second year, it is said.

Subsequently, Petitioner states that it has reevaluated the operating conditions as well as the initial recoverable reserves estimated in the vicinity of the Warren Station and has determined that such reserves are more extensive than originally thought. Because of this reevaluation, Petitioner requests that the horsepower of one of the certified compression engines be increased from 600 to 730 horsepower, and that it be permitted to install an additional 2,920 horsepower of new compression to the Warren Compressor Station.

Petitioner asserts that the increased compression is necessary in order to provide it with the ability to deliver natural gas supplies from the Carson County, Texas, production area into its mainline system. The total cost of the additional proposed facilities is estimated to be $3,147,000, which cost would be financed from Petitioner's available funds, it is said.

Any person desiring to be heard or to make any protest with reference to said petition to amend should on or before August 22, 1980, file with the Federal Energy Regulatory Commission, Washington, D.C. 20426, a petition to intervene or a protest in accordance with the requirements of the Commission's Rules of Practice and Procedure (18 CFR 1.8 or 1.10) and the Regulations under the Natural Gas Act (18 CFR 157.10). All protests filed with the Commission will be considered by it in determining the appropriate action to be taken but will not serve to make the protestants parties to the proceeding. Any person wishing to become a party to a proceeding or to participate as a party in any hearing therein must file a petition to intervene in accordance with the Commission's Rules.

Kenneth F. Plumb,

Secretary.

[FR Doc. 80-23720 Filed 8-5-80; 8:45 am]

BILLING CODE 6450-85-M

[Docket No. CP67-383, *et al.*]

Peoples Natural Gas Co., Division of InterNorth, Inc.; Petition To Amend

July 31, 1980.

Take notice that on July 19, 1980, Peoples Natural Gas Company, Division of InterNorth, Inc. (Petitioner), 2223 Dodge Street, Omaha, Nebraska 68102, filed in Docket No. CP67-383, *et al.*, a petition to amend in the instant dockets certain orders, supplements or amendments to the orders issued to Northern Natural Gas Company, operating as People's Natural Gas Division so as to change the company's name to People's Natural Gas Company, Division of InterNorth, Inc., all as more fully set forth in the petition to amend which is on file with the Commission and open to public inspection.

Petitioner states that the stockholders of the Board of Directors of Northern Natural Gas Company resolved to change the company's name to InterNorth, Inc. on March 27, 1980. Petitioner reports that the Board declared that the following gas operations

Docket Number and Date of Commission Order

CP67-383, August 4, 1967.
CP69-277, July 28, 1969.
CP70-88, April 30, 1970.
CP70-132, February 24, 1970.
CP72-225,[1] September 22, 1972.
CP75-365, January 8, 1976.
CP76-385, October 27, 1976.
CP76-456, January 19, 1977.
CP76-533, February 2, 1977.
CP77-84,[1] May 24, 1977.
CP77-173,[2] September 30, 1977.
CP79-420, October 24, 1979.

would henceforth be conducted under the name of People's Natural Gas Company, Division of InterNorth, Inc. It

[1] Abandonments.
[2] Construction and abandonments.

is stated that Northern Natural Gas Company then filed an amendment to its corporate charter with the Secretary of the State of Delaware, the state of incorporation, effectuating the name change. Petitioner contends that under its new name the company would continue without interruption or cessation the identical operation and corporate activities formerly carried out by Northern Natural Gas Company, operating as People's Natural Gas Division.

Any person desiring to be heard or to make any protest with reference to said petition to amend should on or before August 22, 1980, file with the Federal Energy Regulatory Commission, Washington, D.C. 20426, a petition to intervene or a protest in accordance with the requirements of the Commission's Rules of Practice and Procedure (18 CFR 1.8 or 1.10) and the Regulations under the Natural Gas Act (18 CFR 157.10). All protests filed with the Commission will be considered by it in determining the appropriate action to be taken but will not serve to make the protestants parties to the proceeding. Any person wishing to become a party to a proceeding or to participate as a party in any hearing therein must file a petition to intervene in accordance with the Commission's Rules.

Kenneth F. Plumb,

Secretary.

[FR Doc. 80-23721 filed 8-5-80; 8:45 am]

BILLING CODE 6450-85-M

[Docket No. ER80-543]

Public Service Co. of Colorado; Filing

July 31, 1980.

The filing Company submits the following:

Take notice that Public Service Company of Colorado (PSCo) on July 23, 1980, tendered for filing an Energy Sales and Banking Agreement (Agreement) with Tri-State Generation and Transmission Association, Inc. (Tri-State).

PSCo states that the Agreement provides, *inter alia*, for exchanges of capacity and energy between the electric systems of PSCo and Tri-State either directly or through the systems of other parties. The Agreement provides for establishing terms and conditions of such exchanges, such as maintenance, standards for spinning reserve, standards for maintenance and settlement of accounts, and procedures for designating authorized representatives and their responsibilities.

PSCo states that copies of the filing were served upon all parties and affected stated commissions.

Any person desiring to be heard or to protest said filing should file a petition to intervene or protest with the Federal Energy Regulatory Commission, 825 North Capitol Street, N.E., Washington, D.C. 20426, in accordance with Sections 1.8 and 1.10 of the Commission's Rules of Practice and Procedure (18 CFR 1.8, 1.10). All such petitions or protests should be filed on or before August 20, 1980. Protests will be considered by the Commission in determining the appropriate action to be taken, but will not serve to make protestants parties to the proceeding. Any person wishing to become a party must file a petition to intervene. Copies of this filing are on file with the Commission and are available for public inspection.

Kenneth F. Plumb,

Secretary.

[FR Doc. 80-23722 Filed 8-5-80; 8:45 am]

BILLING CODE 6450-85-M

[Docket No. ER80-545]

Public Service Co. of Colorado; Filing

July 31, 1980.

The filing Company submits the following:

Take notice that Public Service Company of Colorado (PSCo) on July 23, 1980, tendered for filing as a rate schedule a contract for interconnections and transmission service between Tri-State Generation and Transmission Association, Inc., and PSCo.

The Agreement provides for the accepting and transmitting of power and energy by each party for delivery on the system of the other party. In addition, PSCo will provide emergency transmission back-up service for Tri-State during temporary outages of the Craig-Ault 345 KV transmission line. Under the conditions of the Agreement, either PSCo or Tri-State may provide non-firm transmission service for the other party to the extent that it has transmission capacity available for such purposes as a cost established in the Agreement.

PSCo states that copies of the filing were served upon all parties and affected state commissions.

Any person desiring to be heard or to protest said filing should file a petition to intervene or protest with the Federal Energy Regulatory Commission, 825 North Capitol Street, N.E., Washington, D.C. 20426, in accordance with Sections 1.8 and 1.10 of the Commission's Rules of Practice and Procedure (18 CFR 1.8, 1.10). All such protests or petitions should be filed on or before August 20, 1980. Protests will be considered by the Commission in determining the appropriate action to be taken, but will not serve to make protestants parties to the proceeding. Any person wishing to become a party must file a petition to intervene. Copies of this filing are on file with the Commission and are available for public inspection.

Kenneth F. Plumb,

Secretary.

[FR Doc. 80-23723 Filed 8-5-80; 8:45 am]

BILLING CODE 6450-85-M

[Docket No. ER80-544]

Public Service Co. of Colorado; Filing

July 31, 1980.

The filing Company submits the following:

Take notice that Public Service Company of Colorado (PSCo) on July 23, 1980, tendered for filing proposed changes in its FERC Electric Tariff. PSCo states that the proposed changes are Supplement No. 10, a Letter Agreement signed October 19, 1978, Supplement No. 11, Revision No. 17 of Exhibit A, and Revision No. 4 of Exhibit D to PSCo's Contract for Interconnections and Transmission Service with Western Area Power Administration, formerly the United States Department of the Interior, on file with the Commission under PSCo's FERC Rate Schedule No. 7.

Supplement No. 10, dated August 21, 1978, privides, *inter alia*, for extending the provisions covering the Henderson Temporary Point of Delivery. The Supplement also specifies the PSCo's Happy Jack Tap and Fort Morgan North Circuit Tap as additional points of delivery.

The Letter Agreement signed October 19, 1978, provides for the transmission of power and energy by WAPA for Company to the City of Julesburg, Colorado.

Supplement No. 11, dated December 29, 1978, provides, *inter alia*, for the transmission of electric power and energy by WAPA for PSCo to the City of Julesburg, Colorado. Supplement No. 11 also amends PSCo's compensatory arrangements with the United States for the transmission service provided by WAPA.

Revision No. 17 of Exhibit A, dated January 1, 1980, established a maximum kilowatt demand for the 1983 calendar year and deletes Colorado-Ute Electric Association from the Exhibit.

Revision No. 4 of Exhibit D, dated May 28, 1980, removes Loveland East Tap from WAPA wheeling service,

increases the amount of "Exchange Wheeling" from 124.5 MW to the amounts shown, changes to "Seasonal" Maximum Rates of Delivery and includes format changes.

PSCo states that copies of the filing were served upon all parties and affected stated commissions.

Any person desiring to be heard or to protest said filing should file a petition to intervene or protest with the Federal Energy Regulatory Commission, 825 North Capitol Street, N.E., Washington, D.C. 20426 in accordance with Sections 1.8 and 1.10 of the Commission's Rules of Practice and Procedure (18 CFR 1.8, 1.10). All such petitions or protests should be filed on or before August 20, 1980. Protests will be considered by the Commission in determining the appropriate action to be taken, but will not serve to make protestants parties to the proceeding. Any person wishing to become a party must file a petition to intervene. Copies of this filing are on file with the Commission and are available for public inspection.

Kenneth F. Plumb,

Secretary.

[FR Doc. 80-23724 Filed 8-5-80; 8:45 am]

BILLING CODE 6450-85-M

[[Docket No. ER80-313]

Public Service Co. of New Mexico; Order Granting Rehearing for Further Consideration

Issued July 30, 1980.

On June 30, 1980, the City of Gallup, New Mexico filed a petition for rehearing of the Commission's order issued May 30, 1980, in this proceeding. In that order, we *inter alia,* accepted for filing and suspended proposed increased rates and established procedures for determining the justness and reasonableness of those rates. The City of Gallup seeks review of Commission's determination of the applicable burden of proof for permitting the rates to be changed under the existing contract between it and Public Service Company of New Mexico.

In order to afford time for further evaluation of the issue raised by the City of Gallup, we shall grant rehearing for the limited purpose of further consideration. Under Section 1.34(d) of the Commission's regulations, no answers to the application for rehearing will be entertained since this order does not grant rehearing on any substantive issues.

The Commission orders: (A) Rehearing of our order of May 30, 1980, is hereby granted for the limited purpose of further consideration.

(B) The Secretary shall promptly publish this order in the Federal Register.

By the Commission.

Kenneth F. Plumb,

Secretary.

[FR Doc. 80-23703 8-5-80; 8:45 am]

BILLING CODE 6450-85-M

[Dockets Nos. RP73-114 (PGA79-2), RP74-24 (DCA79-2), RP74-73 (R&D79-2), and RP79-52]

Tennessee Gas Pipeline Co., a Division of Tenneco, Inc.; Motion of Tennessee Gas Pipeline Co. To Terminate Refund Obligation

July 30, 1980.

Take notice that on April 16, 1980, Tennessee Gas Pipeline Company (Tennessee) filed, pursuant to 18 CFR 1.12, a motion to terminate certain refund obligations imposed by Commission orders issued June 29, 1979, and August 24, 1979, in the above-listed proceeding.

Tennessee states that by Commission order issued on June 29, 1979, the Commission accepted certain tariff sheets, suspended their effectiveness and allowed them to become effective, on July 1, 1979, but subject to refund obligations. Specifically, the June 29, 1979, Commission order provides that the costs associated with purchases from producer-affiliates of the company are collected, subject to refund, pending the ultimate determination of the appropriate maximum lawful price to be charged such affiliated purchases under the regulations implementing the Natural Gas Policy Act of 1978 (NGPA), 15 U.S.C. 3301 *et seq.*

In addition, Tennessee notes that on August 24, 1979, the Commission in its subsequent rehearing order expressly limited the refund obligation with respect to Tennessee's May 21, 1979 filing to that portion of the attributable to pipeline-affiliate production.

Finally, Tennessee states that the Commission has promulgated final regulations governing the maximum lawful prices for pipeline-affiliated production [1] and that such regulations establish the justness and reasonableness of the purchases by the pipeline from its affiliates. Accordingly, Tennessee asserts that the refund obligations imposed on its May 31, 1979 filing respecting pipeline affiliate purchases should be removed and that the tariff sheets filed by Tennessee on May 31, 1979, be made fully effective.

Any person desiring to be heard or to protest said filing should file a petition to intervene or protest with the Federal Energy Regulatory Commission, 825 North Capitol Street, N.W., Washington, D.C. 20426, in accordance with §§ 1.8 and 1.10 of the Commission's Rules of Practice and Procedure (18 CFR 1.8, 1.10). All such petitions or protests should be filed on or before August 15, 1980. Protests will be considered by the Commission in determining the appropriate action to be taken, but will not serve to make protestants parties to the proceeding. Any person wishing to become a party must file a petition to intervene. Copies of this filing are on file with the Commission and are available for public inspection.

Kenneth F. Plumb,

Secretary.

[FR Doc. 80-23704 Filed 8-5-80; 8:45 am]

BILLING CODE 6450-85-M

[1] Order No. 58, "Final Rule Governing the Maximum Lawful Price for Pipeline, Distributor, or Affiliate Production," Docket No. RM80-7 (issued on November 14, 1979).

[Docket Nos. CP80-24, et al.]

Transcontinental Gas Pipe Line Corporation, et al.; Filing of Pipeline Refund Reports and Refund Plans

July 30, 1980.

Take notice that the pipeline listed in Appendix hereto have submitted to the Commission for filing proposed refund reports or refund plans. The date of filing, docket number, and type of filing are also shown on the Appendix.

Any person wishing to do so may submit comments in writing concerning the subject refund reports and plans. All such comments should be filed with or mailed to the Federal Energy Regulatory Commission, 825 North Capitol Street N.E., Washington, D.C. 20426, on or before August 15, 1980. Copies of the respective filings are on file with the Commission and available for public inspection.

Kenneth F. Plumb,

Secretary.

Appendix

Filing date	Company	Docket No.	Type filing
7/10/80	Transcontinental Gas Pipe Line Corporation.	CP80-24	Report.
7/22/80	Northwest Pipeline Corporation.	RP79-57	Report.
7/22/80	Northern Natural Gas Company.	CP76-31	Report.
7/22/80	South Georgia Natural Gas Company.	RP61-5	Report.

Appendix—Continued

Filing date	Company	Docket No.	Type filing
7/22/80	Consolidated Gas Supply Corporation.	RP72-157	Report.

[FR Doc. 80-23705 Filed 8-5-80; 8:45 am]
BILLING CODE 6450-85-M

[Docket No. CP80-448]

Trunkline Gas Co.; Application

July 31, 1980.

Take notice that on July 11, 1980, Trunkline Gas Company (Applicant), P.O. Box 1642, Houston, Texas 77001, filed in Docket No. CP80-448 an application pursuant to Section 7(c) of the Natural Gas Act for a certificate of public convenience and necessity authorizing the construction and operation of certain pipeline and related facilities in its natural gas supply area situated in Terrebonne Parish and offshore Louisiana, all as more fully represented in the application which is on file with the Commission and open to public inspection.

Applicant states that recent increases in the deliverability of some of Applicant's existing supply sources in South Timbalier Blocks 165 and 171 as well as new supplies attached in South Timbalier Blocks 190 and 156 have, in part, necessitated an increase in the capacity of Applicant's Terrebonne System in the eastern part of offshore Louisiana. Applicant also states that it has acquired new supplies of natural gas in Eugene Island Block 392 and is negotiating to purchase new supplies of natural gas from South Timbalier Block 53. Applicant further asserts that a significant potential supply of natural gas has become available in South Timbalier Block 170 and that it is currently negotiating the purchase of this gas from Exxon Company, U.S.A.

It is stated that Applicant's Terrebonne System is being utilized to transport approximately 200,000 Mcf of natural gas per day for several other parties, in addition to Applicant's own purchases of natural gas. Applicant has agreed to increase the volumes of gas being transported on behalf of Consolidated Gas Supply Corporation and Transcontinental Gas Pipe Line Corporation from South Timbalier Block 185, it is stated. Applicant states that it is making arrangements with Northern Natural Gas Company, Division of InterNorth, Inc. (Northern), to transport approximately 40,000 Mcf per day for Northern from Grand Isle Block 83 and West Delta Block 138.

To accommodate the additional volumes which have become available to Applicant from its offshore supply area, as well as the volumes of natural gas which other pipeline companies may have available for transportation onshore. Applicant proposes the construction of new pipeline facilities and additional looping of its Terrebonne System facilities. Specifically, Applicant proposes to construct 54.3 miles of 30-inch loop pipeline from Terrebonne Parish, Louisiana, to Ship Shoal Block 139, 18.4 miles of 20-inch pipeline from Ship Shoal Block 139 to South Timbalier Block 165, 6.9 miles of 16-inch new gathering pipeline from South Timbalier Block 170 and additions to its gas scrubber system at Applicant's compressor station near Patterson, Louisiana. Applicant asserts that the proposed facilities would increase the daily capacity of the Terrebonne System by 250,000 Mcf. Applicant estimates that the pipeline and related facilities would cost approximately $64,197,000 which would be financed from funds on hand and short-term bank borrowing.

Any person desiring to be heard or to make any protest with reference to said application should on or before August 22, 1980, file with the Federal Energy Regulatory Commission, Washington, D.C. 20426, a petition to intervene or a protest in accordance with the requirements of the Commission's Rules of Practice and Procedure (18 CFR 1.8 or 1.10) and the Regulations under the Natural Gas Act (18 CFR 157.10). All protests filed with the Commission will be considered by it in determining the appropriate action to be taken but will not serve to make the protestants parties to the proceeding. Any person wishing to become a party to a proceeding or to participate as a party in any hearing therein must file a petition to intervene in accordance with the Commission's Rules.

Take further notice that, pursuant to the authority contained in and subject to jurisdiction conferred upon the Federal Energy Regulatory Commission by Sections 7 and 15 of the Natural Gas Act and the Commission's Rules of Practice and Procedure, a hearing will be held without further notice before the Commission or its designee on this application if no petition to intervene is filed within the time required herein, if the Commission on its own review of the matter finds that a grant of the certificate is required by the public convenience and necessity. If a petition for leave to intervene is timely filed, or if the Commission on its own motion believes that a formal hearing is required, further notice of such hearing will be duly given.

Under the procedure herein provided for, unless otherwise advised, it will be unnecessary for Applicant to appear or be represented at the hearing.

Kenneth F. Plumb,
Secretary.

[FR Doc. 80-23725 Filed 8-5-80; 8:45 am]
BILLING CODE 6450-85-M

[Docket No. CP80-451]

United Gas Pipe Line Co.; Application

July 31, 1980.

Take notice that on July 16, 1980, United Gas Pipe Line Company (Applicant), P.O. Box 1478, Houston, Texas 77001, filed in Docket No. CP80-451 an application pursuant to Section 7(c) of the Natural Gas Act for a certificate of public convenience and necessity authorizing the continued transportation of natural gas for Natural Gas Pipeline Company of America (Natural), all as more fully set forth in the application which is on file with the Commission and open to public inspection.

Applicant proposes to continue the transportation of up to 5,000 Mcf of natural gas per day for Natural, as required by the gas transportation agreement of March 25, 1980, between Natural and Applicant. It is stated that this transportation service was commenced on June 11, 1980, under Applicant's blanket authorization in Docket No. CP80-137 issued pursuant to Section 284.221 of the Commission's Regulations.

Accordingy to Applicant, Natural has aquired a right to purchase natural gas produced from Eugene Island Block 72, offshore Louisiana. It is stated that gas delivered by, or for the account of, Natural to Applicant would be received at the producer's platform in Eugene Island Block 95, offshore Louisiana. Applicant would redeliver gas to Natural at:

(1) An existing interconnection located near Goodrich, Polk County, Texas;

(2) A newly certificated point on interconnection located in or near the James A. Williams Survey, A-717, Panola County, Texas; and/or

(3) An existing interconnection of the U-T Offshore System and Natural near Johnson's Bayou, Cameron Parish, Louisiana.

Applicant states that the transportation agreement between Applicant and Natural would remain in full force and effect for a primary term of 10 years beginning June 11, 1980, and

continuing from year to year thereafter until cancelled by either party upon proper notice. Applicant indicates that Natural would pay the rate in effect in the Northern and/or Southern Rate Zone, as applicable, less any amount attributable to gas consumed in the operation of Applicant's system. The transportation rate is currently 23.29 cents in the Northern Zone and 19.40 cents in the Southern Zone, it is stated.

Any person desiring to be heard or to make any protest with reference to said application should on or before August 22, 1980, file with the Federal Energy Regulatory Commission, Washington, D.C. 20426, a petition to intervene or a protest in accordance with the requirements of the Commission's Rules of Practice and Procedure (18 CFR 1.8 or 1.10) and the Regulations under the Natural Gas Act (18 CFR 157.10). All protests filed with the Commission will be considered by it in determining the appropriate action to be taken but will not serve to make the protestants parties to the proceeding. Any person wishing to become a party to a proceeding or to participate as a party in any hearing therein must file a petition to intervene in accordance with the Commission's Rules.

Take further notice that, pursuant to the authority contained in and subject to jurisdiction conferred upon the Federal Energy Regulatory Commission by Sections 7 and 15 of the Natural Gas Act and the Commission's Rules of Practice and Procedure, a hearing will be held without further notice before the Commission or its designee on this application if no petition to intervene is filed within the time required herein, if the Commission on its own review of the matter finds that a grant of the certificate is required by the public convenience and necessity. If a petition for leave to intervene is timely filed, or if the Commission on its own motion believes that a formal hearing is required, further notice of such hearing will be duly given.

Under the procedure herein provided for, unless otherwise advised, it will be unnecessary for Applicant to appear or be represented at the hearing.

Kenneth F. Plumb,

Secretary.

[FR Doc. 80-23726 Filed 8-5-80; 8:45 am]

BILLING CODE 6450-85-M

[Docket No. ER80-537]

Virginia Electric & Power Co.; Notice of Filing

July 30, 1980.

The filing Company submits the following:

Take notice that on July 21, 1980, Virginia Electric and Power Company (VEPCO) tendered for filing a Contract Supplement dated June 6, 1980 to the Rate Contract between VEPCO and the Central Virginia Electric Cooperative.

Said Supplement requests the Commission's authorization for connection of a new delivery point designated as Trevilians Delivery Point, located in Louisa County, Virginia.

VEPCO requests an effective date for the new delivery point of June 11, 1980, the date of connection of the new facilities.

Any person desiring to be heard or to make any protests with reference to said application should on or before August 18, 1980, file with the Federal Energy Regulatory Commission, Washington, D.C. 20426, petitions to intervene or protests in accordance with the requirements of the Commission's Rules of Practice and Procedure (18 CFR 1.8 or 1.10). All protests filed with the Commission will be considered by it in determining the appropriate action to be taken but will not serve to make the protestants parties to the proceeding. Persons wishing to become parties to a proceeding or to participate as a party in any hearing therein must file petitions to intervene in accordance with the Commission's Rules. The application is on file with the Commission and is available for public inspection.

Kenneth F. Plumb,

Secretary.

[FR Doc. 80-23706 Filed 8-5-80; 8:45 am]

BILLING CODE 6450-85-M

[Volume 246]

Determinations by Jurisdictional Agencies Under the Natural Gas Policy Act of 1978

Issued July 30, 1980.

The Federal Energy Regulatory Commission received notices of determination from the jurisdictional agencies listed herein, for the indicated wells, pursuant to the Natural Gas Policy Act of 1978 and 18 CFR 274.104. Negative determinations are indicated by a (D) in the DEN column. Estimated annual production is in million cubic feet (MMcf).

The applications for determination in these proceedings together with a copy or description of other materials in the record on which such determinations were made are available for inspection, except to the extent such material is treated as confidential under 18 CFR 275.206, at the Commission's Office of Public Information, Room 1000, 825 North Capitol Street, N.E., Washington, D.C. 20426.

Persons objecting to any of these final determinations may, in accordance with 18 CFR 275.203 and 18 CFR 275.204, file a protest with the Commission within fifteen (15) days of the date of publication of this notice in the Federal Register.

Please reference the FERC Control Number in all correspondence related to these determinations.

Kenneth F. Plumb,

Secretary.

BILLING CODE 6450-85-M

VOLUME 246 PAGE 001

JD NO	JA DKT	API NO	SEC	WELL NAME	FIELD NAME	PROD	PURCHASER
OKLAHOMA CORPORATION COMMISSION							
*AL MCCORD INC				RECEIVED: 07/03/80 JA: OK			
8044576	04439	3509321676	103	EMMONS #1-19	MENO-RINGWOOD	48.0	PIONEER GAS PRODUCTS
*ANDOVER OIL COMPANY				RECEIVED: 07/03/80 JA: OK			
8044580	04412	3501721178	103	MILLER #30-1	WILDCAT	180.0	DELHI GAS PIPELINE C
*BEARD OIL COMPANY				RECEIVED: 07/03/80 JA: OK			
8044582	04417	3510920351	102	BULLA #1	CHOCTAW	100.0	OKLAHOMA NATURAL GAS
*CHAMPLIN PETROLEUM COMPANY				RECEIVED: 07/03/80 JA: OK			
8044579	03795	3510900000	108	VAN BIBBER NO 1-A	WEST EDMOND	0.0	CHAMPLIN PETROLEUM C
*CHASE EXPLORATION CORP				RECEIVED: 07/03/80 JA: OK			
*8044583	04421	3507121500	103	WOOD #2-6	NEVA	10.9	CITIES SERVICE GAS C
*CITIES SERVICE COMPANY				RECEIVED: 07/03/80 JA: OK			
8044559	04396	3506120233	102	JANEWAY B #1	NORTH RUSSELLVILLE	74.0	ARKANSAS LOUISIANA G
*COSTON ENERGY INC				RECEIVED: 07/03/80 JA: OK			
8044593	04261	3510521149	103	FRANK YELTON #1	DELAWARE CHILDRESS	3.7	PRODUCTION OIL CORP
8044595	04264	3510521150	103	FRANK YELTON #2	DELAWARE CHILDRESS	7.0	PRODUCTION OIL CORP
8044594	04262	3510521223	103	LOAFMAN #1	DELAWARE CHILDRESS	1.2	PRODUCTION OIL CORP
8044596	04263	3510521224	103	LOAFMAN #2	DELAWARE CHILDRESS	4.0	PRODUCTION OIL CORP
8044592	04255	3510520871	103	MCCLURE #1	DELAWARE CHILDRESS	72.0	PRODUCTION OIL CORP
8044588	04257	3510521227	103	R W YELTON #1	DELAWARE CHILDRESS	3.0	PRODUCTION OIL CORP
8044591	04259	3510521226	103	R W YELTON #2	DELAWARE CHILDRESS	3.0	PRODUCTION OIL CORP
8044590	04260	3510521120	103	STRITZKE #1	DELAWARE CHILDRESS	9.0	PRODUCTION OIL CORP
8044589	04256	3510522145	103	VERNON MCCLURE #1	DELAWARE CHILDRESS	40.0	PRODUCTION OIL CORP
*DAVID E GROSE JR				RECEIVED: 07/03/80 JA: OK			
*8044552	04381	3507100000	103	GIBSON #1	KEESNER SAND	45.0	CHASE EXPLORATION CO
*8044557	04389	3507100000	103	GROSE #1	NEVA	0.0	CHASE EXPLORATION CO
*8044556	04388	3507100000	103	GROSE #2	NEVA	0.0	CHASE EXPLORATION CO
*8044549	04382	3507100000	103	GROSE #3	NEVA	0.0	CHASE EXPLORATION CO
*8044561	04383	3507100000	103	GROSE #4	NEVA	0.0	CHASE EXPLORATION CO
*8044570	04386	3507100000	103	GROSE #5	NEVA	0.0	CHASE EXPLORATION CO
*8044571	04385	3507100000	103	GROSE #6	NEVA	0.0	CHASE EXPLORATION CO
*8044558	04387	3507100000	103	GROSE #7	NEVA	0.0	CHASE EXPLORATION CO
*8044572	04384	3507100000	103	GROSE #8	NEVA	0.0	CHASE EXPLORATION CO
*DAVIS OIL COMPANY				RECEIVED: 07/03/80 JA: OK			
8044565	03941	3504520610	103	DUGGER #1	MOCANE-LAVERNE	800.0	DELHI GAS PIPELINE C
8044564	03942	3504520674	103	MCDONALD #1	MORROW	88.0	DELHI GAS PIPELINE C
*DOAK OIL INC				RECEIVED: 07/03/80 JA: OK			
8044585	03774	3513120551	102	PLUMER NO 1	ARBUCKLE LIME	110.0	DIAMOND S GAS SYSTEM
*GEODYNE RESOURCES INC				RECEIVED: 07/03/80 JA: OK			
8044575	04484	3507322227	103	ANDERSON NO 24-1	CASHION NORTH	73.0	CONOCO INC
*GREAT WESTERN DRILLING COMPANY				RECEIVED: 07/03/80 JA: OK			
*8044562	01134	3509300000	108	BUEHS #2	RINGWOOD	3.6	PIONEER GAS PRODUCTS
*HARPER OIL COMPANY				RECEIVED: 07/03/80 JA: OK			
*8044587	04483	3510900000	108	ALDEN #1	BLUTCHER	10.0	CITIES SERVICE GAS C
*8044586	04482	3510900000	108	JULIUS A-1	NE EDMOND	14.0	CITIES SERVICE GAS C
8044560	04233	3509300000	102	LAMUNYON #1	N ORION	62.0	PHILLIPS PETROLEUM C
*KAISER-FRANCIS OIL COMPANY				RECEIVED: 07/03/80 JA: OK			
8044597	04427	3505120745	103	HOWARD #1	N W CALUMET	365.0	ARKANSAS LOUISIANA G
8044563	03949	3501520800	103	WATSON #1	E BINGER	912.0	ARKANSAS-LOUISIANA G
*LAGUNA PETROLEUM CO				RECEIVED: 07/03/80 JA: OK			
8044554	04391	3504721799	103	DALKE NO 1	MISSISSIPPI	0.0	ARKANSAS LOUISIANA G

VOLUME 246 PAGE 002

JO NO	JA DKT	API NO	SEC	WELL NAME	FIELD NAME	PROD	PURCHASER
8044555	04390	3504721802	103	SCHWEAR NO 1	VIOLA	0,0	ARKANSAS LOUISIANA G
*MACKELLAR INC				RECEIVED: 07/03/80 JA: OK			
8044551	04379	3510520860	103	OLIVIA #1	NORTH LUCIEN	36,0	ARCO OIL & GAS CO
*MARLIN OIL CORPORATION				RECEIVED: 07/03/80 JA: OK			
8044567	04244	3500721722	103	MARLIN ET AL NO 1 EVERETT	MOCANE-LAVERNE	275,0	COLORADO INTERSTATE
*MAY PETROLEUM INC				RECEIVED: 07/03/80 JA: OK			
*8044574	04485	3504320964	103	CHAPMAN #1 (043-56513)	NORTH OAKWOOD	292,0	DELHI GAS PIPE LINE
*MUSTANG PRODUCTION CO,				RECEIVED: 07/03/80 JA: OK			
8044577	04455	3501120758	103	ROACH #1-26	ELM GROVE	200,0	OKLAHOMA GAS & ELECT
8044578	04456	3501120844	103	WILLIAMS #1-32	SQUAW CREEK	700,0	OKLAHOMA GAS & ELECT
*OKLAHOMA PLAINS PETROLEUM INC				RECEIVED: 07/03/80 JA: OK			
8044581	04413	3509321642	103	HOBSON 22-2	RINGWOOD	0,0	PIONEER GAS PRODUCTS
*PATRICK & VAUGHN				RECEIVED: 07/03/80 JA: OK			
8044568	04275	3500700000	108	OKLAHOMA STATE #1 007 32419	PORGAN	10,0	PANHANDLE EASTERN PI
*R & N ASSOCIATES - C M NEUBERT AGT				RECEIVED: 07/03/80 JA: OK			
8044584	04434	3508300000	108	D HARMAN NO 1	CASHION	17,0	SNAB CORP
*RICKS EXPLORATION CO				RECEIVED: 07/03/80 JA: OK			
8044548	03978	3515120951	103	VAN METER-DIMMICK 20A	DACOMA	350,0	PANHANDLE EASTERN PI
8044573	03979	3515120950	103	ZAHORSKY 88	DACOMA	400,0	PANHANDLE EASTERN PI
*SAMSON RESOURCES COMPANY				RECEIVED: 07/03/80 JA: OK			
8044598	00251	3502920164	103	MCKINNEY NO 1 - LOWER	CENTRAHOMA	26,7	ARKANSAS LOUISIANA G
*SOVEREIGN EXPLORATION CO				RECEIVED: 07/03/80 JA: OK			
8044553	04380	3515120923	103	SOVEREIGN #1 BUCKLAND	CHESTER	80,0	DELHI GAS PIPELINE C
*TEXACO INC				RECEIVED: 07/03/80 JA: OK			
8044566	03963	3501921716	103	BISCO UNIT #2	HEWITT EAST	1,1	CITIES SERVICE GAS C
*W M & A P FULLER				RECEIVED: 07/03/80 JA: OK			
8044569	03743	3504721852	103	FENTON TALBOTT NO 1	NORTHEAST WAUKOMIS	183,0	PANHANDLE EASTERN PI
*WORLDWIDE ENERGY CORPORATION				RECEIVED: 07/03/80 JA: OK			
8044550	07391	3500720568	108	CHABTREE ESTATE #1	MOCANE-LAVERNE	15,0	PANHANDLE EASTERN PI

****

WEST VIRGINIA DEPARTMENT OF MINES

****

*AIGT CORP				RECEIVED: 07/01/80 JA: WV			
8044496		4708504673	108	RITCHIE MINES #30	RITCHIE MINES LEASE	7,3	CONSOLIDATED GAS SUP
*BOWSER GAS & OIL COMPANY				RECEIVED: 07/01/80 JA: WV			
*8044365		4708504611	108	CONNULLY HEIRS #1	MURPHY DISTRICT	2,0	CONSOLIDATED GAS SUP
*8044343		4701303116	108	FRANK & IDA JOHNSON #1	CENTER DISTRICT	1,5	CONSOLIDATED GAS SUP
*8044347		4701303111	108	FRANK JOHNSON #1	CENTER DISTRICT	1,5	CONSOLIDATED GAS SUP
*8044360		4701300886	108	GAY (OR L B) WILSON #1	CENTER DISTRICT	2,8	CONSOLIDATED GAS SUP
*8044349		4701303108	108	H M BENNETT #2	CENTER DISTRICT	0,8	CONSOLIDATED GAS SUP
*8044336		4701303107	108	H M BENNETT #3	CENTER DISTRICT	3,1	CONSOLIDATED GAS SUP
*8044346		4701303113	108	IDA JOHNSON #1	CENTER DISTRICT	1,4	CONSOLIDATED GAS SUP
*8044283		4701303078	108	J C HAYHURST #3	CENTER DISTRICT	1,6	CONSOLIDATED GAS SUP
*8044293		4701303080	108	J F WILSON #1	CENTER DISTRICT	1,6	CONSOLIDATED GAS SUP
*8044390		4710303075	108	J W HULBERT #1	CENTER DISTRICT	2,6	CONSOLIDATED GAS SUP
*8044366		4708504583	108	JOHN HYMAN #1	MURPHY DISTRICT	2,2	CONSOLIDATED GAS SUP
*8044368		4702103607	108	L A HARDMAN #1	DEKALB	1,1	CONSOLIDATED GAS SUP
*8044369		4702103605	108	L A HARDMAN #3	DEKALB DISTRICT	2,5	CONSOLIDATED GAS SUP
*8044339		4702103603	108	L A HARDMAN #5	DEKALB DISTRICT	4,7	CONSOLIDATED GAS SUP
*8044345		4701303114	108	M A WILSON #2	CENTER DISTRICT	0,2	CONSOLIDATED GAS SUP
*8044344		4701303115	108	M A WILSON #5	CENTER DISTRICT	0,4	CONSOLIDATED GAS SUP
*8044359		4701303104	108	MALINDA C RICHARDS #9	CENTER DISTRICT	0,1	CONSOLIDATED GAS SUP
*8044367		4702103606	108	O C & T C MCNUAIN #1	DEKALB DISTRICT	0,8	CONSOLIDATED GAS SUP

VOLUME 246 PAGE 003

JD NO	JA DKT	API NO	SEC #	WELL NAME	FIELD NAME	PROD	PURCHASER
*8044370		4702103604	108	D C & T C MCQUAIN #3	DEKALB DISTRICT	1.9	CONSOLIDATED GAS SUP
*8044282		4701303079	108	H P WILSON #1	CENTER DISTRICT	0.9	CONSOLIDATED GAS SUP
*8044389		4701303071	108	H P WILSON #2	CENTER DISTRICT	0.9	CONSOLIDATED GAS SUP
*8044340		4702103602	108	RICHARDS-MCQUAIN #1	DEKALB DISTRICT	3.4	CONSOLIDATED GAS SUP
*8044361		4702100372	108	ROBERT MITCHELL #6	DEKALB DISTRICT	0.3	PENNZOIL CO
*8044341		4701303118	108	ROSA L NORMAN #3	CENTER DISTRICT	0.1	CONSOLIDATED GAS SUP
*8044348		4701303109	108	ROSA L NORMAN #5	CENTER DISTRICT	0.6	CONSOLIDATED GAS SUP
*8044363		4708504615	108	T J IRELAND #1	MURPHY DISTRICT	3.3	CONSOLIDATED GAS SUP
*8044342		4701303117	108	T J JACKSON #1	CENTER DISTRICT	1.5	CONSOLIDATED GAS SUP
*8044362		4708504613	108	T J PARKS #3	MURPHY DISTRICT	0.5	CONSOLIDATED GAS SUP
*8044364		4708504612	108	T J PARKS #4	MURPHY DISTRICT	1.3	CONSOLIDATED GAS SUP
*8044353		4701300047	108	W H JACKSON #3	CENTER DISTRICT	0.3	CONSOLIDATED GAS SUP
*8044352		4701300053	108	W H JACKSON #4	CENTER DISTRICT	0.3	CONSOLIDATED GAS SUP
*8044337		4701300057	108	W H JACKSON #5	CENTER DISTRICT	0.3	CONSOLIDATED GAS SUP
*8044338		4701303105	108	W L CAMDEN #1	CENTER DISTRICT	2.2	CONSOLIDATED GAS SUP
*8044284		4701303077	108	W W KNIGHT #7	CENTER DISTRICT	1.1	CONSOLIDATED GAS SUP
*8044391		4701303076	108	WILLIAM KIGHT #1	SHERMAN DISTRICT	1.0	CONSOLIDATED GAS SUP
*8044292		4708545840	108	ZICKEFUUSE #1	MURPHY DISTRICT	2.6	CONSOLIDATED GAS SUP
*CAMERON OIL & GAS COMPANY				RECEIVED: 07/01/80 JA: MV			
8044384		4700501295	108	GEORGE P ALDERSON #11	SCOTT DISTRICT	11.6	COLUMBIA GAS TRANSMI
8044275		4700501298	108	GEORGE P ALDERSON #9	SCOTT DISTRICT	11.6	COLUMBIA GAS TRANSMI
8044379		4704301297	108	GOLDEN STONE #3	HORSE CREEK	5.9	COLUMBIA GAS TRANSMI
8044276		4704301296	108	GOLDEN STONE #4	JEFFERSON DISTRICT	5.9	COLUMBIA GAS TRANSMI
8044414		4700501280	108	SHOOT #1	SHOOT #1	14.1	CONSOLIDATED GAS SUP
*CUMBERLAND GAS COMPANY				RECEIVED: 07/01/80 JA: MV			
8044382		4704302406	108	E L ADKINS #BR-28	UNION	0.2	COLUMBIA GAS TRANSMI
8044381		4704302405	108	G T RAY #BR-23	CARROLL	0.7	COLUMBIA GAS TRANSMI
8044383		4704302407	108	G T RAY #BR-26	CARROLL	0.7	COLUMBIA GAS TRANSMI
8044380		4704302404	108	HORSE CREEK LAND & MINING #BR-66	UNION	0.9	COLUMBIA GAS TRANSMI
8044388		4704302403	108	J L POWELL #BR-12	CARROLL	1.0	COLUMBIA GAS TRANSMI
8044373		4704302402	108	W G ADKINS #BR-4	SHERIDAN	3.8	COLUMBIA GAS TRANS C
*FRANCIS E CAIN				RECEIVED: 07/01/80 JA: MV			
8044415		4701303026	108	B B FERRELL #6	SHERIDAN	7.8	CABOT CORP
8044505		4701303123	108	BURTON DESPARD HEIRS #5	CENTER DISTRICT	4.7	CONSOLIDATED GAS SUP
8044506		4701303126	108	C J THOMAS #1	SHERIDAN	3.0	CABOT CORP
8044508		4701303125	108	H M BUCKLEY #1	SHERMAN	0.0	CABOT CORP
8044507		4701303124	108	IRA HAVERTY #1	CENTER	3.2	CABOT CORP
*GRACE PETROLEUM CORPORATION				RECEIVED: 07/01/80 JA: MV			
8044432		4701302390	108	ELLIOTT #1	SHERIDAN	3.0	CONSOLIDATED GAS SUP
*HUNTINGTON OKLA/HIDWAY CITY GAS CO				RECEIVED: 07/01/80 JA: MV			
8044376		4709900000	108	BREWER #2	MANABONE	5.0	COLUMBIA GAS TRANSMI
*J W STONE				RECEIVED: 07/01/80 JA: MV			
8044386		4708700925	108	J W FERRELL WELL #1	LOUNEYVILLE GAS FIELD	4.5	COLUMBIA GAS TRANSMI
*LENORE DEEM				RECEIVED: 07/01/80 JA: MV			
8044280		4708523511	108	CAPITOL #1	MURPHY DISTRICT	5.0	CONSOLIDATED GAS SUP
*LONETREE OIL CO				RECEIVED: 07/01/80 JA: MV			
8044385		4709500786	108	MARK FARRELL FARM NO 1	ELLSWORTH DISTRICT	8.0	CONSOLIDATED GAS SUP
*MASSA OIL CO				RECEIVED: 07/01/80 JA: MV			
8044377		4708703255	108	G W SMITH WELL #5	CLOVER OIL FIELD	0.9	COLUMBIA GAS TRANSMI
*MOBBOR OIL & GAS COMPANY				RECEIVED: 07/01/80 JA: MV			
8044395		4708524588	108	DRY RUN #1	MURPHY DISTRICT	1.2	CONSOLIDATED GAS SUP
*N G & DELTA BUSCH				RECEIVED: 07/01/80 JA: MV			
8044351		4710506011	108	NEWTON KEMP NO 1	BURNING SPRINGS DISTRICT	0.5	CONSOLIDATED GAS SUP

VOLUME 246 PAGE 004

JD NO	JA OKT	API NU	SEC	WELL NAME	FIELD NAME	PROD	PURCHASER
*NEW BIG CREEK GAS CO				RECEIVED: 07/01/80 JA: WV			
8044266		4704501041	108	NEW BIG CREEK GAS CO #2	GUYAN DISTRICT	10.2	PENNZOIL CO
*OKMAR OIL COMPANY				RECEIVED: 07/01/80 JA: WV			
8044301		4701323098	108	A H FLING #3	SHERIDAN DISTRICT	0.7	CONSOLIDATED GAS SUP
8044311		4701323083	108	A H JACKSON #1	SHERIDAN DISTRICT	0.7	CONSOLIDATED GAS SUP
8044297		4701323082	108	A T YOAK #1	SHERIDAN DISTRICT	1.2	CONSOLIDATED GAS SUP
8044413		4701323025	108	BENNETT #10	SHERIDAN DISTRICT	1.1	CONSOLIDATED GAS SUP
8044307		4701323088	108	BENNETT SAUNDERS #1	SHERIDAN DISTRICT	1.1	CONSOLIDATED GAS SUP
8044308		4701323087	108	C J THOMAS #1	CENTER DISTRICT	0.7	CONSOLIDATED GAS SUP
8044302		4701323096	108	D M MILLER #1	SHERIDAN DISTRICT	1.1	CONSOLIDATED GAS SUP
8044300		4701323099	108	F M DEPUE #3	CENTER DISTRICT	0.7	CONSOLIDATED GAS SUP
8044306		4701323089	108	HOLBERT-PELL #1	SHERIDAN DISTRICT	0.7	CONSOLIDATED GAS SUP
8044305		4701323090	108	JAMES METZ #10	CENTER DISTRICT	0.7	CONSOLIDATED GAS SUP
8044304		4701323091	108	JAMES METZ #6	CENTER DISTRICT	0.7	CONSOLIDATED GAS SUP
8044287		4701323097	108	M J WEBB #1 (INJUN)	SHERIDAN DISTRICT	0.9	CABOT CORP
8044309		4701323085	108	M J WEBB #1 (BEREA)	SHERIDAN DISTRICT	0.7	CONSOLIDATED GAS SUP
8044298		4701323081	108	OPHIA & SUSAN TAYLOR #3	CENTER DISTRICT	0.7	CONSOLIDATED GAS SUP
8044289		4701323094	108	PELL HEIRS #1	SHERIDAN DISTRICT	1.5	CABOT CORP
8044288		4701323093	108	T C CAIN #1	SHERIDAN DISTRICT	1.5	CABOT CORP
8044303		4701323092	108	TASRIL TAYLOR #4	CENTER DISTRICT	0.7	CONSOLIDATED GAS SUP
8044310		4701323084	108	YOAK & FLUHARTY #2	SHERIDAN DISTRICT	1.3	CONSOLIDATED GAS SUP
*PALED INC				RECEIVED: 07/01/80 JA: WV			
8044493		4700700896	108	ADRIAN TOMS #2	SALT LICK	10.5	CONSOLIDATED GAS SUP
8044533		4700700946	108	AUDRA TAYLOR #1	SALT LICK	8.6	CONSOLIDATED GAS SUP
8044545		4702102194	108	BEESON #1	TROY	2.8	CARNEGIE NATURAL GAS
8044541		4702102756	108	BENNETT I-365	CENTER	0.3	CONSOLIDATED GAS SUP
8044542		4702102770	108	BOGGS I-396	CENTER	1.4	CONSOLIDATED GAS SUP
8044538		4700701208	108	BRAXTON MOTORS I-368	OTTER	6.8	CONSOLIDATED GAS SUP
8044537		4700704169	108	BRAXTON MOTORS I-369	OTTER	3.4	CONSOLIDATED GAS SUP
8044495		4700700914	108	CAMPER #1	OTTER	4.6	EQUITABLE GAS CO
8044492		4700700887	108	CARRIE MOYERS #1	SALT LICK	7.1	CONSOLIDATED GAS SUP
8044534		4700700948	108	CARRIE MOYERS #2	SALT LICK	6.5	CONSOLIDATED GAS SUP
8044532		4700701945	108	CARRIE POSEY #1	SALT LICK	5.1	CONSOLIDATED GAS SUP
8044547		4700700867	108	DORA POST #1	ARNETTE AREA	4.0	CONSOLIDATED GAS SUP
8044546		4700700636	108	DORA POST #2	ARNETTE AREA	3.6	CONSOLIDATED GAS SUP
8044540		4702102629	108	ELLIS HEATER #1	GLENVILLE	10.2	CONSOLIDATED GAS SUP
8044531		4700700941	108	L E WINE #1	SALT LICK	6.1	CONSOLIDATED GAS SUP
8044494		4700700899	108	LESTER EDWARDS #1	SALT LICK	9.8	CONSOLIDATED GAS SUP
8044536		4700701040	108	MARSHALL #2	COPEN RUN	7.3	CONSOLIDATED GAS SUP
8044544		4702102896	108	MEADOWS I-395	CENTER	21.5	CONSOLIDATED GAS SUP
8044535		4700701025	108	POST HEIRS #1	COPEN RUN	1.5	CONSOLIDATED GAS SUP
8044539		4701302561	108	SYLVESTER STUMP I-392	SHERMAN	8.5	CONSOLIDATED GAS SUP
8044543		4702122893	108	W G BENNETT I-306	CENTER	12.7	CONSOLIDATED GAS SUP
*PALMER HILL				RECEIVED: 07/01/80 JA: WV			
8044503		4708502316	108	B H DENNING #1	HARRISVILLE AREA	1.0	CONSUMERS GAS UTILIT
8044499		4708504688	108	FENREBEE HEIRS #1	PENNSBORO AREA	2.2	CARNEGIA NATURAL GAS
8044500		4708504677	108	LEONARD #2	HARRISVILLE AREA	1.5	CONSUMERS GAS UTILIT
8044501		4708500406	108	LEONARD #3	HARRISVILLE AREA	1.5	CONSUMERS GAS UTILIT
8044502		4708500556	108	LEONARD #4	HARRISVILLE AREA	1.5	CONSUMERS GAS UTILIT
8044504		4708504691	108	STRICKLER-MCGINNIS #2	HARRISVILLE AREA	1.5	CONSUMERS GAS UTILIT
*PENNZOIL COMPANY				RECEIVED: 07/01/80 JA: WV			
8044350		4708703257	108	A B CALDWELL #1	GEARY	11.0	CONSOLIDATED GAS SUP
8044354		4710500391	108	L R ROBERTS #7	BURNING SPRINGS DISTRICT	1.5	CONSOLIDATED GAS SUP
8044357		4708703262	108	O D STUCKLEY #66	GEARY	0.0	CONSOLIDATED GAS SUP

VOLUME 246 PAGE 005

JD NO	JA DKT	API NO	SEC	WELL NAME	FIELD NAME	PROD	PURCHASER
8044356		4708703263	108	O D STUCKLEY #69	GEARY	0,0	CONSOLIDATED GAS SUP
8044355		4708703264	108	O D STUCKLEY #71	GEARY	0,0	CONSOLIDATED GAS SUP
8044358		4708703259	108	W D COMBS #1	SMITHFIELD	0,0	CONSOLIDATED GAS SUP
*RAY RESOURCES DIV OF FLYING DIAMOND				RECEIVED: 07/01/80 JA: WV			
8044411		4703903543	108	FALLING ROCK #152 - (56)	BIG SANDY	3,5	PENZOIL UNITED INC
8044406		4703903538	108	FALLING ROCK #157 - (58)	BIG SANDY	3,5	PENZOIL UNITED INC
8044407		4703903537	108	FALLING ROCK #157 - (79)	BIG SANDY	3,5	PENZOIL UNITED INC
8044409		4703903535	108	FALLING ROCK #157 - (96)	BIG SANDY	3,5	PENZOIL UNITED INC
8044410		4703903534	108	FALLING ROCK #157 - (97)	BIG SANDY	3,5	PENZOIL UNITED INC
8044408		4703903536	108	FALLING ROCK #157 - (98)	BIG SANDY	3,5	PENZOIL UNITED INC
8044405		4703903539	108	FALLING ROCK #157-(57)	BIG SANDY	3,5	PENZOIL UNITED INC
*HAYBUCK & HARRIS GAS CO				RECEIVED: 07/01/80 JA: WV			
8044392		4701303103	108	HAYBUCK & HARRIS NO 1	SHERMAN DISTRICT	1,4	CONSOLIDATED GAS SUP
*RIVERHEAD GAS CO				RECEIVED: 07/01/80 JA: WV			
8044510		4700500048	108	NELSON #2 GPA 1274	MUD RIVER	8,1	PENNZOIL CO
8044511		4700500088	108	NELSON #3 GPA 1274	MUD RIVER	8,1	PENNZOIL CO
8044512		4700500089	108	NELSON #4 GPA 1274	MUD RIVER	8,1	PENNZOIL CO
8044513		4700500149	108	NELSON #6 GPA 1274	MUD RIVER	1,0	PENNZOIL CO
*ROY G HILDRETH ET AL				RECEIVED: 07/01/80 JA: WV			
8044371		4701303102	108	SLIDER GAS CO #1	LEE DISTRICT	5,7	CONSOLIDATED GAS SUP
*S K & J M BARTLETT				RECEIVED: 07/01/80 JA: WV			
8044299		4703903563	108	DAVID WARD #2462	CABIN CREEK	3,6	COLUMBIA GAS TRANSMI
8044271		4703903567	108	DAVID WARD 2447	CABIN CREEK	3,6	COLUMBIA GAS TRANSMI
8044273		4703903566	108	SUNDAY CREEK COAL CO #1065	CABIN CREEK	3,6	COLUMBIA GAS TRANSMI
8044274		4703903565	108	SUNDAY CREEK COAL CO #1071	CABIN CREEK	3,6	COLUMBIA GAS TRANSMI
8044291		4703903559	108	SUNDAY CREEK COAL CO #1135	CABIN CREEK	3,6	COLUMBIA GAS TRANSMI
8044265		4703903564	108	SUNDAY CREEK COAL CO #689	CABIN CREEK	3,6	COLUMBIA GAS TRANSMI
8044290		4703903560	108	THOMAS BURKE #5 PRESTON OIL #1717	CABIN CREEK	3,6	COLUMBIA GAS TRANSMI
8044286		4703903562	108	W H THOMAS #1711	CABIN CREEK	3,6	COLUMBIA GAS TRANSMI
*SIMERS OIL & GAS CO				RECEIVED: 07/01/80 JA: WV			
8044378		4702103598	108	SIMERS OIL & GAS CO #0795 WELL #1	DEKALB DISTRICT	15,1	HOPE NATURAL GAS CO
*SOUTHEASTERN GAS COMPANY				RECEIVED: 07/01/80 JA: WV			
*8044529		4701100624	108	A A SHAHN #P-65	GRANT	0,8	COLUMBIA GAS TRANSMI
8044515		4700501282	108	A G HAGER #673	SCOTT	1,2	SOUTHERN PUBLIC SERV
*8044524		4701100619	108	A G JOHNSON #Z-15	GRANT	2,4	COLUMBIA GAS TRANSMI
*8044467		4707900949	108	A J ASHWORTH #R-6	CURRY	2,3	COLUMBIA GAS TRANSMI
*8044482		4704302384	108	A M SPURLOCK #U-2	DUVAL	1,0	COLUMBIA GAS TRANSMI
*8044458		4701100647	108	A R CONNER #Z-16	GRANT	1,0	COLUMBIA GAS TRANSMI
*8044528		4701100623	108	A V MCCULLOUGH #P-74	GRANT	0,8	COLUMBIA GAS TRANSMI
*8044462		4701100643	108	ADDISON CONNER #Z-12	GRANT	0,8	COLUMBIA GAS TRANSMI
*8044314		4701303069	108	ARCHIBALD SHUCK #604	SHERMAN	2,1	CONSOLIDATED GAS SUP
*8044313		4701303068	108	ARCHIBALD SHUCK #605	SHERMAN	2,1	CONSOLIDATED GAS SUP
*8044450		4701106560	108	AUGUSTA CHANEY #P-39	GRANT	0,8	COLUMBIA GAS TRANSMI
*8044470		4701100667	108	AUGUSTA CHANEY #P-9	GRANT	0,8	COLUMBIA GAS TRANSMI
8044448		4701501743	108	B H SAMPLES #A-22	UNION	3,3	CONSOLIDATED GAS SUP
8044433		4701100628	108	BERTHA JACKSON #P-59	GRANT	1,2	COLUMBIA GAS TRANSMI
*8044268		4700501294	108	BREEDLOVE HEIRS #712	SCOTT	2,9	PENNZOIL CO
*8044295		4704302388	108	C H RICHMOND ET AL #163	UNION	1,8	PENNZOIL CO
*8044489		4707900951	108	CALIHAN GRASS #R-1	CURRY	4,9	COLUMBIA GAS TRANSMI
*8044469		4701100668	108	CIDDIE JOHNSON #Z-9	GRANT	0,8	COLUMBIA GAS TRANSMI
8044420		4701500000	108	COAL & COKE RAILWAY #A-18	UNION	3,3	CONSOLIDATED GAS SUP
8044421		4701501746	108	COAL & COKE RAILWAY #A-23	UNION	3,3	CONSOLIDATED GAS SUP
8044425		4701501751	108	COAL & COKE RAILWAY #A-24	UNION	3,3	CONSOLIDATED GAS SUP

VOLUME 246 PAGE 006

JD NO	JA DKT	API NO	SEC	WELL NAME	FIELD NAME	PROD	PURCHASER
8044435		4701501729	108	D N SCHOUNOVER #T-22	HENRY	3.9	CONSULIDATED GAS SUP
*8044465		4701100640	108	DAVID H AKERS #P-3	GRANT	0.8	COLUMBIA GAS TRANSMI
*8044333		4704302401	108	E G & BERTHA STONE #171	JEFFERSON	1.9	PENNZOIL CO
*8044294		4704302389	108	ED & MATTIE BARRETT #154	DUVAL	7.5	PENNZOIL CO
8044418		4702100000	108	EMMA DELUNG #613	CENTER	0.9	CONSOLIDATED GAS SUP
8044416		4702100000	108	EMMA DELUNG #614	CENTER	0.9	CONSOLIDATED GAS SUP
*8044323		4702103594	108	EMMA DELUNG #616	CENTER	0.9	CONSOLIDATED GAS SUP
*8044483		4704302385	108	EMMA J STOWERS #Q-3	CARROLL	1.0	COLUMBIA GAS TRANSMI
*8044520		4701100614	108	F F MCCULLOUGH #P-29	GRANT	0.8	COLUMBIA GAS TRANSMI
8044272		4700501291	108	F P MURPHY #676	SCOTT	1.5	SOUTHERN PUBLIC SERV
*8044461		4701100644	108	FREEMAN NELSON #P-42	GRANT	0.8	COLUMBIA GAS TRANSMI
*8044459		4701100646	108	G A RODGERS #Z-18	GRANT	8.1	COLUMBIA GAS TRANSMI
*8044525		4701100618	108	G H HATFIELD #P-57	GRANT	0.8	COLUMBIA GAS TRANSMI
8044436		4701501730	108	G W BUTCHER #T-12	HENRY	1.9	CONSOLIDATED GAS SUP
*8044463		4701100642	108	GERMAN CHAPMAN #Z-10	GRANT	0.8	COLUMBIA GAS TRANSMI
8044440		4701501735	108	H E SHADLE #T-11	HENRY	4.6	CONSOLIDATED GAS SUP
*8044320		4701501766	108	H E SHADLE #T-13	HENRY	1.7	CONSOLIDATED GAS SUP
*8044477		4701100660	108	H HATFIELD #P-47	GRANT	0.8	COLUMBIA GAS TRANSMI
*8044312		4707900955	108	H J MILLER #741	CURRY	3.5	PENNZOIL CO
*8044523		4701100617	108	HENRY GERLACH #P-13	GRANT	0.8	COLUMBIA GAS TRANSMI
*8044478		4701100659	108	HENRY GERLACH #P-46	GRANT	1.0	COLUMBIA GAS TRANSMI
*8044475		4701100662	108	HENRY GERLACH #P-56	GRANT	0.8	COLUMBIA GAS TRANSMI
*8044457		4701100648	108	HENRY STONE #P-71	GRANT	4.8	COLUMBIA GAS TRANSMI
*8044451		4701106550	108	HUBERT HATFIELD #Z-19	GRANT	4.6	COLUMBIA GAS TRANSMI
*8044331		4704302398	108	I J BIAS ET UX #3	SHERIDAN	3.0	PENNZOIL CO
*8044319		4701501765	108	IDA CALDWELL #T-14	HENRY	0.6	CONSOLIDATED GAS SUP
8044439		4701501734	108	IDA CALDWELL #T-20	HENRY	2.7	CONSOLIDATED GAS SUP
*8044267		4704300213	108	IRA BURGER ET UX #204	SHERIDAN	2.8	PENNZOIL CO
*8044449		4701106570	108	ISAAC GERLACH #Z-17	GRANT	1.2	COLUMBIA GAS TRANSMI
*8044269		4700501293	108	J C HILL #716	SCOTT	1.1	PENNZOIL CO
*8044519		4701100613	108	J E MCKENY #P-53	GRANT	0.8	COLUMBIA GAS TRANSMI
8044509		4703903553	108	J H HANSFORD #M-12	CABIN CREEK	3.4	SOUTHERN PUBLIC SERV
*8044471		4701100666	108	J H HARSHBARGER #P-61	GRANT	0.8	COLUMBIA GAS TRANSMI
*8044472		4701100665	108	J H HARSHBARGER #P-62	GRANT	0.8	COLUMBIA GAS TRANSMI
*8044466		4701100639	108	J H WILLIAMS #P-6	GRANT	0.8	COLUMBIA GAS TRANSMI
*8044460		4701100645	108	J L BLACKWOOD #P-83	GRANT	0.7	COLUMBIA GAS TRANSMI
8044518		4700501285	108	J M HOPKINS #677	SCOTT	1.6	SOUTHERN PUBLIC SERV
*8044474		4701100663	108	J N WALLACE #P-17	GRANT	0.8	COLUMBIA GAS TRANSMI
*8044468		4701100669	108	J N WALLACE #P-23	GRANT	0.8	COLUMBIA GAS TRANSMI
*8044315		4701303070	108	J R GODFREY #608	SHERMAN	1.3	CONSOLIDATED GAS SUP
8044434		4701303027	108	J R GODFREY #609	SHERMAN	1.3	CONSOLIDATED GAS SUP
*8044488		4707900950	108	J S BURDETTE #H-7	CURRY	7.6	COLUMBIA GAS TRANSMI
8044429		4701501754	108	JACKSON MULLINS #A-31	UNION	3.3	CONSOLIDATED GAS SUP
*8044464		4701100641	108	JAMES CONNER #Z-5	GRANT	0.8	COLUMBIA GAS TRANSMI
8044430		4701501755	108	JAMES REED #A-33	UNION	3.3	CONSOLIDATED GAS SUP
*8044324		4704302392	108	JOHN R MCCALLISTER #Q-6	DUVAL	4.8	PENNZOIL CO
*8044491		4708703253	108	L F SMITH #537	GEARY	0.7	COLUMBIA GAS TRANSMI
*8044490		4708703252	108	L F SMITH #538	GEARY	0.7	COLUMBIA GAS TRANSMI
*8044485		4704302387	108	LEANDER MILLER #Q-5	CARROLL	0.6	COLUMBIA GAS TRANSMI
*8044396		4701106260	108	M W MONAKER #P-63	GRANT	0.8	COLUMBIA GAS TRANSMI
*8044296		4704302382	108	MALINDA MEADOWS ET VIR #196	DUVAL	2.5	PENNZOIL CO
*8044285		4704302391	108	MALINDA MEADOWS ET VIR #197	DUVAL	2.5	PENNZOIL CO
8044516		4700501283	108	MARY JANE MILLER #705	WASHINGTON	0.4	SOUTHERN PUBLIC SERV

VOLUME 246 PAGE 007

JD NO	JA DKT	API NO	SEC #	WELL NAME	FIELD NAME	PROD	PURCHASER
*8044330		4704302397	108	MARY NOEL #8	SHERIDAN	3.2	PENNZOIL CO
8044437		4701501731	108	MATHEWS SCOTT & PRICE #T-19	HENRY	2.9	CONSOLIDATED GAS SUP
*8044530		4701100625	108	MATTIE HAGER #P-64	GRANT	2.0	COLUMBIA GAS TRANSMI
8044446		4701501741	108	MICHAEL CRAIG #A-14	UNION	3.3	CONSOLIDATED GAS SUP
8044447		4701501742	108	MICHAEL CRAIG #A-15	UNION	3.3	CONSOLIDATED GAS SUP
8044419		4701501744	108	MICHAEL CRAIG #A-20	UNION	3.3	CONSOLIDATED GAS SUP
8044427		4701501752	108	MICHAEL CRAIG #A-28	UNION	3.3	CONSOLIDATED GAS SUP
8044428		4701501753	108	MICHAEL CRAIG #A-29	UNION	3.3	CONSOLIDATED GAS SUP
8044404		4703903552	108	MONTGOMERY HEIRS #M-10	CABIN CREEK	5.5	SOUTHERN PUBLIC SERV
8044431		4701501732	108	N P GROSE #T-18	HENRY	3.9	CONSOLIDATED GAS SUP
8044398		4701900429	108	NEW RIVER CO #M-27	KANAWHA	1.3	SOUTHERN PUBLIC SERV
8044403		4701900434	108	NEW RIVER COMPANY #M-13	KANAWHA	1.3	SOUTHERN PUBLIC SERV
8044400		4701900431	108	NEW RIVER COMPANY #M-15	KANAWHA	1.9	SOUTHERN PUBLIC SERV
8044401		4701900432	108	NEW RIVER COMPANY #M-16	KANAWHA	1.9	SOUTHERN PUBLIC SERV
8044399		4701900430	108	NEW RIVER COMPANY #M-22	KANAWHA	1.3	SOUTHERN PUBLIC SERV
*8044453		4701100653	108	NORA HOWES #Z-39	GRANT	0.8	COLUMBIA GAS TRANSMI
*8044526		4701100620	108	ORVILLE CONNER #Z-14	GRANT	1.0	COLUMBIA GAS TRANSMI
*8044397		4701100627	108	OSCAR NELSON #P-72	GRANT	0.8	COLUMBIA GAS TRANSMI
8044422		4701501747	108	P S HART #A-1	UNION	3.3	CONSOLIDATED GAS SUP
8044423		4701501748	108	P S HART #A-2	UNION	3.3	CONSOLIDATED GAS SUP
8044424		4701501749	108	P S HART #A-3	UNION	3.3	CONSOLIDATED GAS SUP
8044426		4701501750	108	P S HART #A-5	UNION	3.3	CONSOLIDATED GAS SUP
*8044326		4704302393	108	PEARL STOWERS ET AL #176	JEFFERSON	5.4	PENNZOIL CO
*8044455		4701100651	108	PRESTON KEATON #Z-4	GRANT	0.8	COLUMBIA GAS TRANSMI
*8044456		4701100650	108	R C KILGORE #Z-35	GRANT	0.8	COLUMBIA GAS TRANSMI
*8044481		4704302383	108	R L STANLEY #U-7	DUVAL	2.2	COLUMBIA GAS TRANSMI
*8044454		4701100652	108	R M HANDLEY #Z-37	GRANT	0.6	COLUMBIA GAS TRANSMI
*8044322		4702103593	108	S A HAYS #617	CENTER	1.0	CONSOLIDATED GAS SUP
*8044321		4702103592	108	S E HINNEY #618	CENTER	0.7	CONSOLIDATED GAS SUP
*8044521		4701100615	108	S J HYMAN #P-31	GRANT	0.8	COLUMBIA GAS TRANSMI
*8044486		4707900988	108	S L DENT #H-9	CURRY	2.3	COLUMBIA GAS TRANSMI
*8044527		4701100622	108	SAMUEL BECKETT #F-6	GRANT	11.9	COLUMBIA GAS TRANSMI
*8044484		4704302386	108	SCOTT LAWSON #U-11	CARROLL	1.5	COLUMBIA GAS TRANSMI
*8044480		4704302381	108	SCOTT LAWSON #U-12	CARROLL	1.5	COLUMBIA GAS TRANSMI
*8044467		4704302380	108	SCOTT LAWSON #U-13	CARROLL	1.5	COLUMBIA GAS TRANSMI
*8044522		4701100616	108	T H DUTY #P-50	GRANT	0.8	COLUMBIA GAS TRANSMI
*8044327		4704302394	108	T M CHANDLER #177	JEFFERSON	6.5	PENNZOIL CO
*8044329		4704302396	108	T M CHANDLER #180	JEFFERSON	6.5	PENNZOIL CO
*8044316		4701501762	108	THOMPSON LAND & COAL #T-10	PLEASANT	3.9	CONSOLIDATED GAS SUP
*8044318		4701501764	108	THOMPSON LAND & COAL #T-16	PLEASANT	3.9	CONSOLIDATED GAS SUP
8044438		4701501738	108	THOMPSON LAND & COAL #T-17	PLEASANT	3.9	CONSOLIDATED GAS SUP
8044441		4701501736	108	THOMPSON LAND & COAL #T-2	PLEASANT	3.9	CONSOLIDATED GAS SUP
8044442		4701501737	108	THOMPSON LAND & COAL #T-4	PLEASANT	3.9	CONSOLIDATED GAS SUP
8044443		4701501738	108	THOMPSON LAND & COAL #T-5	PLEASANT	3.9	CONSOLIDATED GAS SUP
8044444		4701501739	108	THOMPSON LAND & COAL #T-6	PLEASANT	3.9	CONSOLIDATED GAS SUP
*8044317		4701501763	108	THOMPSON LAND & COAL #T-8	PLEASANT	3.9	CONSOLIDATED GAS SUP
*8044332		4704302400	108	V J & LEE BANSON #15	SHERIDAN	2.9	PENNZOIL CO
8044270		4700501292	108	W A CHILDRESS #674	SCOTT	1.1	SOUTHERN PUBLIC SERV
*8044479		4701100658	108	W D MEADOWS #Z-8	GRANT	4.6	COLUMBIA GAS TRANSMI
8044445		4701501740	108	W H EVANS #A-6	UNION	3.3	CONSOLIDATED GAS SUP
*8044473		4701100664	108	W L RUCKER #P-2	GRANT	0.8	COLUMBIA GAS TRANSMI
8044417		4709901703	108	W L WILSON #G-1	CEREDO	9.5	COLUMBIA GAS TRANSMI
*8044334		4707900953	108	W R KINDER #746	CURRY	3.1	PENNZOIL CO

VOLUME 246 PAGE 008

JD NO	JA DKT	API NO	SEC	WELL NAME	FIELD NAME	PROD	PURCHASER
*8044452		4701100654	108	W T MORRIS #Z-51	GRANT	3,0	COLUMBIA GAS TRANSMI
*8044528		4704302395	108	W W RAY ET UX #125	CARROLL	2,9	PENNZOIL CO
*8044335		4707900952	108	W W VANDELINDE ET AL #183	CURRY	1,6	PENNZOIL CO
*8044325		4707909540	108	W W VANDELINDE ET AL #185	CURRY	1,6	PENNZOIL CO
8044402		4701900433	108	WHITE OAK RAILWAY #M-19	KANAWHA	1,9	SOUTHERN PUBLIC SERV
*8044476		4701100661	108	WILLIAM KIRTLEY #P-34	GRANT	0,8	COLUMBIA GAS TRANSMI
8044517		4700501284	108	WM H SHEILDS #680	SCOTT	1,9	SOUTHERN PUBLIC SERV
8044514		4700501281	108	WM H SHEILDS #681	SCOTT	1,9	SOUTHERN PUBLIC SERV
*SOUTHERN TRIANGLE OIL CO INC				RECEIVED: 07/01/80 JA: WV			
8044412		4701782600	108	JESSIE RICHARDS	COVE DISTRICT	9,0	CONSOLIDATED GAS SUP
*THE MUTUAL OIL & GAS COMPANY				RECEIVED: 07/01/80 JA: WV			
8044387		4703322267	108	RHODA-DRUISON #1	BIG ROCK CAMP	8,2	CONSOLIDATED GAS SUP
*W A DEEM				RECEIVED: 07/01/80 JA: WV			
8044281		4708524600	108	BEE #1	UNION DISTRICT	1,2	CONSOLIDATED GAS SUP
*W H MOBSOR				RECEIVED: 07/01/80 JA: WV			
8044497		4708504585	108	GUFF #1	G L GOFF	2,5	CONSOLIDATED GAS SUP
8044393		4708524586	108	GREEN KNOB #1	MURPHY DISTRICT	3,5	CONSOLIDATED GAS SUP
8044277		4708504589	108	HILL #1	MURPHY DISTRICT	1,0	CONSOLIDATED GAS SUP
8044279		4708524592	108	HOOVER #1	G L GOFF	2,0	CONSOLIDATED GAS SUP
8044498		4708524590	108	PRUNTY #1	PRUNTY GAS CO	1,2	CONSUMERS GAS UTILIT
8044278		4708520459	108	RACKET #L	MURPHY DISTRICT	12,5	CONSOLIDATED GAS SUP
8044394		4708524587	108	WILSON #1	C A WILSON	5,0	CONSOLIDATED GAS SUP
*WARNER OIL & GAS CO				RECEIVED: 07/01/80 JA: WV			
8044372		4708504594	108	WARNER OIL & GAS CO	MURPHY DISTRICT	10,3	GODFREY L CABOT INC
*WILLIAMS WELL SURVEYS INC				RECEIVED: 07/01/80 JA: WV			
8044374		4708503546	108	GLEN W ROBERTS #2 WELL	MURPHY DISTRICT	16,9	CONSOLIDATED GAS SUP
8044375		4708523824	108	GLEN W ROBERTS #3 WELL	MURPHY DISTRICT (CRAB RU	16,9	CONSOLIDATED GAS SUP
**********							
** U.S. GEOLOGICAL SURVEY - ALBUQUERQUE,NM							
**********							
*C F RAYMOND				RECEIVED: 07/03/80 JA: CO 4			
8044643	COA-3973-79	0506705304	108	DAVIS #1	IGNACIO BLANCO	13,0	NORTHWEST PIPELINE C
8044642	COA-3972-79	0506705461	108	KIM UTE #1	IGNACIO BLANCO	15,0	NORTHWEST PIPELINE C
8044644	COA-3974-79	0506705806	108	UTE A #3	IGNACIO BLANCO	17,0	NORTHWEST PIPELINE C
*AMOCO PRODUCTION CO				RECEIVED: 07/03/80 JA: NM 4			
8044661	NM-0047-80	3002526322	103	GILLULLY FEDERAL GAS COM #17	EUMONT QUEEN	295,7	NORTHERN NATURAL GAS
8044654	NM-4927-79	3004506499	108	PO PIPKIN #4	BASIN-DAKOTA	21,0	EL PASO NATURAL GAS
*BILLY J KNOTT				RECEIVED: 07/03/80 JA: NM 4			
8044656	NM-0044-80	3004509616	108	KELLY #1	BLANCO MESA VERDE	20,0	EL PASO NATURAL GAS
*BRUCE ANDERSON				RECEIVED: 07/03/80 JA: NM 4			
8044633	NM-0295-80	3004523619	103	FEDERAL #2	BASIN DAKOTA	100,0	EL PASO NATURAL GAS
*CONOCO , INC				RECEIVED: 07/03/80 JA: NM 4			
8044658	NM 5258-79	3001504265	108	SANDERSON A NO 9	NMFU - EUNICE-MONUMENT (	3,1	WARREN PETROLEUM CO
*COQUINA OIL CORPORATION				RECEIVED: 07/03/80 JA: NM 4			
8044651	NM 4541-79	3001520824	102	MONSANTO FEDERAL #1	WILDCAT	180,0	
*DOME PETROLEUM CORP				RECEIVED: 07/03/80 JA: NM 4			
8044636	NM-0187-80	3004523804	103	DOME NAVAJO 12-26-13 #1	WAW - NIPP	234,0	EL PASO NATURAL GAS
8044634	NM-0185-80	3004523807	103	DOME NAVAJO 13-26-13 #1	WAW - NIPP	355,0	EL PASO NATURAL GAS
8044645	NM-0188-80	3004523806	103	DOME NAVAJO 13-26-13 #2	WAW - NIPP	450,0	EL PASO NATURAL GAS
8044646	NM-0189-80	3004523805	103	DOME NAVAJO 13-26-13 #3	WAW - NIPP	699,0	EL PASO NATURAL GAS
8044647	NM-0190-80	3004523808	103	DOME NAVAJO 13-26-13 #4	WAW - NIPP	558,0	EL PASO NATURAL GAS
8044635	NM-0186-80	3004523802	103	DOME NAVAJO 18-26-12 #1	WAW - NIPP	201,0	EL PASO NATURAL GAS
*EL PASO NATURAL GAS COMPANY				RECEIVED: 07/03/80 JA: NM 4			

VOLUME 246 PAGE 009

JO NO	JA DKT	API NO	SEC	* WELL NAME	FIELD NAME	PROD	PURCHASER
*8044652	NM-5093-79	3003920278	108	CANYON LARGO UNIT #154	OTERO-CHACRA GAS	21,0	EL PASO NATURAL GAS
*8044660	NM-0110-80	3003920275	108	CANYON LARGO UNIT #155	OTERO-CHACRA GAS	20,0	EL PASO NATURAL GAS
8044657	NM-0004-80	3004510685	108	CASE #4	BLANCO-MESAVERDE GAS	20,0	EL PASO NATURAL GAS
8044616	NM-0002-80-E	3004510694	108	CASE 3	BLANCO-MESAVERDE GAS	9,5	EL PASO NATURAL GAS
8044630	NM-0261-80	3004506724	108	DAY B #5	BLANCO-MESAVERDE GAS	18,0	EL PASO NATURAL GAS
8044655	NM-4915-79	3004513085	108	GRAMBLING #4	BLANCO-PICTURED CLIFFS G	21,0	EL PASO NATURAL GAS
8044641	NM-0299-80	3004523714	103	HEATON #4A	BLANCO MESAVERDE	220,0	EL PASO NATURAL GAS
8044640	NM-0298-80	3004523715	103	HEATON #7A	BLANCO MESAVERDE	220,0	EL PASO NATURAL GAS
8044615	NM-0300-80	3004523871	103	HEATON #8A	BLANCO MESAVERDE	290,0	EL PASO NATURAL GAS
8044608	NM-0342-80-A	3004523380	103	KELLY #2A MV	BLANCO MESAVERDE	180,0	EL PASO NATURAL GAS
8044609	NM-0342-80-B	3004523380	103	KELLY #2A PC	BLANCO PICTURED CLIFFS	40,0	EL PASO NATURAL GAS
8044619	NM-0303-80	3004500000	108	LODEWICK #6	FULCHER KUTZ-PICTURED CL	17,5	EL PASO NATURAL GAS
8044611	NM-0340-80	3004523885	103	NAGEEZI #5	BASIN DAKOTA	50,0	EL PASO NATURAL GAS
8044613	NM-0344-80	3004523739	103	NEWBERRY #4A	BLANCO MESAVERDE	180,0	EL PASO NATURAL GAS
8044610	NM-0341-80	3004523697	103	RIDDLE F #3A	BLANCO MESAVERDE	180,0	EL PASO NATURAL GAS
8044649	NM-4903-79	3003907416	108	SAN JUAN 28-5 UNIT #6	BLANCO-MESAVERDE GAS	20,0	EL PASO NATURAL GAS
8044653	NM-5091-79	3003920106	108	SAN JUAN 28-5 UNIT #77	BASIN-DAKOTA GAS	18,0	EL PASO NATURAL GAS
8044650	NM 4550-79	3003920872	108	SAN JUAN 28-6 UNIT #192	BLANCO SOUTH-PICTURED CL	18,0	EL PASO NATURAL GAS
8044614	NM-0343-80	3004523315	103	SAN JUAN 32-9 UNIT #18A	BLANCO MESAVERDE	220,0	EL PASO NATURAL GAS
*ENERGY RESERVES GROUP INC				RECEIVED: 07/03/80 JA: NM 4			
8044600	NM-0329-80	3004522239	108	GALLEGOS CANYON UNIT P C #268	WEST KUTZ P C	10,3	EL PASO NATURAL GAS
8044602	NM-0330-80	3004507045	108	GALLEGOS CANYON UNIT P C #4	WEST KUTZ P C	18,9	EL PASO NATURAL GAS
8044604	NM-0332-80	3004507182	108	GALLEGOS CANYON UNIT P C #40	WEST KUTZ P C	17,3	EL PASO NATURAL GAS
8044603	NM-0333-80	3004507212	108	GALLEGOS CANYON UNIT P C #7	WEST KUTZ P C	0,9	EL PASO NATURAL GAS
8044629	NM-0325-80	3004523706	103	GALLEGOS CANYON UNIT PC #281	KUTZ WEST PICTURED CLIFF	27,0	EL PASO NATURAL GAS
8044628	NM-0326-80	3004523821	103	GALLEGOS CANYON UNIT PC #290	KUTZ WEST PICTURED CLIFF	90,0	EL PASO NATURAL GAS
8044638	NM-0324-80	3004523822	103	GALLEGOS CANYON UNIT PC #291	KUTZ WEST PICTURED CLIFF	27,0	EL PASO NATURAL GAS
8044639	NM-0323-80	3004523998	103	GALLEGOS CANYON UNIT PC #298	KUTZ WEST PICTURED CLIFF	61,0	EL PASO NATURAL GAS
8044601	NM-0331-80	3003921303	108	JICARILLA 35 #6	OTERO CHACRA AND SOUTH B	17,6	NORTHWEST PIPELINE C
*GETTY OIL COMPANY				RECEIVED: 07/03/80 JA: NM 4			
8044612	NM-0345-80	3003905837	108	JICARILLA C NO 18	OTERO CHACRA	18,5	EL PASO NATURAL GAS
*J GREGORY MERRION&ROBERT L BAYLESS				RECEIVED: 07/03/80 JA: NM 4			
8044632	NM-0291-80	3004523691	103	CHACO #2-R	NAW FRUITLAND/PICTURED C	30,0	SOUTHERN UNION EXPLO
*MCCLELLAN OIL CORPORATION				RECEIVED: 07/03/80 JA: NM 4			
8044617	NM0001-80-ER	3001521955	108	HINKLE FEDERAL NO 4 FED LC-068677	HIGH NITRO GRAYBURG	16,6	EL PASO NATURAL GAS
*NORTHWEST PIPELINE CORPORATION				RECEIVED: 07/03/80 JA: NM 4			
8044659	NM-0163-80	3003921792	103	SAN JUAN 30-5 UNIT #64	BLANCO PICTURED CLIFFS	33,0	NORTHWEST PIPELINE C
*ODESSA NATURAL CORPORATION				RECEIVED: 07/03/80 JA: NM 4			
8044648	NM-0297-80	3003922195	103	CHACON JICARILLA D-15	CHACON DAKOTA ASSOCIATED	0,0	EL PASO NATURAL GAS
8044631	NM-0283-80	3003922152	103	JICARILLA JV KD NO 7	CHACON DAKOTA ASSOCIATED	0,0	EL PASO NATURAL GAS
*SCHALK DEVELOPMENT COMPANY				RECEIVED: 07/03/80 JA: NM 4			
8044625	NM-0320-80	3003922194	103	SCHALK 31-4 #1	WILDCAT MESA VERDE	0,0	NORTHWEST PIPELINE C
8044637	NM-0321-80	3003921956	103	SCHALK 43 #2	CHACRA	0,0	EL PASO NATURAL GAS
*SOUTHLAND ROYALTY CO				RECEIVED: 07/03/80 JA: NM 4			
8044620	NM-0301-80	3004520548	108	CHANDELL #5	BLANCO	15,0	SOUTHERN UNION GATHE
8044607	NM-0334-80	3004523884	103	STATE LINE #1	BASIN	60,0	EL PASO NATURAL GAS
*SUPRON ENERGY CORPORATION				RECEIVED: 07/03/80 JA: NM 4			
8044627	NM-0310-80	3004511557	108	NEWSOM B-10	BASIN DAKOTA	17,3	EL PASO NATURAL GAS
8044621	NM-0309-80	3004510390	108	SENTER FEDERAL #1	BASIN DAKOTA	16,8	EL PASO NATURAL GAS
*TENNECO OIL COMPANY				RECEIVED: 07/03/80 JA: NM 4			
8044623	NM-0306-80	3004523797	103	DELHI-TAYLOR PUE #1-E	BASIN DAKOTA	500,0	EL PASO NATURAL GAS
8044622	NM-0307-80	3004523487	103	FIELDS #2	BASIN DAKOTA	500,0	EL PASO NATURAL GAS
8044624	NM-0305-80	3004523827	103	FLORANCE #117	BASIN DAKOTA	500,0	EL PASO NATURAL GAS

VOLUME 246 PAGE 010

JD NO	JA DKT	API NO	SEC	WELL NAME	FIELD NAME	PROD	PURCHASER
8044606	NM-0336-80-B	3004523478	103	HAMNER 3A DK	BASIN DAKOTA	500.0	EL PASO NATURAL GAS
8044605	NM-0336-80-A	3004523478	103	HAMNER 3A MV	BLANCO MESAVERDE	550.0	SOUTHERN UNION GATHE
8044618	NM-0304-80	3004523814	103	TAPP #2	BASIN DAKOTA	500.0	EL PASO NATURAL GAS
*YATES PETROLEUM CORPORATION				RECEIVED: 07/03/80 JA: NM 4			
8044626	NM-0512-80	3001560614	102	MCCLELLAN MB FEDERAL NO 1	WILDCAT	0.0	TRANSWESTERN PIPELIN

OTHER PURCHASERS

8044267	thru	8044269	Southern Public Service Co.
8044282	thru	8044284	Pennzoil Co
8044285			Southern Public Service Co.
8044292	thru	8044293	Pennzoil Co
8044294	thru	8044296	Southern Public Service Co
8044312	thru	8044335	Southern Public Service Co.
8044336	thru	8044349	Pennzoil Co.
8044352	thru	8044353	Pennzoil Co.
8044359	thru	8044370	Pennzoil Co
8044389	thru	8044391	Pennzoil Co.
8044396	thru	8044397	Southern Public Service Co.
8044449	thru	8044491	Southern Public Service Co.
8044519	thru	8044530	Southern Public Service Co
8044549			Chase Gathering Systems Inc.
8044552			Chase Gathering Systems Inc.
8044556	thru	8044558	Chase Gathering Systems Inc.
8044561			Chase Gathering Systems
8044562			Oklahoma Natural Gas Gathering Corp.
8044570	thru	8044572	Chase Gathering Systems Inc.
8044574			Transok Pipeline Co
8044583			Chase Gathering Systems Inc.
8044586	thru	8044587	Champlin Petroleum Co.
8044652			North West Pipeline Corp.
8044660			North West Pipeline Co.

[FR Doc 80-23698 Filed 8-5-80; 8:45 am]
BILLING CODE 6450-85-C

[Volume 247]

Determinations by Jurisdictional Agencies Under the Natural Gas Policy Act of 1978

Issued July 31, 1980.

The Federal Energy Regulatory Commission received notices of determinations from the jurisdictional agencies listed herein, for the indicated wells, pursuant to the Natural Gas Policy Act of 1978 and 18 CFR 274.104. Negative determinations are indicated by a (D) in the DEN column. Estimated annual production is in million cubic feet (MMcf).

The applications for determination in these proceedings together with a copy or description of other materials in the record on which such determinations were made are available for inspection, except to the extent such material is treated as confidential under 18 CFR 275.206, at the Commission's Office of Public Information, Room 1000, 825 North Capitol Street NE., Washington, D.C. 20426.

Persons objecting to any of these final determinations may, in accordance with 18 CFR 275.203 and 18 CFR 275.204, file a protest with the Commission on or before August 21, 1980.

Please reference the FERC Control Number in all correspondence related to these determinations.

Kenneth F. Plumb,

Secretary.

BILLING CODE 6450-85-M

UNITED STATES OF AMERICA
FEDERAL ENERGY REGULATORY COMMISSION

VOLUME 247

NOTICE OF DETERMINATIONS
BY JURISDICTIONAL AGENCIES UNDER
THE NATURAL GAS POLICY ACT OF 1978

JD NO	JA DKT	API NO	SEC	WELL NAME	FIELD NAME	PROD	PURCHASER
TEXAS RAILROAD COMMISSION							
*ADELANTE PETROLEUM CO				RECEIVED: 07/07/80 JA: TX			
8044910	13606	4210531945	103	HUDSPETH NO 1-73	HUDSPETH (CANYON)	150.0	LOVACA GATHERING CO
*AMARILLO OIL COMPANY				RECEIVED: 07/07/80 JA: TX			
8044740	10284	4239330664	103	FLOWERS A #1-4H	HENDUTA NORTHWEST GRANIT	220.0	PIONEER NATURAL GAS
*AMERICAN PETROFINA COMPANY OF TEXAS				RECEIVED: 07/07/80 JA: TX			
8044708	07717	4235500000	108	M ELLIFF - #19	AGUA DULCE (5600)	6.0	TENNESSEE GAS PIPELI
*AMOCO PRODUCTION CO				RECEIVED: 07/07/80 JA: TX			
8044710	08057	4221932531	102	ALEX A SLAUGHTER ESTATE A NO 47	SUNDOWN (ABO)	0.3	EL PASO NATURAL GAS
8044709	08046	4236530295	103	CARTHAGE GAS UNIT 12 NO 3	CARTHAGE (COTTON VALLEY)	419.3	TEJAS GAS CORP
8044913	13982	4236530782	103	J B CARTER NO 1	CARTHAGE (TRAVIS PEAK 64	18.3	UNITED GAS PIPELINE
8044901	12854	4236530886	102	J B DUKE NO 1	WILDCAT-(TRAVIS PEAK 653	182.5	UNITED GAS PIPE LINE
8044671	04885	4246931262	103	VANDENBERGE & HILL NO 28	PLACEDO EAST	31.0	TENNESSEE GAS PIPELI
8044957	16072	4220330618	102	WILLIAM MATTHEWS NO 1	BLOCKER (COTTON VALLEY)	436.0	UNITED GAS PIPE LINE
*ANTARES OIL CORPORATION				RECEIVED: 07/07/80 JA: TX			
8044723	09162	4224930980	103	C W PRICE #3	TERESA (3110)	1080.0	UNITED GAS PIPELINE
*ARAPAHOE PRODUCTION CO				RECEIVED: 07/07/80 JA: TX			
8044744	10440	4223500000	108	MITTIE STEVENSON #1 WELL	WEST PANHANDLE HUTCHINSO	40.0	PANHANDLE PRODUCING
8044745	10441	4223500000	108	MITTIE STEVENSON #2 WELL	WEST PANHANDLE HUTCHINSO	40.0	PANHANDLE PRODUCING
8044746	10443	4223500000	108	MITTIE STEVENSON #4 WELL	WEST PANHANDLE HUTCHINSO	40.0	PANHANDLE PRODUCING
*ARCO OIL AND GAS COMPANY				RECEIVED: 07/07/80 JA: TX			
8044921	14310	4217310223	108	J B CALVERLEY 32 #2	SPRAYBERRY TREND AREA	8.0	EL PASO NATURAL GAS
8044686	06383	4215132543	103	J R FOSTER #51	HAGIST RANCH (750)	6.3	NATURAL GAS PIPELINE
8044944	14846	4235531219	103	STATE TRACT 396 #8	REDFISH BAY (ZONE-18)	144.0	UNITED GAS PIPE LINE
8044742	10302	4206530665	103	WARE A #25	PANHANDLE CARSON	15.0	GETTY OIL CO
8044741	10301	4206530666	103	WARE A #27	PANHANDLE CARSON	9.0	GETTY OIL CO
8044743	10303	4206530661	103	WARE B #22	PANHANDLE HUTCHINSON COU	36.0	GETTY OIL CO
*ATOKA OPERATING INC				RECEIVED: 07/07/80 JA: TX			
8044760	10961	4241732488	103	PITTMAN GROUP WELL #2	STAS (MISS)	154.0	DELHI GAS PIPELINE C
*BAY ROCK CORPORATION				RECEIVED: 07/07/80 JA: TX			
8044922	14467	4246931228	102	JAMIE R DEAN NO 18	KOONTZ NE (6270)	250.0	TENNESSEE GAS PIPELI
8044923	14468	4246931336	102	JOHN N KEEKAN ET AL NO 1	KOONTZ NE (6710)	250.0	TENNESSEE GAS PIPELI
*BILL FORNEY INC				RECEIVED: 07/07/80 JA: TX			
8044763	12481	4229732004	102	J T LYNE NO 2 - 82379	CHARLINE (FORNEY 5) FIEL	110.0	TRANSCONTINENTAL GAS
*C L GAGE JR				RECEIVED: 07/07/80 JA: TX			
8044765	11099	4249700000	103	DINWIDDIE NO 1	BOONSVILLE (BEND CONGL G	150.0	NATURAL GAS PIPELINE
8044761	11095	4249700000	103	GEORGE EATON NO 1 78469	BOONSVILLE (BEND CONGL G	144.0	DELHI GAS PIPELINE C
8044664	06374	4249700000	103	GERALD STEPHENS #1	BOONSVILLE (BEND CONGL G	132.0	NATURAL GAS PIPELINE
8044726	09268	4249700000	103	SHYL LEWIS NO 1	BOONSVILLE (BEND CONGL G	110.0	NATURAL GAS PIPELINE
8044762	11096	4249700000	103	VIRGIL PARSONS NO 1 78468	BOONSVILLE (BEND CONGL G	12.0	DELHI GAS PIPELINE C
8044685	06375	4249700000	103	WM & MARIE LEWIS #1	BOONSVILLE (BEND CONGL G	180.0	NATURAL GAS PIPELINE
8044683	06371	4249700000	103	WM & MARIE LEWIS A-1	BOONSVILLE	276.0	NATURAL GAS PIPELINE
*CANYON OPERATING UNIT				RECEIVED: 07/07/80 JA: TX			

VOLUME 247 PAGE 002

JD NO	JA DKT	API NO	SEC	WELL NAME	FIELD NAME	PROD	PURCHASER
*8044781	12372	4241330763	103	CASE #1	VELREX (CANYON UPPER)	54.0	CRA INC
*CARL M ARCHER				RECEIVED: 07/07/80 JA: TX			
8044719	09015	4219500000	108	BENNETT 33394	HANSFORD (UPPER MORROW)	8.0	NORTHERN NATURAL GAS
8044721	09017	4219500000	108	CITY OF SPEARMAN 28212	HANSFORD (UPPER MORROW)	18.0	NORTHERN NATURAL GAS
8044720	09016	4219530022	108	GLEN HILLER 50777	CLEMENTINE (MARMATON 602	9.0	PANHANDLE EASTERN PI
*CENTEX OIL & GAS INC				RECEIVED: 07/07/80 JA: TX			
8044966	17476	4224500000	102	HIGH ISLAND BLOCK 10-L NO 3	HIGH ISLAND BLOCK 10-L G	0.0	TRANSCONTINENTAL GAS
*CHALMERS OPERATING CO INC				RECEIVED: 07/07/80 JA: TX			
8044911	13608	4209330553	103	CUAN-SIMPSON #82057	MITTIE (MARBLE FALLS)	120.0	LONE STAR GAS CO
*CLOVER ENERGY CORP				RECEIVED: 07/07/80 JA: TX			
8044964	17242	4220130963	102	WHELESS NO 2-C	GUM GULLY W (KELLER)	90.0	UNITED TEXAS TRANSMI
*COLORADO INTERSTATE GAS CO				RECEIVED: 07/07/80 JA: TX			
8044924	14471	4234130548	103	MASTERSON 101R	WEST PANHANDLE (RED CAVE	73.0	COLORADO INTERSTATE
*CONOCO,INC				RECEIVED: 07/07/80 JA: TX			
8044680	05879	4207930928	103	CONOCO-DEAN UNIT (60106) #125	SLAUGHTER / SAN ANDRES	0.7	AMOCO PRODUCTION CO
8044681	05975	4207930929	103	CONOCO-DEAN UNIT (60106) #132	SLAUGHTER / SAN ANDRES	0.7	AMOCO PRODUCTION CO
8044736	10224	4236900000	108	FORD-GERALDINE UNIT NO 12 21021	GERALDINE / FORD	2.9	EL PASO NATURAL GAS
8044732	10159	4222700000	108	G O CHALK D NO 12 02688	HOWARD-GLASSCOCK	0.4	PHILLIPS PETROLEUM C
8044738	10267	4243300000	108	GUEST/CANYON SAND/UNIT NO 22 10855	GUEST / CANYON SAND	0.4	CITIES SERVICE OIL C
8044739	10269	4222700000	108	H R CLAY A NO 22 02691	HOWARD-GLASSCOCK	0.4	PHILLIPS PETROLEUM C
8044737	10262	4243300000	108	J G DALBY (04291) #1	FLOWERS WEST / CANYON	0.3	CITIES SERVICE OIL C
8044846	12776	4232330549	108	N J CHITTIM NO A 23 02082	SACATOSA (SAN MIGUEL #1	0.4	LOVACA GATHERING CO
8044847	12777	4232330548	108	N J CHITTIM NO A 24 02082	SACATOSA (SAN MIGUEL #1	0.4	LOVACA GATHERING CO
8044844	12774	4232330551	108	N J CHITTIM NO A21 02082	SACATOSA (SAN MIGUEL #1	0.4	LOVACA GATHERING CO
8044845	12775	4232330550	108	N J CHITTIM NO A22 02082	SACATOSA (SAN MIGUEL #1	0.4	LOVACA GATHERING CO
8044848	12778	4232330547	108	N J CHITTIM NO B 4 02082	SACATOSA (SAN MIGUEL #1	0.4	LOVACA GATHERING CO
8044785	12610	4232330518	108	N J CHITTIM NO C10 02082	SACATOSA (SAN MIGUEL #1	0.4	LOVACA GATHERING CO
8044786	12611	4232300000	108	N J CHITTIM NO E2 02082	SACATOSA (SAN MIGUEL #1	0.4	LOVACA GATHERING CO
8044876	12825	4232330517	108	N J CHITTIM NO 1703 02082	SACATOSA (SAN MIGUEL #1	0.4	LOVACA GATHERING CO
8044875	12823	4232300000	108	N J CHITTIM NO 3613 02082	SACATOSA (SAN MIGUEL #1	0.4	LOVACA GATHERING CO
8044874	12822	4232300000	108	N J CHITTIM NO 3638 02082	SACATOSA (SAN MIGUEL #1	0.4	LOVACA GATHERING CO
8044850	12780	4232330298	108	N J CHITTIM NO 3645 02082	SACATOSA (SAN MIGUEL #1	0.4	LOVACA GATHERING CO
8044896	12846	4232330300	108	N J CHITTIM NO 3647 02082	SACATOSA (SAN MIGUEL #1	0.4	LOVACA GATHERING CO
8044895	12845	4232330297	108	N J CHITTIM NO 3648 02082	SACATOSA (SAN MIGUEL #1	0.4	LOVACA GATHERING CO
8044894	12844	4232330322	108	N J CHITTIM NO 3651 02082	SACATOSA (SAN MIGUEL #1	0.4	LOVACA GATHERING CO
8044868	12812	4232330321	108	N J CHITTIM NO 3652 02082	SACATOSA (SAN MIGUEL #1	0.4	LOVACA GATHERING CO
8044866	12810	4232330320	108	N J CHITTIM NO 3653 02082	SACATOSA (SAN MIGUEL #1	0.4	LOVACA GATHERING CO
8044867	12811	4232330319	108	N J CHITTIM NO 3654 02082	SACATOSA (SAN MIGUEL #1	0.4	LOVACA GATHERING CO
8044859	12794	4232330329	108	N J CHITTIM NO 3656 02082	SACATOSA (SAN MIGUEL #1	0.4	LOVACA GATHERING CO
8044858	12793	4232330316	108	N J CHITTIM NO 3657 02082	SACATOSA (SAN MIGUEL #1	0.4	LOVACA GATHERING CO
8044857	12792	4232330317	108	N J CHITTIM NO 3658 02082	SACATOSA (SAN MIGUEL #1	0.4	LOVACA GATHERING CO
8044855	12789	4232330318	108	N J CHITTIM NO 3659 02082	SACATOSA (SAN MIGUEL #1	0.4	LOVACA GATHERING CO
8044854	12788	4232300000	108	N J CHITTIM NO 3722 02082	SACATOSA (SAN MIGUEL #1	0.4	LOVACA GATHERING CO
8044885	12834	4232300000	108	N J CHITTIM NO 3746 02082	SACATOSA (SAN MIGUEL #1	0.4	LOVACA GATHERING CO
8044884	12833	4232300000	108	N J CHITTIM NO 3758 02082	SACATOSA (SAN MIGUEL #1	0.4	LOVACA GATHERING CO
8044883	12832	4232300000	108	N J CHITTIM NO 3760 02082	SACATOSA (SAN MIGUEL #1	0.4	LOVACA GATHERING CO
8044892	12841	4232300000	108	N J CHITTIM NO 3822 02082	SACATOSA (SAN MIGUEL #1	0.4	LOVACA GATHERING CO
8044891	12840	4232300000	108	N J CHITTIM NO 3825 02082	SACATOSA (SAN MIGUEL #1	0.4	LOVACA GATHERING CO
8044853	12787	4232330536	108	N J CHITTIM NO 3852 02082	SACATOSA (SAN MIGUEL #1	0.4	LOVACA GATHERING CO
8044852	12786	4232331165	108	N J CHITTIM NO 3855 02082	SACATOSA (SAN MIGUEL #1	0.4	LOVACA GATHERING CO
8044851	12785	4232330533	108	N J CHITTIM NO 3906 02082	SACATOSA (SAN MIGUEL #1	0.4	LOVACA GATHERING CO
8044887	12836	4232330531	108	N J CHITTIM NO 3907 02082	SACATOSA (SAN MIGUEL #1	0.4	LOVACA GATHERING CO
8044886	12835	4232300000	108	N J CHITTIM NO 4005 02082	SACATOSA (SAN MIGUEL #1	0.4	LOVACA GATHERING CO

VOLUME 247 PAGE 003

JD NO	JA DKT	API NO	SEC	WELL NAME	FIELD NAME	PROD	PURCHASER
8044807	12736	4232300000	108	N J CHITTIM NO 4020 02082	SACATOSA (SAN MIGUEL #1	0.4	LOVACA GATHERING CO
8044808	12737	4232300000	108	N J CHITTIM NO 4034 02082	SACATOSA (SAN MIGUEL #1	0.4	LOVACA GATHERING CO
8044809	12738	4232300000	108	N J CHITTIM NO 4035 02082	SACATOSA (SAN MIGUEL #1	0.4	LOVACA GATHERING CO
8044810	12740	4232300000	108	N J CHITTIM NO 4038 02082	SACATOSA (SAN MIGUEL #1	0.4	LOVACA GATHERING CO
8044811	12741	4232300000	108	N J CHITTIM NO 4039 02082	SACATOSA (SAN MIGUEL #1	0.4	LOVACA GATHERING CO
8044812	12742	4232300000	108	N J CHITTIM NO 4052 02082	SACATOSA (SAN MIGUEL #1	0.4	LOVACA GATHERING CO
8044813	12743	4232300000	108	N J CHITTIM NO 4053 02082	SACATOSA (SAN MIGUEL #1	0.4	LOVACA GATHERING CO
8044897	12849	4232330556	108	N J CHITTIM NO 4060 02082	SACATOSA (SAN MIGUEL #1	0.4	LOVACA GATHERING CO
8044865	12809	4232300000	108	N J CHITTIM NO 412 02082	SACATOSA (SAN MIGUEL #1	0.4	LOVACA GATHERING CO
8044898	12850	4232300000	108	N J CHITTIM NO 4136 02082	SACATOSA (SAN MIGUEL #1	0.4	LOVACA GATHERING CO
8044899	12851	4232300000	108	N J CHITTIM NO 4139 02082	SACATOSA (SAN MIGUEL #1	0.4	LOVACA GATHERING CO
8044900	12852	4232300000	108	N J CHITTIM NO 4143 02082	SACATOSA (SAN MIGUEL #1	0.4	LOVACA GATHERING CO
8044864	12808	4232300000	108	N J CHITTIM NO 423 02082	SACATOSA (SAN MIGUEL #1	0.4	LOVACA GATHERING CO
8044893	12843	4232300000	108	N J CHITTIM NO 4235 02082	SACATOSA (SAN MIGUEL #1	0.4	LOVACA GATHERING CO
8044814	12744	4232330380	108	N J CHITTIM NO 4248 02082	SACATOSA (SAN MIGUEL #1	0.4	LOVACA GATHERING CO
8044815	12745	4232330379	108	N J CHITTIM NO 4249 02082	SACATOSA (SAN MIGUEL #1	0.4	LOVACA GATHERING CO
8044816	12746	4232330442	108	N J CHITTIM NO 4251 02082	SACATOSA (SAN MIGUEL #1	0.4	LOVACA GATHERING CO
8044817	12747	4232330444	108	N J CHITTIM NO 4256 02082	SACATOSA (SAN MIGUEL #1	0.4	LOVACA GATHERING CO
8044888	12837	4232330443	108	N J CHITTIM NO 4259 02082	SACATOSA (SAN MIGUEL #1	0.4	LOVACA GATHERING CO
8044889	12838	4232330440	108	N J CHITTIM NO 4260 02082	SACATOSA (SAN MIGUEL #1	0.4	LOVACA GATHERING CO
8044890	12839	4232300000	108	N J CHITTIM NO 4313 02082	SACATOSA (SAN MIGUEL #1	0.4	LOVACA GATHERING CO
8044863	12807	4232330539	108	N J CHITTIM NO 439 02082	SACATOSA (SAN MIGUEL #1	0.4	LOVACA GATHERING CO
8044862	12806	4232300000	108	N J CHITTIM NO 506 02082	SACATOSA (SAN MIGUEL #1	0.4	LOVACA GATHERING CO
8044861	12805	4232300000	108	N J CHITTIM NO 511 02082	SACATOSA (SAN MIGUEL #1	0.4	LOVACA GATHERING CO
8044860	12804	4232300000	108	N J CHITTIM NO 512 02082	SACATOSA (SAN MIGUEL #1	0.4	LOVACA GATHERING CO
8044870	12814	4232300000	108	N J CHITTIM NO 513 02082	SACATOSA (SAN MIGUEL #1	0.4	LOVACA GATHERING CO
8044869	12813	4232300000	108	N J CHITTIM NO 533 02082	SACATOSA (SAN MIGUEL #1	0.4	LOVACA GATHERING CO
8044856	12791	4232300000	108	N J CHITTIM NO 536 02082	SACATOSA (SAN MIGUEL #1	0.4	LOVACA GATHERING CO
8044881	12830	4232330302	108	N J CHITTIM NO 544 02082	SACATOSA (SAN MIGUEL #1	0.4	LOVACA GATHERING CO
8044880	12829	4232300000	108	N J CHITTIM NO 603 02082	SACATOSA (SAN MIGUEL #1	0.4	LOVACA GATHERING CO
8044879	12828	4232300000	108	N J CHITTIM NO 604 02082	SACATOSA (SAN MIGUEL #1	0.4	LOVACA GATHERING CO
8044878	12827	4232300000	108	N J CHITTIM NO 605 02082	SACATOSA (SAN MIGUEL #1	0.4	LOVACA GATHERING CO
8044877	12826	4232300000	108	N J CHITTIM NO 607 02082	SACATOSA (SAN MIGUEL #1	0.4	LOVACA GATHERING CO
8044787	12694	4232330374	108	N J CHITTIM NO 6530 02082	SACATOSA (SAN MIGUEL #1	0.4	LOVACA GATHERING CO
8044788	12695	4232330373	108	N J CHITTIM NO 6531 02082	SACATOSA (SAN MIGUEL #1	0.4	LOVACA GATHERING CO
8044789	12696	4232330372	108	N J CHITTIM NO 6532 02082	SACATOSA (SAN MIGUEL #1	0.4	LOVACA GATHERING CO
8044790	12697	4232330371	108	N J CHITTIM NO 6533 02082	SACATOSA (SAN MIGUEL #1	0.4	LOVACA GATHERING CO
8044791	12698	4232330370	108	N J CHITTIM NO 6534 02082	SACATOSA (SAN MIGUEL #1	0.4	LOVACA GATHERING CO
8044882	12831	4232330369	108	N J CHITTIM NO 6535 02082	SACATOSA (SAN MIGUEL #1	0.4	LOVACA GATHERING CO
8044818	12748	4232330368	108	N J CHITTIM NO 6536 02082	SACATOSA (SAN MIGUEL #1	0.4	LOVACA GATHERING CO
8044819	12749	4232330367	108	N J CHITTIM NO 6537 02082	SACATOSA (SAN MIGUEL #1	0.4	LOVACA GATHERING CO
8044820	12750	4232330385	108	N J CHITTIM NO 6540 02082	SACATOSA (SAN MIGUEL #1	0.4	LOVACA GATHERING CO
8044821	12751	4232330384	108	N J CHITTIM NO 6542 02082	SACATOSA (SAN MIGUEL #1	0.4	LOVACA GATHERING CO
8044794	12702	4232330429	108	N J CHITTIM NO 6632 02082	SACATOSA (SAN MIGUEL #1	0.4	LOVACA GATHERING CO
8044795	12704	4232330425	108	N J CHITTIM NO 6636 02082	SACATOSA (SAN MIGUEL #1	0.4	LOVACA GATHERING CO
8044822	12752	4232330420	108	N J CHITTIM NO 6640 02082	SACATOSA (SAN MIGUEL #1	0.4	LOVACA GATHERING CO
8044823	12753	4232330421	108	N J CHITTIM NO 6641 02082	SACATOSA (SAN MIGUEL #1	0.4	LOVACA GATHERING CO
8044824	12754	4232330417	108	N J CHITTIM NO 6643 02082	SACATOSA (SAN MIGUEL #1	0.4	LOVACA GATHERING CO
8044825	12755	4232330418	108	N J CHITTIM NO 6644 02082	SACATOSA (SAN MIGUEL #1	0.4	LOVACA GATHERING CO
8044796	12705	4232330415	108	N J CHITTIM NO 6646 02082	SACATOSA (SAN MIGUEL #1	0.4	LOVACA GATHERING CO
8044792	12700	4232330414	108	N J CHITTIM NO 6648 02082	SACATOSA (SAN MIGUEL #1	0.4	LOVACA GATHERING CO
8044793	12701	4232330413	108	N J CHITTIM NO 6649 02082	SACATOSA (SAN MIGUEL #1	0.4	LOVACA GATHERING CO
8044797	12706	4232330408	108	N J CHITTIM NO 6651 02082	SACATOSA (SAN MIGUEL #1	0.4	LOVACA GATHERING CO

VOLUME 247 PAGE 004

JD NO	JA DKT	API NO	SEC	* WELL NAME	FIELD NAME	PROD	PURCHASER
8044798	12708	4232330410	108	N J CHITTIM NO 6653 02082	SACATOSA (SAN MIGUEL #1	0,4	LOVACA GATHERING CO
8044799	12709	4232330411	108	N J CHITTIM NO 6654 02082	SACATOSA (SAN MIGUEL #1	0,4	LOVACA GATHERING CO
8044800	12710	4232330459	108	N J CHITTIM NO 6655 02082	SACATOSA (SAN MIGUEL #1	0,4	LOVACA GATHERING CO
8044801	12711	4232330460	108	N J CHITTIM NO 6656 02082	SACATOSA (SAN MIGUEL #1	0,4	LOVACA GATHERING CO
8044802	12712	4232330461	108	N J CHITTIM NO 6657 02082	SACATOSA (SAN MIGUEL #1	0,4	LOVACA GATHERING CO
8044803	12713	4232330462	108	N J CHITTIM NO 6658 02082	SACATOSA (SAN MIGUEL #1	0,4	LOVACA GATHERING CO
8044804	12714	4232331179	108	N J CHITTIM NO 6660 02082	SACATOSA (SAN MIGUEL #1	0,4	LOVACA GATHERING CO
8044805	12715	4232300000	108	N J CHITTIM NO 6734 02082	SACATOSA (SAN MIGUEL #1	0,4	LOVACA GATHERING CO
8044806	12716	4232300000	108	N J CHITTIM NO 6741 02082	SACATOSA (SAN MIGUEL #1	0,4	LOVACA GATHERING CO
8044826	12756	4232330487	108	N J CHITTIM NO 6746 02082	SACATOSA (SAN MIGUEL #1	0,4	LOVACA GATHERING CO
8044827	12757	4232330486	108	N J CHITTIM NO 6747 02082	SACATOSA (SAN MIGUEL #1	0,4	LOVACA GATHERING CO
8044828	12758	4232330485	108	N J CHITTIM NO 6748 02082	SACATOSA (SAN MIGUEL #1	0,4	LOVACA GATHERING CO
8044829	12759	4232330484	108	N J CHITTIM NO 6749 02082	SACATOSA (SAN MIGUEL #1	0,4	LOVACA GATHERING CO
8044830	12760	4232330483	108	N J CHITTIM NO 6750 02082	SACATOSA (SAN MIGUEL #1	0,4	LOVACA GATHERING CO
8044831	12761	4232330482	108	N J CHITTIM NO 6751 02082	SACATOSA SAN MIGUEL #1 S	0,4	LOVACA GATHERING CO
8044832	12762	4232330481	108	N J CHITTIM NO 6752 02082	SACATOSA SAN MIGUEL #1 S	0,4	LOVACA GATHERING CO
8044833	12763	4232330480	108	N J CHITTIM NO 6753 02082	SACATOSA SAN MIGUEL #1 S	0,4	LOVACA GATHERING CO
8044834	12764	4232330479	108	N J CHITTIM NO 6754 02082	SACATOSA SAN MIGUEL #1 S	0,4	LOVACA GATHERING CO
8044835	12765	4232330478	108	N J CHITTIM NO 6755 02082	SACATOSA (SAN MIGUEL #1	0,4	LOVACA GATHERING CO
8044836	12766	4232330477	108	N J CHITTIM NO 6756 02082	SACATOSA (SAN MIGUEL #1	0,4	LOVACA GATHERING CO
8044837	12767	4232330476	108	N J CHITTIM NO 6757 02082	SACATOSA (SAN MIGUEL #1	0,4	LOVACA GATHERING CO
8044838	12768	4232330475	108	N J CHITTIM NO 6758 02082	SACATOSA (SAN MIGUEL #1	0,4	LOVACA GATHERING CO
8044839	12769	4232330474	108	N J CHITTIM NO 6759 02082	SACATOSA (SAN MIGUEL #1	0,4	LOVACA GATHERING CO
8044840	12770	4232330473	108	N J CHITTIM NO 6760 02082	SACATOSA (SAN MIGUEL #1	0,4	LOVACA GATHERING CO
8044841	12771	4232330472	108	N J CHITTIM NO 6761 02082	SACATOSA (SAN MIGUEL #1	0,4	LOVACA GATHERING CO
8044842	12772	4232330470	108	N J CHITTIM NO 6763 02082	SACATOSA (SAN MIGUEL #1	0,4	LOVACA GATHERING CO
8044843	12773	4232330469	108	N J CHITTIM NO 6764 02082	SACATOSA (SAN MIGUEL #1	0,4	LOVACA GATHERING CO
8044903	12903	4232330465	108	N J CHITTIM NO 6917 02082	SACATOSA (SAN MIGUEL #1	0,4	LOVACA GATHERING CO
8044904	12904	4232330467	108	N J CHITTIM NO 6918 02082	SACATOSA (SAN MIGUEL #1	0,4	LOVACA GATHERING CO
8044905	12905	4232330490	108	N J CHITTIM NO 6922 02082	SACATOSA (SAN MIGUEL #1	0,4	LOVACA GATHERING CO
8044871	12815	4232330090	108	N J CHITTIM NO 7209 02082	SACATOSA (SAN MIGUEL #1	0,4	LOVACA GATHERING CO
8044872	12816	4232330496	108	N J CHITTIM NO 9910 02082	SACATOSA (SAN MIGUEL #1	0,4	LOVACA GATHERING CO
8044873	12817	4232330495	108	N J CHITTIM NO 9911 02082	SACATOSA (SAN MIGUEL #1	0,4	LOVACA GATHERING CO
8044849	12779	4232330493	108	N J CHITTIM NO 9913 02082	SACATOSA (SAN MIGUEL #1	0,4	LOVACA GATHERING CO
8044750	10046	4215100000	108	ROUND TOP (PALO PINTO) UNIT NO 56 *	ROUND TOP / PALO PINTO R	0,7	LONE STAR GAS CO
8044729	10045	4230100000	108	S A LINK NO 2 19342	TUNSTILL EAST / DEL	1,5	PHILLIPS PET CO
8044735	10165	4216500000	108	SUE STEPHENS NO 9 16297	WASSON / WICHITA ALBANY	2,2	SHELL OIL CO
8044731	10065	4230100000	108	TXL-17 NO 4 14451	TUNSTILL EAST / DEL	10,9	PHILLIPS PETROLEUM C
8044733	10164	4243300000	108	WEST FLOWERS UNIT NO 52 11787	FLOWERS W / CANYON SAND	0,3	CITIES SERVICE OIL C
8044734	10162	4213300000	108	WIGHT UNIT NO 72 20661	COWDEN NORTH	36,5	AMOCO PRODUCTION CO
*CONVEST ENERGY CORP				RECEIVED: 07/07/80 JA: TX			
8044970	17911	4216931038	102	WAYNE WILLIAMS ET AL #1A	POLLAN/ELLENBURGER	0,0	EL PASO NATURAL GAS
*CURNELL OIL CO				RECEIVED: 07/07/80 JA: TX			
8044682	06220	4250131497	103	CURNELL UNIT 3170	WASSON/SAN ANDRES	63,0	SHELL OIL CO
*DEBO PRODUCTION CO				RECEIVED: 07/07/80 JA: TX			
8044747	10453	4248300000	108	TINDALL #1	PANHANDLE EAST	3,1	WARREN PETROLEUM CO
*DELTA DRILLING CO				RECEIVED: 07/07/80 JA: TX			
8044956	15492	4236530897	103	FROST LUMBER COMPANY #1	WILDCAT (COTTON VALLEY)	275,0	UNITED GAS PIPE LINE
*DETRA PRODUCING CO				RECEIVED: 07/07/80 JA: TX			
8044716	08706	4223300000	108	MCCARTY #4	PANHANDLE	12,0	GETTY OIL CO
*DISCOVERY OPERATING INC				RECEIVED: 07/07/80 JA: TX			
*8044778	12270	4241330775	102	DEEDING #1	KA-ZE-SA (CANYON)	180,0	CHA INC
*ENSERCH EXPLORATION INC				RECEIVED: 07/07/80 JA: TX			

VOLUME 247 PAGE 005

JD NO	JA DKT	API NO	SEC	WELL NAME	FIELD NAME	PROD	PURCHASER
8044704	07432	4225732149	103	DURHAM-KEMPNER NO 3	BOUNSVILLE (BCG)	252,0	LONE STAR GAS CO
8044705	07437	4247931939	103	T H MIDDLETON E NO 4	LAS TIENDAS E (OLMOS)	292,0	LONE STAR GAS CO
8044706	07438	4247931940	103	T H MIDDLETON E NO 5	LAS TIENDAS E (OLMOS)	175,0	LONE STAR GAS CO
*EXXON CORPORATION				RECEIVED: 07/07/80 JA: TX			
8044925	14476	4224730873	103	MRS AMK BASS 38-D 82944	KELSEY DEEP (6920)	300,0	TRUNKLINE GAS CO
*F B LACY				RECEIVED: 07/07/80 JA: TX			
8044908	13385	4228531278	102	BRUSHY CREEK UNIT 1 78306	BRUSHY CREEK (YEGUA 4700	0,0	TEXAS EASTERN TRANSM
*FITKIN OIL COMPANY				RECEIVED: 07/07/80 JA: TX			
8044949	15246	4223300000	108	OWNBEY #1	SHIRLEY CLEVELAND	14,0	NORTHERN NATURAL GAS
*FRANK CASS				RECEIVED: 07/07/80 JA: TX			
8044664	01369	4246100000	102	PROCTOR 21 NO 4 RRC NO 07692	CALVIN (DEAN)	54,8	EL PASO NATURAL GAS
*GAS DEVELOPMENT CORP				RECEIVED: 07/07/80 JA: TX			
8044687	06482	4241330708	103	EMMONS 82 WELL NO 1	ELDORADO SOUTH (CANYON)	110,0	NORTHERN NATURAL GAS
*GENE MARTIN				RECEIVED: 07/07/80 JA: TX			
8044766	11742	4217531085	102	E P TUMLINSON #1	BOMBA E (COOK MTN)	5,5	LO-VACA GATHERING CO
*GETTY OIL COMPANY				RECEIVED: 07/07/80 JA: TX			
8044770	11931	4208900000	103	B A JOHNSON C #1 #12225	SUBLIME (9200)	25,0	TENNESSEE GAS PIPELI
8044942	14851	4223330677	103	HERRING A NO 90	PANHANDLE	5,5	PANHANDLE EASTERN PI
8044703	07316	4236500000	108	O W ALEXANDER NO 1 ID #30147	CARTHAGE (PETTIT LO)	11,2	TEXAS GAS TRANSMISSI
*GRACE PETROLEUM CORPORATION				RECEIVED: 07/07/80 JA: TX			
8044909	13481	4224930950	103	STILZIG-ZYERNEMAN #9	AMARGOSA (2200)	144,0	NATURAL GAS PIPELINE
*GULF ENERGY PRODUCING COMPANY				RECEIVED: 07/07/80 JA: TX			
8044759	10859	4250500000	103	M R RAMIREZ #0-4	LOPENO (QUEEN CITY OIL)	36,0	TENNESSEE GAS PIPELI
*GULF OIL CORPORATION				RECEIVED: 07/07/80 JA: TX			
8044960	16852	4247932352	102	BRUNI MINERAL TRUST A NO 13	JUANITA (LOBO)	500,0	TENNESSEE GAS PIPELI
8044724	09209	4238930886	107	J FRUST WELL NO 15	WAHA WEST (ELLENBURGER)	350,0	TRANSWESTERN PIPELIN
*GUS EDWARDS CO				RECEIVED: 07/07/80 JA: TX			
8044974	19558	4204100000	102	ROYAL OAKS ESTATES UNIT NO 1	KURTEN (WOODBINE)	100,0	PRODUCERS GAS CO
*H C FEDERER				RECEIVED: 07/07/80 JA: TX			
8044950	15248	4217900000	108	NOEL #2 (TRRC ID NO 25706)	WEST PANHANDLE	4,2	GETTY OIL CO
8044951	15249	4217900000	108	NOEL NO 1	PANHANDLE	1,8	KERR MCGEE OIL CO
8044952	15250	4217900000	108	NOEL NO 3	PANHANDLE	1,8	KERR MCGEE OIL CO
8044953	15343	4223300000	108	WHITTENBURG NO 1	PANHANDLE-HUTCHINSON COU	0,1	GETTY OIL CO
*H V RISIEN				RECEIVED: 07/07/80 JA: TX			
8044701	07224	4224930796	103	VALADEZ ESTATE #7	MAGNOLIA CITY	96,0	TENNESSEE GAS TRANSM
*HNG OIL COMPANY				RECEIVED: 07/07/80 JA: TX			
8044725	09250	4238930983	102	TEXAS STATE 24 #1-A ID#78183	DOUBLE EAGLE (CASTILE)	477,0	INTRATEX GAS CO
*HOPKINS - POPE				RECEIVED: 07/07/80 JA: TX			
8044751	10590	4222100000	108	HOUSTON RANCH #2 RRC #71022	HOUSTON RANCH (STRAWN)	6,1	TEXAS UTILITIES FUEL
8044750	10589	4222100000	108	HOUSTON RANCH #3 RRC #71023	HOUSTON RANCH (STRAWN)	20,6	TEXAS UTILITIES FUEL
8044749	10588	4222100000	108	HOUSTON RANCH #4 RRC #70897	HOUSTON RANCH (STRAWN)	4,1	TEXAS UTILITIES FUEL
8044748	10587	4222100000	108	HOUSTON RANCH #9 RRC #70899	HOUSTON RANCH (STRAWN)	16,2	TEXAS UTILITIES FUEL
*HOWELL DRILLING INC				RECEIVED: 07/07/80 JA: TX			
8044959	16745	4212331006	102	EARL GARRETT GAS UNIT NO 1	GARRETT	175,0	
*HUGHES & HUGHES				RECEIVED: 07/07/80 JA: TX			
8044967	17614	4202531153	102	BILL WILSON GAS UNIT LSE NO 1	SINGLETON E (WILSON)	109,0	FERGUSON CROSSING PI
8044968	17615	4202531147	102	JUDITH MCMILLION MEALEY NO 1	MEALEY (PETTUS)	22,0	FERGUSON CROSSING PI
*8044958	16381	4235531418	102	THOMAS L BUSENLEHNER ET UX NO 1	COTTON (BUSENLEHNER)	109,5	UNITED TEXAS TRANSMI
*INTEGRAL ENERGY CORP				RECEIVED: 07/07/80 JA: TX			
8044938	14825	4248900000	103	PETROLEUM CO #1 82853	CHESS 44	400,0	TENNESSEE GAS PIPELI
*J CLEO THOMPSON				RECEIVED: 07/07/80 JA: TX			
8044937	14806	4210300000	108	MAGNOLIA NO 1 - 04212	MC ELROY	1,1	PHILLIPS PETROLEUM C
8044946	14913	4210300000	108	MAGNOLIA NO 10 - 04212	MC ELROY	1,2	PHILLIPS PETROLEUM C

VOLUME 247 PAGE 006

JD NO	JA DKT	API NO	SEC	WELL NAME	FIELD NAME	PROD	PURCHASER
8044939	14826	4210300000	108	MAGNOLIA NO 5 = 04212	MC ELROY	1,1	PHILLIPS PETROLEUM C
8044940	14827	4210300000	108	MAGNOLIA NO 7 = 04212	MCELROY	1,4	PHILLIPS PETROLEUM C
8044945	14912	4210300000	108	MAGNOLIA NO 9 = 04212	MC ELROY	0,0	PHILLIPS PETROLEUM C
*J M HUBER CORPORATION				RECEIVED: 07/07/80 JA: TX			
8044672	05105	4206500000	108	BURNETT R NO 37	PANHANDLE	10,5	GETTY OIL CO
8044673	05359	4223300000	108	BURNETT RF NO 1	PANHANDLE	6,7	PHILLIPS PETROLEUM C
8044674	05400	4223300000	108	HERRING-BURCH HERRING NO 59	PANHANDLE	1,2	COLORADO INTERSTATE
8044752	10600	4223300000	108	INGERTON NO 2 RC	PANHANDLE WEST	8,9	GETTY OIL CO
8044677	05719	4223300000	108	STATE B NO 37	PANHANDLE	0,3	GETTY OIL CO
8044678	05720	4223300000	108	STATE B NO 40	PANHANDLE	0,3	GETTY OIL CO
8044679	05735	4223300000	108	STATE B NO 42	PANHANDLE	0,3	GETTY OIL CO
8044676	05716	4223300000	108	STATE B NO 53	PANHANDLE	0,3	GETTY OIL CO
8044675	05712	4223300000	108	STATE B NO 8	PANHANDLE	0,3	GETTY OIL CO
*JACK L PHILLIPS				RECEIVED: 07/07/80 JA: TX			
8044764	11116	4216115496	108	F R HILL G U NO 1 15496	NAN SU GAIL (SUB-CLARKSV	14,0	TEXAS UTILITIES GAS
*JOSEPH G GIBSON				RECIEVED: 07/07/80 JA: TX			
8044776	12183	4224730861	102	A K EAST FEE NO 11-U	BLACK DIAMOND	112,0	
8044775	12182	4224730871	102	A K EAST FEE NO 12	BLACK DIAMOND	33,0	
*KOMANCHE OIL & GAS				RECEIVED: 07/07/80 JA: TX			
8044700	07191	4217900000	108	HEITHOLT 23271	WEST PANHANDLE	13,0	CITIES SERVICE CO
*MARSHALL EXPLORATION INC				RECEIVED: 07/07/80 JA: TX			
8044669	04512	4220300000	108	T J TAYLOR ESTATE #1-C 38147	WOODLAWN (RODESSA)	12,0	MISSISSIPPI RIVER TR
*MCCULLOCH OIL CORP OF TEXAS				RECEIVED: 07/07/80 JA: TX			
8044707	07679	4221130075	108	MATHERS RANCH NO 4	HUMPHREYS-DOUGLAS	18,0	ARKANSAS LOUISIANA G
*MITCHELL ENERGY CORPORATION				RECEIVED: 07/07/80 JA: TX			
8044668	04124	4249730109	108	FLOIS CRUMNOVER #2 52843	BOUNSVILLE BEND CONG	10,7	NATURAL GAS PIPELINE
8044782	12480	4249731425	103	G B FITZGERALD #3 81980	BOUNSVILLE (BEND CONGL G	150,0	NATURAL GAS PIPELINE
8044943	14843	4249731471	103	H J BEAVERS #9L 18509	ALVORD (ATOKA CONGL)	19,0	NATURAL GAS PIPELINE
8044912	13719	4200933598	103	R H FARMER #1 19374	MEGARGEL NORTH (MISS)	30,0	
*MURJO OIL & ROYALTY CO				RECEIVED: 07/07/80 JA: TX			
8044717	08604	4236700000	103	LAUD-GILBERT B #1	BRAZOS EAST (CADDO)	0,0	LONE STAR GAS CO
*NARBO FARMS				RECEIVED: 07/07/80 JA: TX			
8044902	12866	4230100000	108	HAMILL ELLIS WELL #2	WHEAT	6,0	PHILLIPS PETROLEUM C
*NATOMAS NORTH AMERICA INC				RECEIVED: 07/07/80 JA: TX			
8044670	04730	4246330582	103	MOORE #1-A	WHEELER PAN (HUNTON)	1087,0	EL PASO NATURAL GAS
*OMEGA MINERALS INC				RECEIVED: 07/07/80 JA: TX			
8044663	00460	4217500000	108	GERTRUDE HIGGS NO 1 #31419	KAREN BEAUCHAMP (2100)	11,0	UNITED GAS PIPE LINE
8044662	00459	4217500000	108	PAUL BETHKE NO 3 #02278	KAREN BEAUCHAMP (2100)	16,0	UNITED GAS PIPE LINE
*ORLA PETCO INC				RECEIVED: 07/07/80 JA: TX			
8044784	12551	4238900000	108	TXL HL LEASE RRC #17891 #4	FORD EAST (DELAWARE SAND	0,3	CONOCO INC
*ONL PETROLEUM CO				RECEIVED: 07/07/80 JA: TX			
8044926	14550	4228531235	103	ALICE HINZE NO 1	COLOVACA (MIOCENE 2100)	44,0	LONE STAR GAS CO
8044927	14551	4208930901	103	B E DAVIS B NO 2-T	OAKWOOD (3600)	66,5	LONE STAR GAS CO
8044928	14552	4208930908	103	B E DAVIS B NO 3	COLOVACA (MIOCENE 1900)	45,5	LONE STAR GAS CO
8044929	14553	4208931006	103	B E DAVIS B NO 4	OAKWOOD (3600)	65,0	LONE STAR GAS CO
8044930	14554	4208930988	103	KALLINA ET AL NO 1-C	OAKWOOD (3600)	60,0	LONE STAR GAS CO
8044931	14555	4208931011	103	KALLINA ET AL NO 3-T	OAKWOOD (3600)	21,0	LONE STAR GAS CO
8044934	14559	4228530698	103	OLDHAM LITTLE CHURCH B NO 1	PROVIDENT CITY (3530 EAS	56,0	LONE STAR GAS CO
8044935	14560	4228531233	103	OLDHAM LITTLE CHURCH B NO 3-T	PROVIDENT CITY (3530 EAS	77,0	LONE STAR GAS CO
8044933	14558	4228531247	103	OLDHAM LITTLE CHURCH NO 10	COLORALA (MIOCENE 2100)	43,0	LONE STAR GAS CO
8044932	14557	4208930928	103	OLDHAM LITTLE CHURCH NO 9	OAKWOOD (3600)	70,0	LONE STAR GAS CO
*PAN RESOURCES INC				RECEIVED: 07/07/80 JA: TX			
8044689	06798	4223300000	108	HAILE NO 1	PANHANDLE HUTCHINSON	1,7	GETTY OIL CO

VOLUME 247 PAGE 007

JD NO	JA DKT	API NO	SEC	* WELL NAME	FIELD NAME	PROD	PURCHASER
8044695	06806	4223300000	108	HAILE NO 5	PANHANDLE HUTCHINSON	1,7	GETTY OIL CO
8044694	06805	4223300000	108	HAILE NO 4	PANHANDLE HUTCHINSON	1,7	GETTY OIL CO
8044693	06804	4223300000	108	HAILE NO 5	PANHANDLE HUTCHINSON	1,7	GETTY OIL CO
8044691	06800	4223300000	108	HOLIFIELD-WHITTENBURG A NO 3	PANHANDLE HUTCHINSON	1,5	GETTY OIL CO
8044690	06799	4223300000	108	HOLIFIELD-WHITTENBURG A NO 4	PANHANDLE HUTCHINSON	1,5	GETTY OIL CO
8044692	06802	4223300000	108	HOLIFIELD-WHITTENBURG A NO 8	PANHANDLE HUTCHINSON	1,5	GETTY OIL CO
8044696	06807	4223300000	108	WHITTENBURG J NO 1	PANHANDLE HUTCHINSON	3,5	GETTY OIL CO
*PAR OIL CORPORATION				RECEIVED: 07/07/80 JA: TX			
8044963	16989	4221330246	102	PAR OIL CORPORATION-LITTLE NO 2	TRINIDAD SOUTH (RUDESSA)	865,0	UNITED GAS PIPE LINE
*PENNZOIL PRODUCING COMPANY				RECEIVED: 07/07/80 JA: TX			
8044962	16935	4235531410	102	IRENE H WALTON NO B 4-F	AGUA DULCE	200,0	UNITED GAS PIPE LINE
*PHILCON DEVELOPMENT CO				RECEIVED: 07/07/80 JA: TX			
8044965	17261	4248330623	102	ZYBACH #1	BUFFALO WALLOW EAST (A C	1,5	EL PASO NATURAL GAS
*PHILLIPS PETROLEUM COMPANY				RECEIVED: 07/07/80 JA: TX			
8044954	15428	4213508523	108	(20149) BLOCK 11 DEVONIAN UNIT NO *	BLOCK 11 (DEVONIAN)	11,0	EL PASO NATURAL GAS
8044955	15431	4213503183	108	(21193) GOLDSMITH ANDECTOR UNIT NO*	GOLDSMITH (CLEARFORK)	16,0	EL PASO NATURAL GAS
8044973	18778	4236530971	102	MAUDE 2 NO 2	CARTHAGE	300,0	UNITED GAS PIPE LINE
*RIAL OIL COMPANY				RECEIVED: 07/07/80 JA: TX			
8044936	14748	4203330519	103	SHORTES NO 1 #62504	ACKERLY (DEAN SAND)	27,7	TEXACO INC
*SECO PRODUCTION CO				RECEIVED: 07/07/80 JA: TX			
8044897	06878	4238300000	108	ROBEY #3 #05811	CALVIN (DEAN)	4,4	ALLIED CHEMICAL CORP
*SHAR-ALAN OIL CO				RECEIVED: 07/07/80 JA: TX			
8044765	11674	4221513984	108	H E WILCOX 1	SAN SALVADOR FIELD (6500	0,0	TENNESSEE GAS PIPELI
*SHELL OIL CO				RECEIVED: 07/07/80 JA: TX			
8044906	13317	4221530897	103	A A MCALLEN NO 55	MCALLEN RANCH (VICKSBURG	450,0	SOUTH TEXAS NATURAL
8044907	13318	4221530877	103	A A MCALLEN NO 57	MCALLEN RANCH (VICKSBURG	250,0	SOUTH TEXAS NATURAL
8044961	016901	4242731278	103	BENTSEN BROS B NO 10	LACOPITA (VICKSBURG Z SW	140,0	TENNESSEE GAS PIPELI
8044779	12350	4216531491	103	NEWBERN -A- NO 2	ROBERTSON	8,0	PHILLIPS PETROLEUM C
8044666	01440	4216530626	103	NEWBERN 8	ROBERTSON N (SAN ANDRES)	18,5	PHILLIPS PETROLEUM C
8044753	10675	4250131620	103	OWNBY SAN ANDRES UNIT NO 54	OWNBY	16,8	AMOCO PRODUCTION CO
8044754	10677	4250131582	103	OWNBY SAN ANDRES UNIT NO 56	OWNBY	71,1	AMOCO PRODUCTION CO
8044755	10678	4250131619	103	OWNBY SAN ANDRES UNIT NO 57	OWNBY	25,9	AMOCO PRODUCTION CO
8044756	10679	4250131583	103	OWNBY SAN ANDRES UNIT NO 58	OWNBY	98,5	AMOCO PRODUCTION CO
8044757	10680	4250131600	103	OWNBY SAN ANDRES UNIT NO 59	OWNBY	14,6	AMOCO PRODUCTION CO
8044665	01424	4247530913	103	SEALY SMITH FOUNDATION 149	MONAHANS (CLEARFORK)	21,0	EL PASO NATURAL GAS
8044780	12351	4216531579	103	STARK T O NO 26	ROBERTSON N (SAN ANDRES)	7,5	PHILLIPS PETROLEUM C
*SMITH PETROLEUM CO				RECEIVED: 07/07/80 JA: TX			
8044971	17997	4215731000	102	ANDREW WALZEL NO 2	TAVENER (YEGUA 7600)	400,0	LONE STAR GAS CO
8044947	14948	4215700000	102	ANDREW WALZEL UNIT #1	TAVENER (COOK MOUNTAIN 7	1100,0	LONE STAR GAS CO
8044948	14949	4215700000	102	WILBUR MIKESKA UNIT NO 1	TAVENER (FRIO 5100)	200,0	LONE STAR GAS CO
*SUE-ANN OPERATING COMPANY				RECEIVED: 07/07/80 JA: TX			
8044767	11810	4248131725	102	VINEYARD B NO 1-C 82202	JUANITA (MARG)	0,5	UNITED GAS PIPE LINE
*TAYLOR BROTHERS				RECEIVED: 07/07/80 JA: TX			
8044688	06507	4242130050	103	75711 - MITCH & MITZIE NO 1	TEXAS HUGOTON	180,0	PHILLIPS PETROLEUM C
*TENNECO OIL COMPANY				RECEIVED: 07/07/80 JA: TX			
8044702	07278	4217930576	103	COMBS NO 167	PANHANDLE GRAY	9,0	PHILLIPS PETROLEUM C
8044667	01561	4219535648	108	LULA K JACKSON #6	MITCHLAND-BERNSTEIN	7,3	PANHANDLE EASTERN PI
*TERMO CO OF TEXAS				RECEIVED: 07/07/80 JA: TX			
8044941	14828	4204903205	103	HICKMAN 1-A	BROWN COUNTY REGULAR (MA	70,0	ODESSA NATURAL GASOL
*TEXACO INC				RECEIVED: 07/07/80 JA: TX			
8044969	17802	4224730973	102	A R EAST #14	BLACK DIAMOND EAST (PETT	54,8	LO VACA GATHERING CO
8044728	10038	4235700000	108	C D CONNER NO 3	FARNSWORTH	3,7	DIAMOND SHAMROCK COR
8044918	14263	4236530604	103	LIZZIE BURNS ET AL #2L	BETHANY EAST (COTTON VAL	130,0	UNITED GAS PIPE LINE

VOLUME 247 PAGE 008

JD NO	JA DKT	API NO	SEC	* WELL NAME	FIELD NAME	PROD	PURCHASER
8044919	14264	4236530604	103	LIZZIE BURNS ET AL #20	BETHANY (TRAVIS PEAK)	100.0	UNITED GAS PIPE LINE
8044727	10036	4206500000	108	M C BURNETT NCT-3 #13	PANHANDLE	15.8	PHILLIPS PETROLEUM C
8044972	18111	4208130810	102	MARCH RANCH NO 10	HIGGINS RANCH (CANYON)	165.3	LONE STAR GAS CO
8044920	14266	4236530629	103	T C ADAMS NCT-1 #42	BETHANY (TRAVIS PEAK)	750.0	UNITED GAS PIPE LINE
*THE SUPERIOR OIL COMPANY				RECEIVED: 07/07/80 JA: TX			
8044777	12198	4247932005	102	DANIEL FLORES 2	WILDCAT	0.0	
*THOMAS C CANAN				RECEIVED: 07/07/80 JA: TX			
8044769	11928	4242900000	108	CARL FAMBROUGH NO 1 NO 60029	WAYLAND FIELD	1.9	LONE STAR GAS CO
8044768	11926	4242900000	108	TRACEY NO 2 RRC NO 71048	WAYLAND FIELD	24.0	SOUTHWESTERN GAS PIP
*TRAVELERS OIL CO O-V PROJECT				RECEIVED: 07/07/80 JA: TX			
8044711	08083	4217900000	103	COLEBANK #2 04500	PANHANDLE - GRAY COUNTY	0.0	
*TRIPPLEHORN GAS CO				RECEIVED: 07/07/80 JA: TX			
8044771	12027	4217900000	108	J B BORERS #1	PANHANDLE WEST	9.0	PHILLIPS PETROLEUM C
*TRIPPLEHORN OIL CO				RECEIVED: 07/07/80 JA: TX			
8044772	12041	4217900000	108	J B BORERS #4	PANHANDLE	12.0	PHILLIPS PETROLEUM C
8044773	12043	4223300000	108	R C WARE NO 10	PANHANDLE - HUTCHINSON	1.8	GETTY OIL CO
8044774	12044	4223300000	108	R C WARE NO 11	PANHANDLE	1.8	GETTY OIL CO
*U S RESOURCES INC				RECEIVED: 07/07/80 JA: TX			
8044718	08914	4228730197	103	HERMAN MENZEL #1	GIDDINGS (AUSTIN CHALK)	20.0	PGP GAS PRODUCTS INC
*UNION OIL COMPANY OF CALIF				RECEIVED: 07/07/80 JA: TX			
8044758	10703	4239330682	103	CAROLINE KILLEBREW #1-209	CARRIE KILLEBREW (MORROW	3.7	NORTHERN NATURAL GAS
*W M GALLAHAY				RECEIVED: 07/07/80 JA: TX			
8044699	07185	4233130046	108	M L WALLER JR LEASE WELL NO 1	JORDAN/NAVARRO B	2.8	PRODUCERS GAS CO
*WALSH AND WATTS INC				RECEIVED: 07/07/80 JA: TX			
8044722	009061	4215300000	108	MOSS #6 02470	HARPER	1.0	PHILLIPS PETROLEUM C
*WARREN PETR CO A DIV OF GULF OIL CO				RECEIVED: 07/07/80 JA: TX			
8044917	14087	4210330064	108	M F HENDERSON TR M NO 154	WADDELL	3.0	EL PASO NATURAL GAS
8044916	14086	4210300000	108	M F HENDERSON TR M NO 61	WADDELL	2.0	EL PASO NATURAL GAS
8044914	14084	4210300000	108	STATE EG NO 9	DUNE	1.0	EL PASO NATURAL GAS
8044915	14085	4210300000	108	STATE LB NO 4	DUNE	1.0	EL PASO NATURAL GAS
*WILLARD OIL & GAS INC				RECEIVED: 07/07/80 JA: TX			
8044715	08499	4223300000	103	KILLOUGH A-2 #04137	PANHANDLE	28.8	PHILLIPS PETROLEUM C
8044714	08496	4223300000	103	KILLOUGH B-5 #04176	PANHANDLE	43.2	PHILLIPS PETROLEUM C
8044713	08495	4223300000	103	KILLOUGH B-6 #04176	PANHANDLE	45.6	PHILLIPS PETROLEUM C
8044712	08494	4223300000	103	KILLOUGH B-7 #04176	PANHANDLE	25.2	PHILLIPS PETROLEUM C
*WM GRUENERWALD & ASSOC INC				RECEIVED: 07/07/80 JA: TX			
8044698	06937	4234100000	103	MASTERSON M#13K 03947	PANHANDLE (RED CAVE)	71.7	COLORADO INTERSTATE

OTHER PURCHASERS

8044682 COLTEXO CORP
8044778 NORTHERN NATURAL GAS CO
8044781 NORTHERN NATURAL GAS CO
8044958 HOUSTON P L CO

[FR Doc 80-23767 Filed 8-5-80; 8 45 am]

BILLING CODE 6450-85-C

[Vol. 248]

Determinations by Jurisdictional Agencies Under the Natural Gas Policy Act of 1978

Issued July 31, 1980.

The Federal Energy Regulatory Commission received notices of determination from the jurisdictional agencies listed herein, for the indicated wells, pursuant to the Natural Gas Policy Act of 1978 and 18 CFR 274.104. Negative determinations are indicated by a (D) in the DEN column. Estimated annual production is in million cubic feet (MMcf).

The applications for determination in these proceedings together with a copy or description of other materials in the record on which such determinations were made are available for inspection, except to the extent such material is treated as confidential under 18 CFR 275.206, at the Commission's Office of Public Information, Room 1000, 825 North Capitol Street, N.E., Washington, D.C. 20426.

Persons objecting to any of these final determinations may, in accordance with 18 CFR 275.203 and 18 CFR 275.204, file a protest with the Commission on or before August 21, 1980.

Please reference the FERC Control Number in all correspondence related to these determinations.

Kenneth F. Plumb,

Secretary.

BILLING CODE 6450-85-M

UNITED STATES OF AMERICA
FEDERAL ENERGY REGULATORY COMMISSION

VOLUME 248

NOTICE OF DETERMINATIONS
BY JURISDICTIONAL AGENCIES UNDER
THE NATURAL GAS POLICY ACT OF 1978

JD NO	JA DKT	API NO	SEC	WELL NAME	FIELD NAME	PROD	PURCHASER
CALIFORNIA DEPARTMENT OF CONSERVATION							
*GENERAL AMERICAN OIL COMPANY OF TEX				RECEIVED: 07/08/80 JA: CA			
8045057	80-5-0001	0403920023	103	GENERAL AMERICAN NO 3	HOFFAT RANCH	73.0	
KANSAS CORPORATION COMMISSION							
*TEXAS OIL & GAS CORP				RECEIVED: 07/08/80 JA: KS			
8045061	K-79-1999	1512920388	102	BARKER A #1 (LOWER)	WILDCAT	120.0	PANHANDLE EASTERN PI
LOUISIANA OFFICE OF CONSERVATION							
*GEORGE R SCHURMAN				RECEIVED: 07/02/80 JA: LA			
8045030	80-1960	1704920112	102	STEWART #1	NORTHEAST HODGE	730.0	LOUISIANA GAS INTRAS
8045031	80-1961	1704920116	102	STEWART #2	NORTHEAST HODGE	0.0	LOUISIANA GAS INTRAS
*GULF OIL CORPORATION				RECEIVED: 07/02/80 JA: LA			
8045029	80-1534	1707522590	102	J S ABERCRUMBIE NO 8	BASTIAN BAY	2482.0	TEXAS EASTERN TRANSM
NEW MEXICO DEPARTMENT OF ENERGY & MINERALS							
*ALPHA TWENTY-ONE PRODUCTION CO				RECEIVED: 07/07/80 JA: NM			
8045050		3002526664	103	EL PASO SMITH NO 1	JALMAT	128.0	EL PASO NATURAL GAS
*AMERADA HESS CORPORATION				RECEIVED: 07/08/80 JA: NM			
8045039		3003900000	108	D HARVEY STATE #2	UTERO	16.1	GAS CO OF NEW MEXICO
*EL PASO NATURAL GAS COMPANY				RECEIVED: 07/08/80 JA: NM			
8045042		3004513115	108	BRUINGTON #4	BASIN-DAKOTA GAS	18.0	EL PASO NATURAL GAS
*8045041		3003908102	108	CANYON LARGO UNIT #139	UTERO-CHACRA GAS	20.0	EL PASO NATURAL GAS
8045044		3003907047	108	HINCON UNIT #21	BLANCO-MESAVERDE GAS	20.0	EL PASO NATURAL GAS
8045040		3003907983	108	SAN JUAN 32-5 UNIT #10	BLANCO-MESAVERDE GAS	22.0	EL PASO NATURAL GAS
*SUPRON ENERGY CORPORATION				RECEIVED: 07/08/80 JA: NM			
8045043		3004523532	103	MINS STATE COM 1-A	BLANCO PICTURED-CLIFFS	130.0	SOUTHERN UNION GATHE
OKLAHOMA CORPORATION COMMISSION							
*AL MCCORD INC				RECEIVED: 07/07/80 JA: OK			
8044997	04442	3509321624	103	ALVEY #1 - 23	HENO - RINGWOOD	20.0	PIONEER GAS PRODUCTS
8044984	04437	3509321620	103	ARTHUR #1 - 19	HENO - RINGWOOD	68.0	PIONEER GAS PRODUCTS
8044995	04443	3509321625	103	HAYS #1 - 23	HENO-RINGWOOD	26.0	PIONEER GAS PRODUCTS
8044983	04438	3509321621	103	HELENA #1-19	HENO-RINGWOOD	51.0	PIONEER GAS PRODUCTS
8044985	04436	3507322177	103	KRUSE #1	EAST LOYAL	90.0	CITIES SERVICE GAS C
8044996	04440	3509321622	103	O E WOLF #1-20	HENO - RINGWOOD	34.0	PIONEER GAS PRODUCTS
*ANDOVER OIL COMPANY				RECEIVED: 07/07/80 JA: OK			
8045028	04480	3501721179	102	FLOYD MILLER #31-1	WILDCAT	180.0	DELHI GAS PIPELINE C

VOLUME 248 PAGE 002

JD NO	JA DKT	API NO	SEC	WELL NAME		FIELD NAME	PROD	PURCHASER
*ARCO OIL AND GAS COMPANY				RECEIVED: 07/07/80 JA: OK				
8044991	00973	3500721269	103	ASA C HENDRICKS #2		BEAVER	219,0	MICHIGAN WISCONSIN P
8045005	00972	3500721315	103	R FADES UNIT #2		HOCANE	182,5	MICHIGAN WISCONSIN P
*BERRY PETROLEUM CORP				RECEIVED: 07/07/80 JA: OK				
*8044998	04441	3509321584	103	KATZLAFF #9-1		BOUNER TREND	150,0	UNION TEXAS PETROLEU
*CHASE EXPLORATION CORP				RECEIVED: 07/07/80 JA: OK				
*8044981	04425	3507121034	103	CURFMAN #1-6		SEC 6 TWN 28 N RANGE 2E	25,1	CITIES SERVICE GAS C
*8044978	04420	3507121165	103	HONICK #1-3		C NE/4 SE/4 SEC 3 TWN 27	5,8	CITIES SERVICE GAS C
*8044977	04422	3507121606	103	JOHNS #2-24		C NW/4 SEC 24 TWN 28N 1E	23,7	CITIES SERVICE GAS C
*8044980	04418	3507121197	103	KUCERA #1-8		SEC 8 TWN 27 N	10,9	CITIES SERVICE GAS C
*8044975	04426	3507121617	103	HOUSEY #1-26		SEC 26 TWN 29N 1E	894,2	CITIES SERVICE GAS C
*8044976	04423	3507121475	103	SCHULZ #1-35		SEC 35 TWN 28N 1E	42,3	CITIES SERVICE GAS C
*8044979	04419	3507121473	103	SIMONER #1-17		SEC 17 TWN 27 N RANGE 1E	13,2	CITIES SERVICE GAS C
*8044982	04424	3507121639	103	WOOD #2-31		SEC 31 TWN 28N R 2E	29,2	CITIES SERVICE GAS C
*COTTON PETROLEUM CORPORATION				RECEIVED: 07/07/80 JA: OK				
8044994	04444	3505920801	103	HAYES C NO I		BOILING SPRINGS	220,0	DELHI GAS PIPELINE C
*DAVIS OIL COMPANY				RECEIVED: 07/07/80 JA: OK				
8045014	04433	3501120760	103	BURNS NO 1		SQUAW CREEK	37,0	OKLAHOMA GAS AND ELE
8045010	04430	3501120759	103	P & D NO 1		ELM GROVE	100,0	OKLAHOMA NATURAL GAS
8045011	04431	3501120808	103	TRUMBLEY NO 1		ELM GROVE	135,0	OKLAHOMA NATURAL GAS
*F C D LTD				RECEIVED: 07/07/80 JA: OK				
8044999	04458	3507322210	103	STATE 16-1		EAST LACEY	0,0	PHILLIPS PETROLEUM C
*GENERAL AMERICAN OIL COMPANY OF TEX				RECEIVED: 07/07/80 JA: OK				
8045004	00927	3513721910	103	SPEARS 20		SHU-VEL-TUM	128,0	GETTY OIL CO
*J M HUBER CORPORATION				RECEIVED: 07/07/80 JA: OK				
8045016	04473	3504520734	103	GRANTHAM NO 2		SOUTHEAST GAGE	10,0	ONG WESTERN INC
8045017	04474	3504520736	103	GRANTHAM NO 25-2		SOUTHEAST GAGE	16,0	ONG WESTERN INC
*JORDAN OIL & GAS COMPANY				RECEIVED: 07/07/80 JA: OK				
8045024	04353	3504520767	103	FRITZLER ESTATE NO 1		HIGGINS SOUTH	180,0	NORTHERN NATURAL GAS
*KAISER-FRANCIS OIL COMPANY				RECEIVED: 07/07/80 JA: OK				
8045009	03607	3501721069	102	COFFEY B #1		N W CALUMET	310,0	DELHI GAS PIPELINE C
*L E JONES PRODUCTION COMPANY				RECEIVED: 07/07/80 JA: OK				
8045000	04462	3501921881	103	HALL-COLINE NO 1		KELLER	0,0	
*MAJORS PRODUCTION CO				RECEIVED: 07/07/80 JA: OK				
8045008	00791	3506300000	103	D MEADORS NO 1		SECTION 19-9N-10E	22,8	OKLAHOMA NATURAL GAS
*MUSTANG PRODUCTION CO.				RECEIVED: 07/07/80 JA: OK				
*8044993	04447	3512120591	103	BERRY #1-29		WILBURTON	70,0	OKLAHOMA GAS & ELECT
*8044992	04448	3507920287	103	BLAIR #1-11		BOKOSHE	100,0	OKLAHOMA GAS & ELECT
*OKIE OIL INC				RECEIVED: 07/07/80 JA: OK				
8045007	04059	3511900000	108	D STATE C - 1		WEST GEORGIA	0,0	SUN GAS CO
*OKLAHOMA PETROLEUM MANAGEMENT CORP				RECEIVED: 07/07/80 JA: OK				
8044989	03507	3508120809	103	WOTIPKA #1		NORTH AGRA	219,0	COLORADO GAS COMPRES
*PACIFIC OIL & GAS CO				RECEIVED: 07/07/80 JA: OK				
8044990	01120	3509321549	103	SCHOOL LAND NO 2		BADO	250,0	PHILLIPS PETROLEUM C
*PRODUCTION OIL CORP				RECEIVED: 07/07/80 JA: OK				
8045022	04181	3510521806	103	BILL SHARP #12		NORTH CHILDERS	16,4	CITIES SERVICE GAS
8045023	04343	3510521708	103	JOE STEWART 10		NORTH CHILDERS	16,4	CITIES SERVICE GAS C
8045018	04179	3510521509	103	MAC STEWART 3		NORTH CHILDERS	16,4	CITIES SERVICE GAS C
8045019	04191	3510521428	103	MATTHEWS #1		EAST LENAPAH	16,4	CITIES SERVICE GAS C
8045021	04186	3510521502	103	W W CHOUTEAU #1		EAST LENAPAH FIELD	16,4	CITIES SERVICE GAS C
8045020	04189	3510521545	103	W W CHOUTEAU #5		EAST LENAPAH	16,4	CITIES SERVICE GAS C
*RONALD LEE MCCUTCHIN				RECEIVED: 07/07/80 JA: OK				
8045025	04479	3510720576	103	BESSIE SEAT #1		SEC 35 TOWNSHIP 12N RANG	365,0	PUBLIC SERVICE CO OF

VOLUME 248 PAGE 003

JD NO	JA DKT	API NO	SEC	WELL NAME	FIELD NAME	PROD	PURCHASER
8045027	04478	3510720607	103	MAXWELL #1	SECT 4 TOWNSHIP 11N RANG	365,0	PUBLIC SERVICE CO OF
*S K TUTHILL & B J BARBEE				RECEIVED: 07/07/80 JA: OK			
8045006	00541	3515300000	103	D WALKER #1-31	SE FAIRVALLEY	300,0	PANHANDLE EASTERN PI
*SOUTHERN UNION EXPLORATION COMPANY				RECEIVED: 07/07/80 JA: OK			
8045026	04510	3513520075	102	HAWKINS #1	WILDCAT	730,0	ARKANSAS LOUISIANA G
8045026	04510	3513520075	103	HAWKINS #1	WILDCAT	730,0	ARKANSAS LOUISIANA G
*TENNECO OIL CO				RECEIVED: 07/07/80 JA: OK			
8044986	00182	3515120771	103	KEFFER #2-5	OAKDALE N	145,6	PANHANDLE EASTERN PI
*TENNECO OIL EXPLORATION AND PRODUCT				RECEIVED: 07/07/80 JA: OK			
8044987	00181	3515320866	103	SHORELINE #2-34	CHESTER W	15,6	NATURAL GAS PIPELINE
*TEXAS PACIFIC OIL COMPANY INC				RECEIVED: 07/07/80 JA: OK			
8045003	04469	3501721166	103	HALL 2-27	WATONGA TREND (RED FORK)	28,0	CITIES SERVICE GAS C
*TRANSIERRA EXPLORATION CORP				RECEIVED: 07/07/80 JA: OK			
8045001	04459	3504722011	103	PAUL MARINER NO 1	GARBER	182,0	ARCO OIL & GAS CO
8045002	04460	3504721993	103	STATE SCHOOL LAND NO 1	GARBER	182,0	ARCO OIL & GAS CO
*UNION TEXAS PETROLEUM				RECEIVED: 07/07/80 JA: OK			
8044988	00045	3504721300	103	F ANDERSON NO 2	WAUKOMIS SH	72,0	PANHANDLE EASTERN PI
*UNIVERSAL RESOURCES CORPORATION				RECEIVED: 07/07/80 JA: OK			
8045015	04435	3508321160	103	FLASCH 2-2	RUSSELL	190,0	
8045012	04429	3501721048	103	KRSHKA #2-8	HIGHLAND NORTHWEST	100,0	CONOCO INC
8045013	04432	3501721304	103	MERVELDT #6-35	PIEDMONT WEST	350,0	DELHI GAS PIPELINE C

****

WEST VIRGINIA DEPARTMENT OF MINES

****

*ALLEGHENY LAND & MINERAL COMPANY				RECEIVED: 07/07/80 JA: WV			
8045239		4709701992	103	A-520	MEADE DISTRICT	0,0	COLUMBIA GAS TRANSMI
8045211		4703300916	108	A-538	SANDIS DISTRICT	0,0	CONSOLIDATED GAS SUP
8045095		4703302073	103	A-753	SANDIS DISTRICT	0,0	CONSOLIDATED GAS SUP
8045090		4703302207	103	A-776	SANDIS DISTRICT	0,0	CONSOLIDATED GAS SUP
8045253		4700101076	103	A-782	UNION DISTRICT	0,0	CONSOLIDATED GAS SUP
8045088		4703302172	103	A-787	SANDIS DISTRICT	0,0	CONSOLIDATED GAS SUP
8045242		4709101944	103	A-788	KNOTTSVILLE DISTRICT	0,0	CONSOLIDATED GAS SUP
8045246		4703302058	103	A-799	TEN MILE DISTRICT	0,0	CONSOLIDATED GAS SUP
8045240		4709701935	103	A-807	WASHINGTON DISTRICT	0,0	COLUMBIA GAS TRANSMI
8045243		4707700201	103	A-808	VALLEY DISTRICT	0,0	CONSOLIDATED GAS SUP
8045245		4703302085	103	A-809	SANDIS DISTRICT	0,0	CONSOLIDATED GAS SUP
8045089		4704102665	103	A-821	HACKERS CREEK DISTRICT	0,0	CONSOLIDATED GAS SUP
8045244		4703302091	103	A-822	EAGLE DISTRICT	0,0	CONSOLIDATED GAS SUP
8045235		4709701984	103	A-827	WASHINGTON DISTRICT	0,0	CONSOLIDATED GAS SUP
8045237		4709701955	103	A-830	UNION DISTRICT	0,0	CONSOLIDATED GAS SUP
8045241		4709700183	103	A-833	UNION DISTRICT	0,0	CONSOLIDATED GAS SUP
8045236		4709701966	103	A-835	WASHINGTON DISTRICT	0,0	CONSOLIDATED GAS SUP
8045187		4700701423	103	A-836	SALT LICK DISTRICT	0,0	CONSOLIDATED GAS SUP
8045238		4709701995	103	A-846	WASHINGTON DISTRICT	0,0	COLUMBIA GAS TRANSMI
8045234		4709702002	103	A-850	WASHINGTON DISTRICT	0,0	CONSOLIDATED GAS SUP
8045212		4703300073	108	C U ROBINSON A-337	EAGLE DISTRICT	14,0	CONSOLIDATED GAS SUP
*ASHLAND EXPLORATION INC				RECEIVED: 07/07/80 JA: WV			
8045162		4710900723	108	W H RITTER LUMBER CO #217	LOGAN WYOMING	20,1	CONSOLIDATED GAS SUP
*CITIES SERVICE COMPANY				RECEIVED: 07/07/80 JA: WV			
8045209		4701702118	108	BLAND A #1	SMITHBURG	5,2	CONSOLIDATED GAS SUP
8045208		4701702119	108	BLAND A #2	SMITHBURG	4,6	CONSOLIDATED GAS SUP
8045207		4701702121	108	CHAPMAN A #2	SMITHBURG	7,5	CONSOLIDATED GAS SUP
8045206		4701702122	108	JONES J #1	SMITHBURG	3,9	CONSOLIDATED GAS SUP
8045205		4701702126	108	MAXWELL A #10	SMITHBURG	1,2	CONSOLIDATED GAS SUP

VOLUME 248 PAGE 004

JD NO	JA DKT	API NO	SEC	WELL NAME	FIELD NAME	PROD	PURCHASER
8045204		4701702127	108	MAXWELL A #11	SMITHBURG	2.0	CONSOLIDATED GAS SUP
8045203		4701702130	108	MAXWELL A #20	SMITHBURG	0.4	CONSOLIDATED GAS SUP
8045202		4701702131	108	MAXWELL A #21	SMITHBURG	3.2	CONSOLIDATED GAS SUP
8045201		4701702132	108	MAXWELL A #23	SMITHBURG	3.1	CONSOLIDATED GAS SUP
8045256		4701702133	108	MAXWELL A #26	SMITHBURG	5.4	CONSOLIDATED GAS SUP
8045255		4701702134	108	MAXWELL A #29	SMITHBURG	3.2	CONSOLIDATED GAS SUP
8045254		4701702135	108	MAXWELL A #38	SMITHBURG	5.5	CONSOLIDATED GAS SUP
8045253		4701702136	108	MAXWELL A #45	SMITHBURG	2.5	CONSOLIDATED GAS SUP
8045252		4701702137	108	MAXWELL A #46	SMITHBURG	1.9	CONSOLIDATED GAS SUP
8045251		4701702138	108	MAXWELL A #47	SMITHBURG	0.9	CONSOLIDATED GAS SUP
8045250		4701702139	108	MAXWELL A #50	SMITHBURG	4.2	CONSOLIDATED GAS SUP
8045249		4701702140	108	MAXWELL A #53	SMITHBURG	11.2	CONSOLIDATED GAS SUP
8045248		4701702141	108	MAXWELL A #54	SMITHBURG	11.8	CONSOLIDATED GAS SUP
8045175		4701702142	108	MAXWELL A #56	SMITHBURG	3.7	CONSOLIDATED GAS SUP
8045247		4701702143	108	MAXWELL A #59	SMITHBURG	7.8	CONSOLIDATED GAS SUP
8045182		4701702145	108	MAXWELL B #12	SMITHBURG	8.5	CONSOLIDATED GAS SUP
8045181		4701702146	108	MAXWELL B #13	SMITHBURG	3.2	CONSOLIDATED GAS SUP
8045180		4701702148	108	MAXWELL B #18	SMITHBURG	7.4	CONSOLIDATED GAS SUP
8045183		4701702144	108	MAXWELL B #9	SMITHBURG	3.6	CONSOLIDATED GAS SUP
8045179		4701702149	108	MAXWELL C #1	SMITHBURG	3.1	CONSOLIDATED GAS SUP
8045176		4701702152	108	MAXWELL C #10	SMITHBURG	0.4	CONSOLIDATED GAS SUP
8045128		4701702153	108	MAXWELL C #11	SMITHBURG	2.5	CONSOLIDATED GAS SUP
8045177		4701702150	108	MAXWELL C #3	SMITHBURG	6.1	CONSOLIDATED GAS SUP
8045178		4701702151	108	MAXWELL C #4	SMITHBURG	4.9	CONSOLIDATED GAS SUP
8045131		4701702157	108	MAXWELL D #19	SMITHBURG	7.1	CONSOLIDATED GAS SUP
8045129		4701702154	108	MAXWELL D #3	SMITHBURG	7.8	CONSOLIDATED GAS SUP
8045130		4701702155	108	MAXWELL D #5	SMITHBURG	8.2	CONSOLIDATED GAS SUP
8045132		4703902947	108	VICKERS A #2	COLBON 6	4.2	CONSOLIDATED GAS SUP
8045133		4703902948	108	VICKERS A #6	COLBON 6	2.2	CONSOLIDATED GAS SUP
8045096		4703902949	108	VICKERS A #7	COLBON 6	2.2	CONSOLIDATED GAS SUP
8045134		4703902950	108	VICKERS A #8	COLBON 6	1.0	CONSOLIDATED GAS SUP
8045135		4703902951	108	VICKERS A #9	COLBON 6	1.8	CONSOLIDATED GAS SUP
*D A DORWARD				RECEIVED: 07/07/80 JA: MV			
8045163		4702101573	108	R G COLLINS #1	GLENVILLE	0.0	CONSOLIDATED GAS SUP
*DEVON CORPORATION				RECEIVED: 07/07/80 JA: MV			
8045171		4704501049	108	W 13 DINGESS RUM COAL CO #6	LOGAN	0.5	COLUMBIA GAS TRANSMI
8045228		4704501060	108	W 2 GUYAN MERCANTILE #1	LOGAN	4.0	COLUMBIA GAS TRANSMI
8045168		4704501052	108	W 20 DINGESS RUM COAL CO #15	LOGAN	7.0	COLUMBIA GAS TRANSMI
8045232		4704501056	108	W 24 DINGESS RUM COAL CO #16	LOGAN	4.0	COLUMBIA GAS TRANSMI
8045226		4704501065	108	W 27 DINGESS RUM COAL CO #20	LOGAN	1.0	COLUMBIA GAS TRANSMI
8045122		4704501063	108	W 7 YAWKEY-FREEMAN #2	LOGAN	1.0	COLUMBIA GAS TRANSMI
8045172		4704501048	108	W15 DINGESS RUM COAL CO #8	LOGAN	3.0	COLUMBIA GAS TRANSMI
8045173		4704501047	108	W16 DINGESS RUM COAL CO #9	LOGAN	6.0	COLUMBIA GAS TRANSMI
8045174		4704501046	108	W17 DINGESS RUM COAL CO #10	LOGAN	2.0	COLUMBIA GAS TRANSMI
8045225		4704501066	108	W18 DINGESS RUM COAL CO #11	LOGAN	1.0	COLUMBIA GAS TRANSMI
8045169		4704501051	108	W19 DINGESS RUM COAL CO #12	LOGAN	7.0	COLUMBIA GAS TRANSMI
8045165		4704501055	108	W21 DINGESS RUM COAL CO #14	LOGAN	5.0	COLUMBIA GAS TRANSMI
8045231		4704501057	108	W24 DINGESS RUM COAL CO #17	LOGAN	4.0	COLUMBIA GAS TRANSMI
8045167		4704501053	108	W25 DINGESS RUM COAL CO #18	LOGAN	2.0	COLUMBIA GAS TRANSMI
8045170		4704501050	108	W26 DINGESS RUM COAL CO #19	LOGAN	0.5	COLUMBIA GAS TRANSMI
8045227		4704501064	108	W29 DINGESS RUM COAL CO #22	LOGAN	3.0	COLUMBIA GAS TRANSMI
8045224		4704501067	108	W30 DINGESS RUM COAL CO #23	LOGAN	6.0	COLUMBIA GAS TRANSMI
8045166		4704501054	108	W31 DINGESS RUM COAL CO #24	LOGAN	4.0	COLUMBIA GAS TRANSMI

VOLUME 248 PAGE 005

JD NO	JA DKT	API NO	SEC	# WELL NAME	FIELD NAME	PROD	PURCHASER
8045121		4704501061	108	W33 DINGESS RUM COAL CO #26	LOGAN	1,0	COLUMBIA GAS TRANSMI
8045230		4704501058	108	W37 YANKEY-FREEMAN #3	LOGAN	7,0	COLUMBIA GAS TRANSMI
8045229		4704501059	108	W5 WHITE HEIRS	LOGAN	2,0	COLUMBIA GAS TRANSMI
8045123		4704501062	108	W6 YANKEY-FREEMAN #1	LOGAN	4,0	COLUMBIA GAS TRANSMI
*FMF OIL & GAS PROPERTIES				RECEIVED: 07/07/80 JA: WV			
8045215		4708300246	103	BURKE #2 PERMIT NO	ROARING CREEK DISTRICT	25,0	COLUMBIA GAS TRANSMI
8045220		4700101103	103	KEELEY #1 PERMIT NO BAR 001-1103	HELLS RUN VALLEY DISTRIC	45,0	COLUMBIA GAS TRANSMI
*FRANKLIN ADKINS				RECEIVED: 07/07/80 JA: WV			
8045217		4702123202	103	HYMER #2	GLENVILLE DISTRICT	12,0	CONSOLIDATED GAS SUP
*INTERSTATE DRILLING INC				RECEIVED: 07/07/80 JA: WV			
8045164		4708503648	108	BEALL NO 1 47-085-3648	MURPHY	7,4	CONSOLIDATED GAS SUP
8045155		4704102485	108	BONNETT 1 47-041-2485	HACKERS CREEK	7,2	CONSOLIDATED GAS SUP
8045158		4704102171	108	BUTCHER 3 47-041-2171	FREEMANS	12,6	CONSOLIDATED GAS SUP
8045157		4710500630	108	CAMPBELL DEPUE 47-105-630	CRESTON	1,0	COLUMBIA GAS TRANSMI
8045156		4710506390	108	COOPER 47-105-639	CRESTON	4,3	COLUMBIA GAS TRANSMI
8045160		4704102136	108	LONG NO 1 47-041-2136	HACKERS CREEK	18,3	CONSOLIDATED GAS SUP
8045159		4704102140	108	LONG NO 2 47-041-2140	HACKERS CREEK	18,0	CONSOLIDATED GAS SUP
8045161		4704102089	108	HERTZ #2 47-041-2089	FREEMANS CREEK	15,8	CONS GAS SUPPLY CORP
*KEITH CRIMFIELD				RECEIVED: 07/07/80 JA: WV			
8045214		4700701069	108	EVA WILLIAMS #1	SALT LICK	10,0	EQUITABLE GAS CO
8045213		4700701084	108	HERNDON #1	SALT LICK	2,0	EQUITABLE GAS CO
8045219		4700710680	108	HUBERT TAYLOR #1	SALT LICK	14,0	EQUITABLE GAS CO
*P L GAINER AGENT				RECEIVED: 07/07/80 JA: WV			
8045138		4701301481	108	PETTIT NO 2 GAS CO	SHERIDAN	3,0	CONSOLIDATED GAS SUP
8045139		4701301539	108	PETTIT NO 3 GAS CO	SHERIDAN	3,5	CONSOLIDATED GAS SUP
8045136		4701301376	108	RITTON NO 1	LEE	1,0	CONSOLIDATED GAS SUP
8045137		4701301404	108	WOODS NO 1	SHERIDAN	2,4	CONSOLIDATED GAS SUP
*PENNZOIL COMPANY				RECEIVED: 07/07/80 JA: WV			
8045210		4709500792	108	ISAAC BAKER HEIRS #3	MCELHOY DISTRICT	0,0	CONSOLIDATED GAS SUP
8045087		4708703284	108	J J WHITE #2	GEARY	0,0	CONSOLIDATED GAS SUP
8045097		4708703279	108	U D STUCKLEY #102	GEARY	0,0	CONSOLIDATED GAS SUP
8045098		4708703278	108	U D STUCKLEY #103	GEARY	0,0	CONSOLIDATED GAS SUP
8045091		4708703283	108	D D STUCKLEY #104	GEARY	0,0	CONSOLIDATED GAS SUP
8045100		4701501770	108	U D STUCKLEY #108	HENRY	0,0	CONSOLIDATED GAS SUP
8045092		4708703281	108	U D STUCKLEY #54	GEARY	0,0	CONSOLIDATED GAS SUP
8045094		4703502417	108	UGDEN T F #2	SANDIS	0,5	CONSOLIDATED GAS SUP
8045188		4708703274	108	P A TALLMAN #38	SMITHFIELD	0,0	CONSOLIDATED GAS SUP
8045184		4708703276	108	P A TALLMAN #40	SMITHFIELD	0,0	CONSOLIDATED GAS SUP
8045189		4708703275	108	P A TALLMAN #44	SMITHFIELD	0,0	CONSOLIDATED GAS SUP
8045190		4708703282	108	P A TALLMAN #45	SMITHFIELD	0,0	CONSOLIDATED GAS SUP
8045102		4701302823	108	W T RAFFERTY #5	SHERMAN DISTRICT	1,5	CONSOLIDATED GAS SUP
8045101		4701302824	108	W T RAFFERTY #6	SHERMAN DISTRICT	1,5	CONSOLIDATED GAS SUP
*RITCHIE PETROLEUM INC				RECEIVED: 07/07/80 JA: WV			
8045140		4708504651	108	BURBRIDGE #1	HARRISVILLE AREA	0,3	CONSUMERS GAS UTILIT
8045126		4708504647	108	C E SIMMONS #2	OIL RIDGE AREA	0,3	CONSUMERS GAS UTILIT
8045112		4708504657	108	G M COKELEY #1	HARRISVILLE AREA	0,3	CONSUMERS GAS UTILIT
8045148		4708504633	108	G M HAMMER #15	OIL RIDGE AREA	0,3	CONSUMERS GAS UTILIT
8045113		4708504656	108	G W HAMMER #1	OIL RIDGE AREA	0,3	CONSUMERS GAS UTILIT
8045146		4708504636	108	G W HAMMER #11	OIL RIDGE AREA	0,3	CONSUMERS GAS UTILIT
8045223		4708502732	108	G W HAMMER #13	OIL RIDGE AREA	0,3	CONSUMERS GAS UTILIT
8045150		4708504631	108	G W HAMMER #2	OIL RIDGE AREA	0,3	CONSUMERS GAS UTILIT
8045116		4708504645	108	G W HAMMER #4	OIL RIDGE AREA	0,3	CONSUMERS GAS UTILIT
8045194		4708504622	108	G W HAMMER #7	OIL RIDGE AREA	0,3	CONSUMERS GAS UTILIT

VOLUME 248 PAGE 006

JD NO	JA DKT	API NO	SEC	* WELL NAME	FIELD NAME	PROD	PURCHASER
8045114		4708504655	108	G Y REXROAD #5	ELM RUN	0,3	CONSUMERS GAS UTILIT
8045125		4708504648	108	I N COKELEY #1	HARRISVILLE AREA	0,3	CONSUMERS GAS UTILIT
8045124		4708504649	108	I N COKELEY #2	HARRISVILLE AREA	0,3	CONSUMERS GAS UTILIT
8045147		4708504634	108	J F HOOVER #3	OIL RIDGE AREA	2,5	CONSUMERS GAS UTILIT
8045193		4708504623	108	J F HOOVER #5	OIL RIDGE AREA	2,5	CONSUMERS GAS UTILIT
8045111		4708504658	108	J F HOOVER #6	OIL RIDGE AREA	0,3	CONSUMERS GAS UTILIT
8045144		4708504639	108	J N PIERPONT #1	HARRISVILLE AREA	0,3	CONSUMERS GAS UTILIT
8045145		4708504638	108	J N PIERPONT #2	HARRISVILLE AREA	0,3	CONSUMERS GAS UTILIT
8045109		4708504660	108	S H ZICKA FOOSE #12	ELM RUN	0,3	CONSUMERS GAS UTILIT
8045152		4708504629	108	S H ZICKA FOOSE #18	ELM RUN	0,3	CONSUMERS GAS UTILIT
8045151		4708504630	108	S H ZICKA FOOSE #22	ELM RUN	0,3	CONSUMERS GAS UTILIT
8045153		4708504663	108	S H ZICKAFOOSE #15	ELM RUN	0,3	CONSUMERS GAS UTILIT
8045110		4708504659	108	S H ZICKAFOOSE #16	ELM RUN	0,3	CONSUMERS GAS UTILIT
8045154		4708504662	108	S H ZICKAFOOSE #20	ELM RUN	0,3	CONSUMERS GAS UTILIT
8045198		4708504618	108	S H ZICKAFOOSE #23	ELM RUN	0,3	CONSUMERS GAS UTILIT
8045199		4708504617	108	S H ZICKAFOOSE #26	ELM RUN	0,3	CONSUMERS GAS UTILIT
8045200		4708504616	108	S H ZICKAFOOSE #28	ELM RUN	0,3	CONSUMERS GAS UTILIT
8045142		4708504641	108	S H ZICKAFOOSE #4	ELM RUN	0,3	CONSUMERS GAS UTILIT
8045192		4708504624	108	S H ZICKAFOOSE #5	ELM RUN	0,3	CONSUMERS GAS UTILIT
8045191		4708504625	108	S H ZICKAFOOSE #7	ELM RUN	0,3	CONSUMERS GAS UTILIT
8045120		4708504628	108	S H ZICKAFOOSE #9	ELM RUN	0,3	CONSUMERS GAS UTILIT
8045108		4708504661	108	S H ZICKAFOOSE #29	ELM RUN	0,3	CONSUMERS GAS UTILIT
8045196		4708504620	108	S SMITH #1	ELM RUN	0,3	CONSUMERS GAS UTILIT
8045106		4708504627	108	S SMITH #10	ELM RUN	0,3	CONSUMERS GAS UTILIT
8045197		4708504619	108	S SMITH #11	ELM RUN	0,3	CONSUMERS GAS UTILIT
8045127		4708504646	108	S SMITH #17	ELM RUN	0,3	CONSUMERS GAS UTILIT
8045195		4708504621	108	S SMITH #2	ELM RUN	0,3	CONSUMERS GAS UTILIT
8045115		4708504653	108	S SMITH #4	ELM RUN	0,3	CONSUMERS GAS UTILIT
8045143		4708504640	108	S SMITH #5	ELM RUN	0,3	CONSUMERS GAS UTILIT
8045222		4708503316	108	S SMITH #6	ELM RUN	0,3	CONSUMERS GAS UTILIT
8045141		4708504650	108	S SMITH #9	ELM RUN	0,3	CONSUMERS GAS UTILIT
8045118		4708504643	108	T H HARRIS #1	HARRISVILLE AREA	0,3	CONSUMERS GAS UTILIT
8045119		4708504642	108	W COKELEY #1	HARRISVILLE AREA	0,3	CONSUMERS GAS UTILIT
8045149		4708504632	108	W COKELEY #2	HARRISVILLE AREA	0,3	CONSUMERS GAS UTILIT
8045107		4708504626	108	W W TAPP #2	HARRISVILLE AREA	0,3	CONSUMERS GAS UTILIT
8045117		4708504644	108	W W TAPP #3	HARRISVILLE AREA	0,3	CONSUMERS GAS UTILIT
*ROGERS & SON				RECEIVED: 07/07/80 JA: HV			
8045218		4701329900	103	JOHN ARTHUR WELL NO 1	LEE DISTRICT	0,0	COLUMBIA GAS TRANSMI
*STONEWALL GAS CO INC				RECEIVED: 07/07/80 JA: HV			
8045103		4703322205	103	AME MATTHEY #2	UNION	30,0	CONSOLIDATED GAS SUP
8045093		4703322168	103	JAMES CORDER #1	UNION	0,0	CONSOLIDATED GAS SUP
*TEXAS INTERNATIONAL PET CORP				RECEIVED: 07/07/80 JA: HV			
8045104		4710900832	103	POCAHONTAS LAND CORP #C-10	BARKERS RIDGE	36,0	CONSOLIDATED GAS SUP
8045185		4710900767	103	POCAHONTAS LAND CORP #C-13	BARKERS RIDGE	25,0	CONSOLIDATED GAS SUP
8045105		4710900792	103	POCAHONTAS LAND CORP #C-21	BARKERS RIDGE	25,0	CONSOLIDATED GAS SUP
8045186		4710900759	103	POCAHONTAS LAND CORP #C-3	BARKERS RIDGE	25,0	CONSOLIDATED GAS SUP
8045094		4710900758	103	POCAHONTAS LAND CORP #C-4	BARKERS RIDGE	25,0	CONSOLIDATED GAS SUP
*THE CARTER JONES LUMBER CO				RECEIVED: 07/07/80 JA: HV			
8045221		4709500685	103	W KIMBLE #1	ELLSWORTH DISTRICT	15,0	
*UNITED OPERATING COMPANY				RECEIVED: 07/07/80 JA: HV			
8045216		4701702532	103	GOLDIE WILSON 1-A	CABIN RUN	0,0	

****

** U.S. GEOLOGICAL SURVEY - METAIRIE,LA

****

*C&K MARINE PRODUCTION COMPANY RECEIVED: 07/07/80 JA: LA

VOLUME 248 PAGE 007

JD NO	JA DKT	API NO	SEC	# WELL NAME	FIELD NAME	PROD	PURCHASER
8045033	GD-1366	1771540158	102	OCS-G-1960 ND A-3	SOUTH TIMBALIER BLOCK	1300,0	TRANSCONTINENTAL GAS
*CHEVRON U S A INC				RECEIVED: 07/08/80 JA: LA 3			
8045038	GD-1359	1770740242	102	OCS-G-2890 ND 2	SOUTH MARSH ISLAND	2750,0	NATURAL GAS PIPELINE
*GULF OIL CORPORATION				RECEIVED: 07/07/80 JA: LA 3			
*8045060	GD-1407	1771540322	102	OCS G-2624 #B-11	SOUTH TIMBALIER	200,0	TEXAS EASTERN TRANSM
*8045058	GD-1408	1771540322	102	OCS G-2624 #B-110	SOUTH TIMBALIER	900,0	TEXAS EASTERN TRANSM
*KERR-MCGEE CORPORATION				RECEIVED: 07/07/80 JA: LA 3			
8045059	GD-1391	1770240552	102	OCS G-2009 ND A-7	WEST CAMERON	93,0	TEXAS EASTERN TRANSM
*KERR-MCGEE CORPORATION				RECEIVED: 07/08/80 JA: LA 3			
8045036	GD-1392	1770240511	102	OCS G-2009 ND A-2	WEST CAMERON	199,0	TEXAS EASTERN TRANSM
*PLACID OIL COMPANY				RECEIVED: 07/08/80 JA: LA 3			
*8045035	GD-1405	1770740191	102	B-15A	SOUTH MARSH ISLAND	745,0	TRUNKLINE GAS CO
*TRANSCO EXPLORATION COMPANY				RECEIVED: 07/08/80 JA: LA 3			
*8045037	GD-1433	1770240546	102	A-7	WEST CAMERON	2190,0	TRANSCONTINENTAL GAS
*PENNZOIL PRODUCING COMPANY				RECEIVED: 07/03/80 JA: TX 3			
*8045032	GD-1352	4270940355	102	PENNZOIL CO OCS-G 2567 WELL #A-16	HIGH ISLAND AREA SOUTH A	8,0	UNITED GAS PIPE LINE
*PENNZOIL PRODUCING COMPANY				RECEIVED: 07/08/80 JA: TX 3			
*8045034	GD-1353	4270940325	102	D PENNZOIL CO OCS-G 2566 WELL #A-17	HIGH ISLAND AREA SOUTH A	1186,0	UNITED GAS PIPE LINE

****

** U.S. GEOLOGICAL SURVEY - ALBUQUERQUE,NM

****

*KERBEY & COMPANY				RECEIVED: 07/08/80 JA: NM 4			
8045047	NM-5272-79	3001501829	108	D DUNN #1	ARTESIA QUEEN GRAYBURG	0,0	PHILLIPS PETROLEUM C
8045048	NM-5273-79	3001502652	108	D DUNN #2	ARTESIA QUEEN GRAYBURG	0,0	PHILLIPS PETROLEUM C
*PETROLEUM CONSULTANTS INC				RECEIVED: 07/08/80 JA: NM 4			
8045046	NM 3531-79	3004500000	108	D 2-9 FEDERAL	BISTI	2,5	EL PASO NATURAL GAS
*PETROLEUM DEVELOPMENT CORP				RECEIVED: 07/08/80 JA: NM 4			
8045045	NM 030779103	3000500487	103	D HUDSON FEDERAL #1	MESCALERO SANDS MISSISSI	220,0	TUCO INC
*ROCANVILLE CORP				RECEIVED: 07/08/80 JA: NM 4			
8045049	NM-0246-80	3004506559	108	D #1 FAIRFIELD NM 060402-A	BASIN DAKOTA	15,0	EL PASO NATURAL GAS

****

** U.S. GEOLOGICAL SURVEY - CASPER,WY

****

*ENERGETICS INC				RECEIVED: 07/08/80 JA: MT 5			
8045084	M 1047-9	2500521386	108	FEDERAL 33X-19	SANTOOTH MOUNTAIN	9,9	MONTANA POWER CO
*MIDLANDS GAS CORPORATION				RECEIVED: 07/08/80 JA: MT 5			
8045079	M 1030-9	2507121571	108	0671 1-0671 FEDERAL	BOWDOIN	11,0	KANSAS-NEBRASKA NATU
8045073	M 1021-9	2507121224	108	0742 FEDERAL #1	BOWDOIN	22,0	KANSAS-NEBRASKA NATU
8045066	M 1113-9	2507121383	108	0813 FEDERAL 1	BOWDOIN	1,0	KANSAS-NEBRASKA NATU
8045075	M 1023-9	2507121258	108	0932 FEDERAL #1	BOWDOIN	15,0	KANSAS-NEBRASKA NATU
8045074	M 1022-9	2507121225	108	0942 FEDERAL #1	BOWDOIN	12,0	KANSAS-NEBRASKA NATU
8045080	M 1031-9	2507121476	108	2241 FEDERAL #1	BOWDOIN	18,0	KANSAS-NEBRASKA NATU
8045082	M 1034-9	2507121547	108	2242 FEDERAL #1	BOWDOIN	15,0	KANSAS-NEBRASKA NATU
8045081	M 1032-9	2507121386	108	2570 #1 FEDERAL	BOWDOIN	21,0	KANSAS-NEBRASKA NATU
8045083	M 1035-9	2507121357	108	2642 FEDERAL #1	BOWDOIN	15,0	KANSAS-NEBRASKA NATU
8045067	M1110-9	2507121318	108	2742 FEDERAL 2742-1	BOWDOIN	21,0	KANSAS-NEBRASKA NATU
8045076	M 1025-9	2507121583	108	2761 1-27 SOC ET AL FEDERAL	BOWDOIN	21,0	KANSAS-NEBRASKA NATU
8045077	M 1027-9	2507121524	108	2870 FEDERAL #1	BOWDOIN	18,0	KANSAS-NEBRASKA NATU
8045078	M 1028-9	2507121521	108	3070 #1 FEDERAL	BOWDOIN	15,0	KANSAS-NEBRASKA NATU
*AL-AQUITAINE EXPLORATION LTD				RECEIVED: 07/08/80 JA: ND 5			
8045068	ND 1234-9	3500700306	102	A1-AQUITAINE US 2-11	TEDDY ROOSEVELT	45,0	WESTERN GAS PROCESSO
*BURTON W HANCOCK				RECEIVED: 07/08/80 JA: UT 5			
8045065	UC 553-9	4301930225	108	GOVERNMENT NO 20	WEST BAR-X	3,0	NORTHWEST PIPELINE C

VOLUME 248 PAGE 008

JD NO	JA DKT	API NO	SEC	WELL NAME	FIELD NAME	PROD	PURCHASER
*CIG.EXPLORATION INC				RECEIVED: 07/08/80 JA: MY 5			
*8045064	W 1251-9B	4902521065	102	BULL FROG UNIT #1 (6-30-86)	WALTMAN (DEEP)	493,0	KANSAS NEBRASKA NATU
*DAVIS OIL COMPANY				RECEIVED: 07/08/80 JA: MY 5			
*8045085	W 1199-9	4903721213	103	NICKEL UNIT #2	WILD ROSE	250,0	NATURAL GAS PIPELINE
*DIAMOND SHAMROCK CORPORATION				RECEIVED: 07/08/80 JA: MY 5			
8045070	W 1273-9	4900921558	102	CAMPBELL FEDERAL NO 21-8	SCOTT	12,0	
8045069	W 1272-9	4900921559	102	CAMPBELL FEDERAL NO 23-8	SCOTT	12,0	
8045071	W 1275-9	4900921560	102	CAMPBELL FEDERAL NO 43-5	SCOTT	12,0	
*ENERGETICS INC				RECEIVED: 07/08/80 JA: MY 5			
8045062	W 1084-9	4903721002	103	FEDERAL 10-19	BIRD CANYON	127,8	NORTHWEST PIPELINE C
8045063	W 1085-9	4903520554	103	FEDERAL 10-30	BIRD CANYON	445,5	NORTHWEST PIPELINE C
*NATIONAL COOP REFINERY ASSOC				RECEIVED: 07/08/80 JA: MY 5			
8045072	W 1261-9	4902521144	103	WALLACE CREEK #6	WALLACE CREEK - RADERVIL -	15,0	KANSAS-NEBRASKA NATU
*TEXAS OIL & GAS CORP				RECEIVED: 07/08/80 JA: MY 5			
8045086	W 1247-9	4903721439	103	WINSTON FEDERAL #1	NITCHIE GULCH	548,0	
** BUREAU OF INDIAN AFFAIRS, USAGE AGENCY, PAWHUSKA,OK							
*SUN OIL COMPANY (DELAWARE)				RECEIVED: 07/07/80 JA: OK 8			
8045053		3511325313	103	CHAPMAN BARNARD A NO 1	DOG CREEK SOUTH	37,0	PHILLIPS PETROLEUM C
8045052		3511324355	103	CHAPMAN BARNARD NO 19	DOG CREEK SOUTH	3,0	PHILLIPS PETROLEUM C
8045056		3511324354	103	CHAPMAN BARNARD NO 20	DOG CREEK SOUTH	16,0	PHILLIPS PETROLEUM C
8045051		3511324633	103	CHAPMAN BARNARD NO 21	DOG CREEK SOUTH	19,0	PHILLIPS PETROLEUM C
8045055		3511324674	103	CHAPMAN BARNARD NO 22	DOG CREEK SOUTH	20,0	PHILLIPS PETROLEUM C
8045054		3511324680	103	CHAPMAN BARNARD NO 23	DOG CREEK SOUTH	80,0	PHILLIPS PETROLEUM C

OTHER PURCHASERS

8044975	CHASE GATHERING SYSTEMS INC
8044976	CHASE GATHERING SYSTEMS INC
8044977	CHASE GATHERING SYSTEMS INC
8044978	CHASE GATHERING SYSTEMS INC
8044979	CHASE GATHERING SYSTEMS INC
8044980	CHASE GATHERING SYSTEMS INC
8044981	CHASE GATHERING SYSTEMS INC
8044982	CHASE GATHERING SYSTEMS INC
8044992	PUBLIC SERVICE CO OF OKLAHOMA
8044993	PUBLIC SERVICE CO OF OKLAHOMA
8044998	PANHANDLE EASTERN PIPELINE CO
8045032	MICHIGAN-WISCONSIN PIPELINE CO
8045034	MICHIGAN WISCONSIN PIPELINE CO
8045035	SOUTHERN NATURAL GAS CO
8045037	PUBLIC SERVICE ELECTRIC & GAS CO
8045041	NORTHWEST PIPELINE CORP
8045058	TENNESSEE GAS PIPELINE CO
8045060	TENNESSEE GAS PIPELINE CO
8045064	COLORADO INTERSTATE GAS CO
8045085	PANHANDLE EASTERN PIPELINE CO

[FR Doc. 80-23708 Filed 8-5-80; 8:45 am]
BILLING CODE 6450-85-C

ENVIRONMENTAL PROTECTION AGENCY

[FRL 1564-3]

Science Advisory Board; Meeting

The meeting is to be held in less than the 15 days required because the nature of the sampling to be performed must commence at once if it is to be completed before the onset of winter. Under Pub. L. 92-463, notice is hereby given for a meeting of the Study Group on Sampling Protocal of the Science Advisory Board of the U.S. Environmental Protection Agency to be held on August 8, 1980, starting at 8:30 a.m. and ending 5:00 p.m. The meeting location is: National Environmental Research Laboratory, Conference Room P 303, Research Triangle Park, North Carolina 27711.

This facility is located adjacent to the intersection of Highway 54 and Alexander Drive in Research Triangle Park, North Carolina. Visitors will be directed to the meeting room by the guard.

The purpose of the meeting is to provide review and comment on the sampling protocals that have been proposed for the Love Canal area, as requested by the Office of Research and Development.

The meeting is open to the public but the seating capacity is limited. Members of the public desiring to attend should preregister with Ms. Janice Phillips at 919-541-2106 no later than close of business August 7, 1980. Persons desiring additional information may contact Dr. Douglas Seba, Science Advisory Board, Environmental Protection Agency, Phone No. 202-472-9444.

Richard Dowd,

Staff Director, Science Advisory Board.

[FR Doc. 80-23790 Filed 8-5-80; 8:45 am]

BILLING CODE 6560-01-M

[FRL 1562-3; PP OG2275/T254]

American Cyanamid Co.; Pendimethalin; Establishment of a Temporary Tolerance

AGENCY: Environmental Protection Agency (EPA).

ACTION: Notice.

SUMMARY: A temporary tolerance has been established for the combined residues of the herbicide pendimethalin [N-(1-ethylpropyl)-3,4-dimethyl-2,6-dinitrobenzenamine] and its metabolite 4-[(1-ethylpropyl)amino]-2-ethyl-3,5-dinitrobenzyl alcohol in or on wheat grain and wheat straw at 0.1 part per million (ppm).

FOR FURTHER INFORMATION CONTACT: Robert J. Taylor, Product Manager (PM) 25, Registration Division, (TS-767), Office of Pesticide Programs, Environmental Protection Agency, 401 M Street, SW, Washington, D.C. 20460, 202/755-2916.

SUPPLEMENTARY INFORMATION: American Cyanamid Company, Agricultural Division, P.O. Box 400, Princeton, NJ 08540 submitted a pesticide petition (PP OG2275) to the EPA. The petition requested that a temporary tolerance be established for the combined residues of the herbicide pendimethalin [N-(1-ethylpropyl)-3,4-dimethyl-2,6-dinitrobenzenamine] and its metabolite 4-[(1-ethylpropyl)amino]-2-ethyl-3,5-dinitrobenzyl alcohol in or on wheat grain and wheat straw at 0.1 ppm.

These tolerances will permit the marketing of the above raw agricultural commodities when treated in accordance with an experimental use permit being issued under the Federal Federal Insecticide, Fungicide, and Rodenticide Act (Pub. L. 80-104, 61 Stat. 163, as amended by Pub. L. 92-516, 86 Stat. 975; Pub. L. 94-140, 89 Stat. 754, Pub. L. 95-396, 92 Stat. 819; 7 U.S.C. 136).

The scientific data reported and other relevant material have been evaluated, and it has been determined that the tolerances will protect the public health.

The temporary tolerance has been established on the condition that the experimental use permit be used with the following provisions:

1. The total amount of the active herbicide to be used will not exceed the amount authorized in the experimental use permit.

2. American Cyanamid will immediately notify the Environmental Protection Agency of any findings from the experimental use that have a bearing on safety. The firm will also keep records of production, distribution, and performance and on request make the records available to any authorized officer or employee of the EPA or the Food and Drug Administration.

This temporary tolerance expires on September 1, 1981. Residues not in excess of the tolerance remaining in or on the raw agricultural commodities after the expiration date will not be considered actionable if the pesticide is legally applied during the term of, and in accordance with the provisions of the experimental use permit and temporary tolerance. This tolerance may be revoked if the experimental use permit is revoked of if any scientific data or experience with this pesticide indicate such revocation is necessary to protect the public health.

(Sec. 408(j), 68 Stat. 561, (21 U.S.C. 346a(j)))

Dated: July 28, 1980.

Douglas D. Campt,

Director, Registration Division, Office of Pesticide Programs.

[FR Doc. 80-23649 Filed 8-5-80; 8:45 am]

BILLING CODE 6560-01-M

[FRL 1562-2; PF-185A]

American Cyanamid Co.; Filing of Pesticide and Food Additive Petition; Correction

AGENCY: Environmental Protection Agency (EPA).

ACTION: Correction.

SUMMARY: This document corrects a notice that appeared on page 34054 in the Federal Register of May 21, 1980 (FR Doc. 80-15512).

FOR FURTHER INFORMATION CONTACT: Franklin D. R. Gee, Product Manager (PM) 17, Office of Pesticide Programs, Registration Division (TS-767), Rm. E-341, Environmental Protection Agency, 401 M Street SW, Washington, D.C. 20460, 202/426-9741.

SUPPLEMENTARY INFORMATION: In FR Doc. 80-15512 appearing at page 34054, May 21, 1980, Petition OF2347, the chemical "phenoxyphenyl)methyl-4-chloro-alpha-methylethyl) benzeneacetate" should have been (± cyano(3-phenoxyphenyl)methyl(+)-4-(difluoromethoxy)-alpha-(1-methylethyl)benzeneacetate."

Dated: July 28, 1980.

Douglas D. Campt,

Director, Registration Division, Office of Pesticide Programs.

[FR Doc. 80-23648 Filed 8-5-80; 8:45 am]

BILLING CODE 6560-01-M

[OPTS-51105; FRL 1561-8]

Polyisobutenyl Succinic Anhydride Reaction Products With Substituted Ethanol; Premanufacture Notice

AGENCY: Environmental Protection Agency (EPA).

ACTION: Notice.

SUMMARY: Section 5(a)(1) of the Toxic Substances Control Act (TSCA) requires any person who intends to manufacture or import a new chemical substance to submit a premanufacture notice (PMN) to EPA to least 90 days before manufacture or import commences. Section 5(d)(2) requires EPA to publish in the Federal Register certain information about each PMN within 5 working days after receipt. This Notice

announces receipt of a PMN and provides a summary.

DATE: Written comments by September 14, 1980.

ADDRESS: Written comments to: Document Control Officer (TS-793), Office of Pesticides and Toxic Substances, Environmental Protection Agency, 401 M St., SW., Washington, DC 20460, 202-755-8050.

FOR FURTHER INFORMATION CONTACT: Ann Radosevich, Premanufacturing Review Division (TS-794), Office of Pesticides and Toxic Substances, Environmental Protection Agency, 401 M St., SW., Washington, DC 20460, 202/426-2601.

SUPPLEMENTARY INFORMATION: Section 5(a)(1) of TSCA [90 Stat. 2012 (15 U.S.C. 2604)], requires any person who intends to manufacture or import a new chemical substance to submit a PMN to EPA at least 90 days before manufacture or import commences. A "new" chemical substance is any substance that is not on the Inventory of existing substances compiled by EPA under Section 8(b) of TSCA. EPA first published the Initial Inventory on June 1, 1979. Notice of availability of the Initial Inventory was published in the Federal Register of May 15, 1979 (44 FR 28558). The requirement to submit a PMN for a new chemical substances manufactured or imported for commercial purposes became effective on July 1, 1979.

EPA has proposed premanufacture notification rules and forms in the Federal Register issues of January 10, 1979 (44 FR 2242) and October 16, 1979 (44 FR 59764). These regulations, however, are not yet in effect. Interested persons should consult the Agency's Interim Policy published in the Federal Register of May 15, 1979 (44 FR 28564) for guidance concerning premanufacture notification requirements prior to the effective date of these rules and forms. In particular, see page 28567 of the Interim Policy.

A PMN must include the information listed in Section 5(d)(1) of TSCA. Under section 5(d)(2) EPA must publish in the Federal Register nonconfidential information on the identity and use(s) of the substance, as well as a description of any test data submitted under section 5(b). In addition, EPA has decided to publish a description of any test data submitted with the PMN and EPA will publish the identity of the submitter unless this information is claimed confidential.

Publication of the section 5(d)(2) notice is subject to section 14 concerning disclosure of confidential information. A company can claim confidentiality for any information submitted as part of a PMN. If the company claims confidentiality for the specific chemical identity or use(s) of the chemical, EPA encourages the submitter to provide a generic use description, a nonconfidential decription of the potential exposures from use, and a generic name of the chemical. EPA will publish the generic name, the generic use(s), and the potential exposure descriptions in the Federal Register.

If no generic use description or generic name is provided, EPA will developed one and after providing due notice to the submitter, will publish an amended Federal Register notice. EPA immediately will review confidentiality claims for chemical identity, chemical use(s), the identity of the submitter, and for health and safety studies. IF EPA determines that portions of this information are not entitled to confidential treatment, the Agency will publish an amended notice and will place the information in the public file, after notifying the submitter and complying with other applicable procedures.

After receipt, EPA has 90 days to review a PMN under section 5(a)(1). The section 5(a)(2) Federal Register notice indicates the date when the review period ends for each PMN. Under section 5(c), EPA may, for good cause, extend the review period for up to an additional 90 days. If EPA determines that an extension is necessary, it will publish a notice in the Federal Register.

Once the review period ends, the submitter may manufacture the substance unless EPA has imposed restrictions. When the submitter begins to manufacture the substance, he must report to EPA, and the Agency will add the substance to the Inventory. After the substance is added to the Inventory, any company may manufacture it without providing EPA notice under section 5(a)(1)(A).

Therefore, under the Toxic Substances Control Act, a summary of the data taken from the PMN is published herein.

Interested persons may, on or before September 14, 1980, submit to the Document Control Officer (TS-793), Rm. E-447, Office of Pesticides and Toxic Substances, 401 M St., SW, Washington, DC 20460, written comments regarding this notice. Three copies of all comments shall be submitted, except that individuals may submit single copies of comments. The comments are to be identified with the document control number "[OPTS-51105]" and the PMN number. Comments received may be seen in the above office between 8:00 a.m. and 4:00 p.m., Monday through Friday, excluding holidays.

(Sec. 5, 90 Stat. 2012 (15 U.S.C. 2604))

Dated: July 29, 1980

Warren R. Muir,

Acting Deputy Assistance Administrator for Chemical Control.

PMN 80-172.

Close of Review Period. October 14, 1980.

Manufacturer's Identity. Claimed confidential.

Specific Chemical Identity. Claimed confidential. Generic name provided: Polyisobutenyl succinic anhydride reaction products with substituted ethanol.

The following summary is taken from data submitted by the manufacturer in the PMN.

Use. Claimed confidential.

Production Estimates. Claimed confidential.

Physical/Chemical Properties. Claimed confidential.

Toxicity Data. The manufacturer did not submit toxicity data with the PMN, but stated that results of various toxicity tests will be provided the Agency at a later date.

Exposure. Claimed confidential.

Environmental Release/Disposal. Claimed confidential.

[FR Doc. 80-23647 Filed 8-5-80; 8:45 am]

BILLING CODE 6560-01-M

[OPTS-59031; FRL 1561-7]

Certain Chemical Premanufacture Exemption; Application

AGENCY: Environmental Protection Agency (EPA).

ACTION: Notice.

SUMMARY: Section 5(a)(1)(A) of the Toxic Substances Control Act (TSCA) requires any person intending to manufacture or import a new chemical substance for a commercial purpose in the United States to submit a premanufacture notice (PMN) to EPA at least 90 days before he commences such manufacture or import. Under Section 5(h) the Agency may, upon application, exempt any person from any requirement of section 5 to permit such person to manufacture or process a chemical for test marketing purposes. Section 5(h)(6) requires EPA to issue a notice of receipt of any such application for publication in the Federal Register. This notice announces receipt of an application for an exemption from the premanufacture reporting requirements for test marketing purposes and requests comments on the appropriateness of granting the exemption.

DATE: The Agency must either approve or deny this application by September 5, 1980. Persons should submit written comments on the applications no later than August 21, 1980.

ADDRESS: Written comments to: Document Control Officer (TS-793), Office of Pesticides and Toxic Substances, Environmental Protection Agency, 401 M St. SW., Washington, DC 20460, 202-755-8050.

FOR FURTHER INFORMATION CONTACT: Robert Smith, Premanufacturing Review Division (TS-794), Office of Pesticides and Toxic Substances, Environmental Protection Agency, Washington, DC 20460, 202-426-8816.

SUPPLEMENTARY INFORMATION: Under Section 5 of TSCA [90 Stat. 2012 (15 U.S.C. 2604)], any person who intends to manufacture or import a new chemical substance for commercial purposes in the United States must submit a notice to EPA before the manufacture or import begins. A "new" chemical substance is any chemical substance that is not on the Inventory of existing chemical substances compiled by EPA under Section 8(b) of TSCA. EPA first published the Initial Inventory on June 1, 1979. Notice of availability of the Initial Inventory was published in the Federal Register on May 15, 1979 (44 FR 28558). The requirement to submit a PMN for new chemical substances manufactured or imported for commercial purposes became effective on July 1, 1979.

Section 5(a)(1) requires each PMN to be submitted in accordance with section 5(d) and any applicable requirement of chemical substances that are subject to testing rules under section 4. Section 5(b)(2) requires additional information in PMN's for substances which EPA, by rules under section 5(b)(4), has determined may present unreasonable risks of injury to health or the environment.

Section 5(h), "Exemptions," contains several provisions for exemptions from some or all of the requirements of section 5. In particular, section 5(h)(1) authorized EPA, upon application, to exempt persons from any requirement of section 5(a) or section 5(b) to permit the persons to manufacture or process a chemical substance for test marketing purposes. To grant such an exemption, the Agency must find that the test marketing activities will not present any unreasonable risk of injury to health or the environment. EPA must either approve or deny the application within 45 days of its receipt, and the Agency must publish a notice of its disposition in the Federal Register. If EPA grants a test marketing exemption, it may impose restrictions on the test marketing activities.

Under section 5(h)(6), EPA must publish in the Federal Register a notice of receipt of an application under section 5(h)(1) immediately after the agency receives the application. The notice identifies and briefly describes the application (subject to section 14 confidentiality restrictions) and gives interested persons an opportunity to comment on it and whether EPA should grant the exemption. Because the Agency must act on the application within 45 days, interested persons should provide comments within 15 days after the notice appears in the Federal Register.

EPA has proposed Premanufacture Notification Requirements and Review Procedures published in the Federal Register of January 10, 1979 (44 FR 2242) and October 16, 1979 (44 FR 59764) containing proposed premanufacture rules and notice forms. Proposed 40 CFR 720.15 (44 FR 2268) would implement section 5(h)(1) concerning exemptions for test marketing and includes proposed 40 CFR 720.15(c) concerning the section 5(h)(6) Federal Register notice. However, these requirements are not yet in effect. In the meantime, EPA has published a statement of Interim Policy published in the Federal Register of May 15, 1979 (44 FR 28564) which applies to PMN's submitted prior to promulgation of the rules and notice forms.

Interested persons may, on or before August 21, 1980, submit to the Document Control Officer (TS-793), Rm. E-447, Office of Pesticides and Toxic Substances, 401 M St., SW, Washington, DC 20460, written comments regarding this notice. Three copies of all comments shall be submitted, except that individuals may submit single copies of comments. The comments are to be identified with the document control number "[OPTS-59031]". Comments received may be seen in the above office between 8:00 a.m. and 4:00 p.m., Monday through Friday excluding holidays.

(Sec. 5, 90 Stat. 2012 (15 U.S.C. 2604))

Dated: July 28, 1980.

Warren R. Muir,

Acting Deputy Assistant Administrator for Chemical Control.

TM 80-35.

Close of Review Period. September 5, 1980.

Manufacturer's Identity. Claimed confidential.

Specific Chemical Identity. Claimed confidential.

Use. Claimed confidential.

Production Estimates. Claimed confidential.

Physical/Chemical Properties. Claimed confidential.

Toxicity Data. Claimed confidential.

Exposure. Claimed confidential.

Environmental Release/Disposal. Claimed confidential.

[FR Doc. 80-23646 Filed 8-5-80; 8:45 am]

BILLING CODE 6560-01-M

[OPTS-51103; FRL 1561-6]

Polyester Reaction Product With Toluene Diisocyanate Acrylate Terminated; Premanufacture Notice

AGENCY: Environmental Protection Agency (EPA).

ACTION: Notice.

SUMMARY: Section 5(a)(1) of the Toxic Substances Control Act (TSCA) requires any person who intends to manufacture or import a new chemical substance to submit a premanufacture notice (PMN) to EPA at least 90 days before manufacture or import commences. Section 5(d)(2) requires EPA to publish in the Federal Register certain information about each PMN within 5 working days after receipt. This Notice announces receipt of APMN and provides a summary.

DATE: Written comments by September 15, 1980.

ADDRESS: Written comments to: Document Control Officer (TS-793), Office of Pesticides and Toxic Substances, Environmental Protection Agency, 401 M St., SW, Washington, DC 20460, 202-755-8050.

FOR FURTHER INFORMATION CONTACT: Robert Smith, Premanufacturing Review Division (TS-794), Office of Pesticides and Toxic Substances, Environmental Protection Agency, 401 M St., SW, Washington, DC 20460, 202/426-8815.

SUPPLEMENTARY INFORMATION: Section 5(a)(1) of TSCA [90 Stat. 2012 (15 U.S.C. 2604)], requires any person who intends to manufacture or import a new chemical substance to submit a PMN to EPA at least 90 days before manufacture or import commences. A "new" chemical substance is any substance that is not on the Inventory of existing substances compiled by EPA under Section 8(b) of TSCA. EPA first published the Initial Inventory on June 1, 1979. Notice of availability of the Initial Inventory was published in the Federal Register of May 15, 1979 (44 FR 28558). The requirement to submit a PMN for new chemical substances manufactured or imported for commercial purposes became effective on July 1, 1979.

EPA has proposed premanufacture notification rules and forms in the Federal Register issues of January 10,

1979 (44 FR 2242) and October 16, 1979 (44 FR 59764). These regulations, however, are not yet in effect. Interested persons should consult the Agency's Interim Policy published in the Federal Register of May 15, 1979 (44 FR 28564) for guidance concerning premanufacture notification requirements prior to the effective date of these rules and forms. In particular, see page 28567 of the Interim Policy.

A PMN must include the information listed in Section 5(d)(1) of TSCA. Under Section 5(d)(2) EPA must publish in the Federal Register nonconfidential information on the identity and use(s) of the substance, as well as a description of any test data submitted under section 5(b). In addition, EPA has decided to publish a description of any test data submitted with the PMN and EPA will publish the identity of the submitter unless his information is claimed confidential.

Publication of the section 5(d)(2) notice is subject to section 14 concerning disclosure of confidential information. A company can claim confidentiality for any information submitted as part of a PMN. If the company claims confidentiality for the specific chemical identity or use(s) of the chemical, EPA encourages the submitter to provide a generic use description, a nonconfidential description of the potential exposures from use, and a generic name for the chemical. EPA will publish the generic name, the generic use(s), and the potential exposure descriptions in the Federal Register.

If no generic use description or generic name is provided, EPA will develop one and after providing due notice to the submitter, will publish an amended Federal Register notice. EPA immediately will review confidentiality claims for chemical identity, chemical use(s), the identity of the submitter, and for health and safety studies. If EPA determines that portions of this information are not entitled to confidential treatment, the Agency will publish an amended notice and will place the information in the public file, after notifying the submitter and complying with other applicable procedures.

After receipt, EPA has 90 days to review a PMN under section 5(a)(1). The section 5(d)(2) Federal Register notice indicates the date when the review period ends for each PMN. Under section 5(c), EPA may, for good cause, extend the review period for up to an additional 90 days. If EPA determines that an extension is necessary, it will publish a notice in the Federal Register.

Once the review period ends, the submitter may manufacture the substance unless EPA has imposed restrictions. When the submitter begins to manufacture the substance, he must report to EPA, and the Agency will add the substance to the Inventory. After the substance is added to the Inventory, any company may manufacture it without providing EPA notice under section 5(a)(1)(A).

Therefore, under the Toxic Substances Control Act, a summary of the data taken from the PMN is published herein.

Interested persons may, on or before September 15, 1980, submit to the Document Control Officer (TS-793), Rm. E-447, Office of Pesticides and Toxic Substances, 401 M St., SW, Washington, DC 20460, written comments regarding this notice. Three copies of all comments shall be submitted, except that individuals may submit single copies of comments. The comments are to be identified with the document control number "[OPTS-51103]" and the PMN number. Comments received may be seen in the above office between 8:00 a.m. and 4:00 p.m., Monday through Friday, excluding holidays.

(Sec. 5, 90 Stat. 2012 (15 U.S.C. 2604))

Dated: July 29, 1980.

Warren R. Muir,

Acting Deputy Assistant Administrator for Chemical Control.

PMN 80-174.

Close of Review Period. October 15, 1980.

Manufacturer's Identity. Claimed confidential. Generic information provided:

Annual sales—$500 million.

Manufacturing site—South Atlantic region, U.S.

Standard Industrial Classification Code—2821.

Specific Chemical Identity. Claimed confidential. Generic name provided: Polyester reaction product with toluene diisocyanate acrylate terminated.

The following summary is taken from data submitted by the manufacturer in the PMN.

Use. Electronics photoresists coating.

Production Estimates. Claimed confidential.

Physical/Chemical Properties. Claimed confidential.

Toxicity Data.

Acute dermal toxicity (rabbits)—Non-toxic at 2 g/kg.

Acute oral toxicity (rats)—Toxic at 5 g/kg.

Primary skin irritation (rabbits)—Draize 3.63 (Moderately irritating).

Primary eye irritation (rabbits)—Extremely irritating.

Occupational Exposure.

Activity	Exposure Route	Max. No. Exposed	Max Duration		Concentration	
			Hr/Da	Da/Yr	Average	Peak (PPM)
Manufacture.	Dermal	3	1	150		0-1
Commercial use.	Dermal	5				

The manufacturer states that the manufacturing process is through a closed system and that the only exposure personnel would be subject to is during discharge. Minimum exposure would be expected as discharge goes directly form reactor to drums.

For commerical use, submitter will recommend that material be used in well ventilated areas and that personnel wear goggles and gloves.

Environmental Release/Disposal. The manufacturer claims that there will be no release to the environment of the PMN substance.

[FR Doc. 80-23645 Filed 8-5-80; 8:45 am]

BILLING CODE 6560-01-M

FEDERAL COMMUNICATIONS COMMISSION

[BL Docket No. 80-381, et al]

Casey Broadcasting Co., Inc., et al.; Designating Applications for Consolidated Hearing on Stated Issues

Hearing Designation Order

Adopted: June 26, 1980.

Released: July 30, 1980.

In re Applications of Casey Broadcasting Company, Inc. St. Marys, Georgia, Req: 93.5 MHz, Channel 228 3 kW (H&V) 288 feet, BC Docket No. 80-381 File No. BPH-781215AH; Camden Broadcasting Corporation, St. Marys, Georgia, Req: 93.5 MHz, Channel 228 3 kW (H&V) 297.3 feet, BC Docket No. 80-382, File No. BPH-790228AF; Radio Charlton, Inc. St. Marys/Kingsland, Georgia, Req: 93.5 MHz, Channel 228 3 kW (H&V) 300 feet, BC Docket No. 80-383, File No. BPH-790328AD; Lloyd Brinks St. Marys, Georgia, Req: 93.5 MHz, Channel 228 3 kW (H&V) 298 feet, BC Docket No. 80-384, File No. BPH-790328AM.

1. The Commission, by the Chief, Broadcast Bureau, acting pursuant to delegated authority, has under consideration the above captioned mutually exclusive applications filed by Casey Broadcasting Company, Inc. (Casey), Camden Broadcasting Corporation (Camden), Radio Charlton,

Inc. (Charlton), and Lloyd Brinks (Brinks).

2. *Camden.* Applicants for new broadcast stations are required by Section 73.3580(f) of the Commission's Rules to give local notice of the filing of their applications. They must then file with the Commission the statement described in Section 73.3580(h) of the Rules. We have no evidence that Camden published the required notice. To remedy this deficiency, Camden will be required to publish local notice of its application, if it has not already done so, and to file a statement of publication with the presiding Administrative Law Judge.

3. Camden has failed to comply with the requirements of the *Primer on Ascertainment of Community Problems by Broadcast Applicants,* 27 FCC 2d 650, 21 RR 2d 1507 (1971). From the information before us, it appears that the applicant has filed to survey leaders of significant population groups, specifically blacks and the elderly, as required by Questions and Answers 4 and 20. In addition, Camden failed to specify the dates of the community and general public surveys in accordance with Questions and Answers 2 and 15. As a result, a limited ascertainment issue will be specified.

4. *Brinks.* Applicants for new broadcast stations are required by Section 73.3580(f) of the Commission's Rules to give local notice of the filing of their applications. They must then file with the Commission the statement described in Section 73.3580(h) of the Rules. We have no evidence that Brinks published the required notice. To remedy this deficiency, Brinks will be required to publish local notice of his application, if he has not already done so, and to file a statement of publication with the presiding Administrative Law Judge.

5. Analysis of the financial portion of Brinks' application reveals that Brinks will require $44,446 to construct his proposed facility and operate for three months, without revenue, itemized as follows:

Equipment down payment	$14,500
Equipment payments with interest	4,446
Bank loan payments	1,000
Miscellaneous	14,500
Three months' operating expenses	10,000
Total	$44,446

To meet this requirement, Brinks intends to rely on a loan from the First National Bank of Dothan in the amount of $25,000, existing capital in the amount of $20,000 and deferred credit from an equipment supplier. The commitment letter in support of the loan did not specify the interest rate or terms of repayment in accordance with Paragraph 4(e), Section III of Form 301. An examination of Brinks' balance sheet reveals that his current liabilities exceed his current assets. Brink states in Section III that he has $13,000 on hand in the Fulton National Bank, but this is nowhere reflected in this balance sheet. As a result, we cannot find that he has any amount in existing capital to support his commitment. In addition, Brinks failed to submit a commitment letter from an equipment supplier showing that deferred credit is available. Accordingly, a general financial issue will be specified.

6. Brinks' ascertainment survey is not in substantial compliance with the *Primer.* The applicant has failed to consult leaders of the elderly in accordance with Questions 4 and 20. Furthermore, Brinks also failed to state (i) the dates of the community leader and general public surveys, and (ii) whether the general public survey was conducted in a manner which assured that a random sample of the population was contacted. Accordingly, a limited ascertainment issue will be specified.

7. *Casey.* The applicant has requested a waiver of Section 73.210 of the Commission's Rules to permit its main studio to be located outside the city of license. We will not rule on the request at this juncture. Rather, an issue will be specified so that the matter may be explored in hearing.

8. Casey has yet to receive FAA clearance for its proposed tower. Therefore, an air hazard issue will be specified.

9. The applicant originally filed as Lois V. Casey, an individual. Subsequently Ms. Casey amended her application to reflect a change to corporate status. The original notice published by Ms. Casey reflected only her status as an individual. Casey did not republish notice of the major amendment. To remedy this deficiency, the applicant will be required to republish local notice, if it has not already done so, and file a statement of publication with the presiding Administrative Law Judge.

10. *Charlton.* The applicant has requested that it be licensed to serve both St. Marys and Kingsland pursuant to Section 72.210(b) of the Rules. The Rule requires that the applicant make a "satisfactory showing that an unreasonable burden would be placed on the station if it were licensed to serve only one city, town, political subdivision or community," and the proposed co-communities of license must exhibit" an identity of interests for programming and other purposes sufficient to warrant dual city identification." *Saul M. Miller,* 4 FCC 2d 150, 8 RR 2d 148, *aff'd per curiam, Miller v. FCC,* 9 RR 2d 2031 (D.C. Cir. 1967). St. Marys and Kingsland do exhibit such an identity of interests. Both communities have common problems and needs, and Charlton has proposed programming designed to meet the needs of both communities. Charlton will divide equally 90% of its proposed 300 PSA's per week between St. Marys and Kingsland. Charlton has stated that serving only one community would result in unnecessary hardship and that there is a direct benefit to the applicant to be able to identify as "local" to both communities for purposes of attracting advertising revenue and public support. The Commission has traditionally required only a minimal showing with respect to economic and programming hardship. *Hymen Lake,* 46 FCC 2d 561, 565 (Rev. Bd. 1974). Accordingly, Radio Charlton has made a satisfactory showing under Section 73.210(b) of the Rules and its request for dual city licensing is granted.

11. Charlton will not be able to provide a 3.16 mV/m signal to the entire city of St. Marys as required by Section 73.315(a) of the Commission's Rules. Charlton has asked for a waiver of this provision. Only 2.3% of the population of St. Marys would lie beyond the 3.16 mV/m signal contour. We will not rule on the waiver request at this juncture. Rather, a city coverage issue will be specified so that the matter may be explored in hearing.

12. Except as indicated by the issues specified below, the applicants are qualified to construct and operate as proposed. However, since the proposals are mutually exclusive, they must be designated for hearing in a consolidated proceeding on the issues specified below.

13. Accordingly, it is ordered, That, pursuant to Section 309(e) of the Communications Act of 1934, as amended, the applications are designated for hearing in a consolidated proceeding, at a time and place to be specified in a subsequent Order, upon the following issues:

1. To determine whether the proposal of Casey to locate its main studio outside its community of license is in compliance with Section 73.315(a) of the Commission's Rules with respect to location of the main studio and, if not, whether circumstances exist which warrant a waiver of that Section.

2. To determine whether there is a reasonable possibility that the tower height and location proposed by Casey would constitute a hazard to air navigation.

3. To determine with respect to the efforts of Camden to ascertain the needs of its proposed service area:

(a) Whether the applicant interviewed leaders of blacks and the elderly in accordance with Questions 4 and 20;

(b) Whether the applicant specified the dates of the community leader and general public survey in accordance with Questions and Answers 2 and 15.

4. To determine whether the proposal of Charlton would provide coverage of the city sought to be served as required by Section 73.315(a) of the Commission's Rules, and, if not, whether circumstances exist which warrant a waiver of that Section.

5. To determine whether Brinks is financially qualified to construct and operate the proposed station.

6. To determine with respect to the efforts of Brinks to ascertain the needs of its proposed service area:

(a) Whether the applicant interviewed leaders of the elderly in accordance with Questions and Answers 4 and 20;

(b) Whether the applicant specified the dates of the community leader and general public survey in accordance with Questions and Answers 2 and 15;

(c) Whether the interviews with members of the general public were conducted in such a manner to assure that a random sample of the population was contacted.

7. To determine the areas and populations which would receive primary aural service (1 mV/m or greater in the case of FM) from the respective proposals and the availability of other primary service to such areas and populations.

8. To determine, in the light of Section 307(b) of the Communications Act of 1934, as amended, which of the proposals would best provide a fair, efficient and equitable distribution of radio service.

9. To determine, in the event it is concluded that a choice between the applications should not be based solely on considerations relating to Section 307(b), which of the proposals would, on a comparative basis, best serve the public interest.

10. To determine, in the light of the evidence adduced pursuant to the foregoing issues, which, if any, of the applications should be granted.

14. It is further ordered, That Camden Brinks and Casey file a statement of publication with the presiding Administrative Law Judge as described in Section 73.3580(h) of the Rules.

15. It is further ordered, That if the Casey application is granted, the permit shall specify that the provisions of Section 73.210 of the Commission's Rules are waived to permit the studio to be located outside the city of license.

16. It is further ordered, That the Federal Aviation Administration is made a party to the proceeding.

17. It is further ordered, That if the Charlton application is granted, the permit shall specify that the provisions of Section 73.315(a) of the Commission's Rules are waived to permit a signal level of less than 3.16 mV/m over the entire city of St. Marys, Georgia.

18. It is further ordered, That, to avail themselves of the opportunity to be heard, the applicants herein shall, purusuant to Section 1.221(c) of the Commission's Rules, in person or by attorney, within 20 days of the mailing of this Order, file with the Commission in triplicate a written appearance stating an intention to appear on the date fixed for the hearing and to present evidence on the issues specified in this Order.

19. It is further ordered, That the applicants herein shall, pursuant to Section 311(a)(2) of the Communications Act of 1934, as amended, and Section 73.3594(g) of the Commission's Rules, give notice of the hearing (either individually or, if feasible and consistent with the Rules, jointly) within the time and in the manner prescribed in such Rule, and shall advise the Commission of the publication of such notice as required by § 73.3594(g) of the Rules.

Federal Communications Commission.

Jerold L. Jacobs,

Chief, Broadcast Facilities Division.

[FR Doc. 80-23595 Filed 8-5-80; 8:45 am]

BILLING CODE 6712-01-M

[BC Docket Nos. 80-403—80-405; File Nos. BPH 780717AC, etc.]

Denair Broadcasting Co., Inc., et al; Hearing Designation Order Designating Applications for Consolidated Hearing on Stated Issues

Adopted: July 16, 1980.

Released: July 30, 1980.

In re applications of Denair Broadcasting Company, Inc. Denair, California, BC DOCKET NO. 80-403, File No. BPH-780717AC, Req: 95.9 MHz, Channel 240A 3.0 kW (H&V), 177 feet; Denair Wireless Co., Inc., Denair, California, BC DOCKET NO. 80-404, File No. BPH-790115AC, Req: 95.9 MHz, Channel 240A 3.0 kW (H&V), 300 feet; Robert J. Parreno, R. C. Duckett and William H. Colclough, a Joint Venture d.b.a. All-American Broadcasting Company, Delhi, California, BC DOCKET NO. 80-405, File No. BPH-790117AB; Req: 95.9 MHz, Channel 240A 3.0 kW (H&V), 300 feet; for a construction permit for a New FM Station.

1. The Commission, by the Chief, Broadcast Bureau, acting pursuant to delegated authority, has before it for consideration the above-captioned mutually exclusive applications of Denair Broadcasting Company, Inc. (DBC), Denair Wireless Co., Inc. (Wireless), and Robert J. Parreno, R. C. Duckett and William H. Colclough, a Joint Venture d.b.a. All-American Broadcasting Company (All-American) for a construction permit for a new FM station.

2. *DBC.* The applicant has not provided us with a current FAA clearance. Accordingly, an appropriate issue will be specified.

3. *Wireless.* Anthony D. Naish, a principal of the applicant, is an alien and has subscribed for a permissible 20% of the applicant's stock. Naish, however, is also an officer of RNF Media Corporation, Inc. (RNF), an entity in which three of the applicant's four principals own 99% of the stock. Of the $86,000 which the applicant claims it possesses to finance its proposal to construct and operate the station, RNF has agreed to loan the applicant $85,000. The loan is unsecured and need be repaid only at the demand of RNF. In view of RNF's financial control over the applicant and the substantial identity of RNF and the applicant, we believe that an issue is warranted as to whether Wireless is in violation of Section 310(b)(4) of the Communications Act of 1934, as amended. That section provides that no entity, of which an alien is an officer, may indirectly control an applicant for a broadcast license. An issue will, therefore, be specified to determine whether RNF indirectly controls Wireless.

4. Applicants for new broadcast stations are required by Section 73.3580(f) of the Commission's Rules to give local notice of the filing of their applications. They must then file with the Commission the statement described in Section 73.3580(h) of the Rules. We have no evidence that Wireless published the required notice. To remedy this deficiency, Wireless will be required to publish local notice of its application and to file a statement of publication with the presiding Administrative Law Judge.

5. *All-American.* The applicant filed a petition for leave to amend on May 9, 1980, beyond the date prescribed by the Commission for amending its application as of right. The amendment consists of a Small Business Administration guarantee of a loan procured by the applicant. The loan agreement was filed within the time for

amending the application as of right. Since the guarantee of the loan does not improve the applicant's comparative position, the petition for leave to amend will be granted and the corresponding amendment will be accepted under Section 73.3522(a)(2) of the Commission's Rules.

6. The applicant indicated that it will establish an auxiliary studio at its transmitter site, in addition to the main studio in Delhi, the community of license. All-American requested a waiver of Section 73.1130 of the Commission's Rules, consistent with *Arizona Communications Corporation*, 25 FCC 2d 837 (1970), *recon. denied*, 27 FCC 2d 283 (1971), as it appears to have proposed to originate a majority of its programs, exclusive of all its recorded music programs, at the Delhi main studio, with the remainder originating from the auxiliary studio. Therefore, the applicant's waiver request will be granted.

7. The respective proposals are for different communities. Consequently, it will be necessary to determine pursuant to Section 307(b) of the Communications Act of 1934, as amended, which of the proposals would best provide a fair, efficient and equitable distribution of radio services.

8. Except as indicated by the issues specified below, the applicants are qualified to construct and operate as proposed. However, since the proposals are mutually exclusive, they must be designated for hearing in a consolidated proceeding on the issues specified below.

9. Accordingly, It Is Ordered, That pursuant to Section 309(e) of the Communications Act of 1934, as amended, the applications Are Designated For Hearing in a Consolidated Proceeding, at a time and place to be specified in a subsequent Order, upon the following issues:

1. To determine whether there is a reasonable possibility that the tower height and location proposed by Denair Broadcasting Company, Inc. would constitute a hazard to air navigation.

2. To determine whether Denair Wireless Co., Inc.'s proposal complies with Section 310(b)(4) of the Communications Act of 1934, as amended.

3. To determine the areas and population which would receive primary aural service (1 mV/m or greater in the case of FM) from the proposals and the availability of other primary service to such areas and populations.

4. To determine, in the light of Section 307(b) of the Communications Act of 1934, as amended, which of the proposals would best provide a fair, efficient and equitable distribution of radio service.

5. To determine, in the event it is concluded that a choice between the applications should not be based solely on considerations relating to Section 307(b), which of the proposals would, on a comparative basis, best serve the public interest.

6. To determine, in the light of the evidence adduced pursuant to the foregoing issues, which of the applications should be granted.

10. It is Further Ordered, That Wireless file a statement of publication of local notice of its application with the presiding Administrative Law Judge, in accordance with § 73.3580(f) of the Commission's Rules.

11. It is Further Ordered, That the petition for leave to amend filed by All-American Is Granted, and the corresponding amendment is Accepted.

12. It is Further Ordered, That the Federal Aviation Administration IS MADE A PARTY to the proceeding.

13. It is Further Ordered, That if the All-American application is granted, the permit shall specify that the provisions of § 73.1130 of the Commission's Rules are waived.

14. It is Further Ordered, That in the event of a grant of the application of either DBC, Wireless or All-American, the construction permit shall contain the following condition:

Program tests will not be authorized until KLBS-FM, Los Banos, California, is authorized program tests on Channel 284; and a license will not be issued until KLBS-FM is issued a license on Channel 284.

15. It is Further Ordered, That, to avail themselves of the opportunity to be heard, the applicants herein shall, pursuant to Section 1.221(c) of the Commission's Rules, in person or by attorney, within 20 days of the mailing of this Order, file with the Commission in triplicate a written appearance stating an intention to appear on the date fixed for the hearing and to present evidence on the issues specified in this Order.

16. It is Further Ordered, That the applicants herein shall, pursuant to Section 311(a)(2) of the Communications Act of 1934, as amended, and § 73.3594(g) of the Commission's Rules, give notice of the hearing (either individually or, if feasible and consistent with the Rules, jointly) within the time and in the manner prescribed in such Rule, and shall advise the Commission of the publication of such notice as required by § 73.3594(g) of the Rules.

Federal Communications Commission.

Jerold L. Jacobs,

Chief, Broadcast Facilities Division, Broadcast Bureau

[FR Doc. 80-23593 Filed 8-5-80; 8:45 am]

BILLING CODE 6712-01-M

[BC Docket Nos. 80-413—80-414; File No. BPH-780929 AP, BPH-79032AE]

Everybody's Mood, Inc., and Hilltop Radio, Inc.; Hearing Designation Order Designating Applications for Consolidated Hearing on Stated Issues

In re Applications of Everybody's Mood, Inc., West Salem, Wisconsin, BC Docket No. 80-413, File No. BPH-780929AP, Req: 100.1 MHz, Channel 261, 2.5 KW (H&V), 344 feet; Hilltop Radio, Inc., West Salem, Wisconsin, BC Docket No. 80-414, File No. BPH-790328AE, Req: 100.1 MHz, Channel 261 3.0 KW (H&V), 300 feet; For construction permit for a New FM Station.

Adopted: July 2, 1980.

Released: July 29, 1980.

1. The commission, by the Chief, Broadcast Bureau, acting pursuant to delegated authority, has under consideration: (1) the above-captioned mutually exclusive applications of Everybody's Mood, Inc. (Everybody) and Hilltop Radio, Inc. (Hilltop), (ii) a petition to dismiss or deny filed by Everbody,[1] and (iii) related pleadings thereto.

2. On September 29, 1978, Everybody tendered for filing its application for Channel 261 in West Salem. The cut-off date for filing applications for that channel was March 28, 1979 and on that date the Hilltop application was filed. On May 21, 1979, Everybody filed its petition to dismiss or deny. The substance of this petition alleged that Hilltop's application was not substantially complete by the March 28, 1979 cut-off date in that it failed to list a properly available transmitter site. However Hilltop, by amendment dated May 7, 1979 rectified its application by specifying an available site. In its opposition to Everybody's petition filed on June 5, 1979, Hilltop included the affidavit of Dr. Bruce A. Polender, President of Hilltop, which attempted to explain the change in tower sites. This affidavit states: "Our group felt the original site would be available * * * and so instructed our engineer * * *. At the time of filing our application, we

[1] Pursuant to the Commission's recent decision in *K&L Communications, Inc.*, 70 FCC 2d 1987, 45 RR 2d 187 (1979), everybody's petition will be treated as an informal objection and will be disposed of in accordance with the policies expressed in Section 0.281(b)(1) of the Rules.

discovered that the proposed site * * * was not available due to an exclusive option to lease to the other applicant * * *. We then immediately sought another acceptable site * * *. We did not have enough time to complete the new engineering data prior to submitting our application. We obtained an option for land use * * * and completed the new required engineering as rapidly as possible." It is these facts that from, the basis for Everybody's position that the Hilltop application must be dismissed "for deliberate misstatement and gross errors in significant areas."

3. Upon review of the facts and legal arguments before us, it is unclear whether Hilltop's actions constitute either deliberate misrepresentation or a violation of Commission requirements for substantial completeness of an application. The affidavit of Dr. Polender, as well as failing to meet the personal knowledge requirements of Section 309(d)(1) of the Act, as amended, is ambiguous as to how and when the events surrounding Hilltop's application transpired. Such ambiguity makes resolution of the issued raised by Everybody impossible at this stage of the proceedings. Therefore, on the basis of the foregoing, we conclude that further inquiry at hearing is warranted and a misrepresentation issue will be added.

4. As a further matter, the balance sheet submitted by Ellsworth Dissmore fails to support his commitment to donate certain equipment worth $15,326, and an appropriate issue is required.

5. Except as indicated by the issues specified below, the applicants are qualified to construct and operate as proposed. However, since the proposals are mutually exclusive, they must be designated for hearing in a consolidated proceeding on the issues specified below.

6. Accordingly, it is ordered, That, pursuant to Section 309(e) of the Communications Act of 1934, as amended, the applications are designated for hearing in a consolidated proceeding, at a time and place specified in a subsequent Order, upon the following issues:

1. To determine whether Hilltop misrepresented the availability of a transmitter site in its application and, if so, the effect thereof on the applicant's qualifications to be a Commission licensee.

2. To determine with respect to Hilltop:

(a) the source and availability of equipment worth $15,236 to be donated by Ellsworth Dissmore; and

(b) whether in light of the evidence adduced pursuant to (a) above, the applicant is financially qualified.

3. To determine which of the proposals would, on a comparative basis, better serve the public interest.

4. To determine, in light of the evidence adduced pursuant to the foregoing issues, which of the applications should be granted.

7. It is further ordered, That the petition to dismiss or deny filed by Everybody is Granted to the extent indicated herein, and is Denied in all other respects.

8. It is further ordered, That, to avail themselves of the opportunity to be heard, the applicants herein shall, pursuant to Section 1.221(c) of the Commission's Rules, in person or by attorney, within 20 days of the mailing of this Order, file with the Commission, in triplicate, a written appearance stating an intention to appear on the date fixed for the hearing and to present evidence on the issues specified in this Order.

9. It is further ordered, That the applicants herein shall, pursuant to Section 311(a)(2) of the Communications Act of 1934, as amended, and §73.3594(g) of the Commission's Rules, give notice of the hearing (either individually or, if feasible and consistent with the Rules, jointly within the time and in the manner prescribed in such Rule, and shall advise the Commission of the publication of such notice as required by § 73.3594(g) of the Rules.

Federal Communications Commission.

Jerold L. Jacobs,

Chief, Broadcast Facilities Division.

[FR Doc. 80-23590 Filed 8-5-80; 8:45 am]

BILLING CODE 6712-01-M

[BC Docket Nos. 80-352—80-353; File Nos. BPH-10877, BPH-780719AA]

Grants Pass Broadcasting Co. et al.; Designating Applications for Consolidated Hearing on Stated Issues

Hearing Designation Order

Adopted: June 20, 1980.

Released: July 29, 1980.

In the matter of applications of James O. Wilson, Jr. and Elzie B. Parker, d/b/a Grants Pass Broadcasting Company, Grants Pass, Oregon, Req: 96.9 MHz, Channel 245 27.1 kW (H&V),—450 feet, BC Docket No. 80-352, File No. BPH-10877; William John Miner, Linda Jo Miner and Lawrence Brent Miner, d/b/a Lindavox, Grants Pass, Oregon, Req: 96.9 MHz, Channel 245 25 kW (H&V), 565 feet, BC Docket No. 80-353, File No. BPH-780719AA, for a construction permit for a New FM station.

1. The Commission, by the Chief, Broadcast Bureau, acting pursuant to delegated authority, has under consideration the above-captioned mutually exclusive applications of James O. Wilson, Jr. and Elzie B. Parker, d/b/a Grants Pass Broadcasting Company (Wilson) and William John Miner, Linda Jo Miner and Lawrence Brent Miner, d/b/a Lindavox (Lindavox).

2. *Wilson.* The applicant proposes to duplicate the existing programming of its commonly owned station, KAJO. Therefore, evidence regarding program duplication will be admissible under the standard comparative issue. When duplicated programming is proposed, the showing permitted will be limited to evidence concerning the benefits to be derived from the proposed duplication which would offset its inefficiency. *Jones T. Sudbury,* 8 FCC 2d 360, 10 RR 2d 114 (1967).

3. *Lindavox.* Analysis of the financial data submitted by Lindavox reveals that $78,462 will be required to construct the proposed station and operate for three months, itemized as follows:

Equipment payments	$53,962
Land	500
Buildings	4,000
Miscellaneous	8,500
Operating costs (three months)	11,500
Total	78,462

Lindavox plans to finance construction and operation with the following funds:

Cash from William and Linda Miner	$8,000
Cash from Lawrence Miner	12,800
Aged and certified accounts receivable at 75%	13,105
Loan from Family Bank of Commerce	50,000
Loan from Zion First National Bank	40,000
Total	123,905

Lindavox has not however, provided documentation that the accounts receivable are actually aged and certified for the indicated value. The $50,000 loan letter from the Family Bank of Commerce fails to comply with Paragraph 4(e) of Section III in that it does not specify the interest rate of the loan or the terms of repayments. Also, the $90,000 loan commitment letter from Zion First National Bank, of which Lindavox proposes to use only $40,000 for its station, expired by its own terms on June 16, 1979, because Lindavox did not apply for the loan by that date. The applicant has, therefore, shown only $20,800 available to meet a requirement of $78,462. The applicant has also failed to file a balance sheet for the partnership showing current assets and current liabilities, as required by Paragraph 2(a) of Section III. Accordingly, a limited financial issue will be specified.

4. Informal objections to the Lindavox application were filed by the Oregon State Department of Forestry (Forestry) and Pacific Power and Light Company (Pacific) alleging that operation as proposed with 25 kW effective radiated power from the Beacon Hill transmitter site might cause interference to Forestry's station KXU-350 in the Forestry—Conservation Radio Service and Pacific's station KOC-480 in the Power Radio Service. Under normal circumstances, interference between these existing operations and the Lindavox proposal would not occur. Thus, the objections are based solely on speculation. Nevertheless, it has long been our policy to require new stations to be responsible, financially and otherwise, for the elimination of any problems which may occur. In light of this policy, neither the exploration of this matter in hearing nor the imposition of a condition on Lindavox's construction permit, should it prevail in this proceeding, is necessary. *Athens Broadcasting Co. Inc.*, 68 FCC 2d 920 (1978). Accordingly, the objections will be denied.

5. *Other matters.* Data submitted by the applicants indicate that there would be a significant difference in the size of the areas and populations which would receive service from the proposals. Consequently, for the purpose of comparison, the areas and populations which would receive FM service of 1 mV/m or greater strength, together with the availability of other primary aural services in such areas will be considered under the standard comparative issue for the purpose of determining whether a comparative preference should accrue to either of the applicants.

6. Except as indicated by the issues specified below, the applicants are qualified to construct and operate as proposed. However, since the proposals are mutually exclusive, they must be designated for hearing in a consolidated proceeding on the issues specified below.

7. Accordingly, it is ordered, that pursuant to Section 309(e) of the Communications Act of 1934, as amended, the applications are designated for hearing in a consolidated proceeding, at a time and place to be specified in a subsequent Order, upon the following issues:

1. To determine with respect to William John Miner, Linda Jo Miner and Lawrence Brent Miner, d/b/a/ Lindavox:

(a) The source and availability of additional funds over and above the $20,800 indicated; and

(b) The light of the evidence adduced pursuant to (a) above, whether the applicant is financially qualified to construct and operate the proposed station.

2. To determine which of the proposals would, on a comparative basis, better serve the public interest.

3. To determine, in light of the evidence adduced pursuant to the foregoing issues, which, if either, of the applications should be granted.

8. It is further ordered, that the informal objections by the Oregon State Department of Forestry and the Pacific Power & Light Company are denied.

9. It is further ordered, that, to avail themselves of the opportunity to be heard, the applicants herein shall, pursuant to § 1.221(c) of the Commission's rules, in person or by attorney, within 20 days of the mailing of this Order, file with the Commission in triplicate a written appearance stating an intention to appear on the date fixed for the hearing and to present evidence on the issues specified in this Order.

10. It is further ordered, that the applicants herein shall, pursuant to Section 311(a)(2) of the Communications Act of 1934, as amended, and § 73.3594 of the Commission's rules, give notice of the hearing (either individually or, if feasible and consistent with the rules, jointly) within the time and in the manner prescribed in such rule, and shall advise the Commission of the publication of such notice as required by § 73.3594(g) of the rules.

Federal Communications Commission.

Jerold L. Jacobs,

Chief, Broadcast Facilities Division.

[FR Doc. 80-23591 Filed 8-5-80; 8:45 am]

BILLING CODE 6712-01-M

[BC Docket Nos. 80-356—80-359; File Nos. BPH-790129AE etc.]

Hispanic Broadcasting Co., et al.; Designating Applications for Consolidated Hearing on Stated Issues

Hearing Designation Order

Adopted: June 26, 1980.

Released: July 29, 1980.

In the matter of applications of Hispanic Broadcasting Co., Las Vegas, Nevada, Req: 96.3 MHz, Channel 242, 31.5 kW (H&V), 1529 feet, BC Docket No. 80-356, File No. BPH-790129AE; Pan American Broadcasting Company, Inc., Las Vegas, Nevada, Req: 96.3 MHz, Channel 242, 31.38 kW (H&V), 1252 feet, BC Docket No. 80-357, File No. BPH-790524AC; Jomay Broadcasting, Inc., Las Vegas, Nevada, Req: 96.3 MHz, Channel 242, 100 kW (H&V), 1131 feet, BC Docket No. 80-358, File No. BPH-790529AH; Galaxy Broadcasting Corp., Las Vegas, Nevada, Req: 96.3 MHz, Channel 242, 100 kW (H&V), minus 11 feet, BC Docket No. 80-359, File No. BPH-790530AI, For Construction Permit For A New FM Station.

1. The Commission, by the Chief, Broadcast Bureau, acting pursuant to delegated authority, has under consideration: (i) The above captioned mutually exclusive applications filed by Hispanic Broadcasting Co. (Hispanic), Pan American Broadcasting Company, Inc. (Pan American), Jomay Broadcasting, Inc. (Jomay) and Galaxy Broadcasting Corp. (Galaxy); (ii) a petition to reject and/or dismiss filed by Jomay against Galaxy; and (iii) related pleadings.

2. *Hispanic.* Analysis of the financial data submitted by Hispanic reveals that $41,893 will be required to construct the proposed station and operate for three months, itemized as follows:

Equipment (lease)	$1,815
Building	1,000
Miscellaneous	11,500
Operating Costs (three months)	27,578
Total	41,893

Though applicant is leasing the equipment for the purpose of deferring credit, its failure to provide a copy of the lease-purchase agreement makes it impossible to determine the extent of the deferred credit. Hispanic plans to finance construction and operation with the following funds: (i) Existing capital of $5,500; and (ii) new capital of $36,393. Because Hispanic has not complied with FCC Form 301, Section III paragraph 2(a)'s request for applicant's balance sheet, it is impossible to evaluate Hispanic's claim of $5,500 of existing capital. David P. Boyer, Jr. is, after various amendments, the only shareholder who will furnish funds to the applicant and the sole source of new capital, yet no evidence of any commitment by Mr. Boyer exists as required by Section III, Paragraph 4(a) of Form 301. Analysis of Mr. Boyer's balance sheet reveals that his net liquid assets do not exceed $4,000. This amount is insufficient to meet applicant's construction and operating expenses. Accordingly, a general financial issue will be specified.

3. Hispanic has failed to comply with the requirements of the *Primer on Ascertainment of Community Problems by Broadcast Applicants,* 27 FCC 2d 650, 21 RR 2d 1507 (1971). From the information before us, Hispanic has not included a description of the composition of Las Vegas, indicating "the minority, racial or ethnic breakdown of the community, its economic activities, governmental activities, public service organizations, and any other factors or activities that make the particular community distinctive" as required by Question and Answer 9 of the *Primer.* While the absence of a demographic study makes it difficult to determine which groups in Las Vegas are significant for the purpose of the community leader survey, it is apparent that applicant has failed to interview leaders of groups that would seem significant in Las Vegas, such as blacks, elderly, labor, and the military, among others, as required by Questions and Answers 10, 13(a) and 16 of the *Primer.* Because applicant failed to identify the community of the leaders it did interview, it is impossible to determine the extent of applicant's ascertainment of the problems of major communities which are outside the city of license and which the applicant intends to serve as required by Question and Answer 7 of the *Primer.* Accordingly, a general ascertainment issue will be specified.

4. *Pan American.* Analysis of the financial data submitted by Pan American reveals that $66,203.75 will be required to construct the proposed station and operate for three months, itemized as follows:

Equipment down payment	$4,857
Equipment payments with interest	12,142.50
Land	4,500
Building	1,750
Miscellaneous	15,000
Operating Costs (3 months)	27,954.25
Total	66,203.75

Both the equipment payment terms from Dyma Engineering and the lease agreement for applicant's transmitter site have expired, thus increasing costs. Applicant plans to finance construction and operation with the following funds: (i) $10,000 in cash; (ii) stock commitments by Jorge Santanilla for $10,000; by Doris Drucker for $10,000; by Donna Wiley for $40,000; and by John McDermott for $5,000; and (iii) a $100,000 loan from the Marquette Partnership. It is impossible to determine applicant's financial position within ninety days of the date of the application, as required by FCC Form 301, Section III 2(a), because applicant's balance sheet is not dated. Analyzing the balance sheets of the prospective stock purchasers, neither Mr. Santanilla nor Ms. Drucker has any current liquid assets in excess of current liabilities and thus cannot meet any part of their respective commitments.[1] Ms. Wiley can meet her commitment while Mr. McDermott has only $3,200 in net liquid assets to contribute to the applicant.[2] Applicant has not submitted any evidence of a commitment of a $100,000 loan by the Marquette Partnership, as required by Section III, Para. 4(a) of Form 301, and analysis of the Marquette's balance sheet shows no current liquid assets in excess of current liabilities, resulting in a total inability to meet its loan commitment. Applicant has only $43,200 in funding, an amount insufficient to meet construction and operating costs of $66,203.75. Accordingly, a limited financial issue will be specified.

5. Pan American has not shown Federal Aviation Administration approval for its tower site. Accordingly, an issue will be specified and the FAA will be made a party to the proceeding.

6. *Jomay.* Analysis of the financial data submitted by applicant reveals that $133,084.04 will be required to construct the proposed station and operate for three months, itemized as follows:

Equipment purchase outright	$3,000.00
Equipment down payment	31,054.03
Equipment payments with interest	8,229.41
Building	5,000.00
Miscellaneous	31,000.00
Operating Costs (3 months)	54,800.00
Total	133,084.04

Jomay plans to finance construction and operation with the following funds: (i) $6,500.00 in existing capital; and (ii) $144,000 in loan commitments from shareholders apportioned as follows: (a) Donald S. Gilday, $169,120; (b) Phillip Engel, $24,000; (c) Jerry Engel, $24,000; (d) M. V. Stober, $19,200; and (e) Thomas J. Graves, $7,680. While commitment letters and balance sheets have been submitted in support of these loans, no interest rate, repayment or collateral terms are shown. Moreover, Mr. Gilday has submitted a balance sheet of his and his wife's assets, while the loan commitment is solely his. Analysis of the balance sheets supporting the proposed loans shows that while Messrs. P. Engel and Stober have sufficient net liquid assets to meet their commitments of $24,000 and $19,200 respectively, Mr. Gilday has only $6,293 in net liquid assets, an amount insufficient to meet his commitment of $69,120, and Messrs. J. Engel and Graves have no net liquid assets to meet their commitments of $24,000 and $7,680 respectively. Thus, the applicant has $55,993 in funding, an amount insufficent to meet expenses of $133,084.04. Accordingly, a limited financial issue will be specified.

7. Jomay has failed to comply with the requirements of Questions and Answers 10, 13(a) and 16 of the *Primer* in failing to survey leaders of significant population groups set forth in its demographic study. For example, blacks constituted approximately 8 percent of the population of Las Vegas in the 1970 Census, yet applicant has interviewed no leaders of black groups. The applicant's compositional study states

[1] Current liabilities were not segregated from long term liabilities and therefore all liabilities were considered current.

[2] Mr. McDermott proposed to rely upon his stock holding as well as his cash on hand. However Question 4b of FCC Form 301 requires that securities must be identified by the type of security, name of issuer, name of the market on which it is traded, and current value. Mr. McDermott did not offer any of the required information.

that Nellis Air Force Base is one of the largest employers in Southern Nevada, but no leaders of the military have been interviewed. Jomay has also not interviewed any leaders of recreation groups or professional groups. Therefore, a limited ascertainment issue will be specified.

8. *Galaxy.* Analysis of the financial data submitted by Galaxy reveals that $136,038 will be required to construct the proposed station and operate for three months, itemized as follows:

Equipment down payment	$43,400
Equipment payments with interest	8,638
Building	10,000
Miscellaneous	14,000
Operating Costs (3 months)	60,000
Total	136,038

The equipment down payment and payments with interest costs could not be verified as Galaxy has not included the equipment supplier's letter evidencing its willingness to supply credit as required by Section III, Para. 4(e) of FCC Form 301. Galaxy plans to finance construction and operation with the following funds: (i) $10,000 in existing capital; and (ii) $300,000 in stock subscriptions from 10 subscribers. Because applicant's balance sheet is not dated it cannot be determined whether the balance sheet reflects applicant's financial position at the close of a month within 90 days of the date of application as required by Section III, Para. 2 of Form 301. None of the anticipated stock subscriptions totalling $300,000 can be verified because none are supported by commitment letters as required by Section III, Para. 4(a) of Form 301, and none, except one, are supported by balance sheets, as required by Section III, Para 4(b). While the applicant has submitted the balance sheet of Rafael E. and Charleen Vega, only Mr. Vega is listed as a stock subscriber, and there is no evidence that joint assets could be relied upon. Moreover, analysis of the balance sheet shows that there are no net liquid assests to meet Mr. Vega's commitment of $16,140. Accordingly, a general financial issue will be specified.

9. Galaxy has failed to comply with the requirements of the *Primer*. From the information before us, it appears that the applicant has failed to survey leaders of significant population groups set forth in its demographic study, as required by Questions and Answers 10, 13(a) and 16 of the *Primer*. For example, according to applicant's compositional study, women constitute 49.9% and blacks 11% of Las Vegas' population (1970 Census), yet applicant surveyed no leaders of groups representing women or blacks. The applicant has also not surveyed leaders of groups representing labor, military, professionals, consumer services, culture or religion. Additionally, it is impossible to determine whether applicant had conducted the general public survey within six months prior to filing, as required of Question and Answer 15, as the date was not disclosed. Since applicant has not discussed the methodology of its general public survey, it is impossible to determine whether the random sample required by Question and Answer 13(b) was achieved. Accordingly, a general ascertainment issue will be specified.

10. *Other matters.* Jomay filed a petition to reject and/or dismiss the application of Galaxy, on August 21, 1979, on the grounds that Galaxy's application as tendered for filing was not substantially complete at the close of business on May 30, 1979, the cut-off date, as required by the Commission's April 11, 1979 Public Notice establishing the cutoff date, and § 73.3564 of the Commission's rules.[3] The "omissions and/or deficiencies" enumerated by petitioner include: (1) No certified articles of incorporation; (ii) no certified By-Laws; (iii) failure to include a variety of information and documents required by Section III of Form 301; and (v) an incomplete ascertainment survey. Thus, petitioner argues, Galaxy's application was incomplete as filed and should be either rejected or dismissed. Galazy's opposition to the petition, filed September 20, 1979 asserts that its application was substantially complete when filed, that the Commission was notified at the time of filing that certified copies of the articles of incorporation and the by-laws would be filed later and were subsequently filed, and that the application, as substantially complete, must be accepted for filing and processed by the Commission. Jomay's reply to Galaxy's opposition asserts: (i) That Galaxy's pleading was tardy and should have been filed September 6, 1979 according to § 1.45 of the Commission's rules; and (ii) that Galaxy's community leader survey was filed after the May 30 cutoff date.

11. Following the ruling in *K & L Communications, Inc.*, 70 FCC 2d 1987, 45 RR 2d 187 (1979), petitions to dismiss applications which have been accepted for filing on the grounds that these applications are defective or incomplete will be treated by the staff as informal objections and disposed of in accordance with § 0.281(b)(1). We find that the application, as originally filed, was not so patently violative of the rules as to render processing a "futile gesture", *K & L Communications, Inc., supra*, since the deficiencies could have been made the subject of issues in the hearing order and, in fact, have been insofar as they still remain. Moreover, the absence of the articles of incorporation, by-laws and portions of the community leader survey have been resolved by amendments filed as of right before the amendment cut-off date of February 8, 1980. Accordingly, the petition will be granted to the extent indicated, and denied in all other respects.

12. Data submitted by the applicants indicate that there would be a significant difference in the size of the areas and populations which would receive service from the proposals. Consequently, for the purpose of comparison, the areas and populations which would receive FM service of 1 mV/m or greater intensity, together with the availability of other primary aural services in such area, will be considered under the standard comparative issue, for the purpose of determining whether a comparative preference should accrue to any of the applicants.

13. Except as indicated by the issues specified below, the applicants are qualified to construct and operate as proposed. However, since the proposals are mutually exclusive, they must be designated for hearing in a consolidated proceeding on the issues specified below.

14. Accordingly, it is ordered, That, pursuant to Section 309(e) of the Communications Act of 1934, as amended, the applications are designated for hearing in a consolidated proceeding, at a time and place to be specified in a subsequent Order, upon the following issues:

1. To determine whether Hispanic is financially qualified to construct and operate the proposed station.

2. To determine the efforts made by Hispanic to ascertain the community needs and problems of the area to be served and the means by which the

[3] The relevant subsections of § 73.3564 are (a) and (b) which provide as follows:

(a) Applications tendered for filing are dated upon receipt and then forwarded to the Broadcast Bureau, where an administrative examination is made to ascertain whether the applications are complete. Applications found to be complete or substantially complete are accepted for filing and are given a file number. In case of minor defects as to completeness, the applicant will be required to supply the missing information. Applications which are not substantially complete will be returned to the applicant.

(b) Acceptance of an application for filing merely means that it has been the subject of a preliminary review by the FCC's administrative staff as to completeness. Such acceptance will not preclude the subsequent dismissal of the application if it is found to be patently not in accordance with the FCC's rules.

applicant proposes to meet those needs and problems.

3. To determine with respect to Pan American:

(a) The source and availability of additional funds over and above the $43,200 indicated; and

(b) Whether, in light the evidence adduced pursuant to (a) above, the applicant is financially qualified.

4. To determine whether there is a reasonable possibility that the tower height and location proposed by Pan American would constitute a hazard to air navigation.

5. To determine with respect to Jomay:

The source and availability of additional funds over and above the $55,993 indicated; and

(b) Whether in light of the evidence adduced pursuant to (a) above, the applicant is financially qualified.

6. To determine whether Jomay interviewed leaders of blacks, military, recreation and professions in connection with its ascertainment effort.

7. To determine whether Galaxy is financially qualified to construct and operate the proposed station.

8. To determine the efforts made by Galaxy to ascertain the community needs and problems of the area to be served and the means by which the applicant proposed to meet those needs and problems.

9. To determine which of the proposals would, on a comparative basis, best serve the public interest.

10. To determine, in the light of the evidence adduced pursuant to the foregoing issues, which of the applications, if any, should be granted.

15. It is further ordered, that the Federal Aviation Administration IS MADE A PARTY to the proceeding.

16. It if further ordered, that the petition to reject and/or dismiss filed by Jomay is granted to the extent indicated above and is denied in all other respects.

17. It is further ordered, that, to avail themselves of the opportunity to be heard, the applicants herein shall, pursuant to § 1.221(c) of the Commission's rules, in person or by attorney, within 20 days of the mailing of this Order, file with the Commission in triplicate a written appearance stating an intention to appear on the date fixed for the hearing and to present evidence on the issues specified in this Order.

18. It is further ordered, that the applicants herein shall, pursuant to Section 311(a)(2) of the Communications Act of 1934, as amended, and § 73.3594 of the Commission's rules, give notice of the hearing (either individually or, if feasible and consistent with the rules, jointly) within the time and in the manner prescribed in such rule, and shall advise the Commission of the publication of such notice as required by § 73.3594(g) of the Rules.

Federal Communications Commission.

Jerold L. Jacobs,

Chief, Broadcast Facilities Division Broadcast Bureau.

[FR Doc. 80-23589 Filed 8-5-80; 8:45 am]

BILLING CODE 6712-01-M

[BC DOCKET NO 80-333 File No. BPH-11,097; FCC 80-374]

Dick Lashbrook Corp. (WSIV-FM); Designating Applications for Consolidated Hearing on Stated Issues

Memorandum Opinion and Order

Adopted: June 25, 1980.

Released: July 28, 1980.

In re Application of DICK LASHBROOK CORPORATION (WSIV-FM) Pekin, Illinois, Has: 95.3 MHz, Channel 237 2.8 KW, 89 feet; Req: 95.3 MHz, Channel 237 1.1 KW, 461 feet, For Construction Permit for Modification of Facilities.

By the Commission: Commissioners Lee and Brown absent.

1. The Commission has before it for consideration: (i) the above-captioned application, (ii) a request by Dick Lashbrook Corporation (DLC) for a waiver of Section 73.207 of the Commission's Rules, (iii) petitions to deny the application of DLC filed by Virginia Broadcasting Corporation (VBC) and Kankakee TV Cable Co. (Kankakee); and (iv) related pleadings thereto.

2. DLC has applied to the Commission for a construction permit to change the transmitter location of Station WSIV-FM, Pekin, Illinois. The new site which is 62.6 miles from the transmitter site of co-channel Station WRKX (FM) in Ottawa, Illinois, would put DLC in violation of Section 73.207 of the Commission's Rules which requires that co-channel Class A FM stations be spaced at least 65 miles apart. The Commission has granted DLC a waiver of Section 73.207 for the purpose of accepting DLC's application only.[1] However, VBC, licensee of WRKX, has petitioned the Commission to deny the grant of DLC's application on the ground that it objects to being short-spaced with WSIV-FM. Kankakee, licensee of FM station WSWT, Peoria, Illinois also petitioned to deny the grant of DLC's application based upon short-spacing with WRKX.

[1] Under similar circumstances, the Commission has granted waivers for short-spacing of one or two miles.

3. The Commission's Rules define interference to FM stations solely on the basis of minimum assignment and station separation requirements, maximum power, and antenna height rules. Section 73.209(b). Since VBC has filed an objection to the application, it must be given an opportunity under Section 316(a) of the Communications Act of 1934, as amended, to show in hearing why its license should not be modified. *FCC* v. *National Broadcasting Company Inc., (KOA),* 319 U.S. 239 (1943).

4. Except as indicated by the issues specified below, the applicant is qualified to construct and operate as proposed. However, the Commission is unable to make the statutory finding that a grant of the above application would serve the public interest, convenience and necessity, and is of the opinion that the application must be designated for hearing.

5. It is ordered, That pursuant to Section 309(e) of the Communications Act of 1934, as amended, the application is designated for hearing, at a time and place to be specified in a subsequent Order, upon the following issues:

1. To determine the nature and extent of the applicant's violation of Section 73.207 of the Commission's Rules, and whether circumstances exist which warrant a waiver of that Rule.

2. To determine, in light of the evidence adduced pursuant to the foregoing issue, whether a grant of the application would serve the public interest, convenience, and necessity.

6. It is further ordered, That Virginia Broadcasting Corporation, licensee of WRKX, Ottawa, Illinois, and Kankakee TV Cable Co., licensee of WSWT, Peoria, Illinois ARE MADE PARTIES to the proceeding.

7. It is further ordered, That the petitions to deny filed by Virginia Broadcasting Corporation and Kankakee TV Cable Co., ARE GRANTED to the extent indicated above and ARE DENIED in all other respects.

8. It is further ordered, That the request by Dick Lashbrook Corporation for waiver of Section 73.207 of the Commission's Rules with respect to the short-spacing with WRKX is granted insofar as it requests acceptance for filing; and that insofar as it requests grant of the application is deferred pending outcome of this proceeding.

9. It is further ordered, That to avail themselves of the opportunity to be heard, the applicant and parties respondent herein, pursuant to § 1.221(c) of the Commission's Rules, in person or by attorney, shall within twenty (20) days of the mailing of this Order, file with the Commission in triplicate, a

written appearance stating an intention to appear on the date fixed for the hearing and present evidence on the issues specified in this Order.

10. It is further ordered, That the applicant herein shall pursuant to Section 311(a)(2) of the Communications Act of 1934, as amended, and Section 73.3594 of the Commission's Rules, give notice of the hearing within the time and in the manner prescribed in such Rule, and shall advise the Commission of the publication of such notice as required by § 73.3594(g) of the Rules.

Federal Communications Commission.

William J. Tricarico,

Secretary.

[FR Doc. 80-23597 Filed 8-5-80; 8:45 am]

BILLING CODE 6712-01-M

[BC Docket Nos. 80-423—80-424; File Nos. BPH-790209AC, 790920AB]

Jim T. Payne and Ritchey Communications Co.; Designating Applications for Consolidated Hearing on Stated Issues

Hearing Designation Order

Adopted: July 28, 1980.

Released: July 30, 1980.

In the matter of applications of Jim T. Payne, Yoakum, Texas, Req: 102.3 MHz, Channel 272 3.0 kW (H & V), 300 feet, BC Docket No. 80-423, File No. BPH-790209AC, Ritchey Communications Co., Yoakum, Texas, Req: 102.3 MHz, Channel 272 3.0 kW (H & V), 299.875 feet, BC Docket No. 80-424, File No. BPH-790920AB, for a construction permit for a new FM station.

1. The Commission, by the Chief, Broadcast Bureau, acting pursuant to delegated authority, has under consideration the above-captioned mutually exclusive applications of Jim T. Payne (Payne) and Ritchey Communications Co. (Ritchey) for a construction permit for a new FM station.

2. *Ritchey.* Analysis of the financial data submitted by Ritchey reveals that $41,050 will be required to construct the proposed station and operate for three months, itemized as follows:

Equipment down payment	$2,600
Principal and interest payments on equipment (4 months)	5,200
Buildings	1,000
Miscellaneous	26,000
Operating expenses (3 months)	6,250
Total	41,050

The applicant plans to finance its proposal with existing cash of $32,000 and profits from its existing AM station, KRJH, of which we can give credit for $6,410. Because Ritchey indicates only $38,410 available to meet a requirement of $41,050, a limited financial issue will be specified.

3. Except as indicated by the issue specified below, the applicants are qualified to construct and operate as proposed. However, since the proposals are mutually exclusive, they must be designated for hearing in a consolidated proceeding on the issues specified below.

4. Accordingly, it is ordered, that, pursuant to Section 309(e) of the Communications Act of 1934, as amended, the applications are designated for hearing in a consolidated proceeding, at a time and place to be specified in a subsequent Order, upon the following issues:

1. To determine with respect to Ritchey Communications Co.:

a. The source and availability of additional funds over and above the $38,410 indicated; and

b. In light of the evidence adduced pursuant to (a) above, whether the applicant is financially qualified to construct and operate the proposed station.

2. To determine which of the proposals would, on a comparative basis, better serve the public interest.

3. To determine, in the light of the evidence adduced pursuant to the foregoing issues, which of the applications should be granted.

5. It is further ordered, that, to avail themselves of the opportunity to be heard, the applicants herein shall, pursuant to § 1.221(c) of the Commission's rules, in person or by attorney, within 20 days of the mailing of this Order, file with the Commission in triplicate a written appearance stating an intention to appear on the date fixed for the hearing and to present evidence on the issues specified in this Order.

6. It is further ordered, that the applicants herein shall, pursuant to § 311(a)(2) of the Communications Act of 1934, as amended, and § 73.3594 of the Commission's rules, give notice of the hearing (either individually or, if feasible and consistent with the rules, jointly) within the time and in the manner prescribed in such rule, and shall advise the Commission of the publication of such notice as required by § 73.3594(g) of the rules.

Federal Communications Commission.

Jerold L. Jacobs,

Chief, Broadcast Facilities Division.

[FR Doc. 80-23598 Filed 8-5-80; 8:45]

BILLING CODE 6712-01-M

[BC Docket Nos. 80-364-80-365; File Nos. BP-21,113, BP-781205AJ]

Rockbridge Communications, Inc., and Erwin S. Solomon; Designation Applications for Consolidated Hearing on Stated Issues

Hearing Designation Order

Adopted: June 25, 1980.

Released: July 30, 1980.

In re applications of Rockbridge Communications, Inc., Buena Vista, Virginia, Req: 1270 kHz, 1 kW, Day, BC Docket No. 80-364, File No. BP-21,113; Erwin S. Solomon, Hot Springs, Virginia, Req: 1270 kHz, 1 kW, Day, BC Docket No. 80-365, File No. BP-781205AJ, for construction permit.

1. The Commission, by the Chief, Broadcast Bureau, acting pursuant to delegated authority, has under consideration the above-captioned mutually exclusive applications for new AM broadcast stations.

2. *Rockbridge Communications, Inc.* There is a discrepancy between the four corporate directors listed in Table I of Section II of the application form, and the three directors authorized in Article II of the corporation's by-laws. This discrepancy must be resolved by amendment.

3. Rockbridge has failed to comply with the requirements of the *Primer on Ascertainment of Community Problems by Broadcast Applicants,* 27 FCC 2d 650 (1971). Its compositional study of Buena Vista says little about governmental activities, and does not list local public service organizations. Further, it is not clear whether the representatives of local cultural groups it interviewed are in fact leaders of those groups. Therefore, a limited ascertainment issue will be specified.

4. *Erwin S. Solomon.* Applicants for new broadcast stations are required by § 73.3580 of the Commission's rules to give local notice of the filing of their applicaitons. They must then file with the Commission the statement described in § 73.3580(h) of the rules. We have no evidence that Erwin Solomon published the required notice. To remedy this deficiency, the applicant will be required to demonstrate his compliance with the rule.

5. Analysis of the financial portion of Erwin Solomon's applicaiton indicates that he will require $67,175 to construct the proposed facility and operate for three months, itemized as follows:

Equipment	$25,000
Building	10,000
Legal costs	3,000
Other construction costs	9,000
Operating costs	20,175
Total	$67,175

Mr. Solomon has shown bank loans totaling $100,000 (gross) available to finance construction and operation. Allowing for loan repayments through the first three months of operation, there is a cushion over the estimated costs. However, the accuracy of the cost estimates is subject to doubt. While Instruction 1(b) of Section III of the application form requires applicants to state the basis for their estimates, this applicant only says that his "are based on figures supplied * * * by persons knowledgeable in the field of broadcasting." No allowance appears to have been made for acquiring a transmitter, or monitoring and test equipment; and the amount estimated for legal fees appears insufficient to cover the costs of a comparative hearing. In addition, there is no itemization of operating costs, as also required by Instruction 1(b). Therefore, a limited financial issue will be specified.

6. Erwin Solomon has also failed to comply with the requirements of the ascertainment *Primer*. First, his compositional study does not contain any information about Hot Springs. It notes that Census data is not available for the community, so provides only county-wide population, racial, and economic information. There is no discussion of governmental activities or public service organizations. We are therefore unable to determine what groups are significant in Hot Springs. Second, because purported community leaders are not fully identified, it appears that only a few groups were represented in the leader interviews, and it is not clear whether leaders of outlaying communities to be served were adequately contacted. Third, the description of the general public survey does not establish how many Hot Springs residents were interviewed, so we cannot determine whether a random sample was in fact achieved. Fourth, the dates of the interviews have not been stated, so we cannot determine they were timely. Because of these serious defects, a general ascertainment issue will be specified.

7. Finally, Mr. Solomon has not supplied the photographs of his proposed sited called for by Instruction 11 of Section V-A of the application form, so we cannot determine whether the site is suitable for the proposed antenna. An appropriate issue will be specified.

8. *Other matters.* The respective proposals, although for different communities, would serve substantial areas in common. Consequently, in addition to determining pursuant to Section 307(b) of the Communications Act of 1934, as amended, which of the proposals would better provide a fair, efficient, and equitable distribution of radio service, a contingent comparative issue will also be specified.

9. Except as indicated by the issues specified below, both applicants are qualified to construct and operate as proposed. However, since the proposals are mutually exclusive, they must be designated for hearing in a consolidated proceeding.

10. Accordingly, it is ordered, that pursuant to Section 309(e) of the Communications Act of 1934, as amended, the applications are designated for hearing in a consolidated proceeding, at a time and place to be specified in a subsequent Order, upon the following issues:

1. To determine with respect to the efforts of Rockbridge Communications, Inc. to ascertain the needs of its proposed service area:

a. Whether the applicant determined the governmental activities and public service organizations in Buena Vista, and

b. Whether the applicant interviewed leaders of Buena Vista cultural groups.

2. To determine with respect to Erwin S. Solomon:

a. Whether the applicant has accurately estimated the costs of constructing and operating the proposed station for three months, including legal costs incident to a comparative hearing, and

b. Whether in light of the evidence adduced pursuant to (a) above, the applicant is financially qualified.

3. To determine the efforts mady by Erwin S. Solomon to ascertain the community needs and problems of the area to be served, and the means by which the applicant proposes to meet those needs and problems.

4. To determine whether the transmitter site proposed by Erwin S. Solomon is satisfactory, with particular regard to possible conditions in the vicinity of the antenna system which would distort the proposed non-directional radiation pattern.

5. To determine the areas and populations which would receive primary aural service from each proposal, and the availability of other primary service to such areas and populations.

6. To determine, in the light of Section 307(b) of the Communications Act of 1934, as amended, which of the proposals would better provide a fair, efficient, and equitable distribution of radio service.

7. To determine, in the event it is concluded that a choice between the applications should not be based solely on considerations relating to Section 307(b), which of the proposals would, on a comparative basis, better serve the public interest.

8. To determine in light of the evidence adduced pursuant to the foregoing issues, which of the applications, if either, should be granted.

11. It is further ordered, that Rockbridge Communications, Inc. shall file the amendment specified in paragraph 2, above, within 30 days after this Order is published in the Federal Register.

12. It is further ordered, that Erwin S. Solomon shall publish local notice of his application (if he has not already done do) and shall file a statement of publication with the presiding Administrative Law Judge within 40 days after this Order is published in the Federal Register.

13. It is further ordered, that to avail themselves of the opportunity to be heard, the applicants herein shall, pursuant to § 1.221(c) of the Commission's rules, in person or by attorney, file with the Commission in triplicate a written appearance stating an intention to appear on the date fixed for the hearing and to present evidence on the issues specified in this order.

14. It is further ordered, that the applicants herein shall, pursuant to Section 311(a)(2) of the Communications Act of 1934, as amended, and § 73.3594 of the Commission's rules, give notice of the hearing within the time and in the manner prescribed in such rule, and shall advise the Commission of the publication of such notice as required by § 73.3594(g) of the rules.

Federal Communications Commission.

Jerold L. Jacobs,

Chief, Broadcast Facilities Division.

[FR Doc. 80-23592 Filed 8-5-80; 8:45 am]

BILLING CODE 6712-01-M

[BC Docket Nos. 80-360—80-361; File Nos. BPCT-790615KG, BPCT-791026KJ]

Southwest Television, Ltd.; Designating Applications for Consolidated Hearing on Stated Issues

Hearing Designation Order

Adopted: June 20, 1980.

Released: July 28, 1980.

In re applications of Southwest Television, Ltd. (Eugene D. Adelstein and Edward B. Berger, General Partners), Spokane, Washington, Req: Ch. 22, New Commercial, BC Docket No. 80-360, File No. BPCT-790615KG;

Frontier Media, Inc., Spokane, Washington, Req: Ch. 22 New Commercial, BC Docket No. 80-361, File No. BPCT-791026KJ, for construction permit.

Hearing Designation Order

1. The Commission, by the Chief, Broadcast Bureau, acting pursuant to delegated authority, has under consideration the above-captioned mutually exclusive applications.

2. Except as indicated by the issues specified below, the Commission finds Southwest Television, Ltd. and Frontier Media, Inc. legally, financially, technically and otherwise qualified. Since these applications are mutually exclusive, the Commission is unable to make the statutory finding that grant of the applications will serve the public interest, convenience and necessity. The applications must, therefore, be designated for hearing in a consolidated proceeding on the issues set out below. [1]

3. Accordingly, it is ordered, that, pursuant to Section 309(e) of the Communications Act of 1934, as amended, the above-captioned applications are designated for hearing in a consolidated proceeding, to be held before an Administrative Law Judge at a time and place to be specified in a subsequent Order, upon the following issues:

(a) To determine which of the applications would better serve the public interest.

(b) To determine, in light of the evidence adduced pursuant to the foregoing issue, which of the applications should be granted.

4. It is further ordered, that any grant to either applicant shall be conditioned upon Canada's consent regarding the applicant's authority to operate with maximum effective radiated power in excess of 1,000 kW.

5. It is further ordered, that, to avail themselves of the opportunity to be heard, the applicants herein, pursuant to § 1.221(c) of the Commission's rules, in person or by attorney, within twenty (20) days of the mailing of this Order, shall file with the Commission, in triplicate, a written appearance stating an intention to appear on the date fixed for hearing and to present evidence on the issues specified in this Order.

6. It is further ordered, that the applicants herein shall, pursuant to Section 311(a)(2) of the Communications Act of 1934, as amended, and § 73.3594 of the Commission's rules, give notice of the hearing within the time and in the manner prescribed in such rule, and shall advise the Commission of the publication of such notice as required by § 73.3594(g) of the rules.

Federal Communications Commission.

Jerold L. Jacobs,

Chief, Broadcast Facilities Division.

[FR Doc. 80-23586 Filed 8-5-80; 8:45 am]

BILLING CODE 6712-01-M

[1] Southwest Television, Ltd. (Southwest) is awaiting FAA clearance for its antenna proposal. If, during the hearing, the FAA advises that this proposal constitutes an air hazard, the Administrative Law Judge is authorized to specify an air hazard issue with respect to Southwest. In the unlikely event that the FAA study is not completed by the end of the hearing process, and should it be determined that Southwest's application would better serve the public interest, the construction permit shall be conditioned to require FAA approval prior to construction.

[BC Docket Nos. 80-409—80-410; File Nos. BPH-781020AE, BPH-790530AF]

Valcom, Inc., and Fox Valley Broadcasting Corp.; Designating Applications for Consolidated Hearing on Stated Issues

Hearing Designation Order

Adopted: July 7, 1980.

Released: July 29, 1980.

In re applications of Valcom, Inc., Fort Valley, Georgia, Req: 106.3 MHz, Channel 292, 3 kW (H&V), 297 feet, BC Docket No. 80-409, File No. BPH-781020AE; Fox Valley Broadcasting Corporation, Fort Valley, Georgia, Req: 106.3 Mhz, Channel 292, 1.59 kW (H&V), 415 feet, BC Docket No. 80-410, File No. BPH-790530AF; for construction permits for a new FM station.

1. The Commission, by the Chief, Broadcast Bureau, acting pursuant to delegated authority, has under consideration the above captioned mutually exclusive applications.

2. *Valcom Inc.* In response to Question 14 of FCC Form 301 Valcom proposes 5 hours and 6 minutes (4.1 percent) news; 2 hours and 52 minutes (2 percent) public affairs; and 2 hours and 52 minutes (2 percent) other programming (exclusive of entertainment and sports) as being responsive to community problems. However, the total amount of public affairs programming listed by Valcom in its ascertainment survey, if regularly scheduled each week, is 1 hour and 25 minutes, or 1.1 percent. Yet, most of Valcom's programs will not be aired each week. In Valcom's Exhibit 8 the proposed programs, "Valley Forum" and "Tell Us Why," are limited series of fourteen parts and four parts respectively; "In the Public Interest" is a proposed five minute public affairs program, not scheduled on a regular basis; "Labor Speaks" is only a three part series; and "Campus Week In Review" will only be broadcast during the eight month school year. "Know Your Rights," and "Washington Reports" are the only programs regularly scheduled on a weekly basis. Considering both the limited series and the regularly scheduled programs over the full three year term of the license, Valcom is proposing to allocate only 0.4 percent of its time to public affairs programming. A question arises as to whether Valcom has proposed sufficient programming to meet the perceived needs and problems of Fort Valley, Georgia. A limited ascertainment issue will be specified.

3. Since no determination has been reached that the antenna proposed by Valcom would not constitute a menace to air navigation, an issue regarding this matter is required.

4. Data submitted by the applicants indicates that there would be a significant difference in the size of the areas and populations which would receive service from the proposals. Consequently, for the purpose of comparison, the areas and population which would receive FM service of 1 mV/m or greater intensity, together with the availability of other primary aural services in such areas, will be considered under the standard comparative issue, for the purpose of determining whether a comparative preference should accrue to either of the applicants.

5. Except as indicated by the issues specified below, the applicants are qualified to construct and operate as proposed. However, since the proposals are mutually exclusive, they must be designated for hearing in a consolidated proceeding.

6. Accordingly, it is ordered, that, pursuant to Section 309(e) of the Communications Act of 1934, as amended, the applications are designated for hearing in a consolidated proceeding, at a time and place to be specified in a subsequent Order, upon the following issues:

1. To determine with respect to the efforts of Valcom to ascertain the needs of its proposed service area:

a. Whether Valcom has proposed sufficient programming to meet the perceived needs and problems of Fort Valley, Georgia.

2. To determine whether there is a reasonable possibility that the tower height and location proposed by Valcom, Inc. would constitute a hazard to air navigation.

3. To determine which of the proposals would, on a comparative basis, better serve the public interest.

4. To determine, in the light of the evidence adduced pursuant to the foregoing issues, which of the applications should be granted.

7. It is further ordered, that, the Federal Aviation Administration is made a party to the proceeding.

8. It is further ordered, that, to avail themselves of the opportunity to be heard, the applicants herein shall, pursuant to § 1.221(c) of the Commission's rules, in person or by attorney, within 20 days of the mailing of this Order, file with the Commission in triplicate a written appearance stating an intention to appear on the date fixed for the hearing and to present evidence on the issues specified in this Order.

9. It is further ordered, That the applicants herein shall, pursuant to Section 311(a)(2) of the Communications Act of 1934, as amended, and § 73.3594 of the Commission's rules, give notice of the hearing (either individually or, if feasible and consistent with the rules, jointly) within the time and in the manner prescribed in such rule, and shall advise the Commission of the publication of such notice as required by § 73.3594(g) of the rules.

Federal Communications Commission.

Jerold L. Jacobs,

Chief, Broadcast Facilities Division, Broadcast Bureau.

[FR Doc. 80-23587 Filed 8-5-80; 8:45 am]

BILLING CODE 6712-01-M

[BC Docket Nos. 80-362—80-363; File Nos. BPH-11110, BPH-780908AB]

Van Buren Community Service Broadcasters, Inc. and Crawford County Communications, Inc.; Designating Applications for Consolidated Hearing on Stated Issues.

Hearing Designation Order

Adopted: June 20, 1980.

Released: July 28, 1980.

In re applications of Van Buren Community Service Broadcasters, Inc., Van Buren, Arkansas, Req: 102.3 MHz, Channel 272, 3 kW (H&V), 300 feet, BC Docket No. 80-362, File No. BPH-11110; Crawford County Communications, Inc., Van Buren, Arkansas, Req: 102.3 MHz, Channel 272, 3kW (H&V), 300 feet, BC Docket No. 80-363, File No. BPH-780908AB. For a construction permit for a new FM station.

1. The Commission, by the Chief, Broadcast Bureau, acting pursuant to delegated authority, has under consideration the above-captioned mutually exclusive applications of Van Buren Community Service Broadcasters, Inc. (Van Buren) and Crawford County Communications, Inc. (Crawford) a motion to specify issues filed by Crawford, and related pleadings.[1]

2. The applicants are qualified to construct and operate as proposed. However, since the proposals are mutually exclusive, they must be designated for hearing in a consolidated proceeding on the issues below.

3. Accordingly, it is ordered, that, pursuant to Section 309(e) of the Communications Act of 1934, as amended, the applications are designated for hearing in a consolidated proceeding, at a time and place to be specified in a subsequent Order, upon the following issues:

1. To determine which of the proposals would, on a comparative basis, better serve the public interest.

2. To determine, in light of the evidence adduced to the foregoing issue, which of the applications, if either, should be granted.

4. It is further ordered, That, in the event of a grant of the application of Van Buren Community Service Broadcasting, Inc., the construction permit shall contain the following condition:

Prior to construction of the FM tower authorized herein, permittee shall notify AM station KFDF so that that station may determine operating power by the indirect method. Permittee shall be responsible for the installation and continued maintenance of detuning apparatus necessary to prevent adverse effects upon the radiation pattern of the aforementioned AM station. Subsequent to construction of the FM tower and installation of all appurtenances thereon, antenna impedance measurements of the AM antenna shall be made and sufficient field strength measurements, obtained at least 10 locations along each of eight equally spaced radials, shall be made to establish that the AM radiation pattern is essentially omnidirectional and, before FM program tests are authorized, the results submitted to the Commission in an application for the AM station to return to the direct method of power determination.

5. It is further ordered, that, to avail themselves of the opportunity to be heard, the applicants herein shall, pursuant to § 1.221(c) of the Commission's rules, in person or by attorney, within 20 days of the mailing of this Order, file with the Commission in triplicate a written appearance stating an intention to appear on the date fixed for the hearing and to present evidence on the issues specified in this Order.

6. It is further ordered, that the applicants herein shall, pursuant to Section 311(a)(2) of the Communications Act of 1934, as amended, and § 73.3594(g) of the Commission's rules, give notice of the hearing (either individually or, if feasible and consistent with the Rules, jointly) within the time and in the manner prescribed in such rule, and shall advise the Commission of the publication of such notice as required by § 73.3594(g) of the rules.

Federal Communications Commission.

Jerold L. Jacobs,

Chief, Broadcast Facilities Division.

[FR Doc. 80-23585 Filed 8-5-80; 8:45 am]

BILLING CODE 6712-01-M

[1] Pursuant to the Commission's *Report and Order* in re *Revised Procedures for the Processing of Contested Broadcast Applications; Amendments of Part 1 of the Commission's Rules*, 72 FCC 2d 202, 45 RR 2d 1220 (1979), which directed the deletion of all issue pleadings in pending cases, the matters sought to be raised by Crawford in its pleadings have not been considered in this order. Accordingly, an opportunity to raise any allegations contained in the motion which have not been discussed herein will be afforded the parties post designation, pursuant to § 1.229.

[BC Docket Nos. 80-349—80-351; File Nos. BPH-781113AO etc.]

Visionary Radio Euphonics Inc., et al. Designating Applications for Consolidated Hearing on Stated Issues

Hearing Designation Order

Adopted: June 25, 1980.

Released: July 28, 1980.

In re applications of Visionary Radio Euphonics, Inc., Cottage Grove, Oregon. Req: 95.3 MHz, Channel 237, 0.12 kW (H&V), 1480 feet, BC Docket No. 80-349, File No. BPH-781113AO; Creswell Wireless Co., Inc., Creswell, Oregon, Req: 95.3 MHz Channel 237, 0.20 kW (H&V), 1160 feet, BC Docket No. 80-350 File No. BPH-790328AA; Bear Mountain Radio, Inc., Cottage Grove, Oregon, Req: 95.3 MHz, Channel 237, 0.0891 kW (H&V), 1477 feet, BC Docket No. 80-351, Filed No. BPH-790328AP; for construction permit for a new FM station.

1. The Commission, by the Chief, Broadcast Bureau, acting pursuant to delegated authority, has under consideration the above-captioned mutually exclusive applications filed by Visionary Radio Euphonics, Inc. (Visionary), Creswell Wireless Co., Inc. (Creswell) and Bear Mountain Radio, Inc. (Bear Mountain).

2. *Bear Mountain.* Applicants for new broadcast stations are required by § 73.3580(f) of the Commission's rules to give local notice of the filing of their applications. They must then file with the Commission the statement described in § 73.3580(h) of the rules. We have no evidence that Bear Mountain published the required notice. To remedy this

deficiency, Bear Mointain will be required to publish local notice of its application and to file a statement of publication with the presiding Administrative Law Judge.

3. The respective proposals, although for different communities, would serve substantial areas in common. Consequently, in addition to determining, pursuant to Section 307(b) of the Communications Act of 1934, as amended, which of the proposals would best provide a fair, efficient and equitable distribution of radio service, a contingent comparative issue will also be specified.

4. Except as indicated by the issues specified below the applicants are qualified to construct and operate as proposed. However, since the proposals are mutually exclusive, they must be designated for hearing in a consolidated proceeding on the issues specified below.

5. Accordingly, it is ordered, that, pursuant to Section 309(e) of the Communications Act of 1934, as amended, the applications are designated for hearing in a consolidated proceeding, at a time and place to be specified in a subsequent Order, upon the following issues:

1. To determne the areas and populations which would receive primary aural service (1 mV/m or greater in the case of FM) from the proposals and the availability of other primary service to such areas and populations.

2. To determine, in the light of Section 307(b) of the Communications Act of 1934, as amended, which of the proposals would best provide a fair, efficient and equitable distribution of radio service.

3. To determine, in the event it is concluded that a choice between the applications should not be based solely on considerations relating to Section 307(b), which of the proposals would, on a comparative basis, best serve the public interest.

4. To determine, in the light of the evidence adduced pursuant to the foregoing issues, which of the applications, if any, should be granted.

6. It is further ordered, that Bear Mountain Radio, Inc. shall file a statement with the presiding Administrative Law Judge showing compliance with the public notice requirements of § 73.3580(f) of the Commission's rules.

7. It is further ordered, that, to avail themselves of the opportunity to be heard, the applicants herein shall, pursuant to § 1.221(c) of the Commission's Rules, in person or by attorney, within 20 days of the mailing of this Order, file with the Commission in triplicate a written appearance stating an intention to appear on the date fixed for the hearing and to present evidence on the issues specified in this Order.

8. It is further ordered, that the applicants herein shall, pursuant to Section 311(a)(2) of the Communications Act of 1934, as amended, and § 73.3594(g) of the Commission's rules, give notice of the hearing (either individually or, if feasible and consistent with the Rules, jointly) within the time and in the manner prescribed in such Rule, and shall advise the Commission of the publication of such notice as required by § 73.3594(g) of the rules.

Federal Communications Commission.

Jerold L. Jacobs,

Chief, broadcast Facilities Division, Broadcast Bureau.

[FR Doc. 80-23594 Filed 8-5-80; 8:45 am]

BILLING CODE 6712-01-M

Radio Technical Commission for Marine Services; Meetings

In accordance with Pub. L. 92-463, "Federal Advisory Committee Act," the schedule of future Radio Technical Commission for Marine Services (RTCM) meetings is as follows:

Executive Committee Meeting, Notice of August Meeting, Thursday, August 21, 1980—9:30 a.m., Conference Room 8240, Nassif (DOT) Building, 400 Seventh Street, S.W. at D Street, Washington, D.C.

Agenda

1. Administrative matters and committee reports.

2. Discussion concerning RTCM practices and procedures.

3. Consideration/discussion of petition received by National Ocean Industries Association to modify RTCM By-Laws.

The RTCM has acted as a coordinator for maritime telecommunications since its establishment in 1947. All RTCM meetings are open to the public. Written statements are preferred, but by previous arrangement, oral presentations will be permitted within time and space limitations.

Those desiring additional information concerning the above meeting(s) may contact either the designated chairman or the RTCM Secretariat (phone: (202) 632-6490).

Federal Communications Commission.

William J. Tricarico,

Secretary.

[FR Doc. 80-23596 Filed 8-5-80; 8:45 am]

BILLING CODE 6712-01-M

COMMISSION OF FINE ARTS

Meeting

The Commission of Fine Arts will next meet in open session on Wednesday, September 3, 1980, at 10:00 a.m. in the Commission's offices at 708 Jackson Place, NW, Washington, D.C. 20006 to discuss various projects affecting the appearance of Washington, D.C.

Inquiries regarding the agenda and requests to submit written or oral statement should be addressed to Mr. Charles H. Atherton, Secretary, Commission of Fine Arts, at the above address.

Dated In Washington, D.C. July 31, 1980.

Charles H. Atherton,

Secretary.

[FR Doc. 80-23678 Filed 8-5-80; 8:45 am]

BILLING CODE 6330-01-M

FEDERAL MARITIME COMMISSION

[Docket No. 80-51]

Missouri Pacific Railroad Co. v. Gulf European Freight Association, et al.; Filing of Complaint and Assignment

Notice is given that a complaint filed by Missouri Pacific Railroad Co. against Gulf European Freight Association; Lykes Brothers Steamship Co., Inc.; Barber Steamship Lines, Inc., as Agent for Gulf Europe Express; Biehl & Company, Inc., as Agent for Hapag Lloyd; Sea-Land Service, Inc.; United States Lines, Inc.; and Seatrain Lines, Inc. was served August 1, 1980. The complaint alleges that respondents' imposition of a surcharge for transportation of containers or trailers having a prior movement on various specifically named railroads results in violation of sections 15, 16 First, 17 and 18(a) of the Shipping Act, 1916.

This proceeding has been assigned to Administrative Law Judge William Beasley Harris. Hearing in this matter, if any is held, shall commence within the time limitations prescribed in 46 CFR 502.61. The hearing shall include oral testimony and cross-examination in the discretion of the presiding officer only upon a proper showing that there are genuine issues of material fact that cannot be resolved on the basis of sworn statements, affidavits, depositions, or other documents or that the nature of the matter in issue is such that an oral hearing and cross-

examination are necessary for the development of an adequate record.

Francis C. Hurley,

Secretary.

[FR Doc. 80-23625 Filed 8-5-80; 8:45 am]

BILLING CODE 6730-01-M

[Fact Finding Investigation No. 9]

Possible Rebates and Similar Malpractices in the United States Foreign Commerce; Extension of Investigation

By Order of August 6, 1979, the Federal Maritime Commission extended for a term of one year Fact Finding Investigation No. 9. This nonadjudicatory proceeding was instituted by Order of the Commission on July 9, 1976 (Federal Register, Vol. 41, No. 141, July 21, 1976), into the practices of rebates, absorptions, allowances in excess of those set forth in the tariff, and any other method of obtaining or allowing other persons to obtain transportation of property at less than the rates or charges which would otherwise be applicable in the United States foreign commerce.

Since its institution, Fact Finding Investigation No. 9 has been utilized as an integral part of the Commission's program into rebates and other malpractices in the foreign commerce of the United States. The Commission's continuing investigation into these matters raises the possibility that the compulsory processes authorized by Fact Finding Investigation No. 9 may have to be utilized to fully develop cases still pending final resolution.

In view of the above, the Commission has determined to extend the term of Fact Finding Investigation No. 9 for an additional two years. Further, that John Robert Ewers is designated Investigative Officer replacing James K. Cooper.

Therefore, it is ordered, that pursuant to sections 22 and 27 of the Shipping Act, 1916 (46 U.S.C. 821 and 826) and section 214(a) of the Merchant Marine Act of 1936 [46 U.S.C. 1124(a)], Fact Finding Investigation No. 9 is extended for two years after publication of this Order in the Federal Register.

It is further ordered, that John Robert Ewers is designated Investigative Officer replacing James K. Cooper.

It is further ordered, that Notice of this Order be published in the Federal Register.

By the Commission.

Francis C. Hurney,

Secretary.

[FR Doc. 80-23684 Filed 8-5-80; 8:45 am]

BILLING CODE 6730-01-M

[Docket No. 80-49]

Bultaco International, Ltd. and John Grace; Possible Violations of Allowable Rates and Charges; Order of Investigation and Hearing

Based on information developed by the Commission's Bureau of Enforcement, it appears that Bultaco International, Ltd. and John Grace may have obtained or attempted to obtain transportation by water for property at less than the rates or charges which would otherwise be applicable by unjust or unfair device or means.

The Commission's General Counsel asserted a claim for civil penalties against Bultaco and John Grace, President of Bultaco, jointly and severally, for receiving rebates from common carriers by water in connection with the importation of motorcycles from Spain for the period beginning on or before September 20, 1973 and continuing through June 10, 1976. However, as of this date the claim has not been settled.

Accordingly, the Commission believes an investigation and hearing is necessary in order to determine whether Bultaco International, Ltd. and John Grace have violated section 16, initial paragraph, Shipping Act, 1916, and, if so, whether penalties should be assessed for such violations.

Now, therefore, it is ordered, that pursuant to section 16, initial and penultimate paragraphs (46 U.S.C. 815, initial and penultimate paragraphs), and section 22 (46 U.S.C. 821) of the Shipping Act, 1916, this proceeding is hereby instituted to determine: (1) Whether or not Respondents violated section 16, initial paragraph, by obtaining or attempting to obtain transportation by water for property at less than the rates and charges which would otherwise be applicable by any unjust or unfair device or means; and (2) Whether penalties should be assessed against Respondents if found to have violated section 16, initial paragraph, and, if so, the amount of such penalties;

It is further ordered, that Bultaco International, Ltd. and John Grace, 3509 Virginia Beach Blvd., Virginia Beach, Virginia 23462, are hereby made Respondents in this proceeding and that the matter be assigned for public hearing before an Administrative Law Judge at a date and place to be determined by the Administrative Law Judge presiding in accordance with Rule 61 of the Commission's Rules of Practice and Procedure (46 CFR 502.61);

It is further ordered, that in accordance with Rule 42 of the Commission's Rules of Practice and Procedure (46 CFR 502.42), the Commission's Bureau of Hearing Counsel shall be a party to this proceeding.

It is further ordered, that any person other than Respondents and Hearing Counsel having an interest and desiring to participate in this proceeding shall file a petition for leave to intervene in accordance with Rule 72 of the Commission's Rules of Practice and Procedure (46 CFR 502.72); and

It is further ordered, that notice of this Order be published in the Federal Register, and a copy be served upon all parties of record.

By the Commission.

Francis C. Hurney,

Secretary.

[FR Doc. 80-23626 Filed 8-5-80; 8:45 am]

BILLING CODE 6730-01-M

[Docket No. 80-50]

Certified Corp., Seaway Distribution Corp.; Possible Violation of Allowable Rates; Order of Investigation and Hearing

Seaway Distribution Corporation is a non-vessel operating common carrier (NVOCC) in the trade to Hawaii from the U.S. West Coast. Certified Corporation, a wholesale distributor of grocery products in Hawaii, wholly owns Seaway. Certified ships its goods to Hawaii either by having the seller deliver directly to a vessel operating common carrier (VOCC) or by using Seaway as its agent to consolidate various goods and tender them to the VOCC in the name of Certified. At times Seaway will move the goods in its capacity as an NVOCC.

An investigation conducted by the Commission's Bureau of Enforcement indicates that between December 1, 1974 and August 5, 1975 Seaway, acting as a shipper, tendered VOCCs a total of 65 shipments destined to itself in Hawaii, the contents and/or weight or cube of which appear to have been knowingly misdeclared in order to obtain transportation at less than the applicable rate. The statute of limitations has run on 61 of these shipments; the remaining four shipments are listed in the Appendix.

Between March 4, 1975 and July 15, 1975 Seaway, as an agent for Certified, tendered five shipments to Matson Navigation Company for ocean carriage to Hawaii. Again, these shipments appear to have been misdeclared as to the nature of the commodity and/or its weight or cube. However, the statute of limitations has run on all shipments.

The shipments listed in the Appendix will be made the subject of an investigation to determine whether or not Certified or Seaway or both have violated section 16, Initial Paragraph, of the Shipping Act, 1916, and, if so, whether penalties should be assessed for such violations in accordance with Pub. L. 96-25 (93 Stat. 71).

Now therefore, it is ordered, that pursuant to section 16, Initial Paragraph (46 U.S.C. 815), and section 22 (46 U.S.C. 821) of the Shipping Act, 1916, this proceeding is hereby instituted to determine: (1) Whether or not Seaway Distribution Corporation and/or Certified Corporation violated section 16, Initial Paragraph, by knowingly and willfully misdeclaring the contents and/or the weight or cube of the shipments listed in the Appendix in order to obtain transporation at less than the applicable rate; and (2) whether penalties should be assessed against Respondents if they are found to have violated section 16, Initial Paragraph, and if so, the amount of such penalties;

It is further ordered, that Seaway Distribution Corporation and Certified Corporation are hereby made Respondents in this proceeding;

It is further ordered, that, in accordance with Rule 42 of the Commission's Rules of Practice and Procedure (46 CFR 502.42), the Commission's Bureau of Hearing Counsel is a party to this proceeding;

It is further ordered, That a public hearing be held in this proceeding and that the matter be assigned for hearing and decision by an Administrative Law Judge of the Commission's Office of Administrative Law Judges at a date and place to be hereafter determined by the Presiding Administrative Law Judge, but in no event later than the time limitation set forth in Rule 61 of the Commission's Rules of Practice and Procedure (46 CFR 502.61);

The hearing shall include oral testimony and cross-examination in the discretion of the Presiding Officer only upon a proper showing that there are genuine issues of material fact that cannot be resolved on the basis of sworn statements, affidavits, depositions, or other documents or that the nature of the matters in issue is such that an oral hearing and cross-examination are necessary for the development of an adequate record;

It is further ordered, That notice of this Order be published in the Federal Register, and a copy be served upon all parties of record;

It is further ordered, That any person other than parties of record having an interest and desiring to participate in this proceeding shall file a petition for leave to intervene in accordance with Rule 72 of the Commission's Rules of Practice and Procedure (46 CFR 502.72);

It is further ordered, That all future notices, orders, and/or decisions issued by or on behalf of the Commission in this proceeding, including notice of the time and place of hearing or prehearing conference, shall be mailed directly to all parties of record;

It is further ordered, That, except as provided in Rules 159 and 201(a) of the Commission's Rules of Practice and Procedure, (46 CFR 502.159, 46 CFR 502.201(a)), all documents submitted by any party of record in this proceeding shall be filed in accordance with Rule 118 of the Commission's Rules of Practice and Procedure (46 CFR 502.118), as well as being mailed directly to all parties of record.

By the Commission.

Francis C. Hurney,

Secretary.

Appendix

B/L Number and Date

615429—8/4/75
615423—8/4/75
519426—8/2/75
519427—8/2/75

[FR Doc. 80-23684 Filed 8-5-80; 8:45 am]

BILLING CODE 6730-01-M

GENERAL ACCOUNTING OFFICE

Regulatory Reports Review; Receipt of Report Proposal

The following request for clearance of a report intended for use in collecting information from the public was received by the Regulatory Reports Review Staff, GAO, on July 28, 1980. See 44 U.S.C. 3512 (c) and (d). The purpose of publishing this notice in the Federal Register is to inform the public of such receipt.

The notice includes the title of the request received; the name of the agency sponsoring the proposed collection of information; the agency form number, if applicable; and the frequency with which the information is proposed to be collected.

Written comments on the proposed NRC request are invited from all interested persons, organizations, public interest groups, and affected businesses. Because of the limited amount of time GAO has to review the proposed request, comments (in triplicate) must be received on or before August 25, 1980, and should be addressed to Mr. John M. Lovelady, Senior Group Director, Regulatory Reports Review, United States General Accounting Office, Room 5106, 441 G Street, NW, Washington, DC 20548.

Further information may be obtained from Patsy J. Stuart of the Regulatory Reports Review Staff, 202-275-3532.

Nuclear Regulatory Commission

The NRC requests an extension-without-change clearance of the Class Exemption for Reports Concerning Possible Generic Problems. As a part of its regulatory function the NRC conducts an inspection and enforcement program to ensure adequate protection of the health and safety of the public, common defense and security, and the quality of the environment. During the course of this process there have been occasions when an event or issue has or might have the potential for occurring at other facilities. This type of situation requires a prompt notificiation to others who may be similarly affected. Also, as a part of the NRC's licensing review process generic implications of events occur which may require licensees to then conduct a thorough evaluation of the problem and submit prompt formal reports to NRC. Currently there are 72 nuclear power plants licensed for operation and 89 plants which have received construction permits. In addition, applications for construction permits for 20 plants are under review. In the past, more than 90 percent of the generic problems identified have related to nuclear power plants. In addition to nuclear power plants, there are approximately 8,000 persons authorized by license to possess byproduct, source or special nuclear materials. Depending on the type of problem identified, the number of licensees affected could vary considerably. In the past notifications concerning possible generic problems have affected usually between 10 and 100 licensees. In one case in 1979, a notification of a possible generic problem was sent to approximately 4,900 licensees. The NRC estimates that respondent burden could average 139,000 hours annually per licensee depending on the number of events affecting each licensee and the complexity of reporting required for each event.

Norman F. Heyl,

Regulatory Reports Review Officer.

[FR Doc. 80-23680 Filed 8-5-80; 8:45 am]

BILLING CODE 1510-01-M

DEPARTMENT OF THE INTERIOR

Bureau of Land Management

Las Vegas District Grazing Advisory Board; Meeting

The Las Vegas District Grazing Advisory Board will meet Aug. 13 at 9 a.m. in the auditorium of the Caliente Elementary School, Caliente, NV.

The agenda is as follows: (1) Approval of previous meeting's minutes; (2) Introduction of the new district manager; (3) Discussion of FY-81 Range Betterment projects; (4) Discussion of the draft Barclay-Lime Mountain AMP; (5) Discussion of the Mustang AMP; (6) Public comment period; (7) Range tour of the Mustang Allotment.

The meeting is open to the public. Interested persons may make oral comments to the board during the public comment period or they may submit written comments for the board's consideration. Persons wishing to make an oral statement to the board must notify the District Manager (4765 W. Vegas Dr. or P.O. Box 5400, Las Vegas, NV 89102) prior to COB Aug. 12. Depending on the number of persons wishing to address the board, the District Manager may establish a per-person time limit.

Members of the public may also accompany the range tour, anticipated to leave Caliente at about 1 p.m., but they must provide their own transportation. Board members will be transported by BLM.

Summary minutes of the board meeting will be maintained at the district office. They will be available for inspection during regular business hours (7:30 a.m. to 4:15 p.m.) within 30 days after the meeting.

Dated: July 23, 1980.

Frank E. Bingham,

District Manager.

[FR Doc. 80-23679 Filed 8-5-80; 8:45 am]

BILLING CODE 4310-84-M

District Grazing Advisory Board, Susanville, Calif.; Meeting

Notice is hereby given in accordance with Pub. L. 92-463 that a meeting of the Susanville District Grazing Advisory Board will be held on September 9, 1980.

The meeting will begin at 10:00 a.m. in the Surprise Area Office of the Bureau of Land Management, Cedarville, California.

The agenda for the meeting will include:

1. Report from Oregon Fish and Wildlife Service.
2. Range Betterment Project Priority Outlook for fiscal year 1981.
3. Cowhead/Massacre ES Status.
4. Cal Neva and Willow Creek ES Status.
5. Report on Tuledad AMP.
6. Base Property Requirements, Sec. 15, Memo CA-80-273.
7. Wilderness Study Review.
8. Wild Horse Gathering Report.
9. Advisory Board Funds.

The meeting is open to the public. Interested persons may make oral statements to the Board between 3:30 and 4:30 p.m., or file a written statement for the Board's consideration. Anyone wishing to make an oral statement must notify the District Manager, Bureau of Land Management, P.O. Box 1090, Susanville, California 96130, by September 5, 1980. Depending on the number of persons wishing to make oral statements, a per person list limit may be established.

Summary minutes of the Board Meeting will be maintained in the District Office and will be available for public inspection and reproduction (during regular business hours) within 30 days following the meeting.

Herman L. Kast,

Acting District Manager.

[FR Doc. 80-23684 Filed 8-5-80; 8:45 am]

BILLING CODE 4310-84-M

Realty Action—Sale CA 6486; Public Lands in Plumas County, Calif.

July 28, 1980.

The following described land has been identified as suitable for disposal by sale under Section 203(a)(1) of the Federal Land Policy and Management Act of 1976, 43 U.S.C. 1713, at no less than the fair market value shown:

Legal description: Lot 18 in Sec. 24, T. 26 N., R. 9 E., Mount Diablo Meridian, California.

Acreage: 3.29.

Value: $22,500.00.

The above described land is being offered as a direct, noncompetitive sale to George and Alice Merrick, owners of the improvements on the sale tract. The land is bounded on three sides by privately-owned land. The Merricks own several structures on the land including a house which has been used by the family as their principal place of residence for many years. In 1978 the Merricks filed an application to obtain this land under the Color of Title Act, as amended, 43 U.S.C. 1068. However, the Merricks did not meet the requirements under the Act and their application was rejected. Therefore, disposal by direct sale, rather than public auction, will protect their equity investment in the improvements on the land, and eliminate an undue hardship if they were compelled to remove or otherwise dispose of the improvements. The lands are not required for any Federal purpose, and the public interest would be served by offering this land for sale.

The land will not be offered for sale until 60 days after the date of issuance of this notice.

The terms and conditions applicable to the sale are as follows:

1. All minerals in the land will be reserved to the United States in accordance with Section 209(a) of the Federal Land Policy and Management Act of 1976.
2. A right-of-way for ditches and canals will be reserved to the United States under 43 U.S.C. 945.
3. A right-of-way for a road will be reserved to the United States under Section 507 of the Federal Land Policy and Management Act of 1976.

Detailed information concerning the sale is available for review at the California State Office, Federal Office Building, 2800 Cottage Way, Sacramento, California 95825.

For a period of 45 days from the date of this notice, interested parties may submit comments to the Secretary of the Interior (LLM 320), Washington, D.C. 20240. Any adverse comments will be evaluated by the Secretary of the Interior who may vacate or modify this realty action and issue a final determination. In the absence of any action by the Secretary of the Interior, this realty action will become a final determination of the Department of the Interior.

Joan B. Russell,

Chief, Lands Section, Branch of Lands and Minerals Operations.

[FR Doc. 80-23619 Filed 8-5-80; 8:45 am]

BILLING CODE 4310-84-M

Office of the Secretary

Oil Shale Tract Delineation—Tract Selection Criteria; Meetings

Notice is hereby given that meetings to establish criteria for tract delineation and tract selection for additional prototype oil shale leasing will be held on August 25, 1980, from 9:00 a.m. until 4:30 p.m. at the Salt Palace, Room 128, Salt Lake City, Utah; and on August 28, 1980, from 8:30 a.m. until 4:00 p.m., at the Wyer Auditorium, Denver Public Library, 13th Ave. and Broadway, Denver, Colorado.

On May 27, 1980 a decision was rendered by James A. Joseph, Under Secretary of the Interior, to expand the Department's Prototype Oil Shale Leasing Program and to prepare for a permanent oil shale leasing program.

Pursuant to that decision the Department is initiating the process to determine criteria for delineating and selecting tracts to be leased in the expanded prototype program. The purpose of the meetings announced herein is to solicit comments in establishing these criteria.

The meetings in Salt Lake City and Denver will cover the same agenda. The meetings are open to the public. It is expected that space will permit approximately 100 persons to attend in addition to Department representatives.

A portion of each meeting will be devoted to a presentation of the issues. Following will be a comment period when interested persons may make brief presentations or file written statements. Written statements also may be submitted from the date of this announcement until August 27, 1980, to Mr. Henry O. Ash, Office of the Oil Shale Environmental Advisory Panel, Department of the Interior, Room 690, Building 67, Denver Federal Center, Denver, Colorado 80225. Further information concerning these meetings may be obtained from Mr. Ash's office (telephone number 303-234-3275).

James W. Curlin,

Deputy Assistant Secretary, Land and Water Resources.

August 1, 1980.

[FR Doc. 80-23643 Filed 8-5-80; 8:45 am]

BILLING CODE 4310-10-M

Oil Shale Task Force; Meetings

Notice is hereby given that meetings of the Oil Shale Task Force will be held on August 26, 1980, from 9:00 a.m. until 4:30 p.m., at the Salt Palace, Room 128, Salt Lake City, Utah; and on August 27, 1980, from 8:30 a.m. until 4:00 p.m., at the Wyer Auditorium, Denver Public Library, 13th Ave. and Broadway, Denver, Colorado.

The Oil Shale Task Force was established on May 17, 1980, pursuant to a decision of James A. Joseph, Under Secretary of the Interior, regarding expansion of the Department's Prototype Oil Shale Leasing Program and the preparation for a permanent oil shale leasing program. The purpose of the Task Force is to explore the issues involved in these two programs and present further information to the Under Secretary on the range of possible procedures that could be followed in achieving the objectives of his decisions and the effects that would flow from such procedures. The Task Force incorporates eleven Work Groups to address the issues involved. These Work Groups have met at various times throughout the summer and will provide consolidated reports of their findings to the Under Secretary on September 9, 1980 and October 1, 1980.

The purpose of the Task Force meetings announced herein is to solicit comment on Task Force findings prior to the submission of final reports to the Under Secretary.

The meetings in Salt Lake City and Denver will cover the same agenda. The meetings are open to the public. It is expected that space will permit approximately 100 persons to attend in addition to Task Force members. The first portion of each meeting will be devoted to presentation of Task Force work and findings. Following will be a comment period when interested persons may make brief presentations or file written statements. Written statements also may be submitted from the date of this announcement until August 27, 1980, to Mr. Henry O. Ash, Office of the Oil Shale Environmental Advisory Panel, Department of the Interior, Room 690, Building 67, Denver Federal Center, Denver, Colorado 80225. Further information concerning these meetings may be obtained from Mr. Ash's office [telephone number 303-234-3275].

James W. Curlin,

Deputy Assistant Secretary, Land and Water Resources.

August 1, 1980.

[FR Doc. 80-23644 Filed 8-5-80; 8:45 am]

BILLING CODE 4310-10-M

INTERNATIONAL DEVELOPMENT COOPERATION AGENCY

Administrator; Agency for International Development; Delegation of Authority No. 3, Legal Services To Trade and Development Program

1. Pursuant to authority vested in me by the International Development Cooperation Agency (IDCA) Delegation of Authority No. 4, effective July 1, 1980, I hereby delegate to the Administrator of the Agency for International Development (AID) the authority to provide legal counsel to the Trade and Development Program including, but not limited to, the functions of:

(A) providing legal advice by clearing and recommending approval of proposed contracts and agreements for transmission to the appropriate offices in AID;

(B) making recommendations to the Director of the Trade and Development Program concerning approval of proposed projects and determinations under § 607(a) of the Foreign Assistance Act; and

(C) providing any of the legal services as necessary to the Trade and Development Program.

2. The authority delegated herein may be redelegated to the General Counsel in AID, and successively redelegated as appropriate, and may be exercised by persons who are performing the functions of designated officers on an acting basis.

3. Nothwithstanding any provision of this Delegation of Authority the Director or Acting Director of the Trade and Development Program may at any time exercise any function delegated by this Delegation of Authority.

4. This delegation of Authority shall be deemed effective as of July 30, 1980 and actions within the scope of this delegation and any redelegation thereunder undertaking prior hereto which are consistent with the terms and scope of this delegation are hereby ratified and confirmed.

Dated: July 30, 1980.

Frank Stewart,

Acting Director, Trade and Development Program.

[FR Doc. 80-23431 Filed 8-5-80; 8:45 am]

BILLING CODE 4710-02-M

Agency for International Development

[Redelegation of Authority No. 5.25 and 38.23]

Asia Bureau, Authority of Mission Directors, et. al. To Waive Advertisement of Invitation for Bids; Amendment

Pursuant to the authority delegated to me by Delegation of Authority No. 5, dated December 29, 1961, (27 FR 499), as amended and Delegation of Authority No. 38, dated June 3, 1977 (42 FR 31511), I hereby amend Redelegation of Authority No. 38.23 dated September 6, 1979 (44 FR 184), as follows:

a. Immediately after the words "Redelegation of Authority" in the Title, delete the word "No." and insert in lieu thereof, the words "Nos. 5.25 and".

b. Immediately after the words "of Authority" in line two of the introductory paragraph, insert the words "No. 5, dated December 29, 1961 (27 F.R. 499) as amended, and Delegation of Authority".

c. Immediately prior to the words "Any person" in paragraph two, insert a new sentence to read as follows: "The sole basis for issuing such waivers shall be to avoid serious delay in project implementation."

Except as hereby amended, the subject redelegation remains in full force and effect.

This amendment is effective immediately.

Dated: June 26, 1980.

John H. Sullivan,

Assistant Administrator Bureau for Asia.

[FR Doc. 80-23613 Filed 8-5-80; 8:45 am]

BILLING CODE 4710-02-M

INTERSTATE COMMERCE COMMISSION

Motor Carrier Permanent Authority Decisions; Decision-Notice

The following applications, filed on or after July 3, 1980, are governed by Special Rule 247 of the Commission's Rules of Practice, see 49 CFR 1100.247. Special rule 247 was published in the Federal Register of July 3, 1980, at 45 FR 45539.

Persons wishing to oppose an application must follow the rules under 49 CFR 1100.247(B). A copy of any application, together with applicant's supporting evidence, can be obtained from any applicant upon request and payment to applicant of $10.00.

Amendments to the request for authority are not allowed. Some of the applications may have been modified prior to publication to conform to the Commission's policy of simplifying grants of operating authority.

Findings:

With the exception of those applications involving duly noted problems (e.gs., unresolved common control, fitness, water carrier dual operations, or jurisdictional questions) we find, preliminarily, that each applicant has demonstrated its proposed service warrants a grant of the application under the governing section of the Interstate Commerce Act. Each applicant is fit, willing, and able to perform the service proposed, and to conform to the requirements of Title 49, Subtitle IV, United States Code, and the Commission's regulations. Except where noted, this decision is neither a major Federal action significantly affecting the quality of the human environment nor a major regulatory action under the Energy Policy and Conservation Act of 1975.

In the absence of legally sufficient protests in the form of verified statements filed within 45 days of publication of this decision-notice (or, if the application later becomes unopposed) appropriate authority will be issued to each applicant (except those with duly noted problems) upon compliance with certain requirements which will be set forth in a notice that the decision-notice is effective. Within 60 days after publication an applicant may file a verified statement in rebuttal to any statement in opposition.

To the extent that any of the authority granted may duplicate an applicant's other authority, the duplication shall be construed as conferring only a single operating right.

Note.—All applications are for authority to operate as a motor common carrier in interstate or foreign commerce over irregular routes, unless noted otherwise. Applications for motor contract carrier authority are those where service is for a named shipper "under contract".

Volume No. OPI-004

Decided: July 25, 1980.

By the Commission, Review Board Number 2, Members Chandler, Eaton and Liberman.

MC 119741 (Sub-271F), filed July 21, 1980. Applicant: GREEN FIELD TRANSPORT COMPANY, INC., 1515 Third Ave., NW., P.O. Box 1235, Fort Dodge, IA 50501. Representative: D. L. Robson (same address as applicant). Transporting *meats, meat products, and meat byproducts, and articles distributed by meat-packing houses,* as described in Sections A and C of Appendix I to the report in *Descriptions in Motor Carrier Certificates,* 61 M.C.C. 209 and 766 (except commodities in bulk and hides), from the facilities of Iowa Beef Processors, Inc., at or near Holcomb, KS, to points in IL, IN, IA, KS, KY, MI, MN, MO, NE, ND, OH, SD, and WI.

MC 139330 (Sub-6F), filed July 21, 1980. Applicant: F.V.T., INC., 106 Howard Dr., Williamstown Junction, NC 08094. Representative: Edward G. Villalon, 1032 Pennsylvania Bldg., Pennsylvania Ave. & 13th St., NW., Washington, DC 20004. Transporting (1) *fibrous glass products, mineral wool, mineral wool products, and insulating products,* and (2) *materials, equipment and supplies* used in the manufacture of the commodities in (1) above, between points in Baltimore County, MD, Middlesex and Camden Counties, NJ, DeKalb, Fulton, and Clarke Counties, GA, DuPage County, IL, Shelby County, TN, Dallas County, TX, Luzerne County, PA, Whitley County, KY, Wyandotte County, KS, Madera County, CA, Allen County, IN, and Marion and Shelby Counties, OH, on the one hand, and, on the other, points in the U.S. (except AK and HI).

MC 146451 (Sub-32F), filed July 21, 1980. Applicant: WHATLEY-WHITE, INC., 230 Ross Clark Circle, NE., Dothan, AL 36302. Representative: R. S. Richard, P.O. Box 2069, Montgomery, AL 36197. Transporting *wood burning furnace components,* from Dothan, AL, to Kewanee, IL.

Volume No. OP2-002

Decided: July 28, 1980.

By the Commission, Review Board Number 3, Members Parker, Fortier, and Hill.

MC 112713 (Sub-307F), filed July 17, 1980. Applicant: YELLOW FREIGHT SYSTEM, INC., P.O. Box 7270, Overland Park, KS 66207. Representative: John M. Records (same address as applicant). Over regular routes, transporting *general commodities* (except household goods as defined by the Commission and classes A and B explosives), moving on bills of lading of freight forwarders under 49 U.S.C. 10102(8), between the junction of Interstate Hwy 75 and U.S. Hwy 27, and Tampa, FL, over interstate Hwy 75, serving no intermediate points.

Note.—Applicant intends to tack the authority sought with its authority in MC 112713.

MC 127042 (Sub-300F), filed July 18, 1980. Applicant: HAGEN, INC., P.O. Box 3208, Sioux City, IA 51102. Representative: Fred E. Hagen (same address as applicant). Transporting *general commodities* (except those of unusual value, classes A and B explosives, household goods as defined by the Commission, commodities in bulk, and those requiring special equipment, from points in Cook, DuPage, Kane, Kendall, Lake and Will Counties, IL, to points in IA, KS, NE and SD.

MC 149443F filed July 8, 1980. Applicant: YELLOW FREIGHT SYSTEM, INC., P.O. Box 7270, Overland Park, KS 66207. Representative: John M. Records (same as applicant). Robert E. DeLand (same as applicant). *Contract carrier,* transporting *general commodities* (except those of unusual value, classes A and B explosives, household goods as defined by the Commission, commodities in bulk, and those requiring special equipment), between points in the U.S.

MC 151302F, filed July 16, 1980. Applicant: DONALD E. REYNOLDS d.b.a. BAR-TRAN, CO., 506 Manor, Box 119, Rock Port, MO 64482. Representative: Donald E. Reynolds (same as applicant). Transporting *petroleum and petroleum products,* in tank vehicles, between points in Wyandotte County, KS, on the one hand, and, on the other, points in DeKalb, Clay, Holt, and Atchison Counties, MO.

Volume No. OP2-005

Decided: July 28, 1980.

By the Commission, Review Board Number 3, Members Parker, Fortier, and Hill.

MC 123872 (Sub-117F), filed July 23, 1980. Applicant: W & L MOTOR LINES, INC., P.O. Box 3467, Hickory, NC 28601. Representative: Allen E. Bowman (same address as applicant). Transporting *meats, meat products, meat by-products and articles distributed by meat packinghouses* (except commodities in bulk and hides), between Finney County, KS, on the one hand, and, on the other, points in AL, FL, GA, IL, IN, IA, KS, KY, MI, MN, MS, MO, NE, NC, ND, OH, SC, SD, TN, VA and WI.

MC 123872 (Sub-118F), filed July 23, 1980. Applicant: W & L MOTOR LINES, INC., P.O. Box 3467, Hickory, NC 28601. Representative: Allen E. Bowman (same address as applicant). Transporting *plastic articles* (except in bulk) (1) between points in NC, on the one hand, and, on the other, points in AZ, CA, CO, FL, GA, ID, IL, IA, KS, MN, MO, MT, NE, NV, NM, ND, OK, OR, SD, TX, UT, WA, WI, and WY; and (2) between points in IL, on the one hand, and, on the other, points in AZ, CA, CO, FL, GA, ID, IA, KS, MN, MO, MT, NE, NV, NM, ND, NC, OK, OR, SC, SD, TN, TX, UT, VA, WA, WI, and WY.

MC 145102 (Sub-66F), filed July 21, 1980. Applicant: FREYMILLER TRUCKING, INC., 1400 S. Union Avenue, Bakersfield, CA 93307. Representative: Michael J. Wyngaard, 150 E. Gilman Street, Madison, WI 53703. Transporting *cheese and cheese products* from Livingston, WI to points in TX.

Volume No. OP3-002

Decided: July 25, 1980.

By the Commission, Review Board Number 1, Members Carleton, Joyce, and Jones.

MC 140665 (Sub-112F), filed July 21, 1980. Applicant: PRIME, INC., P.O. Box 4208, Springfield, MO 65804. Representative: H. J. Anderson (same address as applicant). Transporting *meats, meat products, meat byproducts, and articles distributed by meat packing houses,* as described in Sections A and C of Appendix I to the report in *Descriptions in Motor Carrier Certificates,* 61 M.C.C. 209 and 766, (except commodities in bulk and hides), from the facilities of Iowa Beef Processors, Inc., at or near Holcomb, KS, to points in AZ, CA, CO, ID, MT, NV, NM, OR, UT, WA, WY, IL, IN, IA, KS, KY, MI, MN, MO, NE, ND, OH, SD, WI, AR, LA, OK, TX, AL, FL, GA, MS, NC, SC, and TN.

Agatha L. Mergenovich,

Secretary.

[FR Doc. 80-23659 Filed 8-5-80; 8:45 am]

BILLING CODE 7035-01-M

Motor Carriers Permanent Authority Decisions; Decision-Notice

The following applications, filed on or after July 3, 1980, are governed by Special Rule 247 of the Commission's Rules of Practice, see 49 CFR 1100.247. Special rule 247 was published in the Federal Register on July 3, 1980, at 45 FR 45539.

Persons wishing to oppose an application must follow the rules under 49 CFR 1100.247(B). Applications may be protested *only* on the grounds that applicant is not fit, willing, and able to provide the transportation service and to comply with the appropriate statutes and Commission regulations. A copy of any application, together with applicant's supporting evidence, can be obtained from any applicant upon request and payment to applicant of $10.00.

Amendments to the request for authority are not allowed. Some of the applications may have been modified prior to publication to conform to the Commission's policy of simplifying grants of operating authority.

Findings

With the exception of those applications involving duly noted problems (e.gs., unresolved common control, fitness, water carrier dual operations, or jurisdictional questions) we find, preliminarily, that each applicant has demonstrated its proposed service warrants a grant of the application under the governing section of the Interstate Commerce Act. Each applicant is fit, willing, and able to perform the service proposed, and to conform to the requirements of Title 49, Subtitle IV, United States Code, and the Commission's regulations. Except where noted, this decision is neither a major Federal action significantly affecting the quality of the human environment nor a major regulatory action under the Energy Policy and Conservation Act of 1975.

In the absence of legally sufficient protests in the form of verified statements filed on or before September (or, if the application later becomes unopposed) appropriate authority will be issued to each applicant (except those with duly noted problems) upon compliance with certain requirements which will be set forth in a notice that the decision-notice is effective. Within 60 days after publication an applicant may file a verified statement in rebuttal to any statement in opposition.

To the extent that any of the authority granted may duplicate an applicant's other authority, the duplication shall be construed as conferring only a single operating right.

Note.—All applications are for authority to operate as a motor common carrier in interstate or foreign commerce over irregular routes, unless noted otherwise. Applications for motor contract carrier authority are those where service is for a named shipper "under contract".

Volume No. OPI-003

Decided: July 25, 1980.

By the Commission, Review Board Number 2, Members Chandler, Eaton and Liberman.

MC 128570 (Sub-21F), filed July 23, 1980. Applicant: BROOKS ARMORED CAR SERVICE, INC., 13 East 35th St., Wilmington, DE 19802. Representative: James F. Flint, Suite 406, 918 16th St., NW, Washington, DC 20006. Transporting *shipments weighing 100 pounds or less* if transported in a motor vehicle in which no one package exceeds 100 pounds, between points in the U.S.

MC 151351F, filed July 15, 1980. Applicant: MARCO EXPRESS FREIGHT, 1976 Linn, North Kansas City, MO 64116. Representative: William E. Martin (same address as applicant). Transporting *shipments weighing 100 pounds or less,* if transported in a vehicle in which no one package exceeds 100 pounds, between points in the U.S.

Volume No. OP2-004

Decided: July 28, 1980.

By the Commission, Review Board Number 3, Members Parker, Fortier and Hill.

MC 117142 (Sub-5F), filed July 23, 1980. Applicant: AMERICAN TRAILER HAUL, INC., 609B South Main Street, Woodstock, GA 30188. Representative: Archie B. Culbreth, Suite 202, Century Parkway, Atlanta, GA 30345. Transporting *general commodities* (except used household goods as defined by the Commission, hazardous or secret materials, and sensitive weapons and munitions) for the U.S. Government, between points in AL, AR, FL, GA, IL, IN, KY, MD, MS, NC, OH, OK, PA, SC, TN, TX, VA and WV.

MC 141523 (Sub-1F), filed July 21, 1980. Applicant: C. R. KIDD PRODUCE, INC., P.O. Box 364, Springdale, AR 72764. Representative: Connie Ray Kidd (same address as applicant). Transporting *general commodities* (except used household goods, hazardous or secret materials, and sensitive weapons and munitions), between points in U.S., restricted to traffic handled for the U.S. Government.

MC 151353F, filed July 22, 1980. Applicant: GOULD BROTHERS TRUCKING, RR #3 Box 17B, Aberdeen,

SD 57401. Representative: Charles A. Gould (same address as applicant). Transporting *food and other edible products* (except alcoholic beverages and drugs) intended for human consumption, *agricultural limestone and other soil conditioners* and *agricultural fertilizers*, if such transportation is provided with the owner of the motor vehicle in such vehicle, except in emergency situations, between points in the U.S.

Agatha L. Mergenovich,

Secretary.

[FR Doc. 80-23658 Filed 8-5-80; 8:45 am]

BILLING CODE 7035-01-M

Motor Carrier Temporary Authority Application

The following are notices of filing of applications for temporary authority under Section 10928 of the Interstate Commerce Act and in accordance with the provisions of 49 CFR 1131.3. These rules provide that an original and two (2) copies of protests to an application may be filed with the Regional Office named in the Federal Register publication no later than the 15th calendar day after the date the notices of the filing of the application is published in the Federal Register. One copy of the protest must be served on the applicant, or its authorized representative, if any, and the protestant must certify that such service has been made. The protest must identify the operating authority upon which it is predicated, specifying the "MC" docket and "Sub" number and quoting the particular portion of authority upon which it relies. Also, the protestant shall specify the service it can and will provide and the amount and type of equipment it will make available for use in connection with the service contemplated by the TA application. The weight accorded a protest shall be governed by the completeness and pertinence of the protestant's information.

Except as otherwise specifically noted, each applicant states that there will be no significant effect on the quality of the human environment resulting from approval of its application.

A copy of the application is on file, and can be examined at the ICC Regional Office to which protests are to be transmitted.

Note.—All applications seek authority to operate as a common carrier over irregular routes except as otherwise noted.

Motor Carriers of Property

Notice No. F-46

The following applications were filed in Region I. Send protests to Regional Authority Center, Interstate Commerce Commission, 150 Causway St., Rm. 501, Boston, MA 02114.

MC 151369 (Sub-1-1TA), filed July 25, 1980. Applicant: VIGEANT FREIGHT SYSTEM, INC., 676 Dartmouth Street, South Dartmouth, MA 02748. Representative: Francis E. Barrett, Jr., Esq., 10 Industrial Park Road, Hingham, MA 02043. *Ladies wearing apparel and accessories and materials and supplies used in the manufacture thereof* between No. Dartmouth, MA and points in PA, NJ, TN and New York, NY. Supporting shipper: Kay Windsor Co., 375 Faunce Corner Road, No. Dartmouth, MA 02747.

MC 42828 (Sub-1-2TA), filed July 28, 1980. Applicant: THEODORE ROSSI TRUCKING CO., INC., 9 South Vine Street, Barre, Vermont 05641. Representative: William L. Rossi, P.O. Box 332, Barre, Vermont 05641. Supporting shippers: Rock of Ages Corporation, P.O. Box 482, Barre, Vermont 05641. Rock of Ages Building Granite Corporation, McGuire Street, Concord, New Hampshire. Transporting stone, between points in and east of Texas, Oklahoma, Missouri, Illinois, and Wisconsin on the one hand, and on the other, Barre, Vermont. The purpose of this Application is to substitute single line service for existing joint line service.

MC 141516 (Sub-1-1TA), filed July 28, 1980. Applicant: RICHARD L. HODGES, INC., P.O. Box 141, Unity, ME 04988. Representative: John C. Lightbody Esq., Murray, Plumb & Murray, 30 Exchange Street, Portland, ME 04101. *Frozen foodstuffs and dry potato products* from points in Portland, ME to DE, DC, IL, IN, KY, MI, MO, NJ, NY, OH and PA. Supporting shipper: McCain Foods, Inc., Washburn, ME 04786.

MC 148893 (Sub-1-1TA), filed July 29, 1980. Applicant: WREN TRUCKING, INC., 572 Kennedy Road, Cheektowaga, NY 14227. Representative: James E. Brown, 36 Brunswick Road, Depew, NY 14043. (1) *Foodstuff (except in bulk)*, from the facilities of General Mills located in Buffalo, NY, to points in CT, DC, MA, MD, ME, NJ, NY, OH, PA, RI, IL, IN, MI, WV; (2) *Related materials, supplied and equipment in the manufacture, production, packaging, sale or distribution of such commodities*, in reverse direction.

MC 151389 (Sub-1-1TA), filed July 29, 1980. Applicant: T.R. & SONS TRUCKING INC., Garfield Avenue at 3rd Avenue, Kearny, NJ 07032. Representative: George A. Olsen, P.O. Box 357, Gladstone, NJ 07934. *(1) Appliances; furniture; radios; television sets; cameras; wheeled goods; petroleum products; chemicals; paints; displays; metal, paper, and plastic articles; hardware; books; packaging materials; dyes; colorings; and flavoring compounds; (2) Materials, equipment, and supplies used in the manufacture, sale, and distribution of the commodities named in (1) above (except commodities in bulk in tank vehicles)*, between points in NJ; and New York, NY Commercial Zone; the Philadelphia, PA Commercial Zone; and Suffolk County, NY. Supporting shipper(s): Sayo Electric Co., 200 Riser Rd., Little Ferry, NJ; Deijon Co., 163 E. Union Ave., E. Rutherford, NJ; H. Kohnstamni & Co., 555 Columbia St., Brooklyn, NY.

MC 141932 (Sub-1-8TA), filed July 25, 1980. Applicant: POLAR TRANSPORT, INC., 176 King Street, Hanover, MA 02339. (1) Paper, (2) paper products, (3) printed matter, (4) materials, equipment and supplies used in the manufacture, sale and distribution of the commodities named, (5) commodities otherwise exempt from economic regulation under Section 49 U.S.C. 10526(a)(6) of the Interstate Commerce Act, in mixed shipments with commodities described in (1), (2), (3), (4) above (except commodities in bulk and commodities, the transportation of which, because of size or weight require the use of special equipment), between Boston, Hingham, Plymouth and Westwood, MA and Wells, ME on the one hand, and, on the other, points in the United States, except AK and HI, restricted to the movement of traffic from or to the facilities of, or used by, Clark-Franklin-Kingston Press, Print Mail, Inc., and Spencer Press, Inc. Supporting shippers: Clark-Franklin, Kingston Press, Print Mail, Inc. and Spencer Press, Inc.

MC 144428 (Sub-1-3TA), filed July 29, 1980. Applicant: TRUCKADYNE INC., Route 16, Mendon, MA 01756. Representative: Joseph A. Reed, Truckadyne Inc., Route 16, Mendon, MA 01756. Contract carrier irregular routes, *abrasives, abrasives grains and powders and materials and supplies* used in the manufacture, processing sale and use of such commodities between points in the forty-eight (48) contiguous states. Under a continuing contract with Micro Abrasives Corporation, Westfield, MA. Supporting shipper: Micro Abrasives Corp., Westfield, MA.

MC 144428 (Sub-1-3TA), filed July 29, 1980. Applicant: TRUCKADYNE INC., Route 16, Mendon, MA 01756. Representative: Joseph A. Reed,

Truckadyne Inc., Route 16, Mendon, MA 01756. *Contract* carrier irregular routes, *abrasives, abrasives grains and powders and materials and supplies* used in the manufacture, processing sale and use of such commodities between points in the forty-eight (48) contiguous states. If under a continuing contract with Micro Abrasives Corporation, Westfield, MA. Supporting shipper: Micro Abrasives Corp. Westfield, MA.

MC 139424 (Sub-1-1TA), filed July 28, 1980. Applicant: FISHER TRUCKING COMPANY, INC., Lincoln & Passmore, Hammonton, NJ 08037. Representative: Raymond A. Thistle, Jr., Five Cottman Court, Homestead Rd. & Cottman St., Jenkintown, PA 19046. *Petroleum fuel oils, gasoline, residual fuel oils, gasohol* and *distillates* from the facilities of Amerada Hess Corporation located at Delair, NJ to PA and DE, and located at Philadelphia, PA to NJ and DE. Supporting shipper: Ameradas Hess Corporation, 1 Hess Plaza Woodbridge, NJ 07095.

MC 115353 (Sub-1-4TA), filed July 7, 1980. Applicant: LOUIS J. KENNEDY TRUCKING COMPANY, 342 Schuyler Avenue, Kearny, NJ 07032. Representative: Morton E. Kiel, Suite 1832, 2 World Trade Center, New York, NY 10048. *Contract,* irregular, transporting *steel articles and commodities used in the manufacture and distribution thereof,* between the facilities of Raritan River Steel Co. at Perth Amboy, NJ, on the one hand, and, on the other, points in the United States in and east of MN, IA, MO, AR and LA, under a continuing contract(s) with Raritan River Steel Co. located at Perth Amboy, NJ. Supporting shipper: Raritan River Steel Co., P.O. Box 309, Perth Amboy, NJ 08862.

MC 134806 (Sub-1-3TA), filed July 25, 1980. Applicant: B-D-R TRANSPORT, INC., P.O. Box 1277. Vernon Drive, Brattleboro, VT 05301. Representative: Francis J. Ortman, 7101 Wisconsin Avenue, Suite 605, Washington, DC 20014. *Contract* carrier: irregular routes, *plastic articles, in cartons,* from Malden, MA to Denver, CO, Salt Lake City, UT, Reno, NV and points in CA under continuing contract with Century Products, Inc. Supporting shipper: Century Products, Inc., 171 Medford Street, Malden, MA 02148.

MC 140768 (Sub-1-9TA), filed July 25, 1980. Applicant: AMERICAN TRANS-FREIGHT, INC., P.O. Box 796, Manville, NJ 08835. Representative: Eugene M. Malkin, Suite 1832, 2 World Trade Center, New York, NY 10048. *Such commodities as are manufactured, dealt in or used by a manufacturer and distributor of bicycles and bicycle parts,* between Little Rock, AR, on the one hand, and, on the other, points in AL, FL, GA, LA, MS and TX. Restricted to shipments originating at or destined to the facilities of AMF Cycles Division, AMF, Inc. at or near Little Rock, AR. Supporting shipper: AMF Cycles Division, AMF, Inc., P.O. Box 344, Olney, IL 62450.

MC 143552 (Sub-1-2TA), filed July 25, 1980. Applicant: CELEWEND ASSOCIATES, INC., 1 Whitfield Court, Caldwell, NJ 07006. Representative: George A. Olsen, P.O. Box 357, Gladstone, NJ 07934. *Contract carrier:* irregular routes: *(1) Washing, cleaning and scouring compounds, fabric and textile softeners, soap and soap powders; (2) Materials, equipment, and supplies used in the manufacture and sale of the commodities named in (1) above (except commodities in bulk in tank vehicles),* Between points in the US. Supporting shipper(s): PUREX CORPORATION, 1414 N. Radcliffe St., Bristol, PA 19007.

The following applications were filed in Region 2. Send protests to: ICC, Federal Reserve Bank Bldg., 101 N. 7th St., Room 620, Philadelphia, PA 19106.

Originally published in the Federal Register July 14, 1980.[1]

MC 107012 (Sub-II-55TA), filed July 1, 1980. Applicant: NORTH AMERICAN VAN LINES, INC., 5001 U.S. Hwy. 30 West, P.O. Box 988, Fort Wayne, IN 46801. Representative: David D. Bishop (same as applicant). *Parts, materials and supplies used in the manufacture of toys and games (except commodities in bulk and commodities which because of size or weight require the use of specialized equipment),* between Edison and South Plainfield, NJ, on the one hand, and, on the other, pts. in Los Angeles and Orange Counties, CA for 180 days. (Restricted to traffic originating at or destined to the facilities of Mattel Toys). An underlying ETA seeks 90 days authority. Supporting shipper: Mattel Toys, 5150 Rosecrans Ave., Hawthorne, CA 90250.

Note.—Common control may be involved.

MC 107012 (Sub-II-66TA), filed July 24, 1980. Applicant: NORTH AMERICAN VAN LINES, INC., 5001 U.S. Hwy. 30 West, P.O. Box 988, Fort Wayne, IN 46801. Representative: Stephen C. Clifford (same as applicant). *Sporting goods equipment and parts therefor* from the facilities of Medalist Industries, Inc. at or near Crivitz, WI; San Diego, CA; Los Angeles, CA; and Leesburg, FL to points in the US (except AK and HI) for 270 days. Supporting shipper: Medalist Industries, Inc., 11525 Sorrento Valley Rd., San Diego, CA 92121.

Note.—Common control may be involved.

MC 112184 (Sub-II-2TA), filed July 25, 1980. Applicant: THE MANFREDI MOTOR TRANSIT CO., 11250 Kinsman Rd., Newbury, OH 44065. Representative: David A. Turano, 100 E. Broad St., Columbus, OH 43215. *Contract: irregular; paint and paint products, in bulk,* from Cleveland, OH to pts. in PA and LA for 270 days. Supporting shipper: P.P.G. Industries, Inc., 1 Gateway Ctr., Pittsburgh, PA 15222.

MC 151229 (Sub-II-1TA), filed July 24, 1980. Applicant: JOHN L. OWEN d.b.a. CHESTER NEWELL TRANSIT, 451 Lycia Ave., Chester, WV 26034. Representative: John L. Owen (same as applicant). *Common; regular: Passengers* between Chester, Newell, and Waterford Park, WV; and East Liverpool and Calcutta, OH for 270 days. Serving all pts. below: (1) From Chester, WV south on Rte. 2 to Newell, WV, then continue south on Rte. 2 to Waterford Park, WV. (2) From Waterford Park, WV north on Rte. 2 to Newell, WV, then continue north on Rte. 2 over Newell Bridge into East Liverpool, OH. (3) From East Liverpool, OH north on Old Rte. 30 to Calcutta, OH. (4) From Calcutta, OH south on Old Rte. 30 to East Liverpool, OH, then east on Rte. 30 over Jennings Randolph Bridge to Chester, WV. An underlying ETA seeks 120 days authority. Supporting shipper(s): J. Floyd Peddycord, President, Golden Age Club, Senior Citizens, 336 Carolina Ave., Chester, WV.

MC 150769 (Sub-II-2TA), filed July 24, 1980. Applicant: ROBERT B. CONNERS TRUCKING CO., P.O. Box 3402, Morgantown, WV 26505. Representative: Robert B. Conners (same address as applicant). *Crushed stone,* between Fairchance, PA and pts. in WV, for 270 days. Restricted to traffic destined to facilities of VICO, Inc. An underlying ETA seeks 90 days authority. Supporting shipper: VICO, Inc., P.O. Box 486, Fairchance, PA 15436.

MC 102616 (Sub-II-14TA), filed July 24, 1980. Applicant: COASTAL TANK LINES, INC., 250 N. Cleveland-Massillon Rd., Akron, OH 44313. Representative: W. M. Kiefaber (same address as applicant). *Petroleum and Petroleum Products, in bulk, in tank vehicles,* from Todhunter, OH to Robinson, IL, for 270 days. Supporting shipper: Marathon Oil Co., Houston, TX 77001.

MC 61977 (Sub-II-2TA), filed July 22, 1980. Applicant: ZERKLE TRUCKING,

[1] The purpose of this republication is to add "Counties" to clarify the destination pts. of Los Angeles and Orange, CA.

2400 Eighth Ave., Huntington, WV 25703. Representative: N. W. Bowen, Jr., (same as applicant). *Such commodities as are dealt in by retail, wholesale grocery and food business houses,* except commodities in bulk, between points in OH, on the one hand, and on the other, points in KY and WV, for 270 days. An underlying ETA seeks 120 days authority. Supporting shipper(s): Fostoria Distribution Services Co., P.O. Box D, Fostoria, OH 44830.

MC 21866 (Sub-II-27TA), filed July 23, 1980. Applicant: WEST MOTOR FREIGHT, INC., 740 S. Reading Ave., Boyertown, PA 19512. Representative: Alan Kahn, 1430 Land Title Bldg., Philadelphia, PA 19110. *Television tubes,* and *equipment, parts and materials* used in the manufacture and distribution of television tubes (except commodities in bulk), between the facilities of RCA Corporation at Marion, IN and Dunmore, PA, on the one hand, and, on the other, Forrest City, AR and Greeneville, TN, for 270 days. An underlying ETA seeks 120 days authority. Supporting shipper(s): RCA Corporation, Bldg. 204-2 Route 38, Cherry Hill, NJ 08358.

MC 151328 (Sub-II-1TA), filed July 21, 1980. Applicant: BARBARA R. WOMACK, d.b.a., THRIFTY RED CARPET COACHES, 3803 Fort Hill Dr., Alexandria, VA 22310. Representative: Gary E. Thompson, 4304 East-West Hwy., Washington, DC 20014. *Passengers and their baggage* between pts. in MD, VA, Adams County, PA, Jefferson County, WV, and Washington, DC, for 270 days. An underlying ETA seeks 120 days authority. Supporting shipper: Thrifty Tours, Inc., 438 Woodward Bldg., Washington, DC 20005.

MC 116763 (Sub-II-22TA), filed July 21, 1980. Applicant: CARL SUBLER TRUCKING, INC., North West St., Versailles, OH 45380. Representative: Gary J. Jira (same address as applicant). *General commodities* (except commodities in bulk, in tank vehicles, used household furniture, commodities the transportation of which, because of size or weight, require the use of special equipment, automobiles, trucks and buses as described in the Report in Descriptions in Motor Carrier Certificates, 61 MCC 209 and 766, and explosives), between points in the United States (except AK and HI), for 270 days. Restricted to traffic originating at, or destined to the facilities utilized by Abbott Laboratories, Inc. Supporting shipper(s): Abbott Laboratories, Inc., Dept. 277, 1400 Sheridan Rd., Chicago, IL 60064.

MC 123744 (Sub-II-8TA), filed July 23, 1980. Applicant: BUTLER TRUCKING CO., P.O. Box 88, Woodland, PA 16881. Representative: Dwight L. Koerber, Jr., P.O. Box 1320, 11 N. 2nd St., Clearfield, PA 16830. *Refractories and materials and supplies used in the manufacture or distribution of refractories except commodities in bulk,* between E. Canton, OH on the one hand, and, on the other, pts. in the U.S. in and east of ND, SD, NB, KS, OK, and TX, for 270 days. An underlying ETA seeks 120 days authority. Supporting shipper: Crescent Brick Co., P.O. Box 1110, Clearfield, PA 16830.

MC 67646 (Sub-II-2TA), filed July 17, 1980. Applicant: HALL'S MOTOR TRANSIT COMPANY, 6060 Carlisle Pike, Mechanicsburg, PA 17055. Representative: Edward W. Kelliher (same address as applicant). Authority sought: *Common;* regular routes, *General commodities* (except those of unusual value, livestock, classes A and B explosives, commodities in bulk, commodities requiring special equipment, and household goods as defined by the Commission, serving Vesper, WI, and points in its commercial zone, as off-route points in connection with the carrier's authorized regular-route operations. Applicant intends to tack authority sought herein with authority held under docket numbers MC 67646 and MC 8600. Supporting shipper: Sanna Division-Beatrice Foods Company, P.O. Box 8046, Madison, WI 53708.

MC 151142 (Sub-II-2TA), filed July 17, 1980. Applicant: H&H TRANSPORTATION, INC., 1425 East Main St., Newark, OH 43055. Representative: Paul F. Beery, 275 E. State St., Columbus, OH 43215. *(1) containers, and (2) equipment, materials and supplies used in the manufacture, sale, and distribution of containers (except commodities in bulk),* between Bridgewater, NJ, on the one hand, and, on the other, OH, IN, KY, WV, PA, and the lower peninsula of MI for 180 days. An underlying ETA seeks 90 days authority. Supporting shipper: Prospect Industries Incorporated, 9 Finderne Ave., Bridgewater, NJ 08807.

MC 56388 (Sub-2-4TA), filed July 17, 1980. Applicant: HAHN TRANSPORTATION, INC., New Market, MD 21774. Representative: Francis J. Ortman, 7101 Wisconsin Ave., Suite 605, Washington, DC 20014. *Cement* from Martin Marietta Cement Plant in Martinsburg, WV, Baltimore, MD and DC to points and places in MD, DC, VA, WV, PA, and DE, for 270 days. An underlying ETA seeks 90 days authority. Supporting shipper: Martin Marietta Cement, 2 Hamill Road, P.O. Box 5618, Baltimore, MD 21210.

MC 148116 (Sub-II-1TA), filed July 21, 1980. Applicant: TOM JOSEPH ENTERPRISES, INC., 6320 Promler, NW, North Canton, OH 44720. Representative: Kevin R. Reichley, 50 W. Broad St., Suite 1815, Columbus, OH 43215. *Automobiles,* in secondary movements, between Dallas, Houston, San Antonio and Austin, TX, on the one hand, and, on the other, Alexandria, VA; Atlanta, GA; Miami, FL and Elizabeth and Newark, NJ, for 270 days. An underlying ETA seeks 120 days authority. Supporting shipper(s): Auto Movers, Inc., 2818 S. Eastern Ave., Los Angeles, CA 90040.

MC 123387 (Sub-II-2TA), filed July 21, 1980. Applicant: E. E. HENRY, INC., 1128 South Military Highway, Chesapeake, VA 23320. Representative: Dwight L. Koerber, Jr., P.O. Box 1320, 110 North Second Street, Clearfield, PA 16830. *Appliances,* between Chesapeake, VA, on the one hand, and, on the other, points in the United States in and east of WI, IL, KY, TN, and MS, for 270 days. Supporting shipper: Warwick Manufacturing Co., 1112 Cavalier Bldg., Chesapeake, VA 23220.

MC 113666 (Sub-II-11TA), filed July 21, 1980. Applicant: FREEPORT TRANSPORT, INC., P.O. Drawer A, Freeport, PA 16229. Representative: R. Scott Mahood (same address as applicant). *Industrial plaster,* from Gyposum, OH to New Eagle, PA. Supporting shipper: Allied Block Chemical Company, P.O. Box 455, Pine Street, New Eagle, PA 15067.

MC 151196 (Sub-II-1TA), filed July 14, 1980. Applicant: ARTHUR F. HAZEN & SON, INC., 525 Spring Ave., Ellwood City, PA 16117. Representative: Charles W. Garbett, 317 7th St., Ellwood City, PA 16117. Contract: Irregular: *Petroleum products, gasoline, fuel oil and related products,* (1) from Harmony, Ellwood City, Pittsburgh, PA to Youngstown, Canton, Warren and Ashtabula, OH; and (2) from Nowell, WV to Harmony, Ellwood City, Pittsburgh, PA and Youngstown, Canton, Warren and Ashtabula, OH, for 270 days. An underlying ETA seeks 120 days authority. Supporting shipper: Mid-Penn Refining Co., Harmony, PA 16037.

MC 107012 (Sub-II-64TA), filed July 21, 1980. Applicant: NORTH AMERICAN VAN LINES, INC., 5001 U.S. Hwy. 30 West, P.O. Box 988, Fort Wayne, IN 46801. Representative: David D. Bishop (same address as applicant). *Carpet and carpet samples,* from the facilities of Dan River Floor Covering Division at or near Greenville, SC to points in MN for 270 days. An

underlying ETA seeks 120 days authority. Supporting shipper: Dan River Floor Covering Division, P.O. Box 167/I-85 Plant, Greenville, SC 29602.

Note.—Common control may be involved.

MC 107012 (Sub-II-65TA), filed July 22, 1980. Applicant: NORTH AMERICAN VAN LINES, INC., 5001 U.S. Hwy. 30 West, P.O. Box 988, Fort Wayne, IN 46801. Representative: Bruce W. Boyarko (same address as applicant). *Television chassis and component parts for televisions,* from the facilities of Zenith Radio Corp. at McAllen and Brownsville, TX to Chicago, IL and Springfield, MO for 270 days. An underlying ETA seeks 120 days authority. Supporting shipper: Zenith Radio Corp., 1900 S. Austin Blvd., Chicago, IL 60639.

Note.—Common control may be involved.

MC 124212 (Sub-II-2TA), filed July 21, 1980. Applicant: MITCHELL TRANSPORT, INC., 6500 Pearl Rd., P.O. Box 30248, Cleveland, OH 44130. Representative: J. A. Kundtz, 1100 National City Bank Bldg., Cleveland, OH 44114. *Fly ash, in bulk,* from Minneapolis, MN to Mason City, IA for 270 days. Supporting shipper: Lehigh Portland Cement Co., 718 Hamilton Mall, P.O. Box 1882, Allentown, PA 18105.

MC 146348 (Sub-2-2TA), filed July 21, 1980. Applicant: M. T. SERVICES, INC., P.O. Box 18402, Baltimore, MD 21237. Representative: Raymond P. Keigher, 1400 Gerard St., Rockville, MD 20650. *Contract: Irregular: such commodities as are dealt in or sold by book distributors (except in bulk),* between Westminster, MD, on the one hand, and, on the other, Baltimore and Savage, MD, Saddle Brook, NJ, Binghampton and Fenton, NY, New York, NY and points in its commercial zone, Dunmore, PA, and Harrisonburg, VA, for 270 days under continuing contract(s) with Random House, Inc., of Westminster, MD. Supporting shippers: Random House, Inc., 400 Hahn Rd., Westminster, MD 21157.

MC 4080 (Sub-II-1TA), filed July 25, 1980. Applicant: BRICK HAULER'S, INC., 403 Holland Lane, Alexandria, VA 22313. Representative: Gerald K. Gimmel, Suite 145, 4 Professional Dr., Gaithersburg, MD 20760. *Contract,* irregular: *Mortar and cement, in bags,* from Northhampton and Lehigh Counties, PA to Alexandria, VA and points in Arlington and Fairfax Counties, VA for 270 days. An underlying ETA seeks 120 days authority. Supporting shipper: United Materials & Services, Inc., 7117 Wimsatt Rd., Springfield, VA 22151.

MC 123744 (Sub-II-9TA), filed July 25, 1980. Applicant: BUTLER TRUCKING CO., P.O. Box 88, Woodland, PA 16881. Representative: Dwight L. Koerber, Jr., P.O. Box 1320, 110 N. 2nd St., Clearfield, PA 16830. *Refractories, refractory materials, and iron and steel articles,* Between Chicago, IL and its commercial zone on the one hand, and, on the other, points in OH and PA, for 270 days. An underlying ETA seeks 120 days authority. Shipper: Resco Products, Inc., P.O. Box 1110, Clearfied, PA 16830.

MC 102616 (Sub-II-15TA), filed July 25, 1980. Applicant: COASTAL TANK LINES, INC., 250 N. Cleveland-Massillon Rd., Akron, OH 44313. Representative: W. M. Kiefaber (same address as applicant). *Petroleum and Petroleum Products, in bulk, in tank vehicles,* from Erie, PA to points in OH, for 270 days. Supporting shipper: United Refining Company, Warren, PA 16365.

The following applications were filed in Region 3. Send protests to ICC; Regional Authority Center, P.O. Box 7600, Atlanta, GA 30357.

MC 119777 (Sub-3-14TA), filed July 25, 1980. Applicant: LIGON SPECIALIZED HAULER, INC., Highway 85—East, Madisonville, KY 42431. Representative: Carl U. Hurst, P.O. Drawer "L", Madisonville, KY 42431. *Particleboard, fibreboard and accessories used in the installation thereof,* from Meridian, MS to points in AL, AR, FL, GA, IL, IN, IA, KS, KY, LA, MI, MO, NC, SC, OH, OK, PA, TN, TX, VA, and WV. Supporting shipper: Cant Strip Corporation of America, P.O. Box 3521, Meridian, MS 39301.

MC 136123 (Sub-3-6TA), filed July 25, 1980. Applicant: MEAT DISPATCH, INC., P.O. Box 1058, Palmetto, FL 33561. Representative: William L. Beasley (same address as above). *Floor tile and flooring accessories,* between Houston, TX and points in the U.S. in and east of MN, IA, MO, AR, and LA. Supporting shipper: Uvalde Rock Asphalt Company, P.O. Box 34030, San Antonio, TX, 78233.

MC 120910 (Sub-3-5TA), filed July 25, 1980. Applicant: SERVICE EXPRESS, INC., P.O. Box 1009 Tuscaloosa, AL 35401. Representative: Donald B. Sweeney, Jr., 603 Frank Nelson Building, Birmingham, AL 35203. *(1) Metallic ores, nonmetallic minerals (except fuels), primary metal products, fabricated metal products, machinery and supplies; waste or scrap materials; metal articles, pipe, gaskets, casings, fittings, breechings, valves, hydrants, boxes, tanks and vessels; (2) materials, equipment, parts and supplies used in connection with the manufacture, fabrication, distribution or installation of commodites in (1) above.* Restricted against commodites in bulk in tank vehicles. Between Tuscaloosa County, AL, on the one hand, and, on the other, all points in the United States (except AK and HI). Supporting shipper: Reliance Grating, Inc., P.O. Drawer 10, Cottondale, AL (35453), Blue River Alloy, Inc., P.O. Box 2322, 2600 Kaulton Road, Tuscaloosa, AL (35401), McAbee Construction, Inc., P.O. Box 1429, 5724 21st Street, Tuscaloosa, AL (35401), Southern Tube Company, Inc., P.O. Box 2214, Tuscaloosa, AL (35403), Southern Heat Exchanger Corporation, Box 2400, Tuscaloosa, AL (35401).

MC 75840, (Sub-3-8TA), filed July 24, 1980. Applicant: MALONE FREIGHT LINES, INC., P.O. Box 11103, Birmingham, AL 35202. Representative: Frank D. Hall, Postell & Hall, P.C., Suite 713, 3384 Peachtree Rd., N.E., Atlanta, GA. 30326. *Chemicals, NOI; plastic materials; liquid, NOI; synthetic liquid; metallic soaps of fatty acids; fatty acids esters of animal fats; adjuvant; adhesives, resins; stickers or spreaders; cleaning, scouring or washing compounds, liquid and dry; lubricating oil; acids, NOI; paints, NOI; dryees paint or varnish; wood preservatives, liquid, NOI; disinfectants, O/T medicinal, NOI,* Between Houston, TX, on the one hand, and, on the other, points in AL, AR, FL, DE, GA, KY, LA, MD, MS, NJ, NY, NC, OH, PA, SC, TN, VA & WV. Supporting Shipper: Witco Chemical Corporation, P.O. Box 308, Gretna, LA, 70054.

MC 12164 (Sub-3-22TA), filed July 24, 1980. Applicant: HORNADY TRUCK LINE, INC., P.O. Box 846, Monroeville, AL 36460. Representative: W. E. Grant, 1702 First Avenue South, Birmingham, AL 35233. (a) *Treated and untreated forest products, lumber, posts, poles, piling, timber, cross-ties, particle board, insulation board, insulation sheets, gypsum wallboard, plywood, laminated wood products, veneer;* and (b) *materials, equipment and supplies* (except commodities in bulk, in tank vehicles) used in the production and distribution of those products listed in (a) above, between points in the US lying in and east of ND, SD, NE, KS, OK, and TX. Restriction: Restricted to transportation of shipments originating at or destined to facilities of Weyerhaeuser Company, subsidiaries of Weyerhaeuser Company and suppliers of Weyerhaeuser Company, when making shipments for Weyerhaeuser Company and its subsidiaries. Supporting shipper: Weyerhaeuser Company, P.O. Box 2288, Columbus, MS (39701).

MC 114804 (Sub-3-7TA), filed July 25, 1980. Applicant: CAUDELL

TRANSPORT, INC., P.O. Drawer I, State Farmers Market #33, Forest Park, GA 30050. Representative: Frank D. Hall, Postell & Hall, P.C., Suite 713, 3384 Peachtree Road, NE, Atlanta, GA 30050. *Meat, meat products, meat byproducts and articles distributed by meat packinghouses as described in Sections A and C of Appendix I to the report in descriptions in motor carrier certificates, 61, M.C.C. 209 and 766 (except hides and commodities in bulk),* from Palestine, TX to points in AL, AR, FL, GA, IL, IN, KY, LA, MO, MS, NC, OH, PA, SC, TN, VA and WV. Supporting shipper: Vernon Calhoun Packing Company, P.O. Box 709, Palestine, TX 75801.

MC 114604 (Sub-3-8TA), filed July 25, 1980. Applicant: CAUDELL TRANSPORT, INC., P.O. Drawer I, State Farmers Market #33, Forest Park, GA 30050. Representative: Frank D. Hall, Postell & Hall, P.C., Suite 713, 3384 Peachtree Road, NE, Atlanta, GA 30326. *Malt beverages and related advertising materials* (except in bulk), from Perrysburg, OH and Detroit, MI to MO, IL, IN, OH, PA, KY, WV, AR, TN, NC, LA, MS, AL, GA, SC, and FL. Supporting shipper: Stroh's, Inc., 1 Stroh's Drive, Detroit, MI 48226.

MC 111545 (Sub-3-6TA), filed July 25, 1980. Applicant: HOME TRANSPORTATION COMPANY, INC., 1425 Franklin Road, S.E., Marietta, GA 30067. Representative: J. Michael May, P.O. Box 6426, Station A, Marietta, GA 30065. *Pipe,* from the facilities of Midwesco, Inc. at Lebanon, TN, to points in CA. Supporting Shipper: Midwesco, Inc., 1310 Quarles Drive, Lebanon, TN 37087.

MC 146281 (Sub-3-10TA), filed July 25, 1980. Applicant: SILVER FLEET EXPRESS, INC., 4521 Rutledge Pike, P.O. Box 6089, Knoxville, TN 37194. Representative: Henry E. Seaton, 929 Pennsylvania Bldg., 425 13th Street, N.W., Washington, DC 20004. *Foodstuffs* (except commodities in bulk), between the facilities of White Lily Flour, at or near Knoxville, TN, on the one hand, and, on the other, points in AL, MS, LA, GA, KY, NC, SC. Supporting Shipper(s): White Lily Flour, P.O. Box 871, Knoxville, TN 37901.

MC 114604 (Sub-3-9TA), filed July 25, 1980. Applicant: CAUDELL TRANSPORT, INC., P.O. Drawer I, State Farmers Market #33, Forest Park, GA 30050. Representative: Frank D. Hall, Postell & Hall, P.C., Suite 713, 3384 Peachtree Road, NE., Atlanta, GA 30050. *Canned and bottled foodstuffs, and pepper pulp in drums,* from Cade and Lozes, LA to points in IL, IN, MI, OH, WI, MO and KY. Supporting shipper: Bruce Foods Corporation, P.O. Drawer 1030, New Iberia, LA 70560.

MC 52704 (Sub-3-7TA), filed July 24, 1980. Applicant: GLENN McCLENDON TRUCKING COMPANY., INC., P.O. Drawer "H", LaFayette, AL 36862. Representatives: Archie B. Culbreth, John P. Tucker, Jr., Suite 202, 2200 Century Parkway, Atlanta, GA 30345. (1) *Carbonated beverages,* (a) between points in AL, FL, GA, NC and SC and (b) between Kansas City, KS and St. Louis, MO, on the one hand, and, on the other, points in AL, GA, FL, NC and SC; and (2) *Materials, equipment and supplies,* used in the manufacture and distribution of carbonated beverages from points in the United States (except AK and HI) to points in AL, FL, GA, NC and SC. Supporting Shippers: King Cola Southeast Limited, 2810 New Spring Road, Suite 112, Atlanta, GA 30339 and King Cola Carolinas Corporation, 2800 Bush River Road, Columbia, SC 29210.

MC 149229 (Sub-2TA), filed January 22, 1980. Republication—Originally published in Federal Register of 03-19-80 page 17672 volume 45, No. 55. Applicant: JOYCLIFF TRUCK LEASING COMPANY, INC., 2010 Joycliff Circle, Macon, GA 30201. Representative: Clyde W. Carver, P.O. Box 720434, Atlanta, GA 30328. *Contract* carrier, over irregular routes, (1) *Articles dealt in by janitorial supply houses (except in bulk); and (2) materials and supplies used in the manufacture of janitorial supplies (except in bulk),* (1) from Macon, GA to points in AL, AR, FL, IN, KY, LA, MS, NY, NC, PA, SC, TN, TX, VA and WV and (2) from destination states named in (1) above to Macon, GA. Under a continuing contract with Southern Chemical Products Company, Supporting shipper: Southern Chemical Products Company, Inc., 430 Lower boundary Street, Macon, GA 31202.

MC 149218 (Sub-3TA), filed January 17, 1980. Republication—Originally published in Federal Register of 03-19-80 page 17672 volume 45, No. 55. Applicant: SUNBELT EXPRESS, INC., 118 Hamilton Circle, Bremen, GA 30110. Representative: John J. Capo, P.O. Box 720434, Atlanta, GA 30328. (1) *Containers, container closures, container components and packaging products and* (2) *machinery materials and supplies used in the manufacture, sale and distribution of (1) above (except in bulk),* (1) from Tallapoosa, GA to points in AL, AR, FL, GA, IL, IN, KY, LA, MO, MS, NC, OH, SC, TN, VA and WV; and, (2) from destination states named in (1) above to Tallapoosa, GA. Supporting shipper: Southern Can Company, 100 Stoffell Drive, Tallapoose, GA.

MC 85970 (Sub-3-9TA), filed July 7, 1980. Republication—Originally published in Federal Register of 07-16-80 page 47741 volume 45, No. 138. Applicant: SARTAIN TRUCK LINE, INC., 1625 Hornbrook St., Dyersburg, TN 38064. Representative: Warren A. Goff, 2008 Clark Tower, 5100 Poplar Ave., Memphis, TN 38137. *Common* carrier: Regular: *General commodities, except those of unusual value, Classes A and B explosives, household goods as defined by the Commission, commodities in bulk, and articles requiring special equipment,* between Union City, TN and Fulton, KY; from Union City, TN, over U.S. Highway 51 to Fulton, KY and return over the same route, serving all intermediate points. Applicant intends to interline at Memphis and Nashville, TN, and St. Louis, MO. Applicant intends to tack at Union City, TN. There are 7 statements in support to this application which may be examined at the ICC Regional office in Atlanta, GA.

MC 151171 (Sub-3-1TA), filed July 7, 1980. Republication—Originally published in Federal Register of 7-16-80 page 47739 volume 45, No. 138. Applicant: CIRCLE DELIVERY SERVICE, INC., 2008 Clark Tower, Memphis, TN 38137. Representative: Dennis D. Kirk, 915 Pennsylvania Bldg., 425 13th St., NW., Washington, DC 2005. *General Commodities, with the usual exceptions,* between points in Davidson County, TN, on the one hand, and, on the other, points in Lake County, IN; Cooke, DuPage, Kane, Lake and Will Counties, IL.

Note.—Interlining is requested at Nashville, TN and Chicago, IL. Common control may be involved.

Supporting shippers: There are 22 statements of support attached to this application which may be examined at the ICC Regional Office in Atlanta, GA.

The following applications were filed in region 5. Send protests to: Consumer Assistance Center, Interstate Commerce Commission, Post Office Box 17150, Fort Worth, TX 76102.

MC 10457 (Sub-5-2TA), filed July 28, 1980. Applicant: BURGGRABE TRUCK LINES, INC., Old Highway 40, Warrenton, MO 63383. Representative: Kerry L. Hart (same address as applicant). (1) *Vinyl and leather manufactured goods, and* (2) *materials, equipment and supplies used in the manufacture and distribution of the commodities in (1),* between Washington, MO, on the one hand, and, on the other, points in the commercial zones of St. Louis, MO, E. St. Louis, IL, Kansas City, MO, and Kansas City, KS. Supporting shipper: Hazel Company,

1200 S. Stafford St., Washington, MO 63090.

MC 60066 (Sub-5-3TA), filed July 28, 1980. Applicant: BEE LINE MOTOR FREIGHT, INC., 1804 Paul Street, Omaha, NE 68102. Representative: Donald L. Stern, Suite 610, 7171 Mercy Road, Omaha, NE 68106. *Such commodities as are dealt in by manufacturers of medical, surgical, and hospital supplies,* between points in Custer, Platte, and Phelps Counties, NE; Litchfield County, CT; Cook County, IL; De Kalb County, GA; Queens County, NY; Morris, Middlesex, Somerset and Hudson Counties, NJ, on the one hand, and, on the other, points in the United States except HI. Supporting shipper: Becton Dickinson and Company, Rutherford, NJ 07070.

MC 88368 (Sub-5-7TA), filed July 28, 1980. Applicant: CARTWRIGHT VAN LINES, INC., 11901 Cartwright Avenue, Grandview, MO 64030. Representative: Charles Ephraim, 406 World Center Building, 918-16th Street, N.W., Washington, DC 20006. *Household goods as defined by the Commission* between points in the United States (including HI and excluding AK). The application is based upon the elimination of gateways and the promotion of efficient and economical operations. Supporting shipper: There is no supporting shipper.

MC 104523 (Sub-5-1TA), filed July 28, 1980. Applicant: HUSTON TRUCK LINE, INC., P.O. Box 427, Seward, NE 68434. Representative: John T. Wirth, 717—17th Street, Suite 2600, Denver, CO 80202. *Bentonite, bentonite clay and drilling mud compounds,* from the facilities of Wyo-Ben, Inc. at Greybull and Lovell, WY to points in KS, NE, OK and AR. Supporting shipper: Wyo-Ben, Inc., 1241 North 28th Street, P.O. Box 1979, Billings, MT 59103.

MC 113908 (Sub-5-16TA), filed July 28, 1980. Applicant: ERICKSON TRANSPORT CORP., 2255 North Packer Road, P.O. Box 10068 G. S., Springfield, MO 65804. Representative: B. B. Whitehead (same address as applicant). *Vegetable oil, vegetable oil products, by-products, and blends of vegetable oil, vegetable oil products, and by-products; non-exempt farm products, non-exempt food or kindred products, chemicals or allied products, rubber or miscellaneous plastics products, hazardous materials and general commodities (except household goods as defined by the commission and class A and B explosives),* between (Stuttgart) Arkansas County, and (Helena) Phillips County, AR, on the one hand, and, on the other, points in the United States. Supporting shipper: Riceland Foods, Inc., P.O. Box 927, Stuttgart, AR 72160.

MC 119399 (Sub-5-23TA), filed July 28, 1980. Applicant: CONTRACT FREIGHTERS, INC., P.O. Box 1375, 2900 Davis Boulevard, Joplin, MO 64801. Representative: Thomas P. O'Hara (address same as applicant). *Wines and Spirits* from Fresno, Los Angeles, Kern, Madera, Napa, San Bernardino, San Francisco, San Mateo, Santa Clara, Sonoma and Stanislaus Counties, CA to points in OK. Supporting shipper: Dixie Liquors Company, McAlester, OK.

MC 124711 (Sub-5-3TA), filed July 28, 1980. Applicant: BECKER CORPORATION, P.O. Box 1050, El Dorado, KS 67042. Representative: Rod Parker (same as applicant). *Aviation Gasoline,* from Dallas, TX and Ft. Worth, TX to Hutchinson, KS and McPherson, KS. Supporting shipper: Century Oil Co., Inc., 1129 West 4th, Hutchinson, KS 67501.

MC 126118 (Sub-5-23TA), filed July 28, 1980. Applicant: CRETE CARRIER CORPORATION, P.O. Box 81228, Lincoln, NE 68501. Representative: David R. Parker, P.O. Box 81228, Lincoln, NE 68501. *Such commodities as are dealt in or used by manufacturers and distributors of furniture,* from points in AR, GA, MS, NC, SC and VA to points in TX. Supporting shipper: Viking Freight Service, Inc., Robert W. Brimmer, President, 9144 King Arthur, Dallas, TX 75247.

MC 128273 (Sub-5-16TA), filed July 28, 1980. Applicant: MIDWESTERN DISTRIBUTION, INC., P.O. Box 189, Fort Scott, KS 66701. Representative: Elden Corban, P.O. Box 189, Fort Scott, KS 66701. *Such commodities as are used or dealt in by refiners, manufacturers and distributors of petroleum and plastic products* from points in Galveston, Chambers, Liberty, Montgomery, Harris, Fort Bend and Brazoria Counties, TX, to points in the United States (except AK, HI and TX). *Restricted against the transportation of commodities in bulk, in tank vehicles, and commodities which, because of size or weight require the use of special equipment.* Supporting shipper(s): Southwest Chemical & Plastics Company, P.O. Drawer 478, Seabrook, TX 77586, Witco Chemical Corporation, P.O. Box 308, Gretna, LA 70054, and Penreco Division of Pennzoil, 106 South Main Street, Butler, PA 16001.

MC 128273 (Sub-5-17TA), filed July 28, 1980. Applicant: MIDWESTERN DISTRIBUTION, INC., P.O. Box 189, Fort Scott, KS 66701. Representative: Harry Ross, 58 South Main Street, Winchester, KY 40391. (1) *Containers, container ends, and closures,* (2) *commodities manufactured or distributed by manufacturers and distributors of containers when moving in mixed loads with containers, and* (3) *materials, equipment, and supplies used in the manufacture and distribution of containers, container ends, and closures* between all points in the United States (except AK and HI), *restricted against the transportation of commodities in bulk.* Supporting shippers: Stafos Farms, Inc., 6235 Kansas Avenue, Kansas City, KS 66111; Shurfine-Central Corporation, 2100 North Mannheim Road, Northlake, IL 60164; Terminal Bag Co., Inc., P.O. Box 47, Yulee, FL 32097; Keyes Fibre, Upper College Avenue, Waterville, ME 04901; Cole Harford Company, 110 West 14th Avenue, North Kansas City, MO 64116; Ball Corporation, 345 South High Street, Muncie, IN 47302; International Paper Company, 220 East 42nd Street, New York, NY 10017; Anchor Hocking Corporation, 109 N. Broad Street, Lancaster, OH 43130; Potlatch Corporation, P.O. Box 1016, Lewiston, ID 83501; Menasha Corporation, P.O. Box 367, Neenah, WI 54956; and Olinkraft, Inc., P.O. Box 488, West Monroe, LA 71291.

MC 134405 (Sub-5-8TA), filed July 28, 1980. Applicant: BACON TRANSPORT COMPANY, P.O. Box 1134, Ardmore, OK 73401. Representative: Wilburn L. Williamson, Suite 615-East, The Oil Center, 2601 Northwest Expressway, Oklahoma City, OK 73112. *Sodium sulfide solution,* from Wynnewood, OK to Pine Bluff, AR. Supporting shipper: Kerr-McGee Refining Corporation, Kerr McGee Center, P.O. Box 25861, Oklahoma City, OK.

MC 134783 (Sub-5-1TA), filed July 28, 1980. Applicant: DIRECT SERVICE, INC., 940 East 66th Street, P.O. Box 2491, Lubbock, TX 79408. Representative: Charles M. Williams, Kimball, Williams & Wolfe, P.C., 350 Capitol Life, 1600 Sherman Street, Denver CO 80203. *(1) Such commodities as are dealt in by or used by manufacturers and distributors of toilet preparations, beauty aids, hair grooming and conditioning aids, cosmetics, shaving cream, washing compounds, cleansing compounds, deodorizers, drugs, and store displays, (except in bulk) (2) materials, equipment and supplies used in the installation of store displays (except in bulk),* (A) from the facilities of Noxell Corporation at or near Cockeysville, MD; the facilities of Peterson Puritan, Inc. at or near Berkeley, RI; and the facilities of Howard Display, Inc. at or near New York, NY, to point in TN, OK, AR, MN, ND, SD, TX, NM, CO, WY, MT, ID, UT, NV, AZ, CA, OR and WA; (B) between the facilities of Noxell Corporation at or near Cockeysville, MD; the facilities of

Peterson Puritan, Inc., at or near Berkeley, RI and the facilities of Howard Display, Inc. at or near New York, NY. Supporting shipper: Noxell Corporation, P.O. Box 1799, Baltimore, MD 21203.

MC 136008 (Sub-5-6TA), filed July 28, 1980. Applicant: JOE BROWN COMPANY, INC., 20 Third Street N.E., Ardmore, OK 73401. Representative: John Tipsword, P.O. Box 6210, Moore, OK 73153. *Asphalt in Bulk on shipper-owned trailers,* from Moore County TX to Seward County KS. Supporting shipper: Herzog Contracting Corporation, 1900 Garfield Avenue, St. Joseph, MO 64503.

MC 140440 (Sub-5-1), filed July 28, 1980. Applicant: DAVIS TRUCK SERVICE, INC., Route 2, Box 43, Jeanerette, LA 70544. Representative: James M. Field and C. Randall Loewen, Gary & Field, 5420 Corporate Blvd., Suite 302, Baton Rouge, LA 70808. *General commodities in cargo containers, empty cargo containers, supplies, and heavy and cumbersome equipment and machinery not transportable in containers, and aluminum plate, all having a previous or subsequent move in interstate commerce,* from and between facilities of Kaiser Aluminum and Chemical Corporation at the LA cities of Baton Rouge, Gramercy, Chalmette, and the Parish of Lafayette, La. Supporting shipper: Kaiser Aluminum and Chemical Corporation, Suite 615, 10001 Lake Forest Blvd., New Orleans, LA 70127.

MC 140665 (Sub-5-25TA), filed July 28, 1980. Applicant: PRIME, INC., P.O. Box 4208, Springfield, MO 65804. Representative: H. J. Anderson, P.O. Box 4208, Springfield, MO 65804. *General commodities, except commodities in bulk.* (A) From the facilities utilized by Terminal Freight Co-Operative Association, Inc., at or near Cleveland, OH to Los Angeles, CA; Portland, Or and Seattle, WA, and (B) From the facilities utilized by Terminal Freight Co-Operative Association, Inc., Los Angeles, CA to Seattle, WA. Supporting shipper: Terminal Freight Co-Operative Association, Inc., 1430 Branding Lane, Downers Grove, IL 60515.

MC 143462 (Sub-5-25TA), filed July 28, 1980. Applicant: ERWIN TRUCKING, INC., 9100 "F" Street, Omaha, NE 68127. Representative: Greg A. Dickinson, Suite 610, 7171 Mercy Road, Omaha, NE 68106. Contract; Irregular; *Foodstuffs, pet foods, and materials and supplies used in the manufacture, sale and distribution of food-stuffs and pet foods (except commodities in bulk),* between the facilities of Campbell Soup Company, Inc. and subsidiaries located in and east of ND, SD, NE, KS, OK, and TX. Supporting shipper: Campbell Soup Company, Inc., Campbell Place, Camden, NJ 08101.

MC 144203 (Sub-5-4TA), filed July 28, 1980. Applicant: HERMAN BROS., INC., P.O. 189, Omaha, NE 69101. Representative: William A. Gray, 2310 Grant Bldg., Pittsburgh, PA 15219. Contract, irreg., *Liquid nitrogen, liquid oxygen, liquid argon, and compressed gas, in bulk, in tank vehicles,* between the facilites of M G Burdett Gas Products Company at or near St. Marys and Reading, PA.; and Hopewell and Richmond, VA, on the one hand, and, on the other, points in the U.S. in and east of MI, IN, KY, TN, and MS, under a continuing contract(s) with M G Burdett Gas Products Company of Norristown, PA. Supporting shipper: M G Burdett Gas Products Company, 1 Schuylkill Avenue, Norristown, PA 19401.

MC 146078 (Sub-5-13TA), filed July 28, 1980. Applicant: CAL-ARK, INC., 854 Moline, P.O. Box 610, Malvern, AR 72104. Representative: John C. Everett, 140 E. Buchanan, P.O. Box A, Prairie Grove, AR 72753. *Dockboard, iron and steel, dock levelers, and rubber bump blocks, and material and equipment used in the manufacture, assembly and distribution of such items,* between the plant site facilites of DLM, Inc. at Malvern, AR, on the one hand, and, on the other, all points and places in Chicago, IL; Denver, CO; PA, NY, and TX. Supporting shipper: DLM, Inc., P.O. Box 37, Malvern, AR 72104.

MC 146360 (Sub-5-8TA), filed July 28, 1980. Applicant: FLOYD SMITH, JR. TRUCKING INC., 4415 Highline Blvd., Suite 107, Oklahoma City, OK 73148. Representative: Timothy R. Stivers, P.O. Box 162, Boise, ID 83701. *Dehydrated Potatoes,* from the facilities of Idaho Fresh-Pak, Inc. at or near Lewisville, ID, to points in the U.S. (except AK and HI) and Canada. Supporting shipper: Idaho Fresh-Pak, Inc., P.O. Box 130, Lewisville, ID 83431.

MC 151118 (Sub-5-3TA), filed July 28, 1980. Applicant: MDR CARTAGE, INC., 516 West Johnson, Jonesboro, AR 72401. Representative: Douglas C. Wynn, P.O. Box 1295, Greenville, MS 38701. (1) *Footwear and* (2) *equipment, materials and supplies used in the manufacture, sale and distribution of footwear (except commodities in bulk and those requiring special equipment)* between the facilities of Frolic Footwear, Division of Wolverine Worldwide, Inc., at or near Jonesboro, Craighead County, AR on the one hand, and, on the other, points in the U.S. in and east of WI, IL, MO, TN, MS, and LA. Supporting shipper: Frolic Footwear, Division of Wolverine Worldwide, Inc., 1030 Aggie Road, Jonesboro, AR 72401.

Note.—Dual operations may be involved.

MC 151378 (Sub-5-1TA), filed July 28, 1980. Applicant: BIG B TRUCK LINES, INC., P.O. Box 67, Jonesburg, MO 63351. Representative: John Clark (same address Applicant) *Copper wire bars, aluminum wire bars, and copper and aluminum ingots,* between Truesdale, MO, on the one hand, and, on the other, St. Louis, MO, E. St. Louis, IL, Kansas City, MO and Kansas City, KS and points in their commercial zones. Supporting shipper(s): H. and R. Metals Co., Truesdale, MO 63383.

MC 151379 (Sub-5-1TA), filed July 28, 1980. Applicant: T. J. KERVIN TRUCKING COMPANY, P.O. Box 48, Winnfield, LA 71483. Representative: Fletcher W. Cochran, 1338 Gause Blvd., Suite 245, P.O. Box 741, Slidell, LA 70459. Contract; Irregular: *Lumber, lumber products and forest products* from the plant site of Crown Zellerbach Corporation, Holden, LA, to all points in the states of AL, AR, FL, GA, TN, TX, MS, MO, IL, IN, MI, PA, OH, NY, MD, WV, NC, SC, WI, NE, KS, NM, AZ, CO, and MN. Supporting shipper: Crown Zellerback Corporation, P.O. Box 1060, Bogalusa, LA 70427.

MC 151381 (Sub-5-1TA), filed July 28, 1980. Applicant: SUNBELT FREIGHT, a Division of SUNBELT HOLDING CORPORATION, 5520 West Channel Road, Catoosa, 74015. Representative: Fred Rahal, Jr., Suite 305, Reunion Center, 9 East Fourth Street, Tulsa, OK 74103. *Iron and steel articles* from the Port of Catoosa (near Tulsa), OK, to points in AR, CO, KS, LA, MO, NM, OK and TX. Supporting shippers:

Steel Pipe & Supply Company, Inc., P.O. Box 703, 205 Osage Street, Manhattan, KS 66502;

American Pipe Threading & Service, Inc., 1085 Fort Gibson Road, Catoosa, OK 74015;

Petrothread, P.O. Box 35591, Tulsa, OK 74135.

MC 151383 (Sub-5-1TA), filed July 28, 1980. Applicant: NICKELL TRUCKING CO., 5018 East Pine Street, Tulsa, OK 74115. Representative: Fred Rahal, Jr., Rahal & Anderson, Suite 305, Reunion Center, 9 East Fourth Street, Tulsa, OK 74103. Contract, Irregular; (A) *Steel articles and materials, equipment and supplies used in the production and distribution of steel articles,* between the facilities of John A. Gulick, Inc. at Tulsa, OK on the one hand, and, on the other, points in MO, KS, AR, OK, TX, NM, CO, CA, AZ, WY, IL, AL, MS, PA and OH; (B)(1) *Louvers, dampers, shutters, iron and steel articles, gas turbine silencers, and* (2) *materials and*

supplies used in the production of the commodities named in part (1) above, between the facilities of The Dunlap Manufacturing Company at Tulsa, OK, on the one hand, and, on the other, points in TX, LA, KS, CO, WY, OH, IL, WI, MN, IN, MT, OR, WA, CA, NM, FL, MS, AL, NJ and MD; and (C)(1) *Paint boothes, paint ovens, washer assemblies, dip tanks, incinerators, paint finishing systems, with parts and accessories and (2) materials and supplies used in the production and erection of the commodities named in part (1) above,* from the facilities of Schweitzer Industrial Corporation at Madison Heights, MI; Indianapolis, IN; and Tulsa, OK to Shreveport, LA; Kansas City, KS; Kansas City, MO; Chicago, IL; Bowling Green, KY; Indianapolis, IN; Corsicana, TX: Port Huron, MI; Granite City, IL; Burlington, IA; Long Beach, CA; San Jose, CA; Los Angeles, CA; Seattle, WA; Denton, TX; Davenport, IA; Moline, IL; Lorain, OH; Tulsa, OK; Madison Heights, MI; Doraville, GA; Lima, OH and Moraine, OH. Supporting shippers:

John A. Gulick, Inc., P.O. Box 1665, Tulsa, OK 74101;

The Dunlap Manufacturing Company, P.O. Box 45226, Tulsa, OK 741435;

Schweitzer Industrial Corporation, P.O. Box 46, 32200 N. Avis Drive, Madison Heights, MI.

Republication

MC 117765 (Sub-5-7TA), filed May 27, 1980. Applicant: HAHN TRUCK LINE, INC., P.O. Box 75218, Oklahoma City, OK 73147. Representative: R. E. Hagan (same address as applicant). *Pitch, lignin, dry, in containers* from Appleton, WI to AL and MS. Supporting shipper: Baker Chemicals, Inc., 2801 S. Post Oak, Suite 258, Houston, TX 77056.

Agatha L. Mergenovich,

Secretary.

[FR Doc. 80-23651 Filed 8-5-80; 8:45 am]

BILLING CODE 7035-01-M

[Notice No. 42]

Motor Carrier Temporary Authority Applications

July 31, 1980.

The following are notices of filing of applications for temporary authority under Section 210a(a) of the Interstate Commerce Act provided for under the provisions of 49 CFR 1131.3. These rules provide that an original and six (6) copies of protests to an application may be filed with the field official named in the Federal Register publication no later than the 15th calendar day after the date the notice of the filing of the application is published in the Federal Register. One copy of the protest must be served on the applicant, or its authorized representative, if any, and the protestant must certify that such service has been made. The protest must identify the operating authority upon which it is predicated, specifying the "MC" docket and "Sub" number and quoting the particular portion of authority upon which it relies. Also, the protestant shall specify the service it can and will provide and the amount and type of equipment it will make available for use in connection with the service contemplated by the TA application. The weight accorded a protest shall be governed by the completeness and pertinence of the protestant's information.

Except as otherwise specifically noted, each applicant states that there will be no significant effect on the quality of the human environment resulting from approval of its application.

A copy of the application is on file, and can be examined at the Office of the Secretary, Interstate Commerce Commission, Washington, D.C., and also in the ICC Field Office to which protests are to be transmitted.

Note.—All applications seek authority to operate as a common carrier over irregular routes except as otherwise noted.

Motor Carriers of Property

MC 56679 (Sub-158TA), filed December 5, 1979, and published in the Federal Register issue of February 19, 1980, and republished as corrected this issue. Applicant: BROWN TRANSPORT CORP., 352 University Avenue, SW, Atlanta, GA 30310. Representative: Leonard S. Cassell (same as applicant). Common carrier, regular routes, transporting *general commodities, with usual exceptions,* (1) between Dothan, AL and Memphis, TN serving points within fifteen (15) miles of Memphis, TN; from Dothan over US Hwy 231 to junction US HWY 31, thence over US Hwy 31 junction MS Hwy 72, thence over US Hwy 72 to Memphis, TN. (2) Between Atlanta, GA and Birmingham, AL; from Birmingham over Interstate Hwy 20 to Atlanta, GA. (3) Between Phenix City, AL and Montgomery, AL; from Phenix City over US Hwy 80 to Montgomery, AL. (4) Between Birmingham, AL and Memphis, TN; from Birmingham, AL over US Hwy 78 to Memphis, TN, and (5) between Montgomery, AL and Tupelo, MS; from Montgomery, AL, over US Hwy 82 to junction US Hwy 45, thence over US Hwy 45 to Tupelo, MS, serving Tupelo for purposes of joinder only. Serving all points in AL as intermediate or off-route points, for 180 days. An underlying ETA seeks 90-day authority. Carrier requests authority to tack the authority sought with its existing operating authority. Applicant requests to interline with other carriers at Birmingham, Montgomery, and Dothan, AL; Memphis, TN, and Atlanta, GA. Supporting shipper(s): There are 60 statements of support. Send protests to: Sara K. Davis, ICC, 1252 W. Peachtree St., N.W., Room 300, Atlanta, GA 30309. The purpose of this republication is to show tacking and interlining as previously omitted.

Agatha L. Mergenovich,

Secretary.

[FR Doc. 80-23661 Filed 8-5-80; 8:45 am]

BILLING CODE 7035-01-M

Railroad Operating Rights Application(s) Directly Related To Finance Proceedings

The following operating rights application is filed in connection with pending abandonment applications under Section 10903 of the Interstate Commerce Act.

An application filed on or after March 1, 1979, is governed by Special Rule 247 of the Commission's *General Rules of Practice* also but is subject to petitions to intervene either with or without leave. An original and one copy of the petition must be filed with the Commission within 30 days after date of publication. A petition for intervention must comply with Rule 247(k) which requires petitioner to demonstrate that it (1) holds operating authority permitting performance of any of the service which the applicant seeks authority to perform, (2) has the necessary equipment and facilities for performing that service, and (3) has performed service within the scope of the application either (a) for those supporting the application, or, (b) where the service is not limited to the facilities of particular shippers, from and to, or between, any of the involved points. Persons unable to intervene under Rule 247(k) may file a petition for leave to intervent under rule 247(l) setting forth in the specific grounds upon which it is made, including a detailed statement of petitioner's interest, the particular facts, matters and things relied upon, the extent to which petitioner's interest will be represented by other parties, the extent to which petitioner's participation may reasonably be expected to assist in the development of a sound record, and the extent to which participation by the petitioner would broaden the issues or delay the proceeding.

Verified statements in opposition should not be tendered at this time. A copy of the protest or petition to

intervene shall be served concurrently upon applicant's representative.

The applicant states that approval of its application will not significantly affect the quality of the human environment nor involve a major regulatory action under the Energy Policy and Conservation Act of 1975.

MC 86779 M1F and MC 86779 (Sub-33M1F), filed July 7, 1980. Illinois Central Gulf Railroad Company, a Delaware Corporation, has filed a Petition for Modification of Certificates—Tennessee and Kentucky and an accompanying Application seeking removal of a restriction in its certificates affecting the following highway routes: Between Beaver Dam and Ownesboro, Kentucky, serving the intermediate points of Fordsville, Deanefield, Whitesville and Philpot, Kentucky. Between Princeton, Kentucky and Nashville, Tennessee, via Hopkinsville, Kentucky and Clarksville, Tennessee, serving various intermediate points. The restrictions sought to be removed require the carrier not to serve any point not a station on the Illinois Central Gulf Railroad. The justification given for removal of this restriction is that, pursuant to a plan of coordination of rail lines in Western Kentucky and Tennessee, the carrier has filed applications in Dockets AB-43 (Sub. No. 68) and AB-43 (Sub. No. 70) to abandon its rail lines between Fordsville and Ownesboro, Kentucky and between Hopkinsville, Kentucky and Nashville, Tennessee. Comments or objections to these proposed modifications of certificates should be filed with the Secretary, Interstate Commerce Commission, Washington, D.C. 20423, with copy properly served upon counsel for Petitioner whose address is as follows: John H. Doeringer, Senior General Attorney, Illinois Central Gulf Railroad Company, 233 North Michigan Avenue, Chicago, Illinois 60601; giving reasons for the objection if any.

By the Comission.

Agatha L. Mergenovich,

Secretary.

[FR Doc. 80-23660 Filed 8-5-80; 8:45 am]

BILLING CODE 7035-01-M

[Docket No. AB-43 (Sub-No. 65F)]

Illinois Central Gulf Railroad Co., Abandonment Near Dwight, in Livingston County, IL; Findings

Notice is hereby given pursuant to 49 U.S.C. 10903 that by a Certificate and Decision decided July 18, 1980, a finding, which is administratively final, was made by the Commission, Review Board. Number 5, stating that the present and future public convenience and necessity permit the abandonment of a line of railroad known as the Dwight District, extending from railroad milepost 74.624 to milepost 75.424 near Dwight, IL, in Livingston County, IL, a distance of 0.8 miles, subject to the conditions for the protection of employees discussed in *Oregon Short Line R. Co.—Abandonment Goshen*, 360 I.C.C. 91 (1979), and further that ICG shall keep intact all of the right-of-way underlying the track, including all the bridges and culverts for a period of 120 days from the decided date of the certificate and decision to permit any state or local government agency or other interested party to negotiate the acquisition for public use of all or any portion of the right-of-way. A certificate of public convenience and necessity permitting abandonment was issued to the Illinois Central Gulf Railroad Company. Since no investigation was instituted, the requirement of Section 1121.38(a) of the Regulations that publication of notice of abandonment decisions in the Federal Register be made only after such a decision becomes administratively final was waived.

Upon receipt by the carrier of an actual offer of financial assistance, the carrier shall make available to the offeror the records, accounts, appraisals, working papers, and other documents used in preparing Exhibit I (Section 1121.45 of the Regulations). Such documents shall be made available during regular business hours at a time and place mutually agreeable during regular business hours at a time and place mutually agreeable to the parties.

The offer must be filed and served no later than 15 days after publication of this Notice. The offer, as filed, shall contain information required pursuant to Section 1121.38(b)(2) and (3) of the Regulations. If no such offer is received, the certificate of public convenience and necessity authorizing abandonment shall become effective September 22, 1980.

Agatha L. Mergenovich,

Secretary.

[FR Doc. 80-23657 Filed 8-5-80; 8:45 am]

BILLING CODE 7035-01-M

[Docket No. AB-36 (Sub-No. 11)]

Oregon Short Line Railroad Co., Abandonment, and Discontinuance of Service by Union Pacific Railroad Co., Between Newdale and Belt, ID; Findings

Notice is hereby given pursuant to 49 U.S.C. 10903 that by a Certificate and decision decided July 18, 1980, a finding, which is administratively final, was made by the Commission, Review Board Number 5, stating that the present and future public convenience and necessity permit the physical abandonment by the Oregon Short Line Railroad Company and discontinuance of service by Union Pacific Railroad Company over a portion of a line of railroad known as the East Belt Branch extending from railroad milepost 38.56 near Newdale to milepost 44.28 at Belt, a distance of 5.72 miles in Fremont County, ID, subject to the conditions for the protection of employees discussed in *Oregon Short Line R. Co.—Abandonment Goshen*, 360 I.C.C. 91 (1979), and further that applicants shall keep intact all of the right-of-way underlying the track, including all the bridges and culverts for a period of 120 days from the decided date of the certificate and decision to permit any state or local government agency or other interested party to negotiate the acquisition for public use of all or any portion of the right-of-way. A certificate of public convenience and necessity permitting abandonment was issued to the Oregon Short Line Railroad Company and Union Pacific Railroad Company. Since no investigation was instituted, the requirement of § 1121.38(a) of the Regulations that publication of notice of abandonment decisions in the Federal Register be made only after such a decision becomes administratively final was waived.

Upon receipt by the carrier of an actual offer of financial assistance, the carrier shall make available to the offeror the records, accounts, appraisals, working papers, and other documents used in preparing Exhibit I (Section 1121.45 of the Regulations). Such documents shall be made available during regular business hours at a time and place mutually agreeable during regular business hours at a time and place mutually agreeable to the parties.

The offer must be filed and served no later than 15 days after publication of this Notice. The offer, as filed shall contain information required pursuant to § 1121.38(b) (2) and (3) of the Regulations. If no such offer is received, the certificate of public convenience and necessity authorizing abandonment shall become effective, September 22, 1980.

Agatha L. Mergenovich,

Secretary.

[FR Doc. 80-23656 Filed 8-5-80; 8:45 am]

BILLING CODE 7035-01-M

INTERNATIONAL TRADE COMMISSION

Chains and Parts Thereof of Cast-Iron or Steel From Italy; Request for Public Comments on Termination of Countervailing Duty Investigation

AGENCY: U.S. International Trade Commission.

ACTION: Request for public comments on proposed termination of countervailing duty investigation under section 704(a) of the Tariff Act of 1930 and section 104(b) of the Trade Agreements Act of 1979, with regard to chains and parts thereof of cast-iron or steel from Italy.

EFFECTIVE DATE: August 6, 1980.

FOR FURTHER INFORMATION CONTACT: Mr. Lynn Featherstone, Office of Investigations, telephone number (202) 523-1376.

SUPPLEMENTAL INFORMATION: Section 104 of the Trade Agreements Act of 1979 contains the provisions for dealing with countervailing duty orders which had been issued under section 303 of the Tariff Act of 1930 as amended (19 U.S.C. 1303) prior to January 1, 1980. Where such orders are in effect, and have not been waived, section 104(b) requires the Commission to conduct an investigation upon the request of a government or a group of exporters of merchandise covered by the order, to determine whether an industry in the United States would be materially injured, threatened with material injury, or whether the establishment of such industry in the United States would be materially retarded if the order were to be revoked. Such investigation (similar to investigations carried under Title VII of the Trade Agreements Act) must be completed within three years of the date of its commencement (section 104(b)(3)).

On March 28, 1980, the Commission received a request from the Delegation of the Commission of European Communities for the review of the following countervailing duty order, *inter alia:*

Chains and parts thereof, of cast iron or steel from Italy. T.D. 77-249 (42 Fed. Reg. 54799, October 11, 1977).

The Commission has also been notified by counsel for the National Association of Chain Manufacturers, the original petitioner in the case leading to these countervailing duty orders, that the Association wishes to "withdraw its petition" with regard to chains and parts from Italy.

While there is no provision in the Trade Agreements Act of 1979, or in its legislative history, permitting termination of a transition case investigation, termination of a properly instituted countervailing duty investigation is permitted under section 704(a). That section directs the Commission to solicit public comment prior to termination and approve such termination only if it is in the public interest. Since termination is permitted under newly filed countervailing duty petitions, it should also be permitted in existing countervailing duty orders.

In light of the Commission's duty to consider the public interest, the Commission hereby requests written comments concerning the proposed termination of an investigation with regard to chains and parts thereof from Italy. These written comments must be filed with the Secretary of the Commission no later than September 5, 1980.

By order of the Commission.

Issued: July 30, 1980.

Kenneth R. Mason,

Secretary.

[FR Doc. 80-23699 Filed 8-5-80; 8:45 am]

BILLING CODE 7020-02-M

[Investigations Nos. 731-TA-27 and 28 (Preliminary)]

Menthol From Japan and the People's Republic of China

Determination

On the basis of the record in investigation No. 731-TA-27 (Preliminary), the Commission determines (Commissioners Bedell and Moore dissenting) [1] that there is no reasonable indication that an industry in the United States is being materially injured, or threatened with material injury, or that the establishment of an industry is being materially retarded by reason of imports from Japan of menthol, whether natural or synthetic, provided for in items 437.64 and 413.28 [2] of the Tariff Schedules of the United States (TSUS), which are allegedly sold or likely to be sold at less than fair value.

On the basis of the record in investigation No. 731-TA-28 (Preliminary), the Commission determines (Commissioner Stern dissenting) [3] that there is a reasonable indication that an industry in the United States is threatened with material injury [1] by reason of imports from the People's Republic of China of menthol, whether natural or synthetic, provided for in TSUS items 437.64 and 413.28,[2] which are allegedly sold or likely to be sold at less than fair value.

Background

On July 11, 1980, a petition was filed with the U.S. International Trade Commission and the U.S. Department of Commerce on behalf of Haarmann & Reimer Corporation, alleging that natural or synthetic menthol imported from Japan or from the People's Republic of China is being, or is likely to be, sold in the United States at less than fair value (LTFV). Accordingly, on June 16, 1980, the Commission instituted preliminary antidumping investigations Nos. 731-TA-27 and 28 (Preliminary) under section 733(a) of the Tariff Act of 1930 (19 U.S.C. 1673b(a)) to determine whether there is a reasonable indication that an industry in the United States is materially injured or is threatened with materials injury, or the establishment of an industry in the United States is materially retarded, by reason of imports of menthol, whether natural or synthetic, from Japan or from the People's Republic of China, as provided for in TSUS items 437.64 and 413.28. The statute directs that the Commission make its determination within 45 days of receipt of the petition, or in this case by July 28, 1980. On June 24, 1980, the Department of Commerce issued a notice announcing that it had found the petition to be properly filed within the meaning of its rules and that it was instituting an investigation. Notice to such effect was published in the Federal Register of July 2, 1980 (45 FR 44976). The product scope of the Commerce investigation is the same as that instituted by the Commission.

Notice of the institution of the Commission's investigations and of the public conference to be held in connection therewith was duly given by posting copies of the notice in the Office of the Secretary, U.S. International Trade Commission, Washington, D.C., and the Commission's office in New York City, and by publishing the notice in the Federal Register of June 19, 1980 (45 FR 41548). A public conference was held in Washington, D.C., on July 10, 1980.

In arriving at its determinations, the Commission has given due consideration to the information provided by the Department of Commerce, to all written submissions from interested parties, and to information adduced at the conference and obtained by the Commission's staff from questionnaires and other sources,

---

[1] Commissioners Bedell and Moore found reasonable indication of material injury or threat of material injury by reason of imports of menthol from Japan and the People's Republic of China.

[2] Item 406.60 for articles exported prior to July 1, 1980.

[3] Commissioner Stern finds that there not only is no indication of threat of material injury from alleged less-than-fair-value imports from the People's Republic of China of Menthol but also that there is no present injury from said imports.

all of which have been placed on the administrative record of these preliminary investigations.

Views of Chairman Bill Alberger and Vice Chairman Michael J. Calhoun

Determination and Conclusions of Law

On the basis of the record in investigation No. 731-TA-27 (Preliminary), we determine that there is no reasonable indication that an industry in the United States is materially injured or threatened with material injury, or that the establishment of an industry is materially retarded, by reason of imports from Japan of menthol, whether synthetic or natural, allegedly sold or likely to be sold at less than fair value (LTFV)

On the basis of the record in investigation No. 731-TA-28 (Preliminary), we determine that there is a reasonable indication that an industry in the United States is threatened with material injury by reason of imports from the People's Republic of China (China) of natural menthol allegedly sold or likely to be sold at less than fair value (LTFV).

Discussion

In these preliminary investigations, we consider the relevant domestic industry to be comprised of the four firms currently producing menthol in the United States. Section 771(4)(A) of the Tariff Act of 1930 (19 U.S.C. 1677(4)) provides, in part, guidance for determining what constitutes a domestic industry as follows:

(A) In general.—The term "industry" means the domestic producers as a whole of a like product, or those producers whose collective output of the like product constitutes a major proportion of the total domestic production of that product.

Section 771(10) of the Tariff Act of 1930 defines "like product" as "a product which is like, or in the absence of like, most similar in characteristics and uses with, the article subject to an investigation under this title."

The imported product alleged to be sold at LTFV is *l*-menthol. Imports of this product from Japan are synthetically produced while imports from China are exclusively natural menthol derived from the peppermint plant. The Ad Hoc Committee of American Importers of Natural Menthol argued in their post-conference submission that natural and synthetic menthols are not "like or similar" in characteristics and uses, and thus there exists no U.S. industry within the meaning of section 771(4)(A). The evidence indicates that synthetic and natural *l*-menthol have the same chemical formula and molecular structure, although synthetic menthol undergoes a chemical processing which natural menthol does not undergo. Apparently, while a small segment of endusers prefer the natural product because of actual or perceived qualitative differences, synthetic and natural menthol are used interchangeably by the vast majority of purchasers. We, therefore, find that domestically produced synthetic menthol is "like" the product imported from both Japan and China (synthetic and natural menthol, respectively) within the meaning of section 771(10) of the Tariff Act of 1930.

Having determined the nature of the domestic industry, Section 771(4)(D) of the Tariff Act of 1930 provides further guidance to the Commission in weighing the impact of alleged LTFV sales on that industry:

(D) Product Lines.—The effect of subsidized or dumped imports shall be assessed in relation to the United States production of a like product if available data permit the separate identification of production in terms of such criteria as the production process or the producers' profits. If the domestic production of the like product has no separate identity in terms of such criteria, then the effect of the subsidized or dumped imports shall be assessed by the examination of the production of the narrowest group or range or products, which includes a like product, for which the necessary information can be provided.

In accordance with section 771(4)(D), we have attempted where possible, to assess the impact of alleged LTVF imports on the production in the United States of *l*-menthol, that being potentially the narrowest "product line" comparable to the *l*-menthol being imported. *L*-menthol is the principal commercial form of menthol, and differs in characteristics and uses with the other commercial forms of menthol—*d*-menthol, racemic menthol,[4] and liquid menthol. Domestic producers, however, do not use separate faciliies or specific workers in the production of *l*-menthol, since *d*-menthol, racemic menthol, and liquid menthol are all obtained as by products in the synthesis of *l*-menthol. Most U.S. producers do not keep profit and loss data which would enable us to clearly identify a separate product line for *l*-menthol. Therefore, the effects of alleged LTFV imports have been assessed on the production of all menthol where separate data on *l*-menthol in unavailable. U.S. producers' commercial shipments of *l*-menthol have also accounted for more than 70 percent of all U.S. producers' commercial shipments of menthol since 1978. For purposes of this preliminary investigation, therefore, we have assumed that the overall trends for the menthol industry would be indicative of the trends for *l*-menthol.

The recommended determination of the Commission's Director of Operations [5] concluded that since imports from Japan and China are fungible, similar in chemical structure and uses, and compete in the same markets they should be cumulated for the purposes of assessing their impact on the domestic industry. We disagree. The facts revealed by these two investigations indicate that the impact of increasing menthol imports from China is in sharp contrast to the insignificant effect of the declining imports from Japan.

Based on the declining imports of menthol from Japan and the declining ratio of these imports to apparent U.S. open-market consumption, as well as statements made by officials from Takasago, USA, the exclusive importer of menthol from Japan and a wholly owned subsidiary of the foreign producer,[6] we have concluded that the Japanese are withdrawing from the U.S. menthol market. Thus it seems inappropriate to cumulate imports of menthol from Japan with imports from China. Inventories of menthol from Japan also declined in the first quarter of 1980 relative to the corresponding period in 1979, and the pricing data available to the Commission indicate that prices paid for the Japanese product have been consistently higher than prices paid for the domestic product in 1978 and 1979. Considering all these factors, it is apparent that menthol imported from Japan is not contributing in any meaningful way to the material injury, or threat thereof, that might be caused by imports from other countries. We have, therefore, determined that there is no reasonable indication that an industry in the United States is materially injured or threatened with material injury by reason of alleged LTFV sales of menthol from Japan.

Although the Director of Operations recommended that imports of menthol from China be cumulated with those from Japan, he also stated that if imports from these two countries were *not* cumulated, he would nevertheless still recommend an affirmative determination of threat of material

[4] There are some similarities in characteristics between racemic menthol and *l*-menthol, and hence, some overlap in their applications.

[5] Chairman Alberger includes the recommended determination of the Director of Operations for informational purposes at the end of our opinion at pages 12-14.

[6] See transcript of Conference, page 92.

injury be reason of alleged LTFV imports from China.[7] We agree with his analysis and conclusion on this issue. The economic factors that we have analyzed pursuant to section 771(7) of the Tariff Act of 1930, point to a steady improvement in the production of menthol in the United States. However, U.S. producers' inventories of menthol have increased to very high levels, prices for *1*-menthol have declined steadily since 1978, and the profitability of U.S. producers of *1*-menthol on their menthol operations has declined steadily since 1977. Based on the sharply increasing imports of menthol from China, the sharply increasing inventories of these imports, and the increasing margins of underselling that appear in the period July 1979 through March 1980, evidence of price depression, declining profitability of U.S. menthol producers' and their increasing inventories of menthol, we have concluded that there is a reasonable indication that an industry in the United States is threatened with material injury by reason of alleged LTFV imports of menthol from China.

Findings of Fact

The following findings of fact are relevant to our determination in these investigations. These findings contain our analysis of the statutory criteria required by section 771(7) (B) and (C) of the Tariff Act of 1930.

A. *Volume of imports.*—1. The imported menthol alleged to be sold at LTFV is chemically and toxicologically the same as that produced in the United States, although there is a recognized difference between the natural and synthetic products. This difference resides in the odor, taste, and ability of the natural product to be certified as a natural ingredient. These differences, however, are only significant to a minor portion of the market (less than 10 percent). For the vast majority of end users of menthol, the synthetic and natural products appear to be interchangeable. (See Report at p. A-3)

2. Imports of menthol from Japan have declined steadily since 1978. They declined by more than 35 percent from 1978 to 1979, and by more than 15 percent in January-March 1980 over imports during the corresponding period in 1980. (See Report at p. A-28)

3. Imports of menthol from China increased dramatically from 29,000 pounds in 1977 to 649,000 pounds in 1979. (See Report at p. A-28)

4. Takasago, USA's end-of-period inventories of menthol increased by more than 50 percent from 1977 to 1979, but declined by more than 10 percent in January-March 1980 over those held for the corresponding period of 1979. (See Report at p. A-17)

5. U.S. importers' and end-of-period inventories of menthol from China have increased dramatically from virtually nothing in 1977 and 1978 to over 600,000 pounds in January-March 1980. Importers' inventories as of March 31, 1980, amounted to over 10 percent of apparent U.S. open-market consumption in 1979. Thus, inventories of menthol from China represent a significant overhang of the U.S. market. (See Report at p. A-17)

B. *The effect of imports on U.S. prices.*—6. U.S. producers' weighted average prices for *1*-menthol have generally declined since January 1978. the have declined from $7.30 per pound in January-March 1978 to $6.33 per pound in January-March 1980, or by 13 percent. (See Report at p. A-31)

7. The weighted average prices paid for *1*-menthol from Japan were consistently higher than prices paid for U.S. producers' *1*menthol from 1978 through 1979. Prices paid for imports from Japan dropped below U.S. producers' prices only in January-March 1980 and even then, the margin of underselling was less than 0.5 percent. (See Report at p. A-31)

8. The available data indicate that weighted average prices paid for menthol from China have declined at a faster rate than U.S. producers' weighted prices. Although these prices were generally higher than U.S. producers' weighted average prices throughout much of the period, they dropped below U.S. producers' prices in October-December 1979. The average margin of underselling in that quarter was three percent and increased to eight percent in January-March 1980. Prices of some importers of menthol from China were below the lowest U.S. prices from July 1979 through March 1980. In a market where menthol is sometimes traded within 10 cents per pound, these are significant margins. Moreover, since these prices generally reflect the delivered prices in contracts negotiated 1 to 2 years previous to the date of delivery, it may be assumed that the downward trend is significant and indicative of the trend for prices to be paid for menthol from China in 1980 and 1981. (See Report at p. A-31)

C. *Impact on the affected industry.*—9. After several years of sustained growth, U.S. producers' commercial shipments of menthol declined by 5 percent in January-March 1980 over shipments during the corresponding period of 1979. (See Report at p. A-8)

10. U.S. producers' inventories of menthol have increased to very high levels during the period under consideration. End-of-period inventories increased more than six-fold from 1977 to 1979 and nearly doubled in January-March 1980 relative to those in January-March 1979. As a ratio of net sales, U.S. producers' inventories of menthol more than doubled from 1977 to January-March 1980. (See Report at p. A-17)

11. Despite rapidly increasing sales, the profitability of domestic producers of *1*-menthol on their menthol operations has declined steadily since 1977. The ratio of net operating profits to net sales declined by more than 30 percent from 1977 to 1979. (See Report at p. A-23)

12. As a ratio of imports to apparent U.S. open-market consumption of menthol, imports from Japan have declined steadily since 1977. They declined from 10 percent in 1977 to 8 percent in January-March 1980, or by 24 percent. (See Report at p. A-28)

13. Imports from China have increased steadily and significantly as a ratio of apparent U.S. open-market consumption. The ratio increased from a nominal percentage in 1977 to over 30 percent in January-March 1980. (See Report at p. A-28)

14. The average number of production and related workers producing menthol declined slightly from 1978 to January-March 1980. (See Report at p. A-22)

15. Wages paid to all production and related workers producing menthol more than quadrupled from 1977 to 1979 and increased again in January-March 1980 over wages paid during the correponding period in 1979. (See Report at p. A-22)

16. Overall U.S. capacity to produce menthol has increased steadily from 1977 to 1980 because Haarman & Reimer opened a new plant in 1978 which is still in the process of reaching optimal operating conditions. The capacity of other menthol producers has remained stable or declined. (See Report at p. A-14)

17. All information regarding U.S. producers' cash flow is considered "business confidential" and cannot be discussed publicly. Such information appears in the confidential version of the staff report at page A-36, and has been fully considered in our determination.

18. A $15 million investment was made by the petitioner Haarman & Reimer Corporation in a new U.S. production facility located in Bushy Park, South Carolina. Production at this plant was commenced in the first quarter of 1978. The inability of petitioner to operate this plant at a

[7] Staff briefing at public Commission meeting, July 22, 1980.

reasonable level of profit may threaten or impair the ability to raise additional capital necessary for future investments in U.S. facilities by petitioner and/or other firms. (Petition, public version, pages 37–41)

Supporting Statement by the Director of Operations for an Affirmative Preliminary Determination on Menthol From Japan and the People's Republic of China (Investigations Nos. 731–TA–27 and 28 (Preliminary))

I. *Recommendation.*—On the basis of my review of the information developed during these investigations, I recommend that the Commission determine that there is a reasonable indication that an industry in the United States is materially injured or is threatened with material injury by reason of the importation of menthol from Japan and the People's Republic of China (PRC) that is allegedly sold in the United States at less than fair value (LTFV). The question of material retardation of the establishment of an industry in the United States is not an issue in these investigations as there are four companies producing menthol in the United States.

II. *The industry.*—The industry in the United States is composed of four U.S. firms producing menthol. Although menthol is produced by the industry in four commercially signficant forms—*1*-menthol, *d*-menthol, racemic menthol, and liquid menthol, in 1979, *1* and racemic menthol represented over 90 percent of domestic production and over 98 percent of alleged LTFV imports. *D*-menthol is produced as a by-product of the petitioner's production process and internally consumed. Liquid menthol is dissimilar with all other forms of menthol in that it is a technical grade used in a limited number of industrial applications. Although the impact of LTFV imports appears to be on production of *1* and racemic menthol, all forms are produced in the same production facilities, utilizing the same equipment and the same employees. Most firms were unable to provide data in terms of labor and overhead costs or profitability on a product line basis. Therefore, the impact of alleged LTFV sales should be assessed on the domestic industry producing menthol.

III. *Material injury.*—(1) U.S. imports of menthol from Japan and the PRC are all alleged to be at LTFV prices. Alleged LTFV imports have increased substantially from over 300,000 pounds in 1977 to about 850,000 pounds in 1979. Imports from Japan and the PRC are fungiable, having the same chemical structures, the same end uses, similar prices and competing in the same markets. For these reasons the impact of imports from Japan and the PRC have been cumulated.

(2) The petition alleges significant price undercutting by imports from Japan and the PRC as compared with the price of like domestic products. The alleged result of such price undercutting was the 44 percent reduction of petitioner's price for *l*-menthol in slightly more than 3 years.

(3) Questionnaire data submitted to the Commission confirm a sharply downward trend in importers' and producers' prices. The prices of importers of Chinese and Japanese menthol began undercutting U.S. producers' prices for menthol delivered to U.S. customers beginning in the last quarter of 1979 and continuing into the first quarter of 1980.

(4) Despite rapidly increasing sales of menthol, profitability of U.S. producers' menthol operations declined sharply in 1979. Although net sales reported by the two largest U.S. producers increased by almost 15 percent from 1978 to 1979, the ratio of net operating profit to net sales declined by about 20 percent.

IV. *Threat of material injury.*—(1) Imports of menthol from Japan and the PRC, alleged to be sold at LTFV prices, increased by over 165 percent from 1977 to 1979.

(2) The share of the U.S. market accounted for by imports from Japan and the PRC increased from 11.0 percent in 1977 to 22.0 percent in 1979.

(3) U.S. producer's commercial shipments of menthol declined by 5 percent in Jan.–Mar. 1980 as compared to such shipments in Jan.–Mar. 1979.

(4) U.S. producers' inventories of menthol increased steadily during 1977–79 to extremely high levels. Inventories were equivalent to 21 percent of U.S. producers' sales in 1977 and to 33 percent in 1979. Inventories on March 31, 1980 were 85 percent greater than they were on March 31, 1979.

(5) The quantity of menthol held in inventory by producers' increased by more than 600 percent between December 31, 1977 and March 31, 1980.

(6) Importers of menthol from Japan and the People's Republic of China reported a thirteen-fold increase in inventories from 1977 to 1979. Importers' inventories continued to increase in 1980 reaching a level on March 31, 1980 over 200 percent greater than inventories on March 31, 1979.

(7) As a ratio of inventories to imports, importer's inventories represented 13 percent of imports in 1977 and over 74 percent of imports in 1979.

(8) According to data presented by the petitioner, the trend in price undercutting by alleged LTFV imports, confirmed by questionnaire data submitted to the Commission, is likely to worsen as deliveries on contracts negotiated in late 1979 and early 1980 are affected in late 1980 and in 1981.

(9) The PRC has dramatically increased its production of menthol from 1.1 million pounds in 1978 to an estimated 4.4 million pounds in 1980. Menthol has been designated by the Chinese Government as a product to be promoted for export to generate quick revenue without large investments. The PRC currently exports about 20 percent of its menthol production to the United States.

(10) The annual menthol production capacity of Takasago Perfumery, Ltd. is reported to be 1.0 million pounds. About 15 percent of Takasago's production in 1979 was exported to the U.S. In addition to Takasago, seven other Japanese firms produce menthol with a combined production capacity of over 600,000 pounds. These companies do not currently export to the United States.

V. *Conclusion.*—I recommend that the Commission determine that there is a reasonable indication that an industry in the United States is materially injured or is threatened with material injury by reason of the importation of menthol from Japan and the People's Republic of China that is allegedly sold in the United States at less than fair value.

Statement of Reasons of Commissioners George M. Moore and Catherine Bedell

On the basis of the information available in investigations Nos. 731–TA–27 and 28 (Preliminary), we determine that there is a reasonable indication that an industry in the United States is materially injured or threatened with material injury by reason of the importation of menthol from Japan and the People's Republic of China that is allegedly being sold or is likely to be sold at less than fair value (LTFV).

The following findings and conclusions, which are based on the record in these investigations, support our determination.

The Domestic Industry

The term "industry" is defined in section 771(4)(A) of the Tariff Act of 1930 (19 U.S.C. 1677(4)(A)) as meaning "the domestic producers as a whole of a like product, or those producers whose collective output of the like product constitutes a major proportion of the total domestic production of that product." The term "like product" is further defined in section 771(10) of the Tariff Act as meaning "a product which is like, or the absence of like, most similar in characteristics and uses with,

the article subject to an investigation * * *."

In the present case, we find the industry to consist of the four U.S. firms producing menthol. There are four commercial forms of menthol—*l*-menthol, *d*-menthol, racemic menthol, and liquid menthol. Although the product alleged to be sold at LTFV is *l*-menthol, domestic producers do not use separate facilities or specific workers in the production of *l*-menthol. The other three commercial forms of menthol, *d*-menthol, racemic menthol, and liquid menthol are obtained as byproducts in the synthesis of *l*-menthol, in using the same equipment and labor as in the production of *l*-menthol. Most firms were unable to provide data in terms of labor, overhead costs, and profitability on a product-line basis.[8] Therefore, the alleged LTFV sales have been assessed on the basis of the domestic industry producing all types of menthol.

The imported menthol allegedly sold at LTFV is chemically and toxicologically the same as that produced in the United States. Although there is a perceived difference in the odor and taste of the natural product compared with those of the synthetic product, and although the natural product can be certified as a natural ingredient, these differences are significant only to a minority of end users, which account for less than 10 percent of U.S. consumption of menthol.[9] Thus, the vast majority of end users consider domestic menthol, as well as menthol from Japan and China, to be fungible articles, which have the same chemical structures, the same end uses, and similar prices and which compete in the same markets.

The Question of a Reasonable Indication of Material Injury or Threat Thereof

Section 733(a) of the Tariff Act of 1930 directs that the Commission "shall make a determination, based upon the best information available to it at the time of the determination * * *." Section 771(7)(A) defines the term "material injury" to mean "harm which is not inconsequential, immaterial, or unimportant." And section 771(7)B) and (C) directs that the Commission, in making its determination, consider, among other factors, (1) the volume of imports of the merchandise which is the subject of the investigations, (2) the effect of imports of such merchandise on prices in the United States for like products, and (3) the impact of such merchandise on domestic producers of like products.

Volume of imports.—Imports of *l*-menthol, which are allegedly being sold at LTFV, increased from 224,000 pounds in 1977 to 854,000 pounds in 1979, or by 280 percent, while total imports of menthol from Japan and China more than doubled.[10] As a share of apparent U.S. open-market consumption, imports from Japan and China increased steadily, from 11 percent in 1977 to over 30 percent in January–March 1980.[11] Thus the volume and relative market share of alleged LTFV imports showed dramatic increases over the period under consideration.

The Japanese have the capacity to produce 1 million pounds of menthol annually from a variety of feedstocks including *d*-limonene, *d*-citronella, thymol, and cornmint oil (dementholized peppermint oil).[12] The capability of the Chinese to produce menthol is virtually unlimited. Menthol has been designated by the Chinese government as a product to be promoted for exportation, and production has increased dramatically in the last 2 years. Estimated Chinese production of menthol is estimated to be 1.1 million pounds in 1978, 3.3 million pounds in 1979, and 4.4 million pounds in 1979.[13] If Chinese production should reach the estimated 1980 level, it would be much greater than estimated open-market consumption in the United States.[14]

Effect of imports on prices.—The data collected by the Commission on delivered prices for *l*-menthol demonstrate that U.S. prices have declined steadily and significantly since 1978. U.S. producers' weighted average prices declined from $7.30 per pound in January 1978 to $6.33 per pound in January–March 1980, or by 13 percent.[15] Although weighted average prices for *l*-menthol from Japan and China were generally higher, they declined at a faster rate than U.S. producers' prices.[16] In October–December 1979, weighted average prices for menthol from China dropped 3 percent below U.S. producer's weighted average prices, and in January–March 1980 this margin of underselling increased to 8 percent.[17]

In a market where menthol is sometimes traded within 10 cents a pound,[18] these margins are already significant. When they are viewed as indicative of a downward trend in contract prices for delivery in late 1980 or 1981, they have a clearly adverse effect on future prices as well. More than 90 percent of the menthol traded in the United States is bought and sold through contracts for future delivery.[19] These contracts can be negotiated anywhere from 6 months to 3 years before the date of delivery. They contain firm commitments on price and quantity by the supplier, but usually contain an escape clause which allows the purchaser to break the contract if it can find a supplier offering menthol at a lower price. When spot-market prices for menthol fall, prices for menthol throughout the market decline, bringing about price competition for contracts under negotiation, and thus effectively depressing prices for future delivery.

Impact of alleged LTFV imports on the affected industry.—After several years of sustained growth, U.S. producers' commercial shipments of menthol declined by 5 percent in January–March 1980 compared with shipments during the corresponding period of 1979.[20] Yet despite the generally increasing sales, U.S. producers' inventory levels have increased dramatically. The ratio of end-of-period inventories to sales of menthol increased from 21 percent in 1977 to 48 percent in 1979 and nearly doubled again in January–March 1980 relative to the ratio for January–March 1979.[21] As of March 31, 1980, inventories of all menthol amounted to more than 200 percent of the menthol sold during January–March 1980.[22]

Moreover, U.S. importers' inventories of menthol from Japan and China increased more than thirteenfold from December 31, 1977, to December 31, 1979.[23] Inventories continued their strong upward movement in 1980, more than tripling from March 31, 1979, to March 31, 1980.[24] Inventories of menthol from Japan and China held as of March 31, 1980, amounted to more than 2.5 times the menthol imported from these countries during January–March 1980.[25]

Despite rapidly increasing sales of menthol, U.S. producers' profitability on their menthol operations declined steadily after 1977.[26] The ratio of net operating profit to net sales declined by

[8] See Commission Report in Investigations Nos. 731-TA-27 and 28 (Preliminary) (hereafter "Report"), at p. A-21.

[9] Report, at p. A-3.

[10] Report, at p. A-28.

[11] Report, at p. A-28.

[12] Report, at p. A-12.

[13] Report, at p. A-11.

[14] Report, at p. A-20.

[15] Report, p. A-31.

[16] Report, p. A-31.

[17] Report, p. A-31.

[18] Report, p. A-32.

[19] Report, p. A-6.

[20] Report, p. A-8.

[21] Report, at p. A-17.

[22] Report, at p. A-17.

[23] Report, at p. A-19.

[24] Report, at p. A-19.

[25] Report, at p. A-19.

[26] Report, at p. A-21.

more than 30 percent, reflecting the declining trend in prices.[27]

Conclusion

On the basis of the information developed during these investigations, we have concluded that there is a reasonable indication that an industry in the United States is materially injured or is threatened with material injury by reasons of alleged LTFV imports of menthol from Japan and China.

Views of Commissioner Paula Stern

I have determined that there is no reasonable indication of material injury or threat of such injury due to alleged less-than-fair-value (LTFV) imports of menthol from Japan or from the People's Republic of China (China). I would have reached the same conclusion had I found it appropriate to cumulate the effect of the imports from Japan and China.

The Imported Product

The Commission instituted these investigations with regard to all menthol, whether natural or synthetic, as provided for in items 437.64 and 413.68 of the Tariff Schedules of the United States. The imported product alleged to be sold at LTFV is *l*-menthol, which is the principal commercial form of menthol and differs in characteristics and uses with the other commercial forms of menthol—*d*-menthol, racemic menthol,[28] and liquid menthol. The domestic producers do not use separate facilities or workers in the production of *l*-menthol. Rather, *d*-menthol, racemic menthol, and liquid menthol are all obtained as by-products in the synthesis of *l*-menthol.

The product imported from China is a natural product obtained by distilling peppermint oil from peppermint plants followed by crystalization and separation of the menthol from the peppermint oil. The Japanese product is synthesized chemically, as is the menthol produced in the United States. While the imported *l*-menthol allegedly sold at LTFV is chemically and toxicologically the same as that produced in the United States, there remains a perceived difference in the odor and taste of the natural product as compared to the synthetic product. In addition, the natural product can be certified by food and flavor manufacturers as a natural ingredient. However, because the vast majority of purchasers now use synthetic and natural menthol interchangeably,[29] I find that domestically-produced synthetic menthol is a "like product" for both the synthetically-produced and natural imports, within the meaning of section 771(10) of the Tariff Act of 1930.

The Domestic Industry

The domestic industry consists of the four U.S. producers of menthol.[30] The smallest U.S. menthol producer, Givauden Corporation, produces only liquid menthol, not a marketable substitute for *l*-menthol. The next largest U.S. producer, Union Camp Corporation, also exclusively produces liquid menthol, which it consumes internally. SCM Corporation (SCM), the second largest firm, produces *l*-menthol and racemic menthol, which are primarily sold on the open market. SCM took no position on this investigation. Givauden, Union Camp, and SCM all produce menthol on equipment used to produce other chemicals. In contrast, the largest producer and petitioner in this investigation, Haarmann & Reimer, which makes *l*-menthol and its by-products, utilizes a plant dedicated exclusively to the production of menthol. Since its entry in the first quarter of 1978, Haarmann & Reimer has steadily increased its importance in the domestic industry.

I have attempted where possible to assess the impact of alleged LTFV imports on the production in the United States of *l*-menthol. However, most U.S. producers do not keep product line data as to production process, labor, overhead, or profits that would allow me to confine my analysis to *l*-menthol. Therefore, the effects of alleged LTFV imports have been assessed on the production of all menthol where seaparate data is unavailable. Thus, Givauden and Union Camp were included as parts of the domestic industry in spite of the fact that they produce only liquid menthol.

U.S. producers' commercial shipments of *l*-menthol have accounted for more than 70 percent of all U.S. producers' commercial shipments of menthol since 1978.[31] I have, therefore, necessarily made the assumption that the overall trends for the menthol industry would be indicative of the trends for the *l*-menthol industry.

The Question of a Reasonable Indication of Material Injury

Available data depict a rapidly growing and reasonably profitable industry. U.S. production of menthol has increased steadily and dramatically since 1977, by over 200 percent.[32] U.S. capacity to produce menthol has also increased steadily, by over 150 percent from 1977 to 1979, and again by more than five percent in January–March 1980 compared to the corresponding period in 1979.[33] Utilization of this greatly increased capacity has also increased steadily to an exceptionally high level in January–March 1980.[34] The average number of all employees in U.S. establishments producing menthol increased by more than 20 percent from 1977 to January–March 1980.[35] Wages paid to and manhours worked by all producers and related workers producing menthol also increased steadily and significantly since 1977.[36]

The aggregate figures for U.S. producers' profitability show a decline from 1977 to 1979.[37] Having individually examined the profitability of each producer of *l*-menthol, I have concluded that the data indicate adequate profits for the two relevant U.S. producers. SCM's profits can be characterized as adequate, if not good.

As to Haarmann & Reimer's profitability, one must consider the fact that it is but one part of a large, multinational corporation, Bayer AG, and its profits are to a large extent influenced by the transfer prices applicable to its purchase of feedstocks from and its sale of menthol to its corporate affiliates in other countries.[38] One must also take into consideration the fact that this firm has only been in business since 1978 and that it was entering a new, unfamiliar, market.[39] For example, it is questionable whether in making its decision, in 1975, to build production facilities to supply a subtantial segment of the U.S. market it factored in China as a possible reentrant into this market.[40] In addition, Haarmann & Reimer was marketing a new form of the product—a synthetic menthol made from a petrochemical rather than natural menthol—which was not readily accepted by consumers. Moreover, Haarmann & Reimer incurred all the costs inherent in the start-up

[27] Report, at p. A–24.

[28] There are some similarities in the characteristics between racemic menthol and *l*-menthol, and hence, some overlap in their applications.

[29] Estimated U.S. consumption is as follows: tobacco 60 percent, pharmaceuticals 15 percent, oral hygiene products 12 percent, personal care products 6 percent, and miscellaneous 7 percent. *See* report, p. A–3.

[30] *See* section 771(4)(a) of the Tariff Act of 1930.

[31] *See* Reports, p. A–10.

[32] *Ibid.*, p. A–14.

[33] *See* Report, p. A–14.

[34] *Ibid.*

[35] *Ibid.*, p. A–22.

[36] *Ibid.*

[37] *Ibid.*, p. A–23.

[38] *Ibid.*, p. A–24

[39] *See* report, p. A–24.

[40] *Ibid.*, p. A–17.

process at its $15 million facility at Bushy Park, South Carolina. In light of these circumstances, Haarmann & Reimer's performance has been quite good.

U.S. producers' inventories of menthol have admittedly increased to high levels. However, the reasons for much of these increases are unrelated to the alleged LTFV imports. Haarmann & Reimer's production process requires the plant to operate at maximum potential capacity, twenty-four hours a day, seven days a week, three-hundred-sixty-five days a year in order to achieve reasonable production costs.[41] Thus, if the company cannot find buyers for its annual production of menthol, near its capacity of 1.5 million pounds, inventories necessarily build up.

A closer look at U.S. producers' inventories reveals that the by-products, *d*-menthol, racemic, and liquid menthol, not *l*-menthol, constitute a substantial portion of total menthol inventories.[42] Increasing inventories of *d*-menthol, liquid, and racemic menthol resulting from the increased production of *l*-menthol cannot be associated with the alleged LTFV imports of *l*-menthol. Moreover, these byproduct inventories can be classified as raw materials since Haarmann & Reimer recycles them into the production process of *l*-menthol. Haarmann & Reimer's increasing ratio of inventories to production of all menthol [43] appears more dramatic since it starts at zero. But in fact normal inventories for this firm cannot be known from its two year experience in the businesss.

I have been unable to find indications of injury to the domestic industry. I find the lack of a causal nexus between any possible injury or threat of injury and the alleged LTFV imports even more compelling toward a negative determination in this case.

Imports in the Menthol Commodity Market

Menthol is easy to store. It requires no special facilities or handling and deteriorates only minimally even after several years in storage. These characteristics, combined with the fact that the menthol market has traditionally been supplied with a natural product which is subject to the vagaries of nature, have apparently encouraged the development of a commodity market for menthol.[44] The impact of importers must be considered in light of the nature of this market.

Today, more than 90 percent of menthol in the United States is sold through contracts for future delivery.[45] These contracts may be negotiated six months to three years prior to the date of delivery. They represent a firm commitment of price and quantity by the supplier, but require less of a commitment from the purchaser. The purchaser can, in fact, opt out of his contract if he finds a supplier offering menthol at a lower price.[46] Thus, in the short run, the menthol market is price sensitive downward, *i.e.*, if spot-market prices fall, contract prices will decline, whereas if spot-market prices rise, the contract prices will remain the same and hold overall market prices down until the effect of prices in new contracts become significant.

In 1978 the supply to the U.S. market increased dramatically. Demand was increasing moderately, although apparent consumption, perhaps due to brokers' inventories, saw a marked increase.[47] Meanwhile, on the supply side, SCM had reentered as a supplier in 1975; Haarmann & Reimer entered with record production; imports from Brazil, the predominant supplier, increased; China reentered the market with a substantial quantity of menthol; and Japan continued as a supplier.

Imports of menthol from Japan have declined steadily as a ratio of apparent U.S. open market consumption, while imports from China have increased markedly as a ratio to apparent U.S. consumption.[48] This ratio increase for China appears large since we are witnessing China's reentry into the market from near zero. However, this increase is more than offset by the decline in the ratio of imports from all other countries.[49] The ratio of total imports of menthol to apparent U.S. open-market consumption has declined steadily, by 11 percent from 1977 to January–March 1980.[50] Thus, China is not increasing its market share at the expense of domestic producers, since domestic producers' share of the market is actually increasing.

Since 1978, the oversupply in the menthol market led to high inventories and decreasing prices.[51] These require examination as portents of injury.

The pricing information obtained by the Commission shows that prices have declined steadily since 1978. However, when one considers the significant oversupply that commenced at that time, it is not surprising that prices for both imported and domestically produced menthol declined, especially in light of the fact that the menthol market is price sensitive downward. Moreover, the pricing information obtained by the Commission indicates that during most of the period under consideration, prices paid for imports of menthol from Japan and China were considerably higher than prices paid for the domestic product.[52]

In the last quarter of 1979 and the first quarter of 1980, the delivered price of Chinese imports fell below domestic producer-delivered prices.[53] And in the first quarter of 1980 Japanese-delivered prices fell marginally below those of domestic producers.[54] However, delivered price data for a commodity sold essentially by contract for future delivery do not offer a meaningful picture. Furthermore, even if the same relationship between the imported and domestic product held for contract prices, it could not be assigned much weight without first establishing comparability in the lengths of the contracts. Because the Chinese were willing to make a longer-term contract than at least one major domestic producer,[55] establishing comparability could be quite complicated. An interesting price-related aspect of this investigation is that SCM decided to reenter and Haarmann & Reimer decided to start up production during this period of high prices following crop failures in Brazil.[56]

Growth of importers' inventories of a commodity contracted for future delivery results from increased purchases by consumers availing themselves of the opportunity to buy low and sell high when prices rise. In fact, importers' inventories of Chinese imports have increased, but there is nothing to show the *overall* inventories have also increased. Inventories of Japanese imports have in fact declined in 1979–1980.

Questionnaire data from one U.S. importer of menthol who inadvertently

[41] *See* Post-Public Conference Brief of Petitioner, p. 14.

[42] *See* reports, p. A-17.

[43] *See* report, p. A-3.

[44] *Ibid.*, p. A-6.

[45] *Ibid.*

[46] *See* report, p. A-6.

[47] *Ibid.*, p. A-18.

[48] *Ibid.*, p. A-17.

[49] *See* report, p. A-17. The volume of Japanese imports has declined significantly during the period of investigation.

[50] *Ibid.*, p. A-17.

[51] The sensitivity of prices to supply in this market was illustrated dramatically in 1973 and 1974 when prices for natural menthol rose from $3 to $4 per pound to over $22 per pound following two consecutive crop failures in Brazil. (See post-Conference submission on behalf of the Ad-Hoc Committee of American Importers of Natural Menthol, p. 10, Table 1.) This happended in a market where prices are sticky upward.

[52] *See* report, p. A-31.

[53] *See* report, p. A-31.

[54] *Ibid.*

[55] *Ibid.*, p. A-32.

[56] SCM had been driven out of the market in 1963 by plummeting prices due to a large supply of Brazilian menthol in the U.S. market.

supplied total inventory data tends to support the conclusion that inventories of menthol imported from China, like total imports of menthol from China, while growing, are for the most part simply displacing inventories of menthol from other sources. Therefore, I am unable to find a threat of injury from these Chinese imports.

In attempting to verify Haarmann & Reimer's allegation of lost sales, the Commission's staff found no clear cut case of a sale lost to alleged LTFV imports for reason of price.[57] The four firms contacted confirmed purchasing imports from Japan or China. However, each stated that these purchases did not represent a change in the company's supply patterns. One company also stated that Haarmann & Reimer was unwilling to offer them the long-term contract it desired, whereas China was willing to break the traditional pattern of offering a contract for one or two years by extending a three-year contract.[58]

It also appears that U.S. consumers of menthol are moving to diversify sources of supply and have some interest in seeing their long-term traditional supplier, China, returned to the market.

Conclusion

By 1975 the steady growth of the U.S. market, the new technological methods for the production of menthol, and the two consecutive crop failures in Brazil enticed U.S.-based producers into the production of menthol. Since that time their production of menthol, the success of Brazil's crops, and normalization of trade relations with China have created an oversupply in the commodity market for menthol. Nevertheless, U.S. industry has been able to withstand the competition in this situation. The economic indicators are positive and profits, when considered in relation to each individual producer, are good. Thus, I find no reasonable indication that an industry in the United States is materially injured or threatened with material injury by reason of LTFV imports from the People's Republic of China and/or Japan.

By order of the Commission.

Issued: July 28, 1980.

Kenneth R. Mason,

Secretary.

[FR Doc. 80-23668 Filed 8-5-80; 8:45 am]

BILLING CODE 7020-02-M

[57] *See* report, p. A-32.

[58] *Ibid.*

[TA-201-44]

Certain Motor Vehicles and Certain Chassis and Bodies Therefor; Hearing

Notice is hereby given that the public hearing in this matter set to begin at 10 a.m. Wednesday, October 8, 1980, will be held in the Great Hall of the U.S. Department of Justice, Constitution Avenue, between 9th and 10th Streets NW., Washington, D.C.

Notice of the investigation and hearing and notice of a change in Commission procedures were published in the Federal Register of July 7, 1980, and July 22, 1980 (45 FR 45731 and 45 FR 48996, respectively).

By order of the Commission.

Issued: July 28, 1980.

Kenneth R. Mason,

Secretary.

[FR Doc. 80-23667 Filed 8-5-80; 8:45 am]

BILLING CODE 7020-02-M

[Investigation No. 337-TA-85]

Certain Slide Fastener Stringers and Machines and Components Thereof for Producing Such Slide Fastener Stringer; Denial of Motion To Strike Certain Portions of the Complaint of Talon Division of Textron, Inc.

Upon consideration of Motion Docket No. 85-2, as certified to the Commission by the Administrative Law Judge (ALJ) on June 25, 1980, and the ALJ's recommendation that the motion be denied, the Commission has ordered that said motion is denied.

Copies of the Commission action and Commission order are available to the public during official working hours at the Office of the Secretary, U.S. International Trade Commission, 701 E Street, NW., Washington, D.C., telephone (202) 523-0161.

By order of the Commission.

Issued: July 29, 1980.

Kenneth R. Mason,

Secretary

[FR Doc. 80-23666 Filed 8-5-80; 8:45 am]

BILLING CODE 7020-02-M

DEPARTMENT OF JUSTICE

Antitrust Division

Proposed Final Judgment in United States v. Ashland Oil, Inc., et al., and Competitive Impact Statement Thereon

Notice is hereby given pursuant to the Antitrust Procedures and Penalties Act, 15 U.S.C. 16(b)-(h), that a proposed Final Judgement and a Competitive Impact Statement (CIS) as set out below have been filed with the United States District Court for the Western District of Kentucky, at Louisville, in *United States v. Ashland Oil, Inc., et al.*, Civil No. 77-0342 L(A). the Complaint in this case alleges that four corporations (Ashland Oil, Inc., Cargill, Incorporated, Reichhold Chemicals, Inc., and Reliance Universal, Inc.) violated the Sherman Act by conspiring to fix the prices of coatings resins sold throughout the United States.

The proposed Judgment enjoins the defendants from engaging in or renewing the alleged conspiracy and from communicating with one another or with other coatings resins manufacturers about prices.

Ashland Oil, Inc. sold its coatings resins business before the filing of the proposed Judgment. It is enjoined from engaging in or renewing the alleged conspiracy, but is excused from certain other requirements of the proposed Judgment so long as it is not in the coatings resins business.

The CIS describes the terms of the proposed Judgment and the background of the action and concludes that the proposed Judgment provides appropriate relief against the violation alleged in the Complaint.

Public comment is invited within the 60-day comment period. Such comments, and responses thereto, will be published in the Federal Register and filed with the Court. Comments should be directed to John A. Weedon, Chief, Great Lakes Field Office, Antitrust Division, Department of Justice, 995 Celebrezze Federal Building, Cleveland, Ohio 44199.

Joseph H. Widmar,

Director of Operations.

U.S District Court for the Western District of Kentucky at Louisville

United States of America, Plaintiff, v. *Ashland Oil, Inc.; Cargill, Incorporated; Reichhold Chemicals, Inc.; and Reliance Universal, Inc.*, Defendants.

Civil Action No. C 77-0342 L (A), Judge Charles M. Allen.

Filed: July 11, 1980.

Stipulation

It is stipulated by and between the undersigned parties, by their respective attorneys, that:

1. The parties consent that a Final Judgment in the form hereto attached may be filed and entered by the Court, upon the motion of any party or upon the Court's own motion, at any time after compliance with the requirements of the Antitrust Procedures and Penalities Act (15 U.S.C. § 16), and without further notice to any party or other proceedings, provided that plaintiff has not withdrawn its consent, which it may do at any time before the entry of the proposed Final Judgment by serving notice thereof on

defendant and by filing that notice with the Court.

2. In the event plaintiff withdrawns its consent or if the proposed Final Judgment is not entered pursuant to this Stipulation, this Stipulation shall be of no effect whatever and the making of this Stipulation shall be without prejudice to any party in this or any other proceeding.

Dated: July 11, 1980.

For the plaintiff: Sanford M. Litvack; Joseph H. Widmar; John A. Weedon; *Attorneys, Department of Justice.*

John L. Smith, *United States Attorney; Edmund Round; Michael J. Keane; Theresa M. Majkrzak; Attorneys, Department of Justice, Antitrust Division, 995 Celebrezze Federal Building, Cleveland, Ohio 44199; telephone: (216) 522-4189.*

For defendant Ashland Oil, Inc.: Ray S. Bolze, *Howrey & Simon.*

For defendant Cargill, Incorporated: Erwin C. Heininger, *Mayer, Brown & Platt.*

For defendant Reichhold Chemicals, Inc.: George Reycraft, *Cadwalder, Wickersham, and Taft.*

For defendant Reliance Universal, Inc.: Wesley P. Adams, Jr., *Ogden, Robertson & Marshall.*

U.S. District Court for the Western District of Kentucky at Louisville

United States of America, Plaintiff, v. *Ashland Oil, Inc.; Cargill, Incorporated; Reichhold Chemicals, Inc.; and Reliance Universal, Inc.*, Defendants.

Civil Action No. C 77-0342 L (A).

Filed: July 11, 1980.

Final Judgment

Plaintiff, United States of America, having filed its complaint herein on July 22, 1977, and plantiff and defendants, by their respective attorneys, having consented to the entry of this Final Judgment without trial or adjudication of any issue of fact or law herein and without this Final Judgment constituting any evidence against or admission by any party with respect to any such issue;

Now, therefore, before the taking of any testimony and without trial or adjudication of any issue of fact or law herein and upon consent of the parties hereto, it is hereby

Ordered, adjudged and decreed, as follows:

I

This Court has jurisdiction of the subject matter of this action and of each of the parties consenting hereto. The Complaint states a claim upon which relief may be granted against each defendant under Section 1 of the Sherman Act (15 U.S.C. § 1).

II

As used in this Final Judgment, the term:

(A) "Person" means any individual, corporation, partnership, firm, association, or other business or legal entity;

(B) "Alkyd resins" means synthetic resins produced by the reaction of a poly-basic acid, a poly-hydric alcohol, and a mono-basic fatty acid or oil;

(C) "Copolymer resins" means alkyd resins modified with unsaturated monomers, such as vinyl toluene, styrene, or acrylic materials;

(D) "Urethane resins" means synthetic resins made by the reaction of isocyanates with hydroxyl-containing compounds;

(E) "Coatings resins" means alkyd resins, copolymer resins, and/or urethane resins; and

(F) "Coatings resins manufacturer" means any person engaged in the business of manufacturing coatings resins.

III

This Final Judgment applies to the defendants and to their officers, directors, agents, employees, subsidiaries, successors, and assigns, and to all other persons in active concert or participation with any of them who shall have received actual notice of this Final Judgment by personal service or otherwise, provided, however, that this Final Judgment shall not apply to transactions or activities solely between a defendant and its directors, officers, employees, parent companies, subsidiaries or any of them when acting in such capacity, nor does this Final Judgment apply to activities occurring outside the United States and not affecting the domestic or foreign commerce of the United States.

IV

Each defendant is enjoined and restrained from entering into, adhering to, participating in, maintaining, furthering, enforcing or claiming, either directly or indirectly, any rights under any contract, agreement, understanding, arrangement, plan, program, combination or conspiracy with any other coatings resins manufacturer to:

(A) fix, establish, raise, stabilize, or maintain the prices of coatings resins;

(B) allocate or divide the coatings resins business of any customer;

(C) allocate or divide coatings resins customers, territories, or markets;

(D) refrain from actively soliciting the coatings resins business of any customer or potential customer;

(E) submit any noncompetitive, collusive, or agreed-upon bids or quotations for coatings resins to any customer or potential customer.

V

Each defendant is enjoined and restrained from:

(A) Communicating to, requesting from, or exchanging with, any other defendant or any other coatings resins manufacturer any information concerning:

(1) the current or future prices, terms, or other conditions of sale for coatings resins by any coatings resins manufacturer, or any consideration or contemplation of changes therein;

(2) interest charges being or to be imposed for late payments by any customer or coatings resins;

(3) current or future drum differential charges to customers of coatings resins;

(4) current or future premium charges on any particular coatings resins;

(B) Complaining or otherwise commenting to any other coatings resins manufacturer concerning prices being or to be charged within the coatings resins industry, or those being or to be charged by that particular manufacturer.

VI

Nothing in Section V hereof shall:

(A) Prohibit the communication of prices, terms, or other conditions of sale or processing of coatings resins offered by a defendant to any other coatings resins manufacturer or offered by any other coatings resins manufacturer to a defendant in negotiating a purchase, sale, or contract for the processing of coatings resins, or other *bona fide* business transaction between that defendant and such other coatings resins manufacturer; or

(B) Be deemed to prohibit a defendant from entering into, participating, in, or maintaining with any other person an otherwise lawful joint venture agreement.

VII

Each defendant is ordered and directed to:

(A) Furnish a copy of this Final Judgment to each of its directors and to each of its officers, employees or agents who has any responsibility for the pricing or sale of coatings resins within sixty (60) days after the date of entry of this Final Judgment;

(B) Furnish a copy of this Final Judgment to each successor to those persons described in subsection (A) hereof within thirty (30) days after each such successor is employed;

(C) Obtain from each such person furnished a copy of this Final Judgment pursuant to subsections (A) and (B) hereof a signed receipt therefor, which receipt shall be retained in the defendant's files;

(D) Attach to each copy of this Final Judgment furnished pursuant to subsections (A) and (B) hereof a statement, in substantially the form set forth in Appendix A attached hereto, advising each person of his obligations and of such defendant's obligations under this Final Judgment, and of the criminal penalties which may be imposed upon him and upon such defendant for violation of this Final Judgment;

(E) Hold, within seventy-five (75) days after the date of entry of this Final Judgment, a meeting or meetings of the persons described in subsection (A) hereof, at which meeting such persons shall be instructed concerning the defendant's and their obligations under this Final Judgment. Similar meetings shall be held at least once a year for a period of five (5) years from the date of entry of this Final Judgment, which meetings shall also be attended by those persons described in subsection (B) hereof;

(F) Establish and implement a plan for monitoring compliance by the persons described in subsections (A) and (B) hereof with the terms of the Final Judgment; and

(G) File with this Court and serve upon the plaintiff within ninety (90) days after the date of entry of this Final Judgment, an affidavit as to the fact and manner of such defendant's compliance with subsections (A), (C), (D) and (E) hereof.

VIII

Each defendant shall require, as a condition of the sale or other disposition of all, or substantially all, of the assets of its coatings resins business that the acquiring party agree to be bound by the provisions of this Final Judgment. The acquiring party shall file with the Court and serve upon the

plaintiff its consent to be bound by this Final Judgment.

IX

For the purpose of determining or securing compliance with this Final Judgment and subject to any legally recognized privilege:

(A) Duly authorized representatives of the Department of Justice shall, upon written request of the Attorney General or of the Assistant Attorney General in charge of the Antitrust Divsion, and on reasonable notice to any defendant made to its principal office, be permitted:

(1) Access during the office hours of such defendant to inspect and copy all books, ledgers, accounts, correspondence, memoranda, and other records and documents in the possession or under the control of such defendant, who may have counsel present, relating to any matters contained in the this Final Judgment; and

(2) Subject to the reasonable convenience of such defendant and without restraint or interference from it, to interview officers, employees, and agents of such defendant, who may have counsel present, regarding any such matters.

(B) Upon the written request of the Attorney General or of the Assistant Attorney General in charge of the Antitrust Division made to the defendant's principal office, such defendant shall submit such written reports, under oath if requested, with respect to any of the matters contained in this Final Judgment as may be requested.

No information or documents obtained by the means provided in this Section IX shall be divulged by any representative of the department of Justice to any person other than a duly authorized representative of the Executive Branch of the United States, except in the course of legal proceedings to which the United States is a party, or for the purpose of securing compliance with this Final Judgment, or as otherwise required by law.

(C) If at the time information or documents are furnished by a defendant to plaintiff, such defendant represents and identifies in writing the material in any such information or documents to which a claim of protection may be asserted under Rule 26(c)(7) of the Federal Rules of Civil Procedure, and said defendant marks each pertinent page of such material, "Subject to claim of protection under Rule 26(c)(7) of the Federal Rules of Civil Procedure," then 10 days notice shall be given by plaintiff to such defendant prior to divulging such material in any legal proceeding (other than a grand jury proceeding) to which that defendant is not a party.

X

Jurisdiction is retained by this Court for the purpose of enabling any of the parties to this Final Judgment to apply to this Court at any time for such further orders or directions as may be necessary or appropriate for the construction or carrying out of this Final Judgment, for the modification of any of the provisions hereof, for the enforcement of compliance herewith, and for the punishment of violations hereof.

XI

This Final Judgment shall terminate ten (10) years from the date of its entry.

XII

Entry of this Final Judgment is in the public interest.

Dated:

United States District Judge.

Appendix A

Notice

Re: *United States v. Ashland Oil, Inc.; Cargill, Inc.; Reichhold Chemicals, Inc.; and Reliance Universal, Inc.*

Civil Action No. C77-0342L(A) (W.D.Ky.).

Attached hereto is a copy of a Final Judgment entered ———, 1980 in the captioned case. We are required to provide this to you. You should read it carefully. The provisions of the Final Judgment contained in Sections IV and V apply to you. If you violate these provisions, you may subject the Company to a fine and you may also subject yourself to a fine and imprisonment.

U.S. District Court for the Western District of Kentucky at Louisville

United States of America, Plaintiff, v. *Ashland Oil, Inc.; Cargill, Incorporated; Reichhold Chemicals, Inc.; and Reliance Universal, Inc.*, Defendants.

Civil Action No. C 77-0342-L (A).

Filed: July 11, 1980.

Stipulation Concerning Final Judgment

Plaintiff, United States of America, and defendant, Ashland Oil, Inc., hereby stipulate that Section VII of the Final Judgment shall not apply to Ashland Oil, Inc., so long as Ashland Oil, Inc., does not manufacture or sell coatings resins, as defined in the Final Judgment.

Dated: July 11, 1980.

/s/ Edmund Round,

Counsel for the United States.

Ray S. Bolze,

Counsel for Ashland Oil, Inc.

United States District Judge.

U.S. District Court, for the Western District of Kentucky at Louisville

United States of America, Plaintiff, v. *Ashland Oil, Inc.; Cargill, Incorporated; Reichhold Chemicals, Inc.; and Reliance Universal, Inc.*, Defendants.

Civil No. C77-0342 l(A).

Judge Charles M. Allen.

Filed: July 11, 1980.

Competitive Impact Statement

Pursuant to Section 2 of the Antitrust Procedures and Penalties Act, 15 U.S.C. § 16(b)-(h), the United States files this Competitive Impact Statement relating to the proposed Final Judgment submitted for entry in this civil antitrust proceeding.

I

Nature and Purpose of the Proceeding

On July 22, 1977, the United States filed a civil antitrust Complaint alleging that four corporations had conspired to fix prices in violation of Section 1 of the Sherman Act, 15 U.S.C. § 1.

The Complaint alleges that, beginning in 1971 and continuing through November 1974, the defendants engaged in a combination and conspiracy to fix, raise, stabilize, and maintain the prices of coatings resins and to allocate among themselves the coatings resins business of certain of their major customers.

The Complaint seeks a judgment by the Court that the defendants engaged in an unlawful combination and conspiracy in restraint of trade in violation of the Sherman Act. It also asks that the Court perpetually enjoin and restrain the defendants from such activities in the future.

The defendants named in the Complaint are Ashland Oil, Inc. of Ashland, Kentucky; Cargill, Incorporated of Minneapolis, Minnesota; Reichhold Chemicals, Inc. of White Plains, New York; and Reliance Universal, Inc. of Louisville, Kentucky.

All the defendants in this action have previously pleaded *nolo contendere* to misdemeanor criminal charges concerning the same combination and conspiracy alleged in this action. Fines of $50,000 each were levied against Ashland Oil, Inc., Cargill, Incorporated, and Reichhold Chemicals, Inc. A fine of $40,000 was levied against Reliance Universal, Inc. This civil case had been held in abeyance until the criminal charges were resolved.

II

Description of the Practices Giving Rise to the Alleged Violation of the Antitrust Laws

For the purpose of this case, the Complaint defines "coatings resins" as alkyd, copolymer, and/or urethane resins. Coatings resins are used in the manufacture of paint and other protective and decorative coatings.

During the period covered by the Complaint, Ashland Oil, Inc., Cargill, Incorporated, and Reichhold Chemicals, Inc. manufactured and sold coatings resins throughout the United States. During the period covered by the Complaint, Reliance Universal, Inc. manufactured and sold coatings resins, other than urethane resins, throughout the United States, but principally in the area of the country east of the Mississippi River.

The Complaint alleges that the defendants engaged in an illegal combination and conspiracy beginning in 1971 and continuing thereafter through November 1974. That combination and conspiracy consisted of a continuing agreement, understanding, and concert of action among the defendants and co-conspirators to fix, raise, stabilize, and maintain the prices of coatings resins and to allocate among themselves the coatings resins business of certain of their major customers.

The Complaint alleges that the combination and conspiracy had the following effects, among others:

(A) prices for coatings resins were fixed, raised, stabilized, and maintained at artificial and noncompetitive levels;

(B) competition in the sale of coatings resins was restrained; and

(C) customers were deprived of the benefits of free and open competition in the market for coatings resins.

III

Explanation of the Proposed Final Judgment

The United States and the defendants have stipulated that the proposed Final Judgment may be entered by the Court at any time after compliance with the Antitrust Procedures and Penalties Act. The proposed Final Judgment states that it constitutes no admission by any party with respect to any issue of fact or law. Under the provisions of the Antitrust Procedures and Penalties Act, entry of the proposed Final Judgment is conditioned upon a determination by the Court that the proposed Judgment is in the public interest. Accordingly, Section XII of the proposed Final Judgment states that entry of this Judgment is in the public interest.

The proposed Final Judgment enjoins any direct or indirect renewal of the type of conspiracy alleged in the Complaint. Specifically, Section IV enjoins and restrains the defendants from entering into, adhering to, participating in, maintaining, furthering, enforcing, or claiming, either directly or indirectly, any rights under any contract, agreement, understanding, arrangement, plan, program, combination, or conspiracy with any other coatings resins manufacturer to:

(A) fix, establish, raise, stabilize, or maintain the prices of coatings resins;

(B) allocate or divide the coatings resins business of any customer;

(C) allocate or divide coatings resins customers, territories, or markets;

(D) refrain from actively soliciting the coatings resins business of any customer or potential customer;

(E) submit any noncompetitive, collusive, or agreed-upon bids or quotations for coatings resins to any customer or potential customer.

Section V further enjoins the defendants from communicating with each other or with any other coatings resins manufacturer about the prices or terms of sale of coatings resins. Specifically, the defendants are enjoined and restrained from:

(A) communicating to, requesting from, or exchanging with any other defendant or any other coatings resins manufacturer any information concerning:

(1) the current or future prices, terms, or other conditions of sale for coatings resins by any coatings resins manufacturer, or any consideration or contemplation of changes therein;

(2) interest charges being or to be imposed for late payments by any customer of coatings resins;

(3) current or future drum differential charges to customers of coatings resins;

(4) current or future premium charges on any particular coatings resins;

(B) complaining or otherwise commenting to any other coatings resins manufacturer concerning prices being or to be charged within the coatings resins industry, or those being or to be charged by that particular manufacturer.

Since manufacturers of coatings resins often sell coatings resins to one another as well as to makers of paint and other coatings, Section VI of the proposed Final Judgment permits *bona fide* buyer-seller communications between the defendants. Section VI also provides that Section V does not prohibit otherwise lawful joint venture agreements.

Section VII of the proposed Final Judgment orders the defendants to furnish a copy of the Final Judgment to each of their directors and each of their officers, employees, or agents who has any responsibility for the pricing or sale of coatings resins. Successors of those persons are also to be furnished a copy of the Judgment. Each copy of the Final Judgment so provided will have attached a statement informing the recipient that a violation of the Final Judgment could result in a fine for the company and a fine and imprisonment for the individual. Section VII also requires each defendant to hold a meeting every year for five years at which the persons listed above are instructed on their obligations and their company's obligations under the Final Judgment. The defendants are required to monitor the compliance of those persons.

Ashland Oil, Inc., is exempted from Section VII because it is no longer in the business of manufacturing or selling coatings resins. Ashland sold that business on December 11, 1978. The United States and Ashland Oil, Inc. have entered into a stipulation filed together with the proposed Final Judgment. That stipulation provides that, so long as Ashland Oil, Inc. does not manufacture or sell coatings resins, the provisions of Section VII will not apply to it. All other provisions of the proposed Final Judgment, including the injunctive provisions, will apply to Ashland Oil, Inc.

Section III of the proposed Final Judgment makes the Judgment applicable to each defendant and to the officers, directors, agents, employees, subsidiaries, successors, and assigns of each defendant, as well as all other persons in active concert or participation with any of them who have received actual notice of the Final Judgment. That Section exempts from the proposed Final Judgment the following:

(A) transactions or activities solely between a defendant and its directors, officers, employees, parent companies, or subsidiaries when acting in such capacity; and

(B) activities occurring outside the United States and not affecting the domestic or foreign commerce of the United States.

Section VIII requires that, if a defendant sells the assets of its coatings resins business, the purchaser must agree to be bound by the Final Judgment and must so inform the Court and the United States.

Section XI makes the Final Judgment effective for ten years from the date of its entry.

Standard provisions similar to those found in other antitrust Final Judgments entered by consent are contained in Section I (jurisdiction of the Court), Section IX (investigation and reporting requirements), and Section X (retention of jurisdiction by the Court).

It is anticipated that the relief provided by the proposed Final Judgment will have a salutory effect on competition in the coatings resins market. Not only have the defendants been enjoined from future collusive behavior, they are also required to provide copies of the Final Judgment to each of their directors and to each of their officers, employees, or agents who has any responsibility for the sale or pricing of coatings resins. In addition, those people must meet annually to be instructed about their responsibilities under the Judgment. It is anticipated that these provisions will reduce the possibility of future violations.

IV.—Remedies Available to Potential Private Plaintiffs

After entry of the proposed Final Judgment, any potential private plaintiff that might have been damaged by the alleged violation will retain the same right to sue for monetary damages and any other legal or equitable relief that it may have had if the Final Judgment had not been entered. The Final Judgement may not be used, however, as *prima facie* evidence in private litigation, pursuant to Section 5(a) of the Clayton Act, as amended, 15 U.S.C. § 16(a).

V.—Procedures Available for Modification of the Proposed Final Judgment

As provided by the Antitrust Procedures and Penalties Act, any person believing that the proposed Final Judgment should be modified may submit written comments within the 60-day period provided by the Act to John A. Weedon, Chief, Great Lakes Field Office, Antitrust Division, United States Department of Justice, 995 Celebrezze Federal Building, Cleveland, Ohio 44199 (telephone: 216-522-4070). These comments and the Department's responses to them will be filed with the Court and published in the Federal Register.

All comments will be given due consideration by the Department of Justice. The Department remains free to withdraw its consent to the proposed Final Judgment at any time prior to its entry if it should determine that some modification is necessary. Further, Section X of the proposed Judgment provides that the Court retains jurisdiction over this action for the life of the Final Judgment and that the parties may apply to the Court for such order as may be necessary or appropriate for the modification, interpretation, or enforcement of the Judgment after its entry.

VI.—Alternatives to the Proposed Final Judgment

The alternative to the proposed Final Judgment considered by the Antitrust Division was a full trial on the merits and on relief. The Division considers the proposed Judgment to be of sufficient scope and effectiveness to make a trial unnecessary, since it provides appropriate relief against the violations alleged in the Complaint.

VII.—Determinative Materials and Documents

No materials or documents were considered determinative by the United States in formulating the proposed Final Judgment. Consequently, none is being filed

pursuant to the Antitrust Procedures and Penalties Act, 15 U.S.C. § 16(b).

Respectfully submitted,

John A. Weedon, David F. Hils, *Attorneys Department of Justice.*

Edmund Round, Michael J. Keane, Theresa M. Majkrzak, *Attorneys, Department of Justice, Antitrust Division, 995 Celebrezze Federal Building, Cleveland, Ohio 44199, Telephone: (216) 522-4189.*

[FR Doc. 80-23610 Filed 8-5-80; 8:45 am]

BILLING CODE 4410-01-M

Office of the Attorney General

[Order No. 904-80]

Modifications to List of Bureau of Prisons Institutions

AGENCY: Department of Justice.

ACTION: Notice.

SUMMARY: Attorney General Order No. 646-76 (41 FR 14805) classifies and lists the various Bureau of Prisons Institutions. Order No. 649-76 (41 FR 19233), Order No. 842-79 (44 FR 44629), Order No. 854-79 (44 FR 58002), and Order No. 860-79 (44 FR 64922) amended the list published by Order No. 646-76. This order further modifies the list by redesignating the Federal Correctional Institution at Seagoville, Texas, as a Federal Prison Camp; by designating new Federal Correctional Institutions at Lake Placid, New York and at Otisville, New York; and by deleting El Paso, Texas, as a Federal Detention Center.

EFFECTIVE DATE: July 25, 1980.

FOR FURTHER INFORMATION CONTACT: Ira B. Kirschbaum, Assistant General Counsel, Bureau of Prisons, U.S. Department of Justice, 320 1st Street, NW., Washington, D.C. 20534 (202-724-3062).

By virtue of the authority vested in me by sections 4003, 4081 and 4082 of Title 18, United States Code, Attorney General Order No. 646-76, as amended, is further amended as follows:

Subparagraph B of Order No. 646-76 is amended to delete Seagoville, Texas, as a Federal Correctional Institution and to add Otisville, New York, and Lake Placid, New York, as Federal Correctional Institutions.

Subparagraph C of Order No. 646-76 is amended to add Seagoville, Texas, as a Federal Prison Camp.

Subparagraph F of Order No. 646-76 is amended to delete El Paso, Texas, as a Federal Detention Center.

Dated: July 25, 1980.

Benjamin R. Civiletti,

Attorney General.

[FR Doc. 80-23611 Filed 8-5-80; 8:45 am]

BILLING CODE 4410-01-M

Proposed Consent Decree and Action To Obtain Damages for Discharge of Pollutants by the City of Lenoir, N.C.

In accordance with Department policy, 28 CFR 50.7, 38 FR 19029, notice is hereby given that on March 17, 1980, a proposed consent decree in *United States of America* v. *City of Lenoir and State of North Carolina,* Civil Action No. St-C-79-29, was lodged with the United States District Court for the Western District of North Carolina, Statesville Division.

The consent decree imposes a civil penalty of $10,000 and requires the City to meet certain construction deadlines at the existing wastewater treatment facilities. The City is required to have its new wastewater treatment plant operational by June 1982.

The proposed consent decree may be examined at the Office of the United States Attorney for the Western District of North Carolina in Charlotte, North Carolina; at the Region IV office of the Environmental Protection Agency, Enforcement Division, 345 Courtland Street, NE., Atlanta, Georgia 30308; and at the Pollution Control Section, Land and Natural Resources Division of the Department of Justice, Room 1734, 9th and Pennsylvania Avenue, NW., Washington, D.C. 20530.

The Department of Justice will receive written comments relating to the proposed consent decree for a period of 30 days from the date of this notice, comments should be addressed to the Deputy Assistant Attorney General, Land and Natural Resources Division, Department of Justice, Washington, D.C. 20530, and should refer to *United States of America* v. *City of Lenoir and the State of North Carolina* (W.D.N.C., Civil Action ST-C-79-29; D.J. 90-5-1-1-895).

Angus MacBeth,

Deputy Assistant Attorney General, Land and Natural Resources Division.

[FR Doc. 80-23612 Filed 8-5-80; 8:45 am]

BILLING CODE 4410-01-M

Office of Attorney General

[AAG/A Order No. 53-80]

Privacy Act of 1974; New System of Records

Pursuant to the provisions of the Privacy Act of 1974 (5 U.S.C. 552a), notice is hereby given that the Department of Justice proposes to establish a new system of records to be maintained by the Drug Enforcement Administration (DEA). Further, in the Proposed Rules Section of today's Federal Register, DEA proposes to exempt the system, to the extent the information is subject to exemptions pursuant to 5 U.S.C. 552a(j) and (k), from the provisions of 5 U.S.C. 552a(c)(3) and (4), (d), (e)(1), (2) and (3), (e)(4)(G) and (H), (e)(5) and (8), (f), (g) and (H) pursuant to 5 U.S.C. 552a(j) and (k). the purpose of these exemptions is as follows:

(1) From (c)(3) because the release of the disclosure accounting for disclosure pursuant to the routine uses published for this system would permit the subject of a criminal investigation to obtain valuable information concerning the nature of that investigation and present a serious impediment to law enforcement.

(2) From subsection (c)(4) because an exemption is being claimed for subsection (d), and this subsection will therefor not be applicable.

(3) From subsection (d) because access to records contained in this system would alert a subject to the existence of investigation and thereby provide information to the subject which might enable him to avoid detection or apprehension, and present a serious impediment to law enforcement.

(4) From subsection (e)(1) because in the course of criminal investigations, DEA often detects violation of non-drug-related laws. In the interests of effective law enforcement, it is necessary that DEA retain all information obtained in criminal investigations because it can aid in establishing patterns of criminal activity and assist other law enforcement agencies that are charged with enforcing other segments of criminal law.

(5) From subsection (e)(2) because information collected to the greatest extent possible from the subject individual of a criminal investigation would provide the subject with valuable information which might preclude detection or apprehension of the subject individual.

(6) From subsection (e)(3) because the requirement that individuals supplying information be provided a form stating the requirements of subsection (e)(3) would constitute a serious impediment to law enforcement in that it could compromise the existence of a confidential investigation, reveal the identity of confidential sources of information and endanger the life or physical safety of confidential informants.

(7) From subsections (e)(4)(G) and (H) because this system of records is exempt from individual access pursuant to subsection (j) of the Privacy Act of 1974.

(8) From subsection (e)(5) because in the collection of information for law enforcement purposes it is impossible to

determine in advance what information is accurate, relevant, timely and complete. With the passage of time, seemingly irrelevant or untimely information may acquire new significance as further investigation brings new details to light and the accuracy of such information can only be determined in a court of law. The restrictions imposed by subsection (e)(5) would restrict the ability of trained investigators and intelligence analysts to exercise their judgment in reporting on investigations and impede the development of criminal intelligence necessary for effective law enforcement.

(9) From subsection (e)(8) because the individual notice requirements could present a serious impediment to law enforcement by interfering with DEA's ability to issue administrative techniques and procedures.

(10) From subsection (f) because this system has been exempted from the access provisions of subsection (d).

(11) From subsections (g) and (h) because this system is compiled for law enforcement purposes and has been exempted from the access provisions of subsections (d) and (f).

The Regional Automated Intelligence Data System (RAIDS) (JUSTICE/DEA-028) is a new system of records for which no public notice consistent with the provisions of 5 U.S.C. 552a(e)(4) has been published in the Federal Register.

5 U.S.C. 552a(e)(4) and (11) provide that the public be provided a 30-day period in which to comment; the Office of Management and Budget (OMB), which has oversight responsibility under the provisions of the Act, requires a 60-day period in which to review the system before it is implemented. Therefore, the public, OMB, and the Congress are invited to submit written comments on this system. Comments should be addressed to the Administrative Counsel, Justice Management Division, Department of Justice, 10th and Constitution Avenue, N.W., Room 1214, Washington, D.C. 20530. If no comments are received from either the public, OMB, or the Congress on or before October 6, 1980, the system will be implemented without further notice in the Federal Register, except that the final rule exempting the system will be published after 60 days. No oral hearings are contemplated.

A report of the proposed system has been provided to the Director, OMB, to the President of the Senate, and to the Speaker of the House of Representatives.

Dated: July 24, 1980.

William D. Van Stavoren,

Acting Assistant Attorney General for Administration.

Justice/DEA-028

SYSTEM NAME:

Regional Automated Intelligence Data System (RAIDS).

SYSTEM LOCATION:

Drug Enforcement Administration, 8400 NW 53rd Street, Miami, Florida 33166.

CATEGORIES OF INDIVIDUALS COVERED BY THE SYSTEM:

Individuals suspected of illicit narcotic trafficking.

CATEGORIES OF RECORDS IN THE SYSTEM:

Information extracted from DEA investigative reports.

AUTHORITY FOR MAINTENANCE OF THE SYSTEM:

The Comprehensive Drug Abuse Prevention and Control Act of 1970 (Pub. L. 91-513).

ROUTINE USES OF RECORDS MAINTAINED IN THE SYSTEM, INCLUDING CATEGORIES OF USERS AND THE PURPOSES OF SUCH USES:

Information contained in this system is provided to the following categories of users as a matter of routine use for law enforcement and regulatory purposes: (a) Other federal law enforcement and regulatory agencies; (b) State and local law enforcement and regulatory agencies; (c) Foreign law enforcement agencies with whom DEA maintains liaison; (d) The Department of Defense and military departments; (e) The Department of State; (f) United States intelligence agencies concerned with drug enforcement; (g) The United Nations; (h) The International Police Organization (Interpol); and (i) To individuals and organizations in the course of investigations to elicit information.

In addition, disclosures are routinely made to the following categories for the purposes stated: (a) To federal agencies for national security clearance purposes and to federal and state regulatory agencies responsible for the licensing or certification of individuals in the fields of pharmacy and medicine; (b) To the Office of Management and Budget, upon request, in order to justify the allocation of resources; (c) To state and local prosecutors for assistance in preparing cases concerning criminal and regulatory matters; and (d) To respondents and their attorneys for purposes of discovery, formal and informal, in the course of an adjudicatory, rulemaking, or other hearing held pursuant to the Controlled Substances Act of 1970.

Release of information to the news media: Information permitted to be released to the news media and the public pursuant to 28 CFR 50.2 may be made available from systems of records maintained by the Department of Justice unless it is determined that release of the specific information in the context of a particular case would constitute an unwarranted invasion of personal privacy.

Release of information to Members of Congress: Information contained in systems of records maintained by the Department of Justice, not otherwise required to be released pursuant to 5 U.S.C. 552, may be made available to a Member of Congress or staff acting upon the Member's behalf when the Member or staff requests the information on behalf of and at the request of the individual who is the subject of the record.

Release of information to the National Archives and Records Service: A record from a system of records may be disclosed as a routine use to the National Archives and Records Service (NARS) in records management inspection conducted under the authority of 44 U.S.C. 2094 and 2906.

POLICIES AND PRACTICES FOR STORING, RETRIEVING, ACCESSING, RETAINING, AND DISPOSING OF RECORDS IN THE SYSTEM.

STORAGE:

Records in the system are maintained on magnetic discs.

RETRIEVABILITY:

Information is retrieved by name of the subject and by various topical queries.

SAFEGUARDS:

The system is protected by both physical security and dissemination and access controls. The system is maintained in a secure DEA facility and protected by electronic means. Access to the computer is restricted by the assignment of unique input and query access codes to authorized DEA employees on a strict need-to-know basis.

RETENTION AND DISPOSAL:

Records in the system are currently maintained indefinitely.

SYSTEM MANAGER(S) AND ADDRESS:

Regional Director, DEA South Eastern Regional Office, 8400 N.W. 53rd Street, Miami, Florida 33166.

NOTIFICATION PROCEDURE:

Inquiries should be addressed to: Freedom of Information Unit, Drug

Enforcement Administration, 1405 I Street, NW, Washington, D.C. 20537.

RECORD ACCESS PROCEDURES:

Same as above.

CONTESTING RECORD PROCEDURES:

Same as above.

RECORD SOURCE CATEGORIES:

Records in the system consist entirely of information extracted from DEA investigative reports.

SYSTEMS EXEMPTED FROM CERTAIN PROVISIONS OF THE ACT:

The Attorney General has exempted this system from subsections (c) (3) and (4), (d), (e) (1), (2), and (3), (e)(4)(G) and (H), (e) (5) and (8), (f), (g) and (h) of the Privacy Act pursuant to 5 U.S.C. 552a (j) and (k). Rules have been promulgated in accordance with the requirements of 5 U.S.C. 553 (b), (c) and (e) and are being published in the Proposed Rules Section of today's Federal Register.

[FR Doc. 80-23695 Filed 8-5-80; 8:45 am]
BILLING CODE 4410-09-M

Drug Enforcement Administration

Controlled Substances; Proposed Aggregate Production Quotas for 1981; Schedules I and II

Section 306 of the Controlled Substances Act (21 U.S.C. 826) requires that the Attorney General establish aggregate production quotas for all controlled substances listed in Schedules I and II. This responsibility has been delegated to the Administrator of the Drug Enforcement Administration by § 0.100 of Title 28 of the Code of Federal Regulations.

The quotas are to provide adequate supplies of each substance for (1) the estimated medical, scientific, research, and industrial needs of the United States, (2) lawful export requirements, and (3) the establishment and maintenance of reserve stocks.

In determining the below listed proposed 1981 aggregate production quotas, the Administrator considered the following factors:

(1) Total actual 1979 and estimated 1980 and 1981 net disposal of each substance by all manufacturers.

(2) Projected trends in the national rate of net disposal of each substance.

(3) Estimates of inventories of each substance and of any substance manufactured from it, and trends in accumulation of such inventories.

(4) Projected demand as indicated by procurement quota applications which were filed pursuant to § 1303.12 of Title 21 of the Code of Federal Regulations.

Pursuant to § 1303.23(c) of Title 21 of the Code of Federal Regulations, the Administrator of the Drug Enforcement Administration will in early 1981 adjust individual manufacturing quotas allocated for the year based upon 1980 year-end inventory and actual 1980 disposition data supplied by quota applicants for each basic class of Schedule I or II controlled substance.

Based upon consideration of the above factors, the Administrator of the Drug Enforcement Administration hereby proposes that aggregate production quotas for 1981 for the following controlled substances, expressed in grams of anhydrous acid or base, be established as follows:

Basic class	Proposed 1981 quota
SCHEDULE I	
2,5-Dimethoxyamphetamine	13,500,000
SCHEDULE II	
Alphaprodine	60,000
Amobarbital	4,398,000
Amphetamine	1,253,000
Anileridine	121,000
Cocaine	1,600,000
Codeine (for sale)	51,996,000
Codeine (for conversion)	3,125,000
Desoxyephedrine (1,771,000 grams for the production of levodesoxyephedrine for use in a non-controlled, non-prescription product, and 200,000 grams for the production of methamphetamine)	1,971,000
Dihydrocodeine	1,145,000
Diphenoxylate	652,000
Ecgonine (for conversion)	1,200,000
Ethylmorphine	25,000
Fentanyl	3,000
Hydrocodone	856,000
Hydromorphone	106,500
Levorphanol	13,000
Meperidine	11,000,000
Methadone	1,190,000
Methadone Intermediate (4-cyano-2-dimethylamino-4,4-diphenylbutane)	1,700,000
Methaqualone	5,871,000
Methylphenidate	1,215,000
Mixed Alkaloids of Opium	17,000
Morphine (for sale)	878,000
Morphine (for conversion)	55,651,000
Opium (tinctures, extracts, etc. expressed in terms of USP powdered opium)	1,941,000
Oxycodone (for sale)	1,783,000
Oxycodone (for conversion)	10,000
Oxymorphone	4,000
Pentobarbital	17,000,000
Phenmetrazine	1,372,000
Phenylacetone	9,000,000
Secobarbital	6,516,000
Thebaine (for sale)	2,303,000
Thebaine (for conversion)	1,004,000

All interested persons are invited to submit their comments and objections in writing regarding this proposal. A person may object to or comment on the proposals relating to any one or more of the above mentioned substances without filing comments or objections regarding the others. Comments and objections should be submitted in quintuplicate to the Administrator, Drug Enforcement Administration, United States Department of Justice, Washington, D.C. 20537, Attention: DEA Federal Register Representative, and must be received by September 4, 1980. If a person believes that one or more issues raised by him warrant a full adversary-type hearing, he should so state and summarize the reasons for this belief.

In the event that comments or objections to this proposal raise one or more issues which the Administrator finds, in his sole discretion, warrant a full hearing, the Administrator shall order a public hearing in the Federal Register summarizing the issues to be heard and setting the time for the hearing (which shall not be less than 30 days after the date of the order).

Dated: July 25, 1980.

Peter B. Bensinger,

Administrator, Drug Enforcement Administration.

[FR Doc. 80-23623 Filed 8-5-80; 8:45 am]
BILLING CODE 4410-09-M

Office of Justice Assistance, Research and Statistics

National Advisory Committee for Juvenile Justice and Delinquency Prevention; Meeting

Notice is hereby given that the National Advisory Committee for Juvenile Justice and Delinquency Prevention (the Committee) will meet August 20–23, 1980, in Portland, Oregon. The meeting will be held at The Benson Hotel. The Meeting is open to the public.

The NAC Executive Committee will meet from 8:00 p.m. to 9:00 p.m. Wednesday, August 20th. The full Committee will be called to order at 9:00 a.m. August 21st by Chair C. Joseph Anderson. After a welcome address and a report by the Executive Committee,

Mr. Ira Schwartz, Administrator of the Office of Juvenile Justice and Delinquency Prevention (OJJDP) will give a report.

At 10:30 a.m., there will be a presentation by Committee members on Rules of Order. Following this at 10:40 a.m., a panel discussion on the issue of removal of children from adult jails will be held. Participants will include Judith Johnson of the National Coalition for Jail Reform, John Rector, former OJJDP Administrator, two young people previously or currently in the jurisdiction of the juvenile court system, and members of the OJJDP staff and programs.

From 12:00 noon to 1:30 p.m., the Committee will be recessed for lunch.

The Committee's four Subcommittees will meet from 1:30 p.m. to 8:00 p.m. that evening, focusing on review and finalization of their FY 81 workplan. The Subcommittee to Advise the Administrator of OJJDP will discuss Technical Assistance, OJJDP's FY 81 Program Plan and policy on continuation of grants.

The Concentration of Federal Effort Subcommittee will discuss the coordination of Federal programs for juveniles with particular emphasis on those within the Department of Education and OJJDP.

The Subcommittee to Advise the National Institute will consider its workplan for FY 81, review the NAC's position and recent research on aversion programs, discuss NIJJDP's training and assessment centers, and, discuss the status of the reanalysis of the recent UDIS research. Plans for a special meeting of the Subcommittee for the presentation of this reanalysis will be finalized.

The Standards Subcommittee will develop their workplan for FY 81 and discuss plans for the refinement and implementation of the NAC's Standards for Juvenile Justice.

On August 22, the Committee members and interested guests will be visiting various juvenile institutions and programs from 8:00 a.m. until 1:00 p.m., at which time the full Committee reconvenes.

Issues to be discussed for the rest of the day include: implementation of the NAC Standards for Juvenile Justice; definition of juveniles as all people under the age of 18; State Planning Agency alternatives for administering juvenile justice without LEAA; the Third Annual State Advisory Group Conference; report from the task force on Technical Assistance; the Committee's position on aversion programs; and site visits to juvenile institutions and programs.

There will be Public Commentary at 5:00 p.m., and the meeting will recess at 6:00 p.m.

On Saturday, August 23, the Committee will reconvene at 9:00 a.m. for Subcommittee reports. The Committee will discuss future agenda topics, the FY 81 Workplan and their Fifth Annual Report. An Executive Committee meeting will follow the 12:30 p.m. adjournment, and be concluded at 1:30 p.m.

For further information, contact Mr. James C. Shine, Executive Assistant and Special Counsel, Office of Juvenile Justice and Delinquency Prevention, Law Enforcement Assistance Administration, Department of Justice, 633 Indiana Avenue, N.W., Washington, D.C. 20531.

Ira M. Schwartz,

Administrator, Office of Juvenile Justice and Delinquency Prevention.

[FR Doc. 80-23586 Filed 8-5-80; 8:45 am]
BILLING CODE 4410-18-M

LEGAL SERVICES CORPORATION

Grants and Contracts

July 31, 1980.

The Legal Services Corporation was established pursuant to the Legal Services Corporation Act of 1974, Pub. L 93-355a, 88 Stat. 378, 42 U.S.C. 2996-2996*l*, as amended, Pub. L. 95-222 (December 28, 1977). Section 1007(f) provides: "At least thirty days prior to the approval of any grant application or prior to entering into a contract or prior to the initiation of any other project, the Corporation shall announce publicly . . . such grant, contract, or project. . . ."

The Legal Services Corporation hereby announces publicly that it is considering the grant application submitted by:

Anishinabe Legal Services, Inc., in Cass Lake, Minnesota, to serve Native Americans residing on or near Red Lake and White Earth Chippewa Reservations.

Interested persons are hereby invited to submit written comments or recommendations concerning the above application to the Regional Office of the Legal Services Corporation at:

Native American Desk, Legal Services Corporation, Denver Regional Office, 1726 Champa Street, Suite 500, Denver, Colorado 80202.

Clinton Lyons,

Director, Office of Field Services.

[FR Doc. 80-23584 Filed 8-5-80; 8:45 am]
BILLING CODE 6820-35-M

Grants and Contracts

July 31, 1980.

The Legal Services Corporation was established pursuant to the Legal Services Corporation Act of 1974, Pub. L. 93-355a, 88 Stat. 378, 42 U.S.C. 2996-2996*l*, as amended, Pub. L. 95-222 (December 28, 1977). Section 1007(f) provides: "At least thirty days prior to the approval of any grant application or prior to entering into a contract or prior to the initiation of any other project, the Corporation shall announce publicly . . . such grant, contract, or project. . . ."

The Legal Services Corporation hereby announces publicly that it is considering the grant application submitted by:

Neighborhood Legal Services in Hartford, Connecticut, to serve migrants in the states of Connecticut and Massachusetts.

Interested persons are hereby invited to submit written comments or recommendations concerning the above application to the Regional Office of the Legal Services Corporation at:

Legal Services Corporation, Boston Regional Office, 84 State Street, Room 520, Boston, Massachusetts 02109.

Clinton Lyons,

Director, Office of Field Services.

[FR Doc. 80-23583 Filed 8-5-80; 8:45 am]
BILLING CODE 6820-35-M

NUCLEAR REGULATORY COMMISSION

Availability of Fiscal Year 1981 Funds for Financial Assistance To Enhance Technology Advancement of Nuclear Energy Safety

AGENCY: U.S. Nuclear Regulatory Commission.

ACTION: Notice.

SUMMARY: The U.S. Nuclear Regulatory Commission, (NRC), Office of Nuclear Regulatory Research announces proposed availability of FY 1981 funds to support research necessary to provide a technology base to assess the safety of nuclear power operation, plant siting and waste disposal. The program includes, but is not limited to, support of basic and applied research to advance understanding of and contribute to the store of scientific knowledge applicable to the design, operation, siting, systems and subsystems performance of nuclear power and disposal of waste products resulting from nuclear power applications. Projects will be funded through grants or cooperative agreements.

EFFECTIVE DATE: Applications will be accepted throughout FY 1981.

ADDRESS: U.S. Nuclear Regulatory Commission, Division of Contracts, Washington, D.C. 20555.

FOR FURTHER INFORMATION CONTACT: The cognizant NRC program official for this program is Dr. John Larkins, telephone (301) 427-4344. The cognizant NRC grant official is Mr. Kellogg Morton, telephone (301) 427-4365.

SUPPLEMENTARY INFORMATION:

A. Scope and Purpose of This Announcement

Pursuant to Section 31.a and 141.b. of the Atomic Energy Act of 1954, as amended, the NRC, Office of Nuclear Regulatory Research proposes to support educational institutions, nonprofit institutions, state and local governments, or professional societies through providing funds for research necessary to provide a technology base to assess the safety of nuclear power operation, plant siting and waste disposal. The program includes, but is not limited to, support of basic and applied research to advance understanding of and contribute to the store of scientific knowledge applicable to the design, operation, siting, systems and subsystems performance of nuclear power and disposal of waste products resulting from nuclear power applications. In the selection of projects to be supported, preference is given to research which is concerned with scientific and technical information which advances the state-of-the-art. Research proposals in the following categories (but not limited to) are to be considered:

1. Nuclear Waste Research
2. Natural Hazards Research
3. Environmental Effects Research
4. Materials and Thermal Hydraulic Research

1. Nuclear Waste Research

The purposes of the research are to develop information and concepts in the applicability of the safe storage of nuclear waste. Research which undertakes to study the basic phenomena of nuclear waste material interaction with host rock in deep geologic environments will be considered. The research would include evaluation of the importance of slow processes such as solid state diffusion as compared to more rapid sorption processes. A more fundamental description of sorption processes and their role in retardation of radionuclide migration is required. A primary purpose of this effort is to stimulate the technical and research communities to apply their knowledge and skills to the development of methods for long-term predictions of the performance of nuclear waste repositories. The result will be an improved degree of confidence in the safety of nuclear waste disposal facilities. Key technical areas in resolving questions on the safe storage of nuclear waste are hydrogeology, geochemistry, evapotranspiration, infiltration, soil moisture. Area of interest also include non-invasive methods for measuring the parameters required for calculating groundwater flow, the unsaturated zone between the land surface and the water table (top of the saturated zone), predictive methods of precipitation and runoff plus temperature changes including those involving glacial advances and retreats, long-term prediction of flooding, hurricanes, tornados, earthquakes and other natural hazard occurrences, groundwater protection, random attenuation, stabilization of tailing, and other related engineering and physical sciences as they apply to increasing or verifying scientific knowledge contributing to the safety of short-term or long-term nuclear waste disposal considerations. Most of the information and concepts developed in these areas has focused on resource exploitation. A refocusing to consider extreme time periods and the confinement in deep geologic media will tap technical and scientific resources for evaluating the long-term performance of nuclear waste repositories.

The research information will be valuable to federal, state, local governments and private concerns in assessing the acceptability of waste storage sites and waste forms and containers.

2. Natural Hazards Research

The objective of this program is to understand and delineate natural hazards on a quantified basis in different regions of the country. The research will be used to advance scientific knowledge of the causes of earthquakes, tornadoes, floods, and severe weather, and to provide one of the bases for hazard prediction used by federal, state and local jurisdictions in mitigation planning, disaster assistance, and reviewing safety regulations for critical facilities (including nuclear facilities). The approach will be to monitor natural hazards activity in each region and to study empirically and theoretically the conditions which contribute to the generation of the natural hazards. Results of these activities will be integrated with previous results and with results being generated by other (non-NRC) projects to improve our ability to predict statistically the future recurrence of natural hazards by size in each region. Catalogs or reports of data will be distributed at appropriate intervals by the institutions, and reports of interpretations and conclusions will be printed and distributed by the NRC or will appear in technical journals.

3. Environmental Effects Research

The objective of this reseach is to advance the state-of-the-art in assessing environmental effects and related life sciences. The research should sharply define technical or scientific subjects related to environmental effects of facilities and activities. Present interest is focused on ecological effects or health effects which may be attributable to effluents from nuclear power stations.

The research information is expected to add and advance the state-of-the-art knowledge relating to siting, construction, operation, decommissioning of facilities and maintaining a safe working environment for workers and the public relative to radioactive materials, processes and practices.

Material and Thermal Hydraulic Research

The research is to identify and quantify the nature and rate of general material degradation. Degradation processes and mechanisms should be experimentally simulated and the results be interpreted with "first principles" of thermodynamics, interaction kinetics, and other applicable mechanics. The materials to be studies include those encompassing system and subsystem applications utilized with nuclear power generation. The state-of-the-art long prediction of material performance is largely based on phenomenological methods combined with statistical interpretation of data. This approach has been reasonably successful for the estimation of the life-time of the materials for a period of tens to a hundred years. However, much longer-term (say 1,000 years) prediction would require some fundamental understanding of material degradation and quantification of degradation rate and will lead to a better prediction of the life-time of these materials. Appropriate of various properties of the materials in the far-future is essential for the protection of public health and safety.

Assistance for thermal hydraulic research related to nuclear powerplant operations will also be supported. Recipient will advance and provide more complete understanding of the thermal hydraulic phenomena related to

reactor safety, such as the coolant behavior in the vessel and steam generator during off-normal transient conditions. Some important areas needing more fundamental knowledge are steam condensation and the effects of droplets, void fraction, and non-condensible gas on heat transfer rate.

The primary purpose will be to stimulate research to provide a technological base for the safety assessment to technologies used in nuclear power applications, and development of qualified professionals in the disciplines required for reactor safety evaluations and operations. The results of this program will be to increase public understanding relating to nuclear safety, to enlarge the fund of theoretical and practical knowledge and technical information, and ultimately to enhance the protection of the public health and safety.

B. Eligible Applicants

Educational institutions, nonprofit entities, state and local governments and professional societies are eligible to apply for financial assistance under this announcement.

C. Research Applications

A research application should describe (i) the objectives and scientific significance of the proposed research, (ii) the methodology proposed and its suitability, (iii) the qualifications of the investigators and the proposing organization, and (iv) the level of financial support required to perform the proposed effort.

Applications should be as brief and concise as is consistent with communication to the reviewers. Neither unduly elaborate applications nor voluminous supporting documentation is desired.

State and local governments shall submit proposals utilizing the standard forms specified in OMB Circular A-102, Attachment M. Nonprofit organizations and universities shall submit proposals utilizing the standard forms stipulated in OMB Circular A-110, Attachment M.

The format used for project applications should give a clear presentation of the proposed project and its relation to the specific objectives contained in this notice. Each application should follow the format outlined unless the NRC specifically authorize exceptions.

1. Cover Page. The cover page should be typed according to the following format (submit separate cover pages if the application is multi-institutional):

Title of Proposal—A descriptive phrase or other similar designation to assist in the identification of the project.

Location of organization submitting the application and identification of facility where work is to be performed.

Name of Principal Investigators:

Total Cost of Proposal:

Period of Proposal:

Organization or Institution and Department:

Required Signatures:

Principal Investigators:

Name _____

Date _____

Address _____

Telephone Number _____

Required Organization Approval:

Name _____

Date _____

Address _____

Telephone Number _____

Organization Financial Officer:

Name _____

Date _____

Address _____

Telephone Number _____

2. Project Description. Each application shall provide, in twenty pages or less, a complete and accurate description of the proposed project. This section should provide the basic information to be used in evaluation the proposal to determine its priority for funding.

Applicants must identify other proposed sources of financial support for a particular project.

The information provided in this section must be brief and specific. Detailed background information may be included as supporting documentation to the proposal.

The following format shall be used for the project description:

(a) Project Goals and Objectives.

The project's objectives must be clearly and unambiguously stated. The application should justify the project including the problems it intends to clarify and the developments it may stimulate.

(b) Project Outline.

The application should clearly define the tasks that are to be performed, the key events or milestones in accomplishing the task schedule, and the feasibility of achieving these events or milestones.

(c) Project Benefits.

The proposal should indicate the direct and indirect benefits that the project seeks to achieve and to whom these benefits will accrue.

(d) Project Management.

The proposal should described the physical facilities required for the conduct of the project. Further, the proposal should include brief biographical sketches of individuals responsible for planning the project.

(e) Project Costs.

Nonprofit organizations shall adhere to the cost principles set forth in OMB Circular A-122; Educational Institutions shall adhere to the cost principles set forth in OMB Circular A-21; and state and local Governments shall adhere to the cost principles set forth in Federal Management Circular 74-4.

The application must provide a detailed schedule of project costs, identifying in particular:

(1) Salaries and fringe benefits.

(2) Equipment (rental and purchased).

(3) Travel and per diem/subsistence in relation to the project.

(4) Publication costs.

(5) Other direct costs (specify)—e.g., supplies.

(6) Indirect costs (attached negotiated agreement/cost allocation plan).

(7) Total costs.

3. Supporting Documentation. The supporting documentation should contain any additional information that will strengthen the application.

D. Application Submission and Deadline

This program announcement is valid for the entire period of FY 1981 (from 10/1/80 to 9/30/81). Applications will be received during the entire period. Application submissions shall be in one signed original and six copies.

E. Funds

For fiscal year 1981, the U.S. Nuclear Regulatory Commission, Office of Nuclear Regulatory Research anticipates making about one and one-half million dollars available for funding the project(s) mentioned herein.

The NRC anticipates that approximately five to fifteen projects will be funded. Further, the NRC anticipates that its average support will be $100,000.00 to $200,000.00 per project.

F. Evaluation Process

All proposals received as a result of this announcement will be evaluated by an NRC review panel.

G. Evaluation Criteria

The award of NRC financial assistance is discretionary. Generally, projects are supported in order of merit to the extent permitted by available funds.

The principal criteria by which a research proposal is evaluated are (i) the technical adequacy of the investigators and their institutional base, (ii) the adequacy of the research design, (iii) the scientific significance of

their proposal, (iv) its utility or relevance, and (v) its implications for the scientific potential of the field. Criteria i, ii, and iii are emphasized. Criterion iv is primary invoked in the evaluation of applied research proposals, while Criterion v is invoked for each proposal as appropriate. In selecting among research proposals of substantially equal merit, consideration is given to such factors as geographic distribution and balance among the projects supported.

H. Disposition of Proposals

Notification of awards will be made by the Grants Officer. Organizations whose applications are unsuccessful will be so advised by the Grants Officer.

I. Applicability of OMB Circular A-95

The research areas described herein are national research programs and are not designed to meet the needs or to address problems of a particular state, area or locality and therefore do not come under the purview of OMB Circular A-95.

J. Application Instructions and Forms

Questions concerning the preceding information, copies of application forms, and applicable regulations shall be obtained from or submitted to: Grants Officer, U.S. Nuclear Regulatory Commission, Division of Contracts, Washington, D.C. 20555.

The address for hand-carried applications is: Grants Officer, U.S. Nuclear Regulatory Commission, 7915 Eastern Avenue, Room 392, Silver Spring, Md. 20901.

Nothing in this solicitation should be construed as committing the NRC to dividing available funds among all qualified applicants.

Dated at Washington, D.C., this 28th day of July 1980.

For the Nuclear Regulatory Commission.

Edward L. Halman,

Director, Division of Contracts, Office of Administration.

[FR Doc. 80-23605 Filed 8-5-80; 8:45 am]

BILLING CODE 7590-01-M

[Docket No. 50-409]

Dairyland Power Co-op.; (LaCrosse Boiling Water Reactor) Request for Hearing

Order

Dairyland Power Cooperative (Dairyland) currently operates the LaCrosse Boiling Water Reactor (LACBWR) under Provisional Operating License No. DPR-45. On February 25, 1980, the Director, Nuclear Reactor Regulation (Director), issued an Order to Show Cause regarding the design and operation of a dewatering system for this facility. The Order was based on the Director's conclusion that continued operation of the plant for an extended period of time may be potentially hazardous because the LACBWR site could be subject to liquefaction if the licensee—designated safe-shutdown earthquake were to occur. The order gave the licensee an opportunity to file a written answer, and also provided that "any other person whose interest may be affected by this Order" may request a hearing. 42 U.S.C. 22399.

On March 25, 1980 Dairyland submitted the "Licensee's Answer to Show Cause" which contained a contingent request for a hearing in the event that the staff did not consider the answer sufficient cause for not undertaking the steps outlined in the Show Cause Order. The staff is evaluating the licensee's answer to the Order and has requested Dairyland to provide additional information. Requests for a hearing have been received from Mr. Frederick M. Olsen, III of LaCrosse, Wisconsin (March 18, 1980) and Ms. Anne Morse for the Coulee Region Energy Coalition (March 19, 1980).

10 CFR 2.105(e) provides, among other things, that the Commission may designate an Atomic Safety and Licensing Board to rule on requests for a hearing. Accordingly, pursuant to the Atomic Energy Act of 1954, as amended, and 10 CFR Part 2 of the Commission's regulations, these requests for hearing shall be considered and ruled on by an Atomic Safety and Licensing Board composed of Charles Bechhoefer, Esq., Chairman, Dr. George C. Anderson, and Mr. Ralph S. Decker. If the Board determines that a hearing is required, the Board is instructed to conduct an adjudicatory hearing solely on contentions within the scope of the issues identified in the February 25, 1980, Order: (1) whether the licensee should submit a detailed design proposal for a site dewatering system; and (2) whether the licensee should make operational such a dewatering system as soon as possible after NRC approval of the system, but no later than February 25, 1981, or place the LACBWR in a safe cold shutdown condition.

It is so Ordered.[1]

Dated at Washington, D.C., this 29th day of July, 1980.

For the Commission.

Samuel J. Chilk,

Secretary of the Commission.

[FR Doc. 80-23604 Filed 8-5-80; 8:45 am]

BILLING CODE 7590-01-M

[1] Section 201 of the Energy Reorganization Act, 42 U.S.C. § 5841, provides that action of the Commission shall be determined by a "majority vote of the members present." Commissioner Gilinsky was not present when this Order was affirmed, but had previously voted by notation to approve this Order. Had Commissioner Gilinsky been present, he would have affirmed his prior vote. Accordingly, the formal vote of the Commission was 3-0 in favor of the Order.

[Docket No. STN 50-482-A]

Kansas Gas & Electric Co., Kansas City Power & Light Co., and Kansas Electric Power Cooperative, Inc.; Receipt of Information for Antitrust Review of Operating License Application

The Kansas Gas and Electric Company, acting for itself, Kansas City Power and Light Company and Kansas Electric Power Cooprative, Inc., filed information for Antitrust Review of an Operating License Application, dated May 6, 1980. This information was filed pursuant to § 2.101 of the Commission's rules and regulations and is in connection with the plans of Kansas Gas and Electric Company, Kansas City Power and Light Company and Kansas Electric Power Cooprative, Inc. to operate a pressurized water reactor located on a site in Coffey County, Kansas. This reactor has been designated as the Wolf Creek Generating Station, Unit No. 1.

The portion of the application filed contains antitrust information for review pursuant to NRC Regulatory Guide 9.3 to determine whether there have been any significant changes since the completion of the antitrust review at the construction permit stage.

On completion of staff antitrust review of the above-named application, the Director of Nuclear Reactor Regulation will issue an initial finding as to whether there have been "significant changes" under section 105c(2) of the Act. A copy of this finding will be published in the Federal Register and will be sent to the Washington and local public document room and to those persons providing comments or information in response to this notice. If the initial finding concludes that there have not been any significant changes, request for reevaluation may be submitted for a period of 60 days after the date of the Federal Register notice. The results of any reevaluation that are requested will also be published in the Federal Register and copies sent to the Washington and local public document room.

A copy of the information for Antitrust Review for Operating License

Application is available for public examination and copying for a fee at the Commission's Public Document Room, 1717 H Street NW., Washington, D.C. and at the local public document room in the Coffey County Courthouse, Burlington, Kansas 66839.

Any person who desires additional information regarding the matter covered by this notice or who wishes to have his views considered with respect to significant changes related to antitrust matters which have occurred in the licensee's activities since the construction permit antitrust review for the above-named plant should submit such requests for information or views to the U.S. Nuclear Regulatory Commission, Washington, D.C. 20555. Attention: Chief, Utility Finance Branch, Office of Nuclear Reactor Regulation, on or before September 22, 1980.

Dated at Bethesda, Md., this 10th day of July 1980.

For the Nuclear Regulatory Commission.

B. J. Youngblood,

Chief, Licensing Branch No. 1, Division of Licensing.

[FR Doc. 80-23158 Filed 7-22-80; 8:45 am]

BILLING CODE 7590-01-M

[Docket No. 50-321]

Georgia Power Co., et al.; Issuance of Amendment to Facility Operating License

The U.S. Nuclear Regulatory Commission (the Commission) has issued Amendment No. 77 to Facility Operating License No. DPR-57, issued to Georgia Power Company, Oglethorpe Power Corporation, Municipal Electric Authority of Georgia, and City of Dalton, Georgia, which revised Technical Specifications for operation of the Edwin I. Hatch Nuclear Plant, Unit No. 1 (the facility) located in Appling County, Georgia.

This amendment was authorized by phone on July 2, 1980. It revises the Tecnical Specifications for the High Pressure Coolant Injection (HPCI) System to permit continued operation with an inoperable HPCI for up to 14 days. The amendment also adds a Limiting Condition for Operation to cover the situation where the demonstration of operability of the HPCI cannot be performed due to low reactor steam pressure. These changes conform the Hatch 1 specifications with current licensing practices. The urgency associated with this action was (1) to permit the licensee to conduct a diagnostic and repair program as directed by the Commission's Office of Inspection and Enforcement, and (2) the current specifications for Hatch 1 were defective since they did not cover the situation of startup without a demonstration of operability of the HPCI system.

The application for the amendment complies with the standards and requirements of the Atomic Energy Act of 1954, as amended (the Act), and the Commission's rules and regulations. The Commission has made appropriate findings as required by the Act and the Commission's rules and regulations in 10 CFR Chapter I, which are set forth in the license amendment. Prior public notice of this amendment was not required since the amendment does not involve a significant hazards consideration.

The Commission has determined that the issuance of this amendment will not result in any significant environmental impact and that pursuant to 10 CFR 51.5(d)(4) an environmental impact statement or negative declaration and environmental impact appraisal need not be prepared in connection with issuance of this amendment.

For further details with respect to this action, see (1) the application for amendment dated July 2, 1980, (2) the Commission's letter to the licensee dated July 3, 1980, (3) Amendment No. 77 to License No. DPR-57 and (4) the Commission's related Safety Evaluation. All of these items are available for public inspection at the Commission's Public Document Room, 1717 H Street, N.W., Washington, D.C. and at the Appling County Public Library, Parker Street, Baxley, Georgia 31513. A copy of items (2), (3) and (4) may be obtained upon request addressed to the U.S. Nuclear Regulatory Commission, Washington, D.C. 20555, Attention: Director, Division of Licensing.

Dated at Bethesda, Maryland, this 28th day of July 1980.

For the Nuclear Regulatory Commission.

Robert W. Reid,

Chief, Operating Reactors Branch No. 4, Division of Licensing.

[FR Doc. 80-23002 Filed 8-5-80; 8:45 am]

BILLING CODE 7590-01-M

[Docket No. 50-289]

Metropolitan Edison Co., et al.; Issuance of Amendment to Facility Operating License

The U.S. Nuclear Regulatory Commission (the Commission) has issued Amendment No. 56 to Facility Operating License No. DPR-50, issued to Metropolitan Edison Company, Jersey Central Power and Light Company, and Pennsylvania Electric Company (the licensee) for operation of the Three Mile Island Nuclear Station, Unit No. 1 (the facility) located in Londonderry Township, Dauphin County, Pennsylvania. The amendment is effective as of its date of issuance.

The amendment revises the Technical Specifications to allow the overpressure mitigating system as modified to protect the reactor vessel against overpressure during low temperature conditions.

The application for the amendment complies with the standards and requirements of the Atomic Energy Act of 1954, as amended (the Act), and the Commission's rules and regulations. The Commission has made appropriate findings as required by the Act and the Commission's rules and regulations in 10 CFR Chapter I, which are set forth in the license amendment. Prior public notice of this amendment was not required since the amendment does not involve a significant hazards consideration.

The Commission has determined that the issuance of this amendment will not result in any significant environmental impact and that pursuant to 10 CFR 51.5(d)(4) an environmental impact statement, or negative declaration and environmental impact appraisal need not be prepared in connection with issuance of this amendment.

For further details with respect to this action, see (1) the application for amendment dated March 13, 1978, as supplemented March 13, 1978, (2) Amendment No. 56 to License No. DPR-50, and (3) the Commission's related Safety Evaluation. All of these items are available for public inspection at the Commission's Public Document Room, 1717 H Street, N.W., Washington, D.C. and at the Government Publications Section, State Library of Pennsylvania, Box 1601 (Education Building), Harrisburg, Pennsylvania. A copy of items (2) and (3) may be obtained upon request addressed to the U.S. Nuclear Regulatory Commission, Washington, D.C. 20555, Attention: Director, Division of Licensing.

Dated at Bethesda, Maryland, this 28th day of July 1980.

For the Nuclear Regulatory Commission.

Robert W. Reid,

Chief, Operating Reactors Branch No. 4, Division of Licensing.

[FR Doc. 80-23001 Filed 8-6-80; 8:45 am]

BILLING CODE 7590-01-M

[Docket No. 50-285]

Omaha Public Power District; Issuance of Amendment To Facility Operating License

The U.S. Nuclear Regulatory Commission (the Commission) has

issued Amendment No. 49 to Facility Operating License No. DPR-40 issued to Omaha Public Power District (the licensee), which revised the Technical Specifications for operation of the Fort Calhoun Station, Unit No. 1, located in Washington County, Nebraska. The amendment is effective as of its date of issuance.

This amendment changes the Technical Specifications to remove the requirement to cycle certain non-redundant pumps and valves and adds requirements for ensuring the availability of auxiliary feedwater.

The application for the amendment complies with the standards and requirements of the Atomic Energy Act of 1954, as amended (the Act), and the Commission's rules and regulations. The Commission has made appropriate findings is required by the Act, and the Commission's rules and regulations in 10 CFR Chapter I, which are set forth in the license amendment. Prior public notice of this amendment was not required since the amendment does not involve a significant hazards consideration.

The Commission has determined that the issuance of this amendment will not result in any significant environmental impact and that pursuant to 10 CFR 51.5(d)(4) an environmental impact statement, or negative declaration and environmental impact appraisal need not be prepared in connection with the issuance of this amendment.

For further details with respect to this action, see (1) the licensee's submittals dated July 5, 1979 and May 12, 1980, as supplemented May 14, 1980, (2) Amendment No. 49 to License No. DPR-40, and (3) the Commission's related Safety Evaluation. All of these items are available for public inspection at the Commission's Public Document Room, 1717 H Street, N.W., Washington, D.C., and at the W. Dale Clark Library, 215 South 15th Street, Omaha, Nebraska. A copy of items (2) and (3) may be obtained upon request addressed to the U.S. Nuclear Regulatory Commission, Washington, D.C. 20555, Attention: Director, Division of Licensing.

Dated at Bethesda, Maryland, this 25th day of July, 1980.

For the Nuclear Regulatory Commission.

Robert A. Clark,

Chief, Operating Reactors Branch No. 3, Division of Licensing.

[FR Doc. 80-23606 Filed 8-5-80; 8:45 am]

BILLING CODE 7590-01-M

[Docket No. 50-346]

The Toledo Edison Co. and The Cleveland Electric Illuminating Co.; Issuance of Amendment to Facility Operating License

The U.S. Nuclear Regulatory Commission (the Commission) has issued Amendment No. 28 to Facility Operating License No. NPF-3, issued to The Toledo Edison Company and The Cleveland Electric Illuminating Company (the licensees), which revised the license and Technical Specifications for operation of the Davis-Besse Nuclear Power Station, Unit No. 1 (the facility) located in Ottawa County, Ohio. The amendment is effective as of its date of issuance.

This amendment revises the Technical Specification setpoint for the automatic closure of the decay heat removal system isolation valves, and implements a pessurizer heater interlock which deenergizes the heaters if reactor coolant system pressurization is attempted and both decay heat removal system isolation valves are not closed. This action satisfies the requirements of license conditions 2.C.(3)(d) and 2.C.(3)(j). In addition, the amendment adds a new condition to the license which requires, prior to operation beyond five effective full power years, the Toledo Edison Company to provide a reanalysis and proposed modifications, as necessary, to ensure continued means of protection against low temperature reactor coolant system overpressure events. Therefore, license condition 2.C.(3)(d) is replaced with the above new requirement and condition 2.C.(3)(j) is removed from the license.

The application for the amendment complies with the standards and requirements of the Atomic Energy Act of 1954, as amended (the Act), and the Commission's rules and regulations. The Commission has made appropriate findings as required by the Act and the Commission's rules and regulations in 10 CFR Chapter I, which are set forth in the license amendment. Prior public notice of this amendment was not required since the amendment does not involve a significant hazards consideration.

The Commission has determined that the issuance of this amendment will not result in any significant environmental impact and that pursuant to 10 CFR 51.5(d)(4) an environmental impact statement or negative declaration and environmental impact appraisal need not be prepared in connection with the issuance of this amendment.

For further details with respect to this action, see (1) the application for amendment dated March 20, 1978, (2) Amendment No. 28 to License No. NPF-3, and (3) the Commission's related Safety Evaluation. All of these items are available for public inspection at the Commission's Public Document Room, 1717 H Street, N.W., Washington, D.C., and at the Ida Rupp Public Library, 310 Madison Street, Port Clinton, Ohio. A copy of items (2) and (3) may be obtained upon request addressed to the U.S. Nuclear Regulatory Commission, Washington, D.C. 20555, Attention: Director, Division of Licensing.

Dated at Bethesda, Maryland, this 25th day of July 1980.

For The Nuclear Regulatory Commission.

Robert W. Reid,

Chief, Operating Reactors Branch No. 4, Division of Licensing.

[FR Doc. 80-23603 Filed 8-5-80; 8:45 am]

BILLING CODE 7590-01-M

Advisory Committee on Reactor Safeguards; Subcommittee on Reactor Fuel; Meeting

The ACRS Subcommittee on Reactor Fuel will hold a meeting on August 21, 1980 at the Westbank Motel Coffee Shop, 475 River Parkway, Idaho Falls, ID to continue its review of the NRC Fuel Behavior Research Branch (FBRB) Programs for the annual ACRS reports to NRC and Congress. Notice of this meeting was published July 25, 1980.

In accordance with the procedures outlined in the Federal Register on October 1, 1979 (44 FR 56408), oral or written statements may be presented by members of the public, recordings will be permitted only during those portions of the meeting when a transcript is being kept, and questions may be asked only by members of the Subcommittee, its consultants, and Staff. Persons desiring to make oral statements should notify the Designated Federal Employee as far in advance as practicable so that appropriate arrangements can be made to allow the necessary time during the meeting for such statements.

The entire meeting will be open to public attendance.

The agenda for subject meeting shall be as follows:

Thursday, August 21, 1980, 8:30 a.m. until the conclusion of business.

During the initial portion of the meeting, the Subcommittee, along with any of its consultants who may be present, will exchange preliminary views regarding matters to be considered during the balance of the meeting.

The Subcommittee will then hear presentations by and hold discussions with representatives of the NRC Staff,

their consultants, and other interested persons regarding this review.

Further information about topics to be discussed, whether the meeting has been cancelled or rescheduled, the Chairman's ruling on requests for the opportunity to present oral statements and the time allotted therefor can be obtained by a prepaid telephone call to the cognizant Designated Federal Employee, Mr. Paul Boehnert (telephone 202/634-3267) between 8:15 a.m. and 5:00 p.m., EDT.

Dated: July 31, 1980.

Samuel J. Chilk,

Secretary of the Commission.

[FR Doc. 80-23607 Filed 8-5-80; 8:45 am]

BILLING CODE 7590-01-M

Draft Regulatory Guide; Issuance and Availability

The Nuclear Regulatory Commission has issued for public comment a draft of a new guide planned for its Regulatory Guide Series together with a draft of the associated value/impact statement. This series has been developed to describe and make available to the public methods acceptable to the NRC staff of implementing specific parts of the Commission's regulations and, in some cases, to delineate techniques used by the staff in evaluating specific problems of postulated accidents and to provide guidance to applicants concerning certain of the information needed by the staff in its review of applications for permits and licenses.

The draft guide, temporarily identified by its task number, FP 818-4 (which should be mentioned in all correspondence concerning this draft guide), is entitled "Standard Format and Content of License Applications, Including Environmental Reports, for In Situ Uranium Solution Extraction" and is intended for Division 3, "Fuels and Materials Facilities." It is being developed to provide specific guidance on the format and content of an application, including an environmental report, for a commercial-scale in situ uranium extraction facility license.

This draft guide and the associated value/impact statement are being issued to involve the public in the early stages of the development of a regulatory position in this area. They have not received complete staff review and do not represent an official NRC staff position.

Public comments are being solicited on both drafts, the guide (including any implementation schedule) and the draft value/impact statement. Comments on the draft value/impact statement should be accompanied by supporting data. Comments on both drafts should be sent to the Secretary of the Commission, U.S. Nuclear Regulatory Commission, Washington, D.C. 20555, Attention: Docketing and Service Branch, by September 30, 1980.

Although a time limit is given for comments on these drafts, comments and suggestions in connection with (1) items for inclusion in guides currently being developed or (2) improvements in all published guides are encouraged at any time.

Regulatory guides are available for inspection at the Commission's Public Document Room, 1717 H Street NW., Washington, D.C. Requests for single copies of draft guides (which may be reproduced) or for placement on an automatic distribution list for single copies for future draft copies in specific divisions should be made in writing to the U.S. Nuclear Regulatory Commission, Washington, D.C. 20555, Attention: Director, Division of Technical Information and Document Control. Telephone Requests cannot be accommodated. Regulatory guides are not copyrighted, and Commission approval is not required to reproduce them.

(5 U.S.C. 552(a))

Dated at Rockville, Maryland, this 28th day of July 1980.

For the Nuclear Regulatory Commission.

Guy A. Arlotto,

Director, Division of Engineering Standards, Office of Standards, Development.

[FR Doc. 80-23600 Filed 8-5-80; 8:45 am]

BILLING CODE 7590-01-M

SMALL BUSINESS ADMINISTRATION

[Proposed License No. 10/10-0172]

First Oregon Capital Corp.; Application for a License as a Small Business Investment Company

Notice is hereby given of the filing of an application with the Small Business Administration pursuant to § 107.102 of the SBA Regulations (13 CFR 107.102 (1980)), by First Oregon Capital Corporation, 219 S.W. Stark Street, Portland, Oregon 97204 for a license to operate as a small business investment company (SBIC) under the provisions of the Small Business Investment Act of 1958, (the Act), as amended (15 U.S.C. 661 et seq.).

The proposed officers, directors and stockholders are:

Name and Address, Title, and Percent of Ownership

James M. Pippin, 2775 Old Orchard Road, Portland, Oregon 97201, President, General Manager, 50 percent.

Daniel R. Adams, 1905 Pallisades Terrace, Lake Oswego, Oregon 97034, Secretary-Treasurer, Director, 50 percent.

Le Roy E. Larsen, 3980 N.W. 192nd Street, Portland, Oregon 97229, Vice President, Director.

The Applicant proposes to begin operations with a capitalization of $500,000 and will be a source of both equity capital and long term loan funds for qualified small business concerns. However, it will emphasize equity investments with particular attention to growth potential.

Matters involved in SBA's consideration of the application include the general business reputation and character of the proposed owners and management, and the probability of successful operations of the new company under their management, including adequate profitability and financial soundness, in accordance with the Act and Regulations.

Notice is further given that any person may, not later than 15 days from the date of publication of this Notice, submit written comments on the proposed SBIC to the Associate Administrator for Investment, Small Business Administration, 1441 "L" Street, N.W., Washington, D.C. 20416.

A copy of this Notice will be published in a newspaper of general circulation in Portland, Oregon.

(Catalog of Federal Domestic Assistance Program No. 59.011, Small Business Investment Companies)

Dated: July 30, 1980.

Michael K. Casey,

Associate Administrator for Investment.

[FR Doc. 80-23672 Filed 8-5-80; 8:45 am]

BILLING CODE 8025-01-M

[Proposed License No. 09/09-0266]

PBC Venture Capital, Inc.; Application for a License as a Small Business Investment Company

Notice is hereby given of the filing of an application with the Small Business Administration pursuant to § 107.102 of the SBA Regulations (13 CFR 107.102 (1980)), by PBC Venture Capital, Inc., 1408 18th Street, Bakersfield, California 93301 for a license to operate as a small business investment company (SBIC) under the provisions of the Small Business Investment Act of 1958, (the Act), as amended (15 U.S.C. 661 et seq.).

The proposed officers, directors and stockholders are:

Name and Address, Title, and Percent of Ownership

Phillip E. Zachary, 635 Sycamore Avenue, Shafter, California 93263, President, General Manager and Director

Edward J. Biebrich, Jr., 605 Bobwhite Court, Bakersfield, California 93309, Vice President, Chief Financial Officer, and Director

Jo Ann C. Murphy, 408 Electra Avenue, Bakersfield, California 93309, Vice President, Secretary and Director

George C. Barstow, 1316 Lymric Way, Bakersfield, California 93309, Vice President and Director

Kenneth W. Jones, 4200 Boise, Bakersfield, California 93306, Director

Edwards C. Fant, 3000 College Avenue, Bakersfield, California 93306, Director

Charles E. Smith, 3805 Century Drive, Bakersfield, California 93306, Director

Pacific Bancorporation, 1810 Chester Avenue, Bakersfield, California 93386, 36.4 percent ownership of the SBIC

Community First Bank, 1810 Chester Avenue, Bakersfield, California 93386, 63.8 percent ownership of the SBIC

PBC Venture Capital, Inc., is a jointly-wned subsidiary of Pacific Bancorporation (PBC), a one-bank holding company, and Community First Bank (CFB), a California state-chartered commercial bank. CFB has 81 shareholders and is 97.3 percent owned by PBC. PBC has 2,016 shareholders and C. Wesley Buerkle is the only owner of 10 or more percent of PBC's outstanding stock.

The Applicant will use the services of National Investment Management, Inc. (NIM), as its investment manager. NIM's President is Richard D. Robins and it is located at 3838 Carson Street, Torrance, California 90503.

The Applicant proposes to begin operations with a capitalization of $540,000 and will be a source of equity capital and unsecured long term loan funds for qualified small business concerns.

Matters involved in SBA's consideration of the application include the general business reputation and character of the proposed owners and management, and the probability of successful operations of the new company under their management, including adequate profitability and financial soundness, in accordance with the Act and Regulations.

Notice is further given that any person may, not later than 15 days from the date of publication of this Notice, submit written comments on the proposed SBIC to the Associate Administrator for Investment, Small Business Administration, 1441 "L" Street, N.W., Washington, D.C. 20416.

A copy of this Notice will be published in a newspaper of general circulation in Bakersfield, California.

(Catalog of Federal Domestic Assistance Program No. 59.011, Small Business Investment Companies)

Dated: July 30, 1980.

Michael K. Casey,

Associate Administrator for Investment.

[FR Doc. 80-23671 Filed 8-5-80; 8:45 am]

BILLING CODE 8025-01-M

[Proposed License No. 06/06-0234]

Southwestern Venture Capital of Texas, Inc.; Application for a License To Operate as a Small Business Investment Company

Notice is hereby given that an application has been filed with the Small Business Administration pursuant to § 107.102 of the Regulations governing small business investment companies (13 CFR 107.102 (1980)), under the name of Southwestern Venture Capital of Texas, Inc., 108 La Plaza Building, 113 S. River St., Seguin, Texas 78155, for a license to operate as a small business investment company (SBIC) under the provisions of the Small Business Investment Act of 1958, as amended (the Act), (15 U.S.C. 661 *et seq.*), and the Rules and Regulations promulgated thereunder.

The proposed officers, directors and ten-or-more percent shareholders of the Applicant are as follows:

James A. Bettersworth, Rt. 4, Box 473 AA, Seguin, Texas 78155; President, General Manager, Director, 2.5 percent shareholder.

Joe A. Mueller, Rt. 4, Box 433-A, Seguin, Texas 78155; Vice President, Director, 2.5 percent shareholder.

John Donegan, 1901 Mt. Vernon, Seguin, Texas 78155; Secretary, Treasury, Director.

Benton Donegan, 355 Voges Lane, Seguin, Texas 78155; Director.

J. B. McKean, Rt. 4, Box 338, Seguin, Texas 78155; Director, 7.5 percent shareholder.

Emmett Donegan, Rt. 1, Box 70, Seguin, Texas 78155; Director, 2.5 percent shareholder.

The First National Bank of Seguin, Texas; 15.0 percent shareholder.

There will be one class of stock authorized: 500,000 shares of no par common stock. Initially 100,100 shares will be issued with a resultant private captial of $1,001,000. Applicant proposes to conduct its operations principally in the State of Texas.

Matters involved in SBA's consideration of the application include the general business reputation and character of shareholders and management, and the probability of successful operation of the new company in accordance with the Act and Regulations.

Notice is further given that any person may, not later than 15 days from the date of publication of this notice, submit to SBA, in writing, comments on the proposed licensing of this company. Any such communications should be addressed to: Associate Administrator for Investment, Small Business Administration, 1441 "L" Street, N.W., Washington, D.C. 20416.

A copy of this notice shall be published by the Applicant in a newspaper of general circulation in Seguin, Texas.

(Catalog of Federal Domestic Assistance Program No. 59.011, Small Business Investment Companies)

Dated: July 30, 1980.

Michael K. Casey,

Associate Administrator for Investment.

[FR Doc. 80-23673 Filed 8-5-80; 8:45 am]

BILLING CODE 8025-01-M

[Declaration of Disaster Loan Area No. 1881]

Oklahoma; Declaration of Disaster Loan Area

The following 6 counties and adjacent counties within the State of Oklahoma constitute a disaster area as a result of natural disaster as indicated:

County	Natural disaster(s)	Date(s)
Canadian	Wind, hail, heavy rain	May 17, 1980.
Custer	Hail	May 17, 20, 1980.
Harmon	Excessive rainfall, flooding, high winds, hail.	May 15, 27, 29, 1980.
Jackson	Excessive rainfall, flooding, high winds, hail.	May 15, 27, 29, 1980.
Pottawatomie	Hail, high wind, excessive rainfall.	May 17, 18, 1980.
Roger Mills	Tornado, hail, flood	May 28, 1980.

Eligible persons, firms and organizations may file applications for loans for physical damage until the close of business on January 28, 1981, and for economic injury until the close of business on April 28, 1981, at: Small Business Administration, District Office, 200 N.W. 5th Street—Suite 670, Federal Building, Oklahoma City, Oklahoma 73102, or other announced locations.

(Catalog of Federal Domestic Assistance Program Nos. 59002 and 59008)

Dated: July 28, 1980.

A. Vernon Weaver,

Administrator.

[FR Doc. 80-23674 Filed 8-5-80; 8:45 am]

BILLING CODE 8025-01-M

DEPARTMENT OF THE TREASURY

Office of the Secretary

Advisory Committee on the International Monetary System; Notice of Continuation

Pursuant to the Federal Advisory Committee Act of October 6, 1972 (Pub. L. 92-463, 86 Stat. 770-776, 5 U.S.C. App. I, Supp. II), the Department of the Treasury announces the continuation of the following advisory committee:

Title: The Advisory Committee on the International Monetary System.

Purpose: The Committee, composed of representatives from banking, industry, labor and the academic community, as well as former government officials, discusses major issues concerning the effective functioning of the international monetary system now and in the future, and potential areas for improvement, advising the Secretary of the Treasury on these questions in the International Monetary Fund and in other forums.

Statement of Public Interest: The United States is and will continue to be engaged in discussions and negotiations on a number of key issues related to the operation and evolution of the international monetary system pursuant to the amended IMF Articles of Agreement (the amended Articles entered into force on April 1, 1978), including: development of the IMF's role in surveillance over exchange arrangements and the balance of payments adjustment process; the IMF's role in balance of payments financing during a period of unprecedented payments imbalances; the evolution of the roles of the dollar, other currencies and the Special Drawing Right in the international monetary system; and questions related to decisions on the appropriate level of IMF resources and on allocations of Special Drawing Rights. It is important that the Secretary of the Treasury continue to be able to receive the advice and recommendations of the Advisory Committee in this period as the United States develops positions on these issues. The depth and breadth of the members' experience in international monetary affairs cannot be duplicated from sources within the Treasury nor from another existing advisory committee.

Authority for this committee will expire August 21, 1982, unless the Secretary of the Treasury formally determines that continuance is in the public interest.

Dated: July 20, 1980.

C. Fred Bergsten,

Assistant Secretary (International Affairs).

[FR Doc. 80-23428 Filed 8-5-80; 8:45 am]

BILLING CODE 4810-25-M

[General Counsel Order No. 23 (Revised)]

Appointment of Substitute Member to the Legal Division Performance Review Board for Review of Deputy General Counsel

I hereby appoint William E. Douglas to replace Richard J. Davis on the Performance Review Board established by General Counsel Order No. 23.

Effective Date: July 31, 1980.

Robert H. Mundheim,

General Counsel.

[FR Doc. 80-23411 filed 8-5-80; 8:45 am]

BILLING CODE 4810-25-M

COUNCIL ON WAGE AND PRICE STABILITY

Pay Advisory Committee; Cancellation of Meeting

Announced Time and Place of Meeting: On June 5, 1980, the Council on Wage and Price Stability announced that a meeting of its Pay Advisory Committee had been scheduled for August 8, 1980, at 2:00 p.m., in Room 2008 of the New Executive Office Building, 726 Jackson Place NW., Washington, D.C. 20503 (45 FR 37875). This meeting has been cancelled. The next meeting of the Pay Advisory Committee is scheduled for Tuesday, September 16, at a time and location to be announced.

Additional Information: For additional information please telephone the Office of Public Affairs at (202) 456-6756.

Dated: August 1, 1980.

Patrick J. Macfarland,

Acting Advisory Committee, Management Officer.

[FR Doc. 80-23668 Filed 8-5-80; 8:45 am]

BILLING CODE 3175-01-M

DEPARTMENT OF HEALTH AND HUMAN SERVICES

Office of the Secretary

Resettling Refugees: Availability of funding

AGENCY: HHS, Office of Refugee Resettlement (ORR), Office of the Secretary.

ACTION: Notice of the availability of funding.

SUMMARY: This document governs the award of grants for up to $50,000 each to assist non-profit refuge Mutual Assistance Association (MAAs) in providing services to persons legally admitted as refugees.

DATE: Grant application may be mailed, first class mail, postmarked not later than 11:59 p.m. Monday, September 8, 1980 or delivered not later than 5 p.m., Eastern Time, on the same date at the Central Office, Office of Refugee Resettlement, Room 1229 Switzer Building, 330 C Street S.W., Washington, D.C. 20201.

FOR FURTHER INFORMATION CONTACT: Lam Pham, 202-245-0061.

SUPPLEMENTARY INFORMATION:

I. Background

The Office of Refugee Resettlement (ORR) is authorized to make grants to non-profit organizations which provide services to refugees to facilitate their resettlement and help them attain self-sufficiency. Nationwide, many MAAs have evidenced strong interest in assisting this effort. This resource is both significant and historically appropriate. However, as refugees, members of the MAAs often lack the financial resources necessary to develop their full potential in service delivery, and their lack of familiarity with American fund-raising practices often inhibits their ability to develop necessary community based funding sources. To take advantage of their interest in, willingness to, and special ethnic consideration in assisting their fellow-countrymen, ORR will fund specific resettlement activities and services of a number of MAAs, up to a total of $50,000 each, on a competitive and demonstration basis during FY 1980.

II. Authorization

Funds for the activity described below will be provided under the Refuge Act of 1980. Catalogue of Federal Domestic Assistance No. 13.814.

III. Eligible Grantees

Eligible grantees are MAAs which are incorporated as non-profit organizations under the laws of their State, and which have, as a major objectives, the provision of services on behalf of refugee resettlement. Coalitions of such organizations are encouraged, especially where linkages and coordination with other resettlement organizations can be shown. Excluded from funding under the notice are private for-profit agencies or firms. A major objective is to encourage organizations not already receiving substantial government funding, through other mechanisms, and so priority will be given to such organizations.

IV. Allotment of Funds

Approximately $800,000 will be made available, nationwide, for purposes of this announcement for the 12-month period following the date of award. These will be one-year grants, in the maximum amount of $50,000. It is expected that successful applicants for these funds will seek subsequent funding, if warranted in future years, through other mechanisms.

V. Scope of Activities

Grants issued pursuant to this notice are intended to enhance the administrative and technical capacities of MAAs to deliver services, and to assist them in providing services in their respective communities. Such services should be in addition to those already being provided by the applying MAAs, and should be related to specific and demonstrated unmet service needs of refugees in the community where the MAA is headquartered.

In anticipation of subsequent funding through purchase of service contracts with the States in which they are operating, activities proposed may include one or any combination of the following: outreach, assessment, manpower, (career counseling, employability planning, job orientation, job development, job placement and follow-up), English As A Second Language training, vocational training, skills recertification, day care, transportation-related services, and social adjustment including information and referral services, counseling services, health related services and home management services, translation and interpreter services, and legal service.

In addition, in recognition of the need by MAA leaders and staff for training, courses for staff, related to activities proposed in the grant are encouraged, as well as activities related to capacity-building of the individual organizations. Rental of real estate for offices or service delivery is permitted, but purchase for this purpose is not. In anticipation of the MAA's needs to strengthen organizational capabilities, MAAs may include in this proposal a period of two months for activities related to start-up.

Not permitted under this notice are direct transfer of funds to refugees, purchase of resettlement resources such as furniture or food for clients, purchase of real estate for clients, funds for transportation except in connection with other services, or the funding of ethnic entertainments festivals, religious activities, or political activities. Notwithstanding the ethic makeup of the grantee, assurance must be given that service will provided to all refugees, regardless of country or origin.

VI. Application Submission and Approval Procedures

Associations which plan to apply should immediately comply with requirement of OMB Circular A-95, which requires that they notify both state and regional clearinghouses of their intent to submit an application. Details of this request and an address of the appropriate clearinghouse may be obtained by calling, toll-free, 800-424-0212. The short period of time between publication of this notice and award of grants makes it imperative that applicants comply with this requirement immediately.

Eligible applicants may request grant applications from the Office of Refugee Resettlement, HHS, 330 C Street S.W., Washington, D.C. 20201, 202-245-0403. an original application and six copies must be received by the Director, Office of Refugee Resettlement, Room 1229 Switzer Building, 330 C Street, S.W. Washington, D.C. 20201, by 5 p.m. Eastern time on Monday September 8, 1980, or sent by first class mail, postmarked before 11:59 p.m. September 8, 1980. No other grant applications will be accepted.

Panels will be convened to evaluate and rank the proposals based on criteria outlined in Section VII of this notice. Grant awards will be issued prior to September 30, 1980.

VII. Criteria for Evaluating Applications

Project grant applications will be evaluated and rated according to the following criteria:

1. Clear identification of a serious service need of the local refugee community it wishes to serve related to attaining self-sufficiency, which is not being met by current providers.
2. Familiarity of the applicant with local community refugee resettlement process.
3. The extent to which the association is clearly identified with and is supported by the refugee community and is familiar with the specific and distinct needs of its respective community.
4. The presentation of a clear and feasible method by which the applicant proposes to meet the previously unmet need or needs.
5. The extent to which activities can be evaluated quantitatively and qualitatively.
6. The extent to which the applicant can demonstrate the ability to deliver the proposed services, including program timelines.
7. Demonstration of staff competencies. When staff training and development is a part of the proposal, the extent to which this relates to a specific task or tasks to be performed should be indicated.
8. Capability of organization to manage and account for funds.
9. The reasonableness of anticipated costs.

VIII. Application content

All applicants will use Standard Form 424, "Federal Assistance" in submitting project proposals, Grant applications must also include the following:

1. Assurance that applicant has complied with procedures of OMB Circular A-95, involving notification of a State or regional clearinghouse. (See Item VI, Paragraph 1 above.)
2. Description of the applicant organization, including its organizational mandate, funding sources principal officers, addresses, telephone number, and photo copies of the organization's certificate of non-profit status (S01-C-3 papers).
3. Description of the MAA's resettlement activities at present, and its experience in the activities proposed in the grant application.
4. Staffing plan, including position description and qualifications of project director and key staff.
5. Work plan for carrying out activities.
6. Management plan. A plan for fiscal and program management to accomplish proposed objectives. The plan should describe how the proposed organization intends to administer the project, train staff, maintain records and evaluate performance.
7. Proposed budget.

IX. Records and Reports

Grantees will be required to maintain such fiscal and operational records as are necessary for federal monitoring and auditing of the grant. Quarterly project progress reports will required, due 30 days after the last day of each quarter following the effective date of the grant.

Roger P. Winter,
Director, Office of Refugee Resettlement.

[FR Doc. 80-23069 Filed 8-5-80; 10:40 am]
BILLING CODE 4110-12-M

Health Care Financing Administration

Exclusion of Heart Transplantation Procedures From Medicare Coverage

AGENCY: Health Care Financing Administration (HCFA), HHS.

ACTION: Notice of HCFA ruling to discontinue medicare coverage of heart transplantation procedures.

SUMMARY: This notice announces a HCFA ruling discontinuing Medicare coverage of heart transplantation. In November, 1979, HCFA had tentatively authorized payment for heart transplantations at Stanford University Medical Center, pending development of final criteria for coverage of heart transplantations at Stanford and other institutions. However, our continuing review of the question of coverage has disclosed the existence of a number of important issues, such as patient selection and potential social and economic implications, and a lack of sufficient current information to support development of generally applicable coverage criteria. Consequently, HCFA is now excluding heart transplantations from Medicare coverage until appropriate criteria can be issued.

EFFECTIVE DATE: June 13, 1980.

FOR FURTHER INFORMATION, CONTACT: Henry J. Hehir, 301-594-8561.

SUPPLEMENTARY INFORMATION: The text of the HCFA ruling reads as follows:

Exclusion of Heart Transplantation Procedures From Medicare Coverage

HCFAR 80-1

Purpose: This ruling establishes national policy regarding Medicare coverage of heart transplantation procedures.

Citations: Sections 1862(a)(1) and 1879 of the Social Security Act (42 U.S.C. 1395y(a)(1) and 1395pp).

Pertinent History: On November 2, 1979, HCFA authorized Medicare payments for heart transplantation procedures performed for Medicare beneficiaries at Stanford University Medical Center. This was an interim decision, based on preliminary findings by the Public Health Service (PHS) regarding the safety and efficacy of heart transplants performed at that center. The PHS recommendation followed a preliminary analysis of the clinical experience of heart transplantation at Stanford for a substantial number of patients. The recommendation was limited to heart transplants performed at Stanford because only that center, among all the cardiac transplant centers in the United States, had produced sufficient data about its transplant protocols and its success rates to permit an assessment of the medical safety and efficacy of its procedures.

It was our expectation, when reimbursement was tentatively authorized, that we soon would be able to reach a final decision not only about coverage at that center, but also on generally applicable, broadly based criteria for Medicare coverage of heart transplantations at all facilities where such procedures might be performed. In the meantime, an Administrative Law Judge (ALJ) has ruled that Medicare coverage should be extended to a Medicare beneficiary respecting a heart transplantation performed at the University of Arizona Medical Center.

As we proceeded to review Medicare coverage of heart transplants, we determined that the issues are much more complex than originally contemplated and that many of them cannot be resolved now because adequate data do not exist. There are questions, for example, concerning the patient selection process, the basis for assessing safety and efficacy at medical centers other than Stanford, the long-term social and economic consequences of the procedure, broad ethical considerations, the cost effectiveness of the procedure, and the potential, if any, for substantial expansion in the availability of heart transplantation. We have concluded that there is not sufficient information to support the development of generally applicable coverage criteria.

The Medicare statute prohibits payment for any expenses incurred for items or services "which are not reasonable and necessary for the diagnosis or treatment of illness or injury or to improve the functioning of a malformed body member" (section 1862(a)(1) of the Social Security Act). In the absence of adequate data to determine whether heart transplantations meet this statutory requirement, we have determined that it is not appropriate to continue coverage of the procedures indefinitely. Therefore, we have terminated our tentative authorization to provide payment for heart transplantations.

At the same time, we have determined that the waiver of liability provisions in section 1879 of the Act (42 U.S.C. 1395pp) apply to heart transplantation procedures at Stanford and at the University of Arizona. Reimbursement of appropriate costs will continue to be provided with respect to Medicare beneficiaries who received heart transplantations, or who have been accepted as candidates for heart transplantations, at those centers on or before the effective date of this ruling.

As soon as possible, HCFA, in close cooperation with PHS National Center for Health Care Technology, will conduct a broad study of all aspects of Medicare coverage of heart transplants, including social, ethical, economic, and scientific issues. The study will also examine the impact of a coverage decision on beneficiaries, the Medicare program, and competing health care providers. The study will include patient care costs for a limited number of Medicare beneficiaries accepted for transplantation at appropriate institutions.

When the results of the study have been analyzed, we will publish a proposed decision as to Medicare coverage and give the public an opportunity to participate fully in the development of the final policy, with all pertinent facts being made available for analysis.

Ruling: Effective June 13, 1980, heart transplantations and medical treatment directly associated with heart transplantation procedures are excluded from Medicare coverage, except as provided below.

Medicare payment may be made, as authorized under section 1879 of the Social Security Act, for heart transplantations and medical treatment directly associated with heart transplantations, performed on Medicare beneficiaries at Stanford University Medical Center and at the University of Arizona Medical Center, but only with respect to heart transplantations that (1) were performed on or before June 12, 1980, or (2) are performed on transplantation candidates accepted on or before June 12, 1980.

(Sections 1102, 1862(a)(1), and 1879 of the Social Security Act; 42 U.S.C. 1302, 1395y(a)(1), and 1395pp)

(Catalog of Federal Domestic Assistance Program No. 13.773 Medicare-Hospital Insurance and No. 13.774, Medicare-Supplementary Medical Insurance)

Dated: July 31, 1980.

Howard Newman,

Administrator, Health Care Financing Administration.

[FR Doc. 80-23689 Filed 8-5-80; 8:45 am]

BILLING CODE 4110-35-M

Public Health Service

Office of Health Research, Statistics, and Technology; National Center for Health Care Technology; Scientific Evaluation of Medical Technology

The National Center for Health Care Technology (Center) announces that it is beginning a scientific evaluation of the clinical safety and effectiveness of electrical stimulation for treatment of facial nerve palsy. Based on this evaluation, a recommendation will be formulated to assist the Health Care Financing Administration (HCFA) in establishing Medicare coverage policy.

Any person or group wishing to provide the Center with information relevant to this evaluation should do so in writing no later than 30 days from the day of this notice. To enable the Center's staff to give appropriate consideration to any literature references or analyses of clinical data, a written summary no longer than 10 pages should be attached to any such material submitted.

Written material should be submitted to: National Center for Health Care Technology, Room 17A-29, Parklawn Building, 5600 Fishers Lane, Rockville, Maryland 20857.

For further information contact: D. J. Cotter, Health Science Analyst, National Center for Health Care Technology, Room 17A-29, Parklawn Building, Rockville, Maryland 20857, (301) 443-4990.

Dated: August 1, 1980.

Wayne C. Richey, Jr.,

Acting Executive Secretary, Office of Health Research, Statistics, and Technology.

[FR Doc. 80-23676 Filed 8-5-80; 8:45 am]

BILLING CODE 4110-85-M

National Council on Health Care Technology; Meeting

Pursuant to the Federal Advisory Act (Pub. L. 92-463) notice is hereby given that the sixth meeting of the National Council on Health Care Technology established pursuant to the Health Research, Health Statistics, and Health Care Technology Act of 1978 (Pub. L. 95-623) which advises the Secretary and the Director of the National Center for Health Care Technology on the activities of the Center will convene on Thursday, August 14, 1980 at 9:30 a.m. and Friday, August 15, 1980 at 9:00 a.m. in Room 800 of the Hubert H. Humphrey Building, 200 Independence Avenue, S.W., Washington, D.C. 20201.

This meeting will be open to the public from 9:30 a.m. to 4:00 p.m. on August 14 and from 9:00 a.m. to 4:30 p.m. on August 15 to discuss the business of the Council and the Center. Principal consideration and discussion will be devoted to the reports of the Subcommittees on Criteria and Research Agenda, Coverage, and Grants and Contracts.

Additionally, there will be updates on Center activities including the heart transplant evaluation project, coverage issues, End Stage Renal Disease, and a report on the OTA Cost Effectiveness Study. The Council will also discuss the process for development of criteria and the process for development of critieria and standards for the use of health care technologies and finalize the Goals of the Council.

This meeting on August 14, 1980, will be closed to the public from 4:00 p.m. to adjournment in accordance with the provisions set forth in Sections 552b(c)(4) and 552b(c)(6), Title 5, U.S. Code, and Section 10(d) of Pub. L. 92-463, for the review, discussion, and evaluation of individual grant applications, as indicated. These proposals and applications and the discussions could reveal confidential trade secrets or material, and personal information concerning individuals associated with the proposals and applications, the disclosure of which would constitute a clearly unwarranted invasion of personal privacy.

Further information regarding the Council may be obtained by containing Sharon Paino, Acting Executive Secretary, National Council on Health Care Technology, Room 17A-43, 5600 Fishers Lane, Rockville, Maryland 20857.

Dated: July 17, 1980.

Wayne C. Richey, Jr.,

Associate Director for Program Support, Office of Health Research, Statistics, and Technology.

[FR Doc. 80-23599 Filed 8-5-80; 8:45 am]

BILLING CODE 4110-85-M

Sunshine Act Meetings

Federal Register
Vol. 45, No. 153
Wednesday, August 6, 1980

This section of the FEDERAL REGISTER contains notices of meetings published under the "Government in the Sunshine Act" (Pub. L. 94-409) 5 U.S.C. 552b(e)(3).

CONTENTS

	Items
Commodity Futures Trading Commission	1
Federal Reserve System	2, 3
International Broadcasting Board	4
Tennessee Valley Authority	5

1

COMMODITY FUTURES TRADING COMMISSION.

TIME AND DATE: 11 a.m., Friday, August 15, 1980.

PLACE: 2033 N Street NW., Washington, D.C., eighth floor conference room.

STATUS: Closed.

MATTERS TO BE CONSIDERED: Surveillance briefing.

CONTACT PERSON FOR MORE INFORMATION: Jane Stuckey, 254-6314.

[S-1486-80 Filed 8-4-80; 11:24 am]

BILLING CODE 6351-01-M

2

FEDERAL RESERVE SYSTEM.

(Committee on Employee Benefits of the Board)

"FEDERAL REGISTER" CITATION OF PREVIOUS ANNOUNCEMENT: 45 PR, 51041, July 31, 1980.

PREVIOUSLY ANNOUNCED TIME AND DATE OF THE MEETING: 2 p.m., Tuesday, August 5, 1980.

CHANGES IN THE MEETING: Change in the time of the above closed meeting to 10 a.m., August 5, 1980.

CONTACT PERSON FOR MORE INFORMATION: Mr. Joseph R. Coyne, Assistant to the Board (202) 452-3204.

Dated: August 1, 1980.

Theodore E. Allison,

Secretary of the Board.

[S-1483-80 Filed 8-1-80; 4:18 pm]

BILLING CODE 6210-01-M

3

FEDERAL RESERVE SYSTEM.

TIME AND DATE: 10 a.m., Monday, August 11, 1980.

PLACE: 20th Street and Consitution Avenue NW., Washington, D.C. 20551.

STATUS: Closed.

MATTERS TO BE CONSIDERED:

1. Personnel actions (appointments, promotions, assignments, reassignments, and salary actions) involving individual Federal Reserve System employees.
2. Any agenda items carried forward from a previously announced meeting.

CONTACT PERSON FOR MORE INFORMATION: Mr. Joseph R. Coyne, Assistant to the Board (202) 452-3204.

Dated: August 1, 1980.

Theodore E. Allison,

Secretary of the Board.

[S-1484-80 Filed 8-1-80; 4:19 pm]

BILLING CODE 6210-01-M

4

BOARD FOR INTERNATIONAL BROADCASTING.

TIME AND DATE:
2:30 p.m., August 14, 1980.
9:30 a.m., August 15, 1980.

PLACE: Board for International Broadcasting Conference Room, Suite 430, 1030 15th Street, N.W., Washington, D.C. 20005.

STATUS: Closed, pursuant to 5 U.S.C. 552b(c)(1) 22 CFR 1302.4 (c) and (h) of the Board's rules (42 FR 9388, Feb. 16, 1977).

MATTERS TO BE CONSIDERED: Matters concerning the broad foreign policy objectives of the United States Government.

CONTACT PERSON FOR ADDITIONAL INFORMATION: Arthur D. Levin, Budget and Administrative Officer, Board for International Broadcasting, Suite 430, 1030 15th Street, N.W., Washington, D.C. 20005, 202-254-8040.

[S-1485-80 Filed 8-4-80; 11:04 am]

BILLING CODE 6155-01-M

5

[Meeting No. 1250]

TENNESSEE VALLEY AUTHORITY.

TIME AND DATE: 2 p.m., Monday, August 11, 1980.

PLACE: Conference room B-32, West Tower, 400 Commerce Avenue, Knoxville, Tennessee.

STATUS: Open.

DISCUSSION ITEM: 1. Preliminary rate review.

ITEMS FOR ACTION: (A) Project authorization:

1. No. 3522—Design and construction of auxiliary shop/storage building for Power Service Shops, Muscle Shoals, Alabama.

(B) Purchase awards:

1. Req. No. 603009—Indefinite quantity term contract for unleaded gasoline for any TVA project or warehouse.
2. Req. No. 627480—Indefinite quantity term contract for fabricated nuclear quality reinforcing steel for Browns Ferry, Sequoyah, and Watts Bar Nuclear Plants.
3. Req. No. 623216—Seismic pipe supports for Yellow Creek Nuclear Plant.
4. Req. No. 627543—Indefinite quantity term contract for reinforcing steel for Phipps Bend Nuclear Plant.
5. Req. No. 529930—Requirement contract for wet-process phosphoric acid for Division of Chemical Operations, Sheffield, Alabama.
[1]6. Req. No. 626975—Insulation for precipitators, ductwork, and related equipment, including installation, for Cumberland Fossil Plant.
7. Amendment to contract 71C62-54114-2 with Babcock and Wilcox Company, Lynchburg, Virginia, for Nuclear Steam Supply Systems for Bellefonte Nuclear Plant.

(C) Power items:

1. Agreements covering certain distributors' participation in TVA's systemwide load research program.
2. Transmission service agreement supplementing existing agreements with Alabama Power Company.
3. New power contract with Champion International Corporation, Courtland, Alabama, and deed and bill of sale conveying certain facilities in TVA's Nance 161-kV Switching Station to the Corporation.
4. New power contract with Fort Loudoun Electric Cooperative.
5. New power contract with Holston Electric Cooperative.
6. New power contract with Appalachian Electric Cooperative.

(D) Personnel actions:

[1]1. Change of status for Larry H. Edwards from Assistant to the Manager, Office of Engineering Design and Construction, to Deputy Manager of Planning and Budget, Office of Planning and Budget, Knoxville, Tennessee.
[1]2. Change of status for Douglas W. Hulme from Assistant Comptroller to Chief, Accounting Policy and Procedures Staff, Office of Planning and budget, Knoxville, Tennessee.
[1]3. Change of status for Donald W. Earl from Project Manager, Office of the General Manager, to Chief, Financial Analysis and Cost Management Staff, Office of Planning and Budget, Knoxville, Tennessee.
[1]4. Change of status for Daryl R. Armentrout, Assistant to the Manager, Office

of Engineering Design and Construction, Knoxville, Tennessee.

[1] 5. Change of status for James B. Bussell from Chief, Management Planning Staff, Engineering Design and Construction to Assistant to the Manager, Engineering Design and Construction, Office of Engineering Design and Construction, Knoxville, Tennessee.

[1] 6. Change of status for Gene M. Wilhoite from Chief, Civil Engineering & Design Branch, to Assistant Director, Division of Transmission Planning & Engineering, Office of Power, Chattanooga, Tennessee.

7. Renewal of consulting contract with Jack E. Gilleland, Signal Mountain, Tennessee, for advice and assistance in connection with TVA's power and energy-related programs, requested by the Office of Power.

8. Renewal of consulting contract with Roy W. Carlson, Berkeley, California, for advice and assistance in the field of concrete dam construction and inspection, requested by the Office of Engineering Design and Construction.

9. Renewal of personal services contract with Hartford Steam Boiler Inspection and Insurance Company, Hartford, Connecticut, for performance of authorized inspection services at TVA nuclear power plant sites, requested by the Office of Engineering Design and Construction.

(E) Real property transactions:

[1] 1. Grant of permanent easement to the Hiwasees Utility Commission, Athens, Tennessee, for a water pipeline, affecting approximately 0.15 acre of Chicamauga Reservoir land—Tract XTCR-169WL.

2. Grant of permanent easement to the city of Lexington, Tennessee, for a water treatment plant expansion, affecting 1.9 acres of Beech Dam Reservation land—Tract XTBRBR-1WP.

3. Sale of permanent easement to AAA Communications Company, Inc., for construction, operation, and maintenance of radio and television communication systems, affecting approximately 0.05 acre of TVA's Donelson Microwave Repeater Station site—Tract XCNRS-1E.

4. Sale of permanent easement to Lonas Strevel to resolve an encroachment created by the construction of an apartment building, affecting 0.09 acre of Cherokee Reservoir land—Tract XCK-570B.

5. Filing of condemnation suits.

(F) Unclassified:

1. Proposed sale of surplus property—Miscellaneous warehouse items (electrical cable, conduit, pipe fittings, pipe, small tools, etc.) in various quantities at several TVA projects.

2. New TVA policy code relating to the management of hazardous material and waste.

3. Revised TVA policy code relating to mosquito control and repeal of TVA policy code relating to malaria.

4. Final decision of the Secretary of Labor in the dispute resulting from the 45th Annual Wage Conference between International Brotherhood of Painters and Allied Trades and TVA relative to a prevailing wage for painters.

5. Changes in designation of officers to certify vouchers.

Dated: August 4, 1980.

CONTACT PERSON FOR MORE INFORMATION: Craven Crowell, Director of Information, or a member of his staff can respond to requests for information about this meeting. Call (615) 632-3257, Knoxville, Tennessee. Information is also available at TVA's Washington Office (202) 245-0101.

[S-1487-80 Filed 8-4-80; 4:43 pm]

BILLING CODE 8120-01-M

[1] Approved by individual Board members. This would give formal ratification to the Board's action.

Federal Register

Wednesday
August 6, 1980

Part II

Department of the Interior

Bureau of Land Management

Alaska Native Allotment Act; Requirements for Occupancy and Use of a Native Allotment

DEPARTMENT OF THE INTERIOR

Bureau of Land Management

43 CFR Part 2560

Alaska Native Allotment Act; Requirements for Occupancy and Use of a Native Allotment

AGENCY: Bureau of Land Management, Interior.

ACTION: Proposed rulemaking.

SUMMARY: This proposed rulemaking will provide a procedure for carrying out the policy of the Department of the Interior regarding the requirement for 5 years use and occupancy under the Alaska Native Allotment Act, as amended. This procedure clarifies requirements for eligibility for a Native allotment and allows the orderly conveyancing of those allotments to Alaska Natives.

DATE: Comments by October 6, 1980.

ADDRESS: Comments should be sent to: Director (650), Bureau of Land Management, 1800 C Street, NW., Washington, D.C. 20240. Comments will be available for public review in Room 5555 of the above address during regular business hours (7:45 a.m. to 4:15 p.m.) Monday through Friday.

FOR FURTHER INFORMATION CONTACT: Sue Wolf, 202 343-6511;
or
Robert C. Bruce, 202 343-8735.

SUPPLEMENTARY INFORMATION: This proposed rulemaking will incorporate Secretarial Order 3040, dated May 25, 1979, in the regulations of the Department of the Interior.

By memorandum from the Assistant Secretary, Land and Water Resources, to the Director, Bureau of Land Management, dated October 18, 1973, the Department of the Interior adopted a 5-year prior time rule for Native allotments. The memorandum sets out the rule as follows: "Vacant, unappropriated and unreserved land in Alaska is available for allotment under the Native Allotment Act. With respect to reserved or withdrawn land, if a Native has *completed* the 5-year period of statutory substantial use and occupancy prior to the effective date of the withdrawal or reservation, the withdrawal may be revoked and the allotment granted." This policy resulted in the denial of many applications for Native allotments. These denials have resulted in the filing of several lawsuits challenging this restrictive interpretation of the Act of May 17, 1906 (43 U.S.C. 270-1), which was repealed by the Alaska Native Claims Settlement Act (43 U.S.C. 1601 et seq.).

In an effort to resolve the controversy, the Secretary of the Interior carefully analyzed the problem and on May 25, 1979, issued Secretarial Order 3040 which rescinded the policy position taken in the October 1973 memorandum and replaced it with a new policy. The new policy still requires that the full 5-years use and occupancy shall have been completed prior to the granting of the Native allotment, but allows the applicant either to have filed for a Native allotment or commenced use and occupancy prior to the withdrawal of the lands. This new policy will be incorporated in the Native Allotment regulations by this rulemaking.

The principal author of this rulemaking to Ms. Sue Wolf of the Alaska Program Staff, assisted by the staff of the Office of Legislation and Regulatory Management, Bureau of Land Management.

It is hereby determined that the publication of this document is not a major Federal action significantly affecting the quality of the human environment and that no detailed statement pursuant to section 102(2)(C) of the National Environmental Policy Act of 1969 (43 U.S.C. 4332(2)(C) is required.

Note.—The Department of the Interior has determined that this document is not a significant regulatory action and does not require a regulatory analysis under Executive Order 12044 and 43 CFR Part 14.

Under the authority of the Act of May 17, 1906 (34 Stat. 197), as amended August 2, 1958 (43 U.S.C. 270-1—270-3), and the Alaska Native Claims Settlement Act (43 U.S.C. 1601 et seq.), it is proposed to amend § 2561.0-8, Subpart 2561, Part 2560, Subchapter B, Chapter II of Title 43 of the Code of Federal Regulations as set forth below:

§ 2561.0-8 Lands subject to allotment.

* * * * *

(e) Lands covered by applications for allotment shall have been vacant, unappropriated and unreserved at the time the applicant filed an application for a Native allotment or at the time occupancy commenced.

James W. Curlin,
Acting Assistant Secretary of the Interior.
July 30, 1980.

[FR Doc. 80-23409 Filed 8-5-80; 8:45 am]
BILLING CODE 4310-84-M

federal register

Wednesday
August 6, 1980

Part III

Department of the Interior

Office of Surface Mining Reclamation and Enforcement

Surface Coal Mining and Reclamation Operations Permanent Regulatory Program; Performance Bonding

DEPARTMENT OF THE INTERIOR

Office of Surface Mining Reclamation and Enforcement

30 CFR Parts 800, 801, 805, 806, 807, and 808

Surface Coal Mining and Reclamation Operations Permanent Regulatory Program; Performance Bonding (Subchapter J)

AGENCY: Office of Surface Mining Reclamation and Enforcement, U.S. Department of the Interior.

ACTION: Final rules.

SUMMARY: The Office of Surface Mining Reclamation and Enforcement (OSM) amends portions of Subchapter J of its permanent regulatory program relating to bond and insurance requirements for surface coal mining and reclamation operations. The changes revise provisions concerning the period of liability, the form of the performance bond, performance-bond requirements for long-term facilities and disturbances, and release and forfeiture of the bond. Several of the changes are in direct response to a petition for rulemaking filed with OSM, while others were generated from comments received during the petition review process.

EFFECTIVE DATE: September 5, 1980.

ADDRESSES: Copies of these amendments may be obtained from the following OSM offices:

Headquarters, U.S. Department of the Interior, South Building, Room 153, 1951 Constitution Avenue NW., Washington, DC 20240; 202-343-4728.

Region I, Thomas and Hill Building, 1st Floor, 950 Kanawha Boulevard, East Charleston, WV 25301; 303-342-8125.

Region II, Suite 500, 530 Gay Street SW., Knoxville, TN 37902; 615-637-8060.

Region III, Room 502, Federal Building & U.S. Courthouse, 46 East Ohio Street, Indianapolis, IN 46204; 317-269-2600.

Region IV, Scarritt Building, 5th Floor, 818 Grand Avenue, Kansas City, MO 64106; 816-374-2618.

Region V, Brooks Towers, 1020 15th Street, Denver, CO 80202; 303-837-5511.

Copies of public comments received on the petition for rulemaking and proposed rules discussed below may be obtained at: Office of Surface Mining, Room 153, Interior South Building, 1951 Constitution Avenue, Washington, DC 20240, (202-343-4728).

FOR FURTHER INFORMATION CONTACT: David R. Maneval, Assistant Director, Technical Services and Research, Office of Surface Mining, U.S. Department of the Interior; 202-343-4264, or Russ Price, P.E. Division of Technical Services, Office of Surface Mining, U.S. Department of the Interior; 202-343-4022.

SUPPLEMENTARY INFORMATION: On March 13, 1979, OSM promulgated permanent program regulations as required by Section 501(b) of the Surface Mining Control and Reclamation Act of 1977 (Pub. L. 95-87) ("the Act"). Subchapter J, Parts 800-809, of the permanent program regulations pertains to bond and insurance requirements for surface coal mining and reclamation operations. Notices pertaining to Subchapter J have been published in the Federal Register as follows: 44 FR 15385-15393 (Mar. 13, 1979), with corrections published at 44 FR 15485 (Mar. 14, 1979), 44 FR 28005-28008 (May 14, 1979), 44 FR 49673-49687 (Aug. 24, 1979), 44 FR 52098 (Sept. 6, 1979), 44 FR 53507-53509 (Sept. 14, 1979), and 44 FR 66195 (Nov. 19, 1979).

Additionally, portions of the bonding rules, as well as other permanent program rules, were suspended by announcements appearing at 44 FR 67942 (Nov. 27, 1979) and 44 FR 77455 (Dec. 31, 1979). These provisions were suspended as a result of their reevaluation in the context of pending litigation (*In Re: Permanent Surface Mining Regulations Litigation*, filed May 9, 1979, D.D.C.—Civil Action 79-1144).

As a result of a petition for rulemaking filed by the Mining and Reclamation Council of America (MARC), Travelers Indemnity Company, and Green Mountain Company, ("the petitioners"), and comments received on the petition, OSM concluded that several Sections of Subchapter J needed revision. Refer to 44 FR 28005-28008 (May 14, 1979) and 44 FR 52098 (Sept. 6, 1979), respectively.

Amendments were proposed by OSM on January 24, 1980. The rules proposed January 24, 1980 (45 FR 6028-6042) and the accompanying preamble contain much of the basis and rationale for the final rules adopted herein and are hereby incorporated in this notice by reference.

In addition to the 60-day comment period ending March 24, 1980, the comment period was reopened June 27, 1980, (45 FR 43437) for 5 days to include a comment from the U.S. Department of Agriculture (USDA), Forest Service, and a discussion of an April 16, 1980, meeting held with USDA after the comment period ended. The subject of this letter was a proposed provision for early release of operator liability for reclamation, if the reclamation is conducted by a Federal, State, or independent agency as part of a research project. This request is part of an official petition process and subject to a separate rulemaking. The petition was published for comment June 18, 1980, (45 FR 41166) and a public meeting was held on July 10, 1980.

The final rules adopted today resolve issues identified in the petition submitted by MARC, issues suspended by OSM as directed by the U.S. District Court for the District of Columbia, and issues raised in comments received during the comment periods and public meetings of the petition for rulemaking and proposed amendments. Those amendments proposed January 24, 1980, (45 FR 6028) for which no substantive comments were received are being adopted today as final amendments to Subchapter J of the permanent program regulations except for Section 806.11(a), which was changed to include another type of bonding method. Other comments were received which were not pertinent to the issues opened under this rulemaking. These comments, although considered, are not addressed in this document.

The bonding rules, as amended in this notice, will serve as the Federal standard for State Permanent Regulatory Program submissions required by 30 CFR Chapter VII, Subchapter C, Part 732. However, because 22 State programs are currently being reviewed by the Secretary and others have approval, States will be given an opportunity at a later date to change their programs to reflect the amendments adopted today. If a State's program has been approved, OSM will notify the State of any changes it considers necessary and the State will have 6 months to make changes that can be made by a change in State regulations. The State will have until the end of its next legislative session to make the change if a change in State law is required.

For State programs which are pending an initial decision by the Secretary or which have been resubmitted on the basis of such an initial decision, the final decision on the programs will be based on the regulations as they existed when the State programs were submitted, subject only to changes that have been mandated by the Court. States may, at any time, propose to amend their programs to comply with these new amendments and, subject to requirements for public comment, the Secretary may approve amendments in accordance with 30 CFR 732.17. In addition, program submissions which contain provisions incorporating these new rules or provisions based on the proposed rules not adopted today may be approvable under 30 CFR 806.11(b) (formerly 30 CFR 806.11(c)), alternative

bonding schemes, or under 30 CFR 731.13, the "state window" provision, if the required showings are made. The States will be advised of further changes that may be required at the time of the Secretary's decision on their programs and will be allowed 6 months or until the next legislative session to accomplish the changes.

Discussion of Comments on Proposed Rules Issued January 24, 1980 (45 FR 6028–6042)

Part 800—General Requirements for Bonding of Surface Coal Mining and Reclamation Operations Under Regulatory Programs

§ 800.5 Definitions.

OSM proposed changes in the definitions of the terms "self-bond" and "collateral bond" to coincide with changes in the self-bonding and collateral-bonding regulations that were made in response to the issues raised by the petitioners and other commenters. Many comments were received on the proposed changes. One commenter noted that in the proposed amendment of the definition of collateral bonds, negotiable bonds of the United States or municipalities were included, but negotiable State bonds were not. He pointed out that State bonds were considered a valuable asset in bonding collateral and should be included. As a matter of fact, the definition of collateral bonds in the March 13, 1979, rulemaking included negotiable State bonds as well as those of the United States and municipalities. State bonds were unjustifiably omitted from the amended definition, and OSM is adopting a definition of collateral bond which includes negotiable State bonds.

Another commenter pointed out that the definition of collateral bonds includes irrevocable letters of credit issued by a bank permitted to do business in the United States. However, he pointed out that some State laws may allow only those banks incorporated or authorized to do business in the State to issue letters of credit. This restriction could preclude a meaningful bond option in the form of letters of credit, and local banks with limited credit capacity might be unable to meet the needs of the coal mining companies. In order to remedy this situation, the commenter suggested that the regulations include a provision permitting letters of credit to be issued to OSM in behalf of the regulatory authority. OSM can find no legal basis whereby it could undertake to act as agent for a State regulatory authority in the manner suggested. Moreover, OSM believes that the States, not OSM, should determine whether or not to allow letters of credit from out-of-State banks. If a State's regulations prohibit banks that are not incorporated or authorized to do business in the State from issuing letters of credit, then the State must decide whether or not to change its laws. Therefore, the provisions for allowing any bank in the United States to issue letters of credit is retained for use with State discretion, and the recommended change has not been accepted.

Another commenter requested that the requirements for letters of credit and self-bonding be clarified so that the States have the option of authorizing these methods of bonding but not be obligated to use them. OSM believes that it is clear that letters of credit and self-bonding are options that the States may elect to use but are not required to. In Section 806.11, letters of credit and self-bonding are listed as two of five approved methods of bonding, but any one of the five types alone is sufficient, as is supported by the word "or." As proposed Section 806.11(a) states, "The regulatory authority *may* allow for (1) a surety bond, (2) a collateral bond, (3) establishment of an escrow account, (4) self-bonding, *or* (5) a combination of these bonding methods" (emphasis added). The regulatory authority is not required to utilize *either* letters of credit *or* self-bonding, but rather it may select any of the types of bonding individually, or in combination. Therefore, no additional clarification has been provided in the final rules.

A State commenter proposed that the self-bond definition be rewritten to clarify the term as follows: "*Self-bond* means the unsecured bond of the applicant accompanied by one or more agreements executed by other persons indemnifying the regulatory authority against loss by reason of the applicant's failure to fulfill its bond." OSM intends to further study the options for securing performance under self-bonding and is not now eliminating the requirement that self-bonds be secured. Therefore, this request has been deferred pending the outcome of the proposed study. The definition of the term "self-bond" is not amended at this time.

§ 800.11 Requirements to file a bond.

Cumulative bonding was proposed to allow flexible use of bonds and reduce the amount of bond coverage necessary if bond release and reinstatement on subsequent increments can be sequenced to an operator's advantage. OSM received many comments on the proposal to allow bond amounts to be calculated on a cumulative basis. One commenter stated that cumulative bonding was an important addition to other bonding alternatives. Another stated that cumulative and incremental bonding are needed, but that the bonding rules need further revision for the regulatory program to be effective, efficient, and of least cost to the public. Another noted that although cumulative bonding should prove beneficial in theory, record keeping would be "horrendous" and timing on bond release and filing of new bonds would have to be exact. One commenter was concerned about the adequacy of a bond amount calculated cumulatively to cover the full cost of reclamation. Another commenter addressed the necessity of correctly projecting the acreage to be disturbed in order to ensure a proper bond amount. A State commenter maintained that, except for the entire permit area, bond amounts should not be tied to acreage, as is done under incremental or cumulative bonding. The State believes that tying bond amounts to acreage under incremental and cumulative bonding is confusing because these regulations seem to imply that bonding obligations apply only to a particular area and do not extend to the entire permit area. The State also asked whether cumulative bonds would circumvent the bond-release criteria of Part 807 and would be released automatically to float to the next area to be disturbed.

OSM considered three options: (1) Retain the original provision of § 800.11 as published March 13, 1979, (2) adopt revised regulations for § 800.11 as proposed January 24, 1980, or (3) adopt revised regulations for § 800.11 as proposed by commenters. OSM believes that the most important factor in applying a cumulative bond is the achievement of the proposed schedule by which affected areas in various phases of reclamation and areas not yet disturbed are included or excluded in the amount of bond coverage. Of course, variation of the bond amount cannot be allowed in a manner that would ever result in the amount forfeitable falling below the actual estimated full cost of completing reclamation on all disturbed areas.

OSM agrees that keeping records, timing bond release and filing of new bonds, determining accurate bond amounts to cover the cost of reclamation, and projecting the areas to be disturbed could become problems for the regulatory authority. However, OSM believes that most of these problems are inherent under any bonding system, and are not unique to cumulative bonding.

Timing on bond release and the filing of new bonds is critical and is based on

the successful completion of reclamation according to the proposed schedule. Bond release under cumulative bonding is subject to timing and other criteria of Part 807 such as notification, hearings, and inspection. OSM believes that under cumulative bonding, it is to the operator's monetary advantage to complete reclamation on schedule and to fulfill the other requirements of § 800.11(b)(2). Obtaining bond on additional acreage will be difficult and costly for the operator if reclamation on previous acreage has not proceeded on schedule. In addition, the operator could face bond forfeiture under §§ 808.13(a)(1) and (2) and 808.13(b)(3). Consequently, OSM believes that an operator choosing cumulative bonding would have sufficient vested interest to proceed with reclamation as scheduled, thus minimizing problems for the regulatory authority.

Determination of accurate bond amounts to cover the cost of reclamation and protection of areas to be disturbed are also critical and are problems inherent in other bonding systems. Operators who elect a cumulative bonding schedule must adhere to requirements of Parts 805 and 806 to ensure that the bond amount is adequate to meet the costs of reclamation. In addition, the operator must comply with § 800.11(b)(2), which provides that the operator "must identify the initial and successive incremental areas for bonding on the permit application map submitted for approval as provided in 30 CFR 780.14 and shall specify the proportion of the total bond amount required for the term of the permit which will be filed prior to commencing operations on each incremental area." Thus, the regulatory authority can use criteria in Part 805 to determine adequate bond amounts and in § 800.11(b)(2) to project areas to be disturbed.

Concern about liability under cumulative and incremental bonding is justifiable. However, § 806.12(c) and proposed § 808.12(c) clearly provide that liability under any bond (whether full, incremental, or cumulative) can extend to cover the entire permit area. Cumulative bonds are not released automatically, nor do they "float" to the next increment. The residual bond amount after release may be used on a successive increment at the discretion of the regulatory authority. Cumulative bonds, as with other types of bonds, are subject to the bond-release criteria of Part 807 and bond-forfeiture requirements of Part 808. Therefore, OSM believes that no further clarification is necessary under § 800.11 concerning bond-liability or bond-release requirements.

On the basis of the foregoing discussion, and the frequency of inspections required by the Act, OSM has selected option 2. Cumulative bonding will allow an operator to provide a single bond for a permit area including all or part of the increments at differing levels of mining activity. Unlike bonds on separate increments, the forfeitable amount of the cumulative bond may vary as areas are added or deleted. As in incremental bonding, the total bond posted must be sufficient to assure completion of the reclamation plan by the regulatory authority in the event of forfeiture.

OSM proposed amendments to § 800.13(a) and (d) regarding forms for filing performance bonds and limiting the acceptance of self-bonds in lieu of surety or collateral bonds to instances where the permittee meets the requirements of § 806.14 and any additional requirements for a State or Federal program. No comments were received on these amendments. Consequently, these amendments are adopted without change.

Part 801—Bonding Requirements for Underground Coal Mines, Coal-Processing Plants, Associated Structures, and Other Coal-Related Long-Term Facilities and Structures

A new Part 801 was proposed at the suggestion of the petitioners to distinguish between a surface mine (short duration) bonds and the long-term bonding aspects of underground mines and coal-related processing facilities. Commenters were concerned with the need for this distinction and in general agreed with the provisions.

§ 801.11 Applicability.

This Section establishes that the Part applies to portions of coal mines and coal mining operations which generally have a life in excess of 5 years and continually disturb the same surface areas, operations such as underground mines, coal-processing plants, refuse areas, and coal-loading facilities.

§ 801.11(a)(1).—A commenter referring to proposed § 801.11(a)(1) maintained that if "continuously disturb the surface" is a condition of this Part, then the subsidence-control measures to be constructed under § 801.16(a) should not be included within its scope since, when completed, construction does not continue to disturb the surface. The intent of this Part is to include bond coverage only for construction of *surface* measures to prevent subsidence (as opposed to purely underground construction, such as backstowing), and therefore § 801.11(a)(1) has been revised to include the cost of construction of the facilities enumerated under § 801.16 as calculated as part of the bond amount under § 805.11.

§ 801.11(b).—This Paragraph as proposed intended to allow those operations listed in § 801.11(a), when conducted on a larger area at a surface mine, to be bonded under the method for long-term operations as a separate increment of the surface mining permit. This does not mean that a separate permit must be issued for both the surface and long-term operations.

§ 801.13 Period of liability.

This Section provides for continuous bond coverage by requiring that bond extension or replacement be posted 120 days prior to expiration of any bond. A commenter referring to the proposed language felt that provisions should specify an "extend or pay" clause, especially for letters of credit. This would ensure continuous coverage and all parties would be aware of the conditions of bond coverage. Section 801.13 has been clarified to specify the terms of liability on long-term operations and provide for continuous coverage throughout the liability period by requiring replacement or extension of bond coverage subject to forfeiture for failure to comply. This aspect is particularly important in operations nearing the end of their useful productive life. An operator may find increased difficulty in obtaining a replacement bond in this period. This provision requires that the operator and surety, if applicable, consider the consequences of forfeiture if bond coverage through extension or replacement is not provided. Since bonds must provide continuous coverage until replaced or released, the option of developing an escrow account or guarantees provided by the "Combined surety/escrow method," § 806.17, may be more acceptable, especially toward the end of the operation.

A commenter pointed out that this Section apparently requires a *new* bond to be posted to renew a permit and recommended that provisions be added for extending the current bond for the renewal term. The option of continued coverage is acceptable to OSM and would afford the same degree of coverage while giving maximum flexibility to extended bond coverage. This provision has been incorporated in Section 801.13(b) by deleting the word "new" in the final rule and allowing extension of current coverage.

§§ *801.14 and 801.15*

No comments were received on proposed Sections 801.14 and 801.15. Therefore, these Sections have been incorporated into these final rules.

§ *801.16 Subsidence and mine drainage.*

This Section requires that surface measures constructed to prevent subsidence be bonded. Since the bonded surface area of an underground mine may be isolated from surface-owners' property, the inspection of these surface measures may require access to private property.

§ *801.16(a).*—One commenter posed the problem of what will happen if a property owner refuses to permit the regulatory authority access to his or her property for the purpose of inspecting surface facilities proposed to be released from bond coverage. No suggested remedy was offered. The Act requires surface disturbances to be bonded, and since the surface measures provide protection to the surface owner's property, it would appear to be in the best interest of both the operator and the owner to ensure proper construction to prevent subsidence and allow bond release. If the surface owner denies access for inspection, the regulatory authority should advise the surface owner of the pending bond release and request his or her comments. If no commnets are received, the bond may be released. Care should be taken that all correspondence is by certified mail with return receipt. A specific provision has been added to § 801.16(a) to provide guidance for bond release on surface measures if an owner refuses to allow inspection by the regulatory authority. It should be emphasized that although surface measures are taken, unplanned subsidence continues to be an operator responsibility under § 817.124(b).

Several industry commenters requested the addition of an exemption from bonding of surface measures when using conventional room-and-pillar mining methods similiar to that provided in § 817.121. They felt that since this mining method is usually conducted so as to preclude subsidence, no bond should be required. OSM feels that this Section clearly requires no bond if a method to control subsidence which does not disturb the surface is used. OSM agrees with this rationale, but feels that a blanket exemption is unnecessary. Under the room-and-pillar method, no surface measures are taken whether planned subsidence occurs or not, since the method is in itself a measure to prevent subsidence. However, if room-and-pillar methods cause unplanned subsidence, and damage to surface land use occurs, the provisions of § 817.124 apply. Therefore, OSM feels that an exemption for room-and-pillar mining is not required under the applicability of this Part. This provision is not considered to conflict with § 817.121, which authorizes the room-and-pillar mining method.

One State commenter pointed out that the State plans to require monitoring of subsidence regardless of whether subsidence is expected or not, and that their bond amount would include monitoring-survey costs. OSM feels that bonding of ongoing surveys to monitor subsidence may be included as part of more stringent control measures required under State reclamation-plan requirements, but that this requirement would exceed the bonding requirements of this Part if no subsidence is planned. Thus, a provision of this nature in the State program would be considered more stringent. Sections 817.121–817.124 provide insurance coverage or financial coverage for reimbursement for any damage caused by unplanned subsidence. OSM believes that only quantifiable actions fall under bond coverage and that unknown, unestimatable actions or ongoing monitoring are beyond the scope of performace bonding. Therefore, no provision for including monitoring-survey costs in the bond amount has been added to this Part.

§*801.16(b).*—This Section as proposed would have required bonding of surface facilities constructed to provide treatment of mine drainage. Such facilities may remain indefinitely to treat drainage or may be removed with the termination of mining. If revegetation has progressed satisfactorily and a sedimentation pond is no longer necessary, the impoundment may be removed. A commenter requested clarification of the extention of the liability period if sedimentation ponds and impoundments are to be removed as part of the postmining land use. Section 805.13 of the proposed regulations requires an extension of the liability period of 5 or 10 years if the impoundment is removed during the original-liability period. The regulations provide two alternatives to the regulatory authority. First, it may separate the area disturbed and reclaimed for removal of the impoundment as a segment of the bonded area as provided under Section 805.13(c); second, it may call for or authorize removal of the impoundment and reclamation of the area early in the original liability period as long as the conditions of Section 807.12 are met with respect to revegetation, sediment control, and runoff. Conditions of § 807.12(e)(2) (i) and (ii) must be met with respect to performance standards for sediment control and runoff, and an adequate standard of vegetation established before a sedimentation pond may be removed. The revegetation work on the impoundment area is subject to the full applicable liability period, thereby requiring extension. However, early removal in the original liability period will minimize the extended period.

OSM belives that no specific provision is required to address this problem, that adequate flexibility exists in the provisions of Section 805.13 for extension of liability on either permit or increment, separation of bonded areas, or approval or reclamation practices to allow a regulatory authority to handle this condition on a case-by-case basis. However, additional language has been added to clarify the intent that areas from which impoundments have been removed are subject to the liability period in determining successful revegetation.

§ *801.17 Bond forfeiture*

This Section sets forth the conditions for bond forfeiture. No specific comments were received; therefore, this Section has been adopted as proposed.

Part 805—Amount and Duration of Performance Bond

§ *805.13 Period of liability*

§ *805.13(a)*—This Section requires an operator to be responsible for revegetation of the permitted area. No amendment was proposed to § 805.13(a), but a comment was received. The USDA Forest Service pointed out that the provisions of Part 805 did not allow a research activity to accept responsibility for reclamation and relieve the operator from the bonding obligation. Research activities sometimes use abandoned mines or portions of active mines to evaluate new plant species or to conduct reclamation research. The Forest Service also proposed that an operator's liability under performance bond in § 805.13(a) be released if the responsibility for revegetation has been assumed by Federal or State agencies or entities for reclamation, research activities, or demonstration of reclamation technology, provided that the responsible agency or entity will provide for normal reclamation. The same proposal is included as part of a formal petition to amend rules issued June 18, 1980 (45 FR 4116) considered for public comment and discussion under proposed rulemaking. Therefore, OSM

has elected not to make any changes herein.

§ *805.13(b)(1).*—This Paragraph was proposed in order to adapt the revegetative liability provisions of § 816.116(b) to those of bonding liability as required by Section 509 of the Act. In February 1980, the U.S. District Court for the District of Columbia ruled that initiation of the liability period, as defined in § 816.116, was inconsistent with Section 515(b)(20) of the Act. Therefore, the proposed change will not be made. The bond liability period will commence after the last year after augmented seeding, fertilization, irrigation, or other work consistent with Section 515(b)(20) of the Act. Also, this Section extends the liability period if augmented practices are applied.

§ *805.13(b)(2).*—This Paragraph appeared in the proposed rules in response to petitioners who felt that certain "good husbandry" practices should be allowed as an incentive for an operator to continue reclamation efforts on an area. The provision requires a regulatory authority to approve and document acceptable practices as part of the initial or amended permit which if exceeded will constitute augmentation.

§ *805.13(b)(3).*—Comments were received discussing whether or not to allow selective husbandry practices without extending the period of bond liability. Most commenters felt that this provision provides essential clarification of factors which might extend the liability period. Others felt this provision was required to allow good conservation practices without punishment. A few commenters felt that any seeding, fertilization, or irrigation is contrary to the Act and should not be allowed. It is important to note that the distinction between augmented and normal conservation practices must be identified and that OSM requires that practices be documented and supported as normal for similar land uses in the geographic area in order to be considered. OSM proposed that § 805.13(b)(3) be amended because it believes that permanent reclamation success may occasionally require selective husbandry practices exclusive of augmented seeding, fertilization, or irrigation. Therefore, such practices may be allowed if the permittee can demonstrate that discontinuance of such measures after the period of liability expires will not reduce the probability of continuous permanent revegetation success. Corrective action such as pest and vermin control, pruning, and repair of any rills and gullies, and any reseeding and/or transplanting specifically necessitated because of these actions, should not require reinitiation of the extended liability period if such practices are completed within the first part of the applicable liability period.

§ *805.13(c).*—This proposed Section provided that a portion of a bonded area requiring extension of the liability period might be separated from the original area and bonded separately, if approved by the regulatory authority. It was added at the suggestion of the petitioners to allow a portion of a bonded area to be extended instead of extending bond liability and delaying bond release on the entire area. Commenters generally supported the provisions of § 805.13(c), but felt the terms and conditions needed some clarification. One commenter indicated that the word "contiguous" in § 805.13(c)(2) is confusing and asked whether the term meant that such an area must be a single, distinguishable parcel rather than several scattered parcels. The same commenter also believed that the regulatory authority should be given the discretion of allowing severence of more than one extended-liability parcel.

OSM interprets "contiguous" to mean being in actual contact. Acceptance of the severance of a segment from the whole also calls for it to be isolated and distinguishable. When combined OSM believes these provisions sufficiently define the new area to be bonded. Liability may be extended on several parcels that have been determined to be insignificant, as a whole, to the entire bonded area if they are limited to distinguishable, isolated segments of the bonded area and are not scattered or intermittent occurrences throughout the entire bonded area.

§ *805.13(e).*—This Paragraph was proposed to insert a provision to exempt a bonded area from general revegetation requirements if intensive agricultural land use is approved. Plaintiffs in a suit in the District Court for the District of Columbia (*In Re: Permanent Surface Mining Regulation Litigation* filed May 9, 1979 D.D.C.-Civil Action 79-1144) contended that this reference to an exception to the revegetation standards of Part 816 provided too much latitude in waiving specific revegetation standards. The Department agreed and informed the Court that this Paragraph would be amended to exempt the general revegetation standards only if an intensive agricultural land use was approved. No comments were received. Therefore, this Paragraph has been adopted as proposed.

§ *805.13(f).*—Proposed Paragraph (f) was added at the request of commenters to the petition who suggested that the implementation of the postmining land use is not a requirement of the bond.

A comment was received objecting to the proposal that excludes bonding the implementation of an approved postmining land use. OSM has referred to Section 515(b)(2) of the Act and has determined that the operator is responsible only for restoring the land to a condition capable of supporting the proposed postmining land use; that is, those reclamation actions specified in the reclamation plan. Although the objector has a good point, the statute does not support that interpretation, and the Section is adopted as proposed.

§ *805.13(g).*—Paragraph (g) as proposed would have provided additional clarification of the provisions of Paragraph (c) with respect to segmenting a bonded increment. No specific comments were received, and this Paragraph is adopted as proposed.

§ *805.14 Adjustment of amount.*

Changes in § 805.14 (a) and (b) were proposed at the request of the petitioners to include notification of surety as well as permittee in bond adjustments. OSM proposed notification of all persons involved in bond coverage, as well as the surety and permittee, the other persons to be anyone with a property interest in bond collateral.

§ *805.14(a).*—One commenter suggested that the phrase "or other persons involved in bond coverage" should be replaced with "permittee, surety, or any person with property interest in collateral offered as bond coverage." OSM concurs that this change would eliminate any misconception such as the commenter apparently experienced. The commenter rationalized that any member of the public may feel he or she has a right to request a bond reduction or to receive notice of proposed bond adjustment, because the entire public is indirectly involved in bond coverage due to public-hearing requirements for bond release, and that this provision could require extensive notification duties and delay bond readjustments. OSM feels that the commenter misread the regulation, but has agreed to amend the rule in order to avoid any further confusion. This change in § 805.14(a) has also been inserted in § 805.14(b).

Part 806—Form, Conditions, and Terms of Performance Bonds and Liability Insurance

§ *806.11 Form of the performance bond.*

§ *806.11(a).*—Paragraph (a) as proposed listed alternative bonding methods which a regulatory authority

could adopt for bond coverage. No comments were received on this Paragraph. However, in adopting the final rule an additional method, combined surety/escrow bonding, has been added. The specific requirements of this alternative are explained under Section 806.17 herein.

§ *806.11(b) [originally § 806.11(c)].*—Self-bonding was proposed as a separate Section 806.14 at the request of commenters on the petition who stated that, given the complexity and length of this Paragraph as originally promulgated, the provisions might be more easily addressed if self-bonding were separated.

OSM proposed to delete existing § 806.11(b) and issue it as a new § 806.14 and to redesignate § 806.11(c) as § 806.11(b). Comments and recommendations were requested on bonding alternatives that would better implement Section 509(c) of the Act for approving bonding alternatives. OSM received no substantive comments on the proposed redesignation. Therefore, OSM has redesignated § 806.11(c) as § 806.11(b) with no change in the text. No comments were received suggesting new or innovative alternatives to present bonding methods.

§ *806.12 Terms and conditions of the bond.*

§ *806.12(e).*—This section of the permanent regulations promulgated March 13, 1979, contains terms and conditions of surety bonds. These provisions require the term of the surety bond to last for the life of the mine, noncancellation provisions, and limits on the amount a surety can post. Although § 806.12(e) was not opened for comment or proposed for amendment, a comment concerning the term of the bond was received and testimony heard that cited the restrictions of this section as detrimental to surety involvement in bonding of surface coal mine reclamation operations. A new § 806.17, "Combined surely/escrow bonding," has been added authorizing a provision for variation of surety liability when coupled with an escrow-bond replacement.

§§ *806.12(e)(6)(iii) and 806.12(g)(7)(iii).*—These paragraphs as proposed would provide a compliance period of up to 90 days in which an operator could replace bond coverage if it is lost through bank or surety incapacity. Only favorable comments were received, and these sections are added as proposed.

§ *806.12(g)(2).*—Paragraph (g)(2) as proposed provided that letters of credit be irrevocable, but permitted withdrawal if approved by the regulatory authority as part of the permit and if replaced with other suitable collateral. Commenters felt that clarification of the proposed rule regarding the terms and conditions of the rules governing the use of letters of credit was necessary. This was true both for letters of credit for surface mines and of renewal of bonds under Part 801. Commenters proposed alternative language that incorporates an "extend or forfeit" provision. OSM has considered the comments on this issue and has adopted the provisions by the commenter under section 806.12(g) to clarify the continued use of letters of credit as follows:

(1) Letters of credit are irrevocable during their terms and not indefinitely irrevocable or without termination date.

(2) Letters of credit used under Part 801, which are subject to forfeiture and collection by the regulatory authority if a suitable alternative or extension of the letter of credit is not provided 30 days prior to withdrawal, have been specified in the rule to provide specific requirement for continuous bond coverage.

§ *806.12(h).*—This new section contains rules governing acceptance of real and personal property as collateral. The provisions of § 806.12(h) were proposed as suggested by commenters who cited the value of real and personal property as bond collateral and objected to the current restriction of this valuable asset to self-bonding. Therefore, this provision was proposed as a separate paragraph in Section 806.12. It was expected that this provision could create a problem for some States, and that the type and magnitude of the problem might vary from State to State. Comments by States, in particular, were requested regarding problems which might be anticipated in liquidating real or personal property and whether such liquidation could be handled within their administrative operations. Only one State indicated that liquidation would impose an excessive administrative burden under its practices. Consequently, OSM believes those States that have no difficulty with this provision or that experience problems which do not create excessive burdens should be allowed to accept real and personal property as collateral subject to the restrictions on value, quality and acceptable collateral in the Federal rules.

Section 806.12(h) proposed January 24, 1980, has been redesignated in the final rules as follows:

Proposed	*Has been adopted as*
806.12(h)(2)(iii)(c)	806.12(h)(3)
806.12(h)(2)(iv)	806.12(h)(4)
806.12(h)(2)(iv)(A)	806.12(h)(4)(i)
806.12(h)(2)(iv)(B)	806.12(h)(4)(ii)
806.12(h)(2)(iv)(C)	806.12(h)(4)(iii)
806.12(h)(2)(iv)(D)	806.12(h)(4)(iv)
806.12(h)(2)(iv)(E)	806.12(h)(4)(v)

§ *806.12(h)(1).*—This section as proposed limited real and personal property used for collateral value to property located in the State where the mining is conducted. This provision was restrictive so that a State would have the legal authority to attach and liquidate land in that State in the event of forfeiture. A commenter recommended amendment of proposed § 806.12(h)(1) to allow the perfected first-lien security interest in personal property to include personal property not necessarily located in the State in which mining will be conducted. OSM has determined that the regulatory authority should have flexibility to determine whether to accept first-lien security interest in personal property not located in the State in which mining will be conducted. Section 806.12(h)(1) has been changed to allow the regulatory authority this flexibility. Regulatory authorities are cautioned to consider very carefully the degree of security involved in accepting property outside the State for collateral bonding purposes and, in particular, their ability to locate and gain possession of property and the difficulty they would experience in liquidating the properties in the event of forfeiture of bond.

§ *806.12(h)(2)(ii).*—This section proposed that evaluation of property at fair market value be determined by appraisers appointed by the regulatory authority. One commenter suggested that companies be allowed to select independent appraisers certified in the State in which the property is located. Appraisers appointed by the regulatory authority would be appropriate, the commenter suggested, only in those instances in which the authority felt it was necessary to challenge the appraisal of a company-selected appraiser. Other commenters recommended one appraisal from the permittee and one by the regulatory authority, with the average value binding. OSM in considering these recommendations has accepted them in part. The wording of § 806.12(h)(2)(ii) has been changed to allow appraisals by any certified appraiser. The revised provision requires submission by the permittee of two independent appraisals by appraisers certified in the State where the property is located. Provisions also allow the regulatory authority the flexibility of having certified appraisers help in determining final, acceptable fair market value of property if the submitted appraisals are

questioned. The regulatory authority is ultimately responsible for making the final determination of property value.

§ *806.12(h)(2)(iii)(A).*—This section proposed that attorneys evaluating a leasehold asset be competent and not company affiliated, as determined by the regulatory authority. This provision provides for an impartial evaluation of bond value. One commenter suggested that the regulatory authority has no jurisdiction over approving the competency of attorneys, who are professionals regulated by the courts. OSM agrees and has removed the requirement that the attorney be satisfactory to the regulatory authority, which implied a review of the qualifications of the lawyer by the regulatory authority.

§ *806.12(h)(2)(iii)(B).*—This section stated that an abstracting office must be satisfactory to the regulatory authority. A commenter suggested that under § 806.12(h)(2)(iii)(B) the regulatory authority has no jurisdiction over approving the credentials of abstract offices who are authorized to transact business within the State, that they are regulated by another State agency. OSM agrees and has removed the requirement that an abstract office be satisfactory to the regulatory authority, and only requires that an abstracting office provide title certification.

§ *806.12(h)(3).*—This section provides that real property which is offered as security for bonds may be accepted only after the reclamation standards of phase II are completed on such lands. One commenter suggested that § 806.12(h)(3) (which was proposed as § 806.12(h)(2)(iii)(C)) be changed to allow land which is part of the permit area to be used as security under collateral bonding if not to be mined initially. It is stated that for many operators, particularly small- to medium-size companies, the most valuable, unencumbered asset available for bond collateral is the coal land to be mined. OSM agrees that coal land not yet mined or disturbed and land that has been mined, and on which reclamation standards of phases II and III are complete, have asset value for real-property purposes of collateral bonding. This is evident from the intent to include real property as collateral at its value after reclamation. However, OSM has stipulated that real property, if used for collateral, shall not be mined under any permit, since the continuous value may not be assured throughout the term of the bond. Additionally, land already mined within the permit area cannot be used as security for collateral bonding until after the land has been reclaimed to phase II standards. Section 806.12(h)(2)(iii)(C) has been redesignated as § 806.12(h)(3) and reflects this position and has been incorporated into the rules as proposed.

§ *806.12(h)(4)(iv) [formerly § 806.12(h)(2)(iv)(D)].*—This Section restricted securities under personal property to negotiable securities of the U.S. Government, municipal bonds, and general State revenue bonds.

Commenters on this Section requested that other marketable securities may provide adequate value for bonding purposes, subject to regulatory-authority acceptance. One commenter suggested that "investment-grade" marketable securities be accepted as collateral under this Section. OSM has considered broadening the acceptance of collateral to this type of security in securing the obligation of the permittee under bond. OSM has decided that this suggestion is a good one and has determined that the marketable securities of the major publicly or privately held corporations and companies are valuable assets, the value of which at any given time may be readily determined. The use of securities as collateral does not extend to common or perferred stock, investments subject to a margin call, or any interest in commodities and securities which are not rated by a nationally recognized securities rating service. OSM has changed the wording of this proposed Section by adding a phase which leaves it up to the regulatory authority (1) to decide whether or not the to accept securities proposed for collateral bonding purposes which are not negotiable bonds of the U.S. Government or general revenue bonds of the State and (2) the determine the soundness and value of such securities and the margin (ratio of bond value to market value) which might be acceptable for bonding purposes, and has redesignated this Paragraph as 806.12(h)(4)(iv) for clarity. The only restrictions on the use of marketable securities under collateral bonding are the specific provision for the securities to be those of highest rating assigned by a nationally recognized securities rating service and that the business entity represented in the security not be directly affiliated with the mining operation. This change is also reflected in the amended definitions of collateral bonds under Section 800.5.

§ *806.12(h)(4)(v) [formerly Section 806.12(h)(2)(iv)(E)].*—This Section required that certificates of deposit be federally insured and that the depository be acceptable to the regulatory authority. One commenter argued that limiting securities, other than U.S. Government securities used for collateral bonding, to only federally insured (FDIC/FSLIC) accounts is impractical, because a bond in the amount of tens of millions of dollars would require securities purchased from hundreds or thousands of different financial institutions. OSM disagrees, since as of early 1980, amounts of up to $100,000 are insured by the FDIC/FSLIC. In addition, State-chartered financial institutions have accounts insured for various amounts. Because the provision is available to all operators, OSM has decided to retain this provision, even if some operators, large ones in particular, encounter slight inconvenience. The value of the insurance—reducing the risk to the regulatory authority—outweighs the inconvenience of this requirement. Therefore, no change has been made. However, the Section has been redesignated as § 806.12(h)(4)(v) from § 806.12(h)(2)(iv)(E) as proposed.

§ *806.12(i).*—A new § 806.12(i) has been added to clarify the bond value which may be accepted in the use of real and personal property, especially marketable accounts and securities as collateral. This provision is required to establish a basis for determining the acceptable bond value of the collateral. If the total market value were accepted as bond value, the regulatory authority might have inadequate funds available for reclamation under conditions of forfeiture, because of the costs incurred through liquidation, legal expenses, withdrawal penalty, or through fluctuation of the market value due to depreciation, devaluation, or lack of market. This rationale is similar to that used by lending institutions in accepting credit risks in issuing secured loans. The regulatory authority must determine acceptable margins of liquidation value to market value to ensure continued financial assurance throughout the bond period. Additionally, the regulatory authority must evaluate the liquidation plan as part of the analysis of the collateral value to establish the fees involved in converting the collateral into cash. It is assumed that this rationale will apply to all collateral including letters of credit, certificates of deposit, real and personal property, and marketable securities authorized under the final rules. The margin percentages would vary for differing collateral, with those most convertible to cash the highest. This Section is added in conjunction with the acceptance of collateral for purposes of broadening the scope of performance assurance available to coal mine operators.

§ 806.13 Escrow bonding.

OSM proposed escrow bonding as an alternative means of generating bond collateral to cover extended liability in lieu of surety involvement, or paralleling a surety's involvement by compensating for additional increments under cumulative bonding, while having a constant surety bond. Escrow bonding is a form of collateral bonding, developed over a period of time through funds deposited with the regulatory authority or into an account payable only to the regulatory authority, on a coal-production, acreage-affected, or other similar basis. The provision was considered to allow flexibility in accepting bonding alternatives allowed by the Act which States may adopt at their discretion.

OSM believes that escrow bonding is a viable option and included this provision in the proposed rules, as stated in the preamble (45 FR 6028). OSM received two comments concerning escrow bonding. One industry commenter state that escrow bonding would not be a viable option for coal operators because it would tie up limited capital assets. While recognizing that some operators will not find the escrow-bond method viable for their operations, OSM believes that the benefits to other operators are sufficient to justify authorizing such an arrangement.

Escrow bonding is expected to supplement other bonding methods by replacing or adding bond coverage at a rate increasing with mining operations. The concept of escrow bonding as a supplement to other methods would provide the operator with (1) a method to develop a bond alternative which could be used to cover the liability period, (2) a method to develop a collateral bond in a short period to cover long-term facilities over the life of the operations and the subsequent liability period without imposing long-term involvement of surety companies, and (3) a method to compensate for bond increases due to inflation without renegotiating with the surety on all bond adjustments. An example of an escrow situation would occur is an operator posted a surety bond on the initial increment to be mined. By depositing an amount into an escrow account on the basis of production, the operator could establish collateral for the next increment. The original surety bond could remain constant throughout the life of the mine subject to other conditions of § 806.12(e). When mining operations end and the entire permit area is in varying phases of reclamation, the escrow account could be sufficient to cover the amount of bond required for the extended period of liability. This could eliminate a surety's role during the extended-liability period by releasing the surety's liability through provisions of § 807.11. This limited involvement of a surety would probably make it easier for an operator to obtain surety bonding. After reaching the end of the liability period, and approval by the regulatory authority, the balance of the escrow account would be released to the operator as with other collateral bonds.

The other comment, from a surety association, requested clarification of which bond would pay first under joint surety and escrow bond coverage if a bond were forfeited. It was also suggested that escrow funds be used initially to perform reclamation since the principal (operator) is primarily liable. With regard to the question as to which bond should pay first under joint surety and escrow bond coverage, OSM believes the parties involved should specify the order, as part of the bonding arrangement, in a binding agreement signed by the operator and surety. This determination should be made between the surety and the operator and be included in the surety contract, a copy of which is filed with the regulatory authority. The only criterion required by the regulatory authority is that the combination bond be sufficient to cover the full cost of reclamation. If the forfeited bond is in excess of the completed cost of reclamation, the residual money would be returned by the regulatory authority to the appropriate party.

On the basis of the foregoing discussion, OSM has elected to adopt the language proposed under § 806.13, without change.

§ 806.14 Self-bonding [originally § 806.11(b)].

Self-bonding was issued as part of the permanent regulatory program promulgating the statutory provisions of Section 509(c) of the Act which allow a permittee to self-bond under specific conditions. These conditions include a record of continuous operation and a satisfactory financial history. Conditions of bonding in general require sufficient indemnity or collateral for the regulatory authority to complete the reclamation operation if necessary under conditions of forfeiture. In the case of self-bonding, the regulatory authority must be satisfied the the bond under forfeiture has a sufficiently high cash value or that attachable assets may be liquidated for use in contracting for reclamation. Self-bonding has been the subject of much criticism since it was originally proposed.

Comments on self-bonding rules varied, but the most substantive stated that the provisions as proposed lacked the financial assurances necessary to complete reclamation. Commenters felt that an unsecured bond was in violation of the Secretary's own § 806.11(b). OSM received 50 comments on the proposed self-bonding regulations from 10 individuals and organizations. The general issues raised did not necessarily address the specific Sections which were opened, but changes were recommended for many of the provisions for self-bonding.

Some early commenters on the self-bonding regulations issued March 13, 1979, felt that the restrictions imposed in the regulations were unnecessarily severe, and that only the largest operators could consider this method. The surety industry feels if large operators are allowed to self-bond, they would no longer be among the surety industry's most desirable bonding clients.

The self-bonding rules published March 13, 1979, contained conditions which were intended to provide the degree of security necessary to meet the standard of ensuring that adequate funds would be available under forfeiture. The provisions require: (1) net worth to bond amount ratio of 6; (2) the operator to grant a security interest in collateral in favor of the regulatory authority; (3) submission of financial statements, including financial ratios; and (4) a signed agreement personally indemnifying the permittee, officers of corporations, or others signing the agreement. OSM received comments from many commenters including those writing surety bonds, environmentalists, regulators, and coal operators. The commenters felt that the provision for restricting the use of real and personal property to only self-bonding was discriminatory against small- and medium-sized operators, who would be unlikely to be able to meet the other qualifying provisions of self-bonding but who nevertheless have tangible assets in the form of real and personal property. To prevent such discrimination, OSM proposed to remove the real- and personal-property requirement from self-bonding and allow all operators/permittees to consider use of these assets as collateral bond.

Other commenters felt that the net-worth to bond-amount restriction was overly restrictive, by requiring standards of 6 times the bond amount to qualify for self-bonding. Therefore, OSM proposed to delete this provision. Another aspect cited in the comments as

restricting the use of self-bonding was the requirement for a 10-year history of continuous operation and financial history. OSM considered this issue for change, but failed to find adequate support from the documents reviewed. (See preamble 45 FR 6028.)

A number of commenters were concerned about the requirement for a spouse's signature on the indemnity agreement, since an individual could not force a spouse to sign. OSM proposed to clarify this requirement by requiring a spouse to sign only if involved in the business.

In addition to the comments on the specific provisions of self-bonding, commenters cited the length and complexity of the rules as confusing and in need of rearrangement. Therefore, OSM proposed this Section on self-bonding as a separate § 806.14 to provided for this clarification, especially since the issue is included in a separate paragraph of the Act.

Among the most relevant comments received were those which stated that without the use of real and personal property as collateral the regulatory authority had no guarantee that funds would be available, especially under bankruptcy circumstances. Others felt that the use of an indemnity agreement alone would place financial and legal obligations on personal assets beyond the financial ability of the endorsees, and would not necessarily provide sufficient assets under forfeiture. It was pointed out that these persons would be signing as individuals who would be liable for financial assurance of the performance standards.

Other commenters questioned the need for highly detailed financial statements when securities and credit-rating services continually conduct financial analysis and continually analyze market indices. Others pointed out that while detailed provisions of self-bonding require financial data and interest in property, minimum standards for acceptance of ratios and for financial solvency were not specifically addressed.

Some commenters felt that self-bonding should be allowed for qualifying companies, so that the surety bonding market would be available for those who do not qualify. Sureties, on the other hand, stated that operators who could not self-bond under the OSM rules might not be considered for surety bonds, depending on self-bonding criteria of the regulatory authority.

A State regulatory authority pointed out that self-bonding without the requirement for collateral support does not comply with the provisions of the Act or § 806.11(b) of the rules, which require adequate funds be available at all times for reclamation and that there be substantial economic incentives for compliance. An operator in financial distress would (1) not have adequate funds to forfeit by which to complete reclamation and (2) have no economic benefit to be gained by completing the reclamation.

Other commenters cited including a need to develop a rationale for reviewing self-bonding, and a method for screening the potential self-bonding applicant. Also, they felt that a permittee should be able to understand the basis for qualifying for self-bonding before deciding whether to apply.

Therefore, on the basis of the general lack of support of the self-bonding rules as proposed and the need to further evaluate the provisions, OSM has chosen to leave in place the rules as they were published on March 13, 1979 (44 FR 15387). OSM believes that self-bonding as adopted in the permanent program rules provide highly secure financial assurance that reclamation will be completed, because the indemnity agreement provides a financial interest in marketable assets if forfeiture occurs. OSM also believes that the addition of real and personal property as part of collateral bonds and the provision for escrow accounts and combined surety/escrow bonds provide additional methods of self-bonding which are available to all operators.

OSM considered three options in rejecting the proposed amendment to the rules proposed January 24, 1980: (1) To further revise the proposed rules to comply with the commenters' requests, which woud probably require further public comment, (2) to delete self-bonding entirely, or (3) to reinstate the rules issued March 13, 1979, under the new Section 806.14 and further investigate and propose changes and modifications to correct identified deficiencies.

In considering these options, OSM felt that deleting the self-bonding rules entirely would delete a statutory requirement which, although criticized as being overly stringent, nevertheless is considered to provide the adequate degree of assurance the Act intends. Revising the proposed rules to provide adequate cash under forfeiture and to provide economic incentive requires reinstating of the security interest in real and personal property and qualification standards not in the proposed rule. This would further delay the issuance of this rulemaking by requiring further comment and analysis. Therefore, options 1 and 2 were rejected, and option 3 has been selected with the provision that OSM acknowledges the difficulties observed in the original self-bonding provisions and accepts all comments received during this rulemaking for consideration in evaluating further amendments to self-bonding.

OSM intends to conduct a study of alternatives to the original language and identification of implementing qualification guidelines. The proposed study will encompass methods to evaluate companies who should be eligible for self-bonding, methodology for review of financial credentials, guidelines to establish qualifying financial ratios, the nature and effect of operating histories, collateral requirements, corporate and individual liability, risk-analysis techniques, and other specific elements of the detailed provisions in § 806.14 not opened during this rulemaking. OSM will present the results of the study for public comment in a future rulemaking. Until revised, the provisions issued herein shall be used in any self-bonding program for surface coal mining operations.

OSM finds, based on the comments and discussion above, that self-bonding as proposed in the January 24, 1980 (45 FR 6028) rules, does not provide adequate financial assurance to the regulatory authority, and has decided to retain the rules governing self-bonding as they were promulgated March 13, 1979. A regulatory authority finding that amendments are necessary to self-bonding, and that demonstrates adequate financial assurances, can be submitted as a formal request for OSM consideration as a "State Window" under provisions of 30 CFR 731.13 and in accordance with alternative bonding systems under 30 CFR 806.11(b) of this notice.

As was proposed January 24, 1980, however, original § 806.11(b) is redesignated as § 806.14, § 806.11(b)(1) becomes § 806.14(a), and so forth throughout.

§ 806.17 Combined surety/escrow bonding.

Section 806.17 is added to the regulations as an extension of the use of escrow bonds in conjunction with surety coverage. This method resulted from comments from surety and industry to allow a short-term solution to surety liability. One industry commenter expressed concern over the restrictions imposed on the surety companies in writing bond coverage. These restrictions included the long-term nature of the bond and the noncancellation requirements. In a meeting with the Surety Association of America at the Department of the Interior on March 6, 1980, the surety

representative expressed the following reasons for the surety industry's reluctance to issue bonds: (1) long-term commitment, (2) lack of control of bond amount due to adjustment for unforeseen reclamation costs, and (3) delay of bond release due to citizen involvement in the bond-release process.

The commenter cites, for example, the requirement that the regulatory authority not accept a surety bond unless it is noncancellable by the surety for any reason. The commenter sees this as an attempt by OSM to impose its own standards of insurable risks upon the surety industry and to force a merger of the obligations of the surety and the operator not for the life of a bonding contract negotiated at arm's length by the surety and the operator, but for the life of the mine plus up to 10 additional years. It is contended that this forced merger is excessive and unfair and that unless a mechanism is created to balance the projected cost of surety bonding with the projected revenues from providing such an instrument, surety companies will elect not to offer surety bonding.

In answer to these concerns of the surety industry, the commenter suggested a possible solution that would allow short-term bonding of a duration of 1 to 2 years. At the end of the initial period, the operator could replace the surety bond either by renewal or by posting another alternative bond acceptable to the regulatory authority.

OSM has reviewed this proposal and has determined that the provisions for long-term surety bonds must remain unchanged, because the Act requires bond coverage to extend until reclamation has been completed. Therefore, unless a specific alternative coverage is introduced to release a surety liability, the bond must extend for an indefinite term. However, the comment recommending that a provision be developed to allow short-term surety bonds led to the consideration of surety terms which, when combined with other demonstrated financial assurance such as an escrow account, would allow the surety company to avoid long-term commitment, could allow a constant surety bond amount by varying escrow deposit rates to cope with adjustments, and subject the escrow balance rather than the surety bond to public comment. This relief from the burden pointed out by the surety industry is similar to that of substitution of bonds in § 805.15. This alternative would provide the conditions requested by the commenters, but it would obligate an operator to establish an escrow account to ensure adequate substitution upon surety-bond termination. The method as issued provides for a surety bond to be issued for a fixed term and fixed amount, with a guaranteed escrow replacement upon surety bond expiration. The surety bond may be reduced periodically or remain constant, but the total bond amount must equal or exceed the estimated reclamation costs. Conditions of forfeiture for the combined surety/escrow bond method would include failure to maintain the escrow in accordance with the established deposit schedule. The regulatory authority and surety would receive quarterly escrow statements.

Since this bonding method combines surety and escrow methods, but alters the terms of the surety bond from those in § 806.12(e), this alternative has been issued under § 806.17, "Combined surety/escrow bonding," for adoption in State and Federal regulatory programs as deemed appropriate. OSM believes that this method will facilitate surety-industry involvement in the bonding of coal mine reclamation by eliminating some of the more objectionable restrictions.

Part 807—Procedures, Criteria, and Schedule for Release of Performance Bond

§ 807.12 Criteria and schedule for release of performance bond.

§ 807.12(a).—As proposed, this Section would have allowed the regulatory authority discretion to release a portion or all of the performance bond upon completion of reclamation by providing that it "may" release, portions rather than that it "shall" release. Commenters requested that the wording of § 807.12(a) be changed to require the regulatory authority to release specific bond amounts as each phase of reclamation is completed. The proposed language is consistent with Section 519(c) of the Act which states "may," indicating an intention that the regulatory authority have the discretion to release. Thus, to adopt the commenters' suggestion and make release mandatory would be in conflict with the Act. Consequently, OSM feels that no change is required in this Section.

§ 807.12(b).—This Paragraph sets forth the maximum amounts of bond which may be released by the regulatory authority as reclamation phases are achieved. The provisions as published March 13, 1979, allow 60 percent, 25 percent, and 15 percent release for phases I, II, and III, respectively. Industry comments have presented proposals for varying the percentage release and redefinition of the reclamation phases. Several commenters responded to the Department's request in the notice of proposed rules to present alternative bond-release percentages under this Section. Review of the proposals shows the following breakdowns of bond-release percentages:

Percentage of bond released

Phase	Existing rules 30 CFR 807.12	Proposal 1	Proposal 2	Proposal 3
I Backfilling and grading, drainage control, and topsoil replacement	60	[1] 60	60	60
Topsoil replacement and seeding		15		
II Successful vegetation	25	20	30	35
III Termination of liability	15	5	10	5

[1] Does not include topsoil replacement.

Permanent rule § 807.12 interprets bond-release phase I as including the following stages:

(a) Backfilling and regrading: Return of overburden material to achieve rough contour as set forth in the reclamation plan.

(b) Topsoil replacement: Return of the soil horizons which are capable of supporting vegetation, and fine grading of this stratum to finished contours.

(c) Drainage control: Construction of diversion ditches, swales, erosion-control structures, sediment control, and other aspects of fine grading required before initial planting.

In considering a separation of the initial reclamation phase into (1), backfilling, grading, and drainage control, and (2) topsoil replacement and seeding, the following proposals were made by commenters.

Proposal 1 would allow 60 percent of the bond to be released upon completion of backfilling and grading, 15 percent upon completion of topsoil replacement and initial planting, and 20 percent upon achievement of vegetative success, with 5 percent retained during the liability period.

The industry commenters took the position that replacing topsoil and seeding an area should be considered as another phase, separate from backfilling, grading, and drainage control, because backfilling and grading can be performed continuously, whereas topsoiling and seeding are seasonal. They argue that under current rules, bond release on a backfilled and graded area must wait until topsoil replacement and drainage control have been achieved before any release is possible. Section 519(c)(1) of the Act clearly requires that an operator complete backfilling, regrading, and drainage

control before 60 percent of the bond can be released. At the time of completion of backfilling operations alone, only a portion of the 60 percent could be released. Some States, in proposing additional phases of bond release, have specified 40 percent for backfilling and 20 percent for topsoil replacement. This interpretation coincides with the OSM interpretation of the Act. Therefore, OSM considers a 75-percent release of bond upon completion of backfilling, grading, and topsoil replacement, as specified in proposal 1, to be excessive.

Proposal 1 calls for retention of 5 percent of the bond for the extended-liability period as sufficient to repair any problems existing during the 5- or 10-year waiting period.

OSM believes that 5 percent of the total bond might be adequate for repairing isolated occurrences of vegetation failure if the funds were available on an average per-acre basis, but Section 509 of the Act requires sufficient funds for a third party to reestablish revegetation in the event of a failure and does not specify whether reparable or total vegetative failure has occurred. The cost of seedbed preparation, seeding, fertilization, and any augmented practices to ensure vegetative success must be considered in developing the cost of reestablishing revegetation. Therefore, an amount of not less than the original cost to an operator of establishing the vegetation must be used as a basis for the amount retained. This vegetative portion of the bond must be sufficient to cover the contingency of vegetative failure after initial vegetation, as well as covering the initial cost to vegetate if the operator forfeits the bond before conducting initial vegetation.

Proposals 2 and 3 are similar to proposal 1 in that they propose variations in the phase I and phase II percentages. Proposal 2 would allow 30-percent release after successful vegetation, and proposal 3 would allow 35 percent. In addition, the amount to be retained during the liability period would be reduced to 10 percent and 5 percent, respectively.

These proposals request additional bond release at achievement of successful vegetation, which reduces the amount retained during the liability period.

Cost factors for contracting, the scale of operation, and area adjustments must be included in the percentage to be retained. Additionally OSM recognizes that proposals 2 and 3 request that the amount of performance bond to be held during the remainder of the liability period be reduced to 10 or 5 percent, respectively, of the total reclamation cost. It is not apparent whether the 5- and 10-percent values proposed take into account the addition of topsoil, seedbed preparation, or other corrective action which might be required. Therefore, the present figure in the OSM regulations of 15 percent of the total estimated cost of reclamation appears to be justified, in light of the possibility that a State would be contracting for the reclamation including revegetation, administration, contracting expenses, contingency actions, and uncertainty as to the degree of corrective action necessary. To date, commenters have requested reduction of the amount retained from 15 percent to 10 percent or less, but no substantive data has been provided with which to evaluate the conclusion that a reduction is necessary. Therefore, proposals 1, 2, and 3 have been rejected, and no change in the percentages currently specified in Section 807.12 will be made in this rulemaking. Experience may prove the necessity for revising these percentages in the future, but, in the initial implementation of the regulatory program, OSM believes these amounts are realistic.

§ *807.12(b)(2)*.—As proposed, this Section included a requirement governing the amount of bond to be retained to cover revegetation and construction of drainage-control structures on an increment or the entire permit area. A commenter pointed out that the requirement to include reconstruction of any drainage structure on the entire permit area may apply only if the bond covers the entire permit. The intent is to cover all drainage structures cumulatively under each separate increment. Failure to make this intent clear is an oversight, since the bond amount is calculated on an incremental basis and should include drainage structures only on the increment. Although the bond amount is computed to cover a specific increment, under conditions of forfeiture a bond on an increment may extend to the entire permit area. Therefore, language has been added to the final rule to reflect the cost of reconstructing drainage structures on the area covered by the bond.

§ *807.12(c)*.—This Section as proposed eliminated the bond-release formula which tied final percentage released with achievement of phase III reclamation on the entire permit area. A commenter pointed out that there might be confusion as to the difference between release of bond and release of surety. The confusion occurs since liability periods, bond releases, and other milestones are applied to bond coverage. The surety liability covers the life of the mine, but no specific Section addresses when the surety liability terminates. The commenter recommended that a surety be released by an official written notice from the regulatory authority.

OSM feels that this provision would be consistent with the notification of surety in other Sections of Subchapter J. Section 805.13 requires that bond liability extend until reclamation operations have been completed and that the bond be released through provisions of Part 807. OSM feels that no amendment to the regulation is necessary since the suggested provision for notification can be found in § 807.11(f) (2) and (3), where a regulatory authority is required to notify a permittee and other interested parties in writing of its decision to release or not to release all or a part of the performance bond. It is intended that the final bond-release notice and final release of the operator from the permit requirements also release surety liability.

Another commenter felt that this Section provides for an increment to be totally released from bond coverage after phase III reclamation has been achieved, even if the remaining increments of the permit area are in varying phases of mining reclamation or liability. A commenter pointed out that § 807.12(c) appeared to release bond liability on an increment by releasing that increment from the permit area. The preamble for § 807.12 (44 FR 15121) incorrectly referred to release of an increment as part of the permit area after phase III reclamation was completed. However, OSM believes that the land area of a permit must remain intact unless amended through the permitting process. OSM intends this Section to allow total release of bond coverage on an increment before completion of the liability period on the remaining bonded permit area. However, bond liability on any increment within the permit area extends to the entire permit area under conditions of forfeiture. Therefore, no increment can be totally released from the permit area until bond on the last increment is released, unless the permit is amended by the regulatory authority. The final rule reflects the intent of § 808.12(c) in requiring any incremental bond to extend to the entire permit area and requires that no increment be totally released from bond liability for the entire permit area until conditions of phase III reclamation have been met on the entire permit area.

Part 808—Performance Bond Forfeiture Criteria and Procedures

§§ *808.11(c), 808.12(d), and 808.13.*—OSM proposed additional paragraphs under conditions of forfeiture under §§ 808.11(c), 808.12(d), and various Paragraphs of 808.13. No comments were received on these issues, and therefore the proposed rules are being adopted as final.

§ *808.12(c).*—This Section requires that the liability of each bond on any portion of the permit area extend to the entire permit area under conditions of forfeiture, if reclamation funds exceeding those specified for a particular increment are required. The permanent program adopted on March 13, 1979, added this provision at the request of commenters but restricted coverage indirectly only to protection of the hydrologic balance. However, the specific reference to "hydrologic balance" was challenged. Plaintiffs in a suit in the District Court for the District of Columbia challenging some of the permanent program rules (*In Re:* Permanent Surface Mining Regulations Litigation, filed May 9, 1979, D.D.C.-Civil Action 79-1144) contended this restriction was unauthorized by the Act. The Department agreed and informed the Court that this provision will be amended to eliminate the restriction to hydrolgic balance. Therefore, the proposed rule reflected the concept that any bond must extend to any condition on the entire permit area.

One comment concerning proposed Part 808 requested deletion of the last sentence in § 808.12(c), which reads, "Liability under any bond covering any increment of the permit area may extend to the entire permit area." The commenter contended that the concept of incremental bonding is that portions of a bond are tied to specific portions of the permit area and therefore that there is no reason why, even though a complete reclamation plan may apply to the entire permit area, each incremental surety cannot suffice to cover each increment's reclamation independently. In the explanation of incremental bonding in the March 13, 1979, rules, the preamble discussion of § 807.13 (44 FR 15121) stated that the important concept is that while the filing and release of bond liability may be incremental, any bond applicable to a permit extends to all acreage within the permit area. This is stated explicitly in Section 509 of the Act, which requires liability on any bond including separate increments to be conditional upon performance of all the reclamation. Therefore, the last sentence cannot be deleted.

Statements of Significance and Environmental Impact

The Department of the Interior has determined that this document is not a significant rule and does not require a regulatory analysis under Executive Order 12044 and 43 CFR Part 14. The Department of the Interior has determined that amendment of the rules within the scope of this document will not significantly affect the qualify of the human environment. Accordingly, this action is not subject to the environmental impact statement requirements of the National Environmental Policy Act.

Dated: July 31, 1980.

Charles P. Eddy,

Acting Assistant Secretary, Energy and Minerals.

SUBCHAPTER J—BOND AND INSURANCE REQUIREMENTS FOR SURFACE COAL MINING AND RECLAMATION OPERATIONS

PART 800—GENERAL REQUIREMENTS FOR BONDING OF SURFACE COAL MINING AND RECLAMATION OPERATIONS UNDER REGULATORY PROGRAMS

A. Section 800.5 is amended as follows:

1. The definition of collateral bond is revised to read in its entirety as set forth below.

§ 800.5 Definitions.

* * * * *

Collateral bond means an indemnity agreement in sum certain deposited with the regulatory authority or executed by the permittee and supported by one or more of the following—

(1) The deposit of cash in one or more federally insured accounts, payable only to the regulatory authority upon demand;

(2) Negotiable bonds of the United States, a State, or a municipality, endorsed to the order of, and in the possession of, the regulatory authority;

(3) Negotiable certificates of deposit, payable only to the regulatory authority and in its possession;

(4) An irrevocable letter of credit of any bank organized or authorized to transact business in the United States, payable only upon presentation by the regulatory authority;

(5) A perfected, first-lien security interest in real or personal property, in favor of the regulatory authority;

(6) Investment-grade rated securities, having the highest rating issued by a nationally recognized securities rating service, endorsed to the order of, and in the possession of, the regulatory authority, excluding all issues of the type traded on a commodity exchange such as contracts for future delivery of goods.

* * * * *

B. Section 800.11(b)(1) is amended as follows:

1. Paragraph (ii) is redesignated as Paragraph (iii).

2. New Paragraph (ii) is added to read in its entirety as set forth below.

§ 800.11 Requirement to file a bond.

* * * * *

(b)(1) * * *

(ii) A cumulative bond schedule listing the areas covered by the bond and the sequence for release of acreage as it progresses through varying reclamation phases and for the addition of other acreage as it is affected. The amount of bond required to obtain a permit shall include the full reclamation cost of the initial area being affected; or

* * * * *

C. Section 800.13 is amended as follows:

1. Paragraph (a) is revised to read in its entirety as set forth below.

2. Paragraph (d) is revised to read in its entirety as set forth below.

§ 800.13 Regulatory authority responsibilities.

(a) The regulatory authority shall prescribe and furnish forms for filing performance bonds.

* * * * *

(d) The regulatory authority may not accept a self-bond in lieu of a surety or collateral bond, unless the permittee meets the requirements of 30 CFR 806.14 and any additional requirements in the State or Federal program.

* * * * *

A new part 801, proposed January 24, 1980, is added in its entirety to read as set forth below.

PART 801—BONDING REQUIREMENTS FOR UNDERGROUND COAL MINES, COAL-PROCESSING PLANTS, ASSOCIATED STRUCTURES, AND OTHER COAL-RELATED LONG-TERM FACILITIES AND STRUCTURES

Sec.
801.1 Scope.
801.2 Objective.
801.4 Responsibilities.
801.11 Applicability.
801.12 Amount of bond required.
801.13 Period of liability.
801.14 Form of bond.
801.15 Applicability of other sections.
801.16 Subsidence and mine drainage.
801.17 Bond forfeiture.

Authority: Sections 102, 201, 501, 503, 504, 507, 508, 509, 510, 515, 516, 519, and 701 of Pub. L. 95-87; 91 Stat. 448, 449, 467, 468, 470,

471, 477, 479, 480, 486, 495, 498, 501, and 516, (30 U.S.C. 1202, 1211, 1251, 1253, 1254, 1257, 1258, 1259, 1260, 1265, 1266, 1267, and 1269).

§ 801.1 Scope.

This Part establishes bonding procedures applicable to long-term facilities, such as underground mines, coal-processing plants, refuse areas, and other long-term facilities and structures associated with surface and underground coal mining. Such permits may have several renewal terms, or may have a single permit term in excess of 5 years, so long as the surface area affected during the life of the facility remains basically unchanged.

§ 801.2 Objective

The objective of this Part is to set forth special bonding rules for long-term operations to account for differences between short-term and long-term operations and between surface and underground mines.

§ 801.4 Responsibilities.

The regulatory authority shall ensure that bond coverage is provided for long-term surface facilities and surface areas of underground mines subject to the requirements of this Chapter. Specific reclamation techniques required for underground mines and long-term facilities, such as the removal of deposits of coal fines, sealing of shafts and portals, and removal of structures, shall be considered in determining the amount of bond to complete the reclamation and as determined in the associated cost estimates.

§ 801.11 Applicability.

(a) Operations subject to provisions of this Part are—

(1) Portions of underground coal mines which will continuously disturb the surface for a period in excess of 5 years and surface construction activities included under subsidence-control measures and mine-drainage treatment in 30 CFR 801.16;

(2) Coal-processing plants to be operated for more than 5 years from the date a permit is first issued under the regulatory program;

(3) Coal-refuse areas to be operated for more than 5 years;

(4) Coal-loading facilities to be operated for more than 5 years from the date a permit is first issued for it under the regulatory program; and

(5) Long-term coal-related facilities to be permitted for operation longer than 5 years in accordance with 30 CFR 785.21.

(b) Operations listed in Paragraph (a) of this Section, conducted within a permit area for a mine which includes areas or facilities not subject to this Part, may be bonded as a separate increment of the surface mine permit area. If bonded separately, provisions of this Part shall apply to that increment. If bonded as part of the permit area which includes areas or facilities not subject to this Part, bond liability shall continue in accordance with 30 CFR 805.13.

§ 801.12 Amount of bond required.

(a) The regulatory authority shall determine the bond amount necessary to complete reclamation of the area in accordance with 30 CFR 805.11.

(b) The area considered in the reclamation plan shall include the entire area disturbed.

(c) The amount of bond necessary to obtain a permit is the entire performance bond required during the term of the permit.

§ 801.13 Period of liability.

(a) The period of liability for every bond covering a long-term operation shall commence with issuance of a permit and extend until all reclamation, restoration, and abatement work under provisions of the permit have been completed, and the bond released in accordance with Part 807 or replaced in accordance with Paragraph (b) of this Section.

(b) To achieve the liability requirements for long-term operations, continuous bond coverage shall be provided. Bond coverage shall commence with issuance of a permit, cover the initial term of the bond, and be conditioned to extend, replace, or pay the full amount of the bond 120 days prior to the expiration of any bond term, which in no case shall be less than 5 years. Failure to extend or replace bond coverage not less than 120 days prior to expiration shall subject the bond to conditions of forfeiture under Part 808.

§ 801.14 Form of bond.

Performance bonding may be authorized by the regulatory authority in accordance with the methods listed in 30 CFR 806.11. An escrow account may be established on the basis of a coal-production rate, periodic-deposit schedule, or other similar schedule, so that replacement of surety bond with collateral bond in whole or in part may be authorized in accordance with 30 CFR 806.13. Upon development of full bond coverage under an escrow account, any surety bond or indemnity agreement may be released. All bonding methods shall comply with the provisions and conditions set forth in this Part.

§ 801.15 Applicability of other Sections.

Except to the extent that provisions of other Parts of Subchapter J conflict with this Part, all other portions of Subchapter J shall apply to bonding requirements for underground coal mining operations and long-term coal-related facilities subject to this Part.

§ 801.16 Subsidence and mine drainage.

(a) 30 CFR 784.20 and 817.121 through 817.126 shall apply to the protection of surface-owner property rights against potential damage caused by unplanned subsidence. All measures undertaken to conform with 30 CFR 784.20(b) in the prevention of damage to surface facilities through planned subsidence shall be subject to performance bond coverage, and the estimated cost of such measures shall be included under 30 CFR 805.11. In addition, the bond liability shall extend to performance of the construction, site preparation, and relocations approved by the regulatory authority under 30 CFR 784.20(a). Release of bond coverage for construction of control measures to prevent subsidence shall be authorized only after final inspection, acceptance, and approval by the regulatory authority, and shall not be subject to the liability period of 30 CFR 805.13 or the bond-release criteria of 30 CFR 807.12. Procedures for seeking bond release for construction of surface measures shall be conducted in accordance with 30 CFR 807.11. Inspections of the construction of surface control measures shall be coordinated with the surface owner, if possible. If a surface owner refuses to allow an inspection, a separate request to waive inspection shall be sent to the surface owner, by certified mail with return receipt requested. If the regulatory authority receives no response within 30 days of delivery of the notice, or if within such period a response is received which waives the inspection or denies reasonable access for inspection, the regulatory authority may assume that the inspection has been waived and the applicable portion of the bond may be released without inspection having occurred.

(b) Performance-bond liability shall include construction of planned impoundments, conveying systems, and treatment facilities for mine drainage in accordance with the standards of 30 CFR 816.42, 816.48, 816.50, 817.42, 817.48, and 817.50. Bond release for such facilities shall be authorized only after final inspection, acceptance, and approval by the regulatory authority and is not subject to the period of liability of 30 CFR 805.13 or the bond-release criteria of 30 CFR 807.12. Procedures for seeking bond release shall be conducted in accordance with 30 CFR 807.11. Bond liability with respect to mine drainage shall extend to the construction and

ultimate removal of facilities described in the permit application or reclamation plan as associated with the treatment of mine drainage. Bond coverage for any subsequent revegetation on that area previously used as an impoundment shall be subject to liability and releases of 30 CFR 805.13, 807.11, and 807.12. The estimated bond amount computed under 30 CFR 805.11 need not include continuous treatment, monitoring, or potential unpredictable expenses as a result of mine drainage.

§ 801.17 Bond forfeiture.

The regulatory authority shall forfeit a bond pursuant to this Part if—

(a) The operator has not filed a performance bond or other security as required under this Part, 120 days prior to bond expiration; or

(b) The regulatory authority determines that a permittee is subject to forfeiture under the criteria of 30 CFR 808.13(a).

PART 805—AMOUNT AND DURATION OF PERFORMANCE BOND

A. Section 805.13 is amended as follows:

1. Paragraphs (b)(1) through (b)(3) are revised to read in their entirety as set forth below.
2. Paragraph (c) is redesignated as Paragraph (d).
3. Paragraph (c) is added to read in its entirety as set forth below.
4. Paragraph (d) is redesignated as Paragraph (e) and is amended to read in its entirety as set forth below.
5. A new Paragraph (f) is added to read in its entirety as set forth below.
6. A new Paragraph (g) is added to read in its entirety as set forth below.

§ 805.13 Period of liability.

* * * * *

(b)(1) In addition to the period necessary to achieve compliance with all requirements of the Act, this Chapter, the regulatory program, and the permit, the period of liability under performance bond shall continue for a minimum period in accordance with Paragraph (b)(2) of this Section, beginning after the last year of augmented seeding, fertilization, irrigation, or other work.

(2) The minimum period of liability shall continue for not less that 5 years in areas with more than 26.0 inches average annual precipitation, and for not less than 10 years in areas with 26.0 inches or less average annual precipitation. The period of liability shall begin again whenever augmented seeding, fertilization, irrigation, or other work is required or conducted on the site prior to bond release, except as noted in Paragraph (b)(3) of this Section.

(3) The regulatory authority may approve selective husbandry practices, excluding augmented seeding, fertilization, or irrigation, without extending the period of bond liability, if the permittee can demonstrate that discontinuance of such measures after the liability period expires will not reduce the probability of permanent revegetation success. Approved practices may include pest and vermin control, pruning, and repair of any rills and gullies and any reseeding and/or transplanting specifically necessitated by such actions, but shall be normal conservation practices within the region for unmined lands having land uses similar to the approved postmining land use of the area covered by the bond.

(c) A portion of a bonded area requiring extended liability because of augmentation may be separated from the original area and bonded separately upon approval by the regulatory authority. Before determining that extended liability should apply to only a portion of the original bonded area, the regulatory authority shall determine that such portion—

(1) Is not significant in extent in relation to the entire area under the bond; and

(2) Is limited to isolated, distinguishable, and contiguous portions of the bonded area and does not comprise scattered or intermittent occurrences throughout the bonded area.

(d) * * *

(e) If the regulatory authority issues a written finding approving a long-term intensive agricultural land use, the operation shall be exempt from the requirements of 30 CFR 816.111(a) or 817.111(a). Such a finding shall not constitute a grant of an exception of the bond-liability periods of this Section.

(f) The bond liability of the permittee shall include only those actions which the operator is obliged to take under the permit, including completion of the reclamation plan in such a manner that the land will be capable of supporting a postmining land use approved under 30 CFR 816.133(c) or 817.133(c). Actions of third parties which are beyond the control and influence of the operator and for which the operator is not responsible under the permit need not be covered by the bond.

(g) If an area is separated under Paragraph (c) of this Section, that portion shall be bonded separately and the applicable period of liability, in accordance with 30 CFR 805.13(b), shall commence anew. The period of liability for the remaining area shall continue in effect without extension. The amount of bond on the original bonded area may be adjusted in accordance with 30 CFR 805.14.

B. Section 805.14 is amended as follows:

1. Paragraph (a) is revised to read in its entirety as set forth below.
2. Paragraph (b) is revised to read in its entirety as set forth below.

§ 805.14 Adjustment of amount.

(a) The amount of the performance bond liability applicable to a permit shall be adjusted by the regulatory authority as the acreage in the permit area is revised, methods of mining operation change, standards of reclamation change, or when the cost of future reclamation, restoration, or abatement work changes. The regulatory authority shall notify persons involved in bond coverage of any proposed bond adjustments and provide those persons an opportunity for an informal conference on the adjustment. For purposes of this Section, a person involved in bond coverage shall include the permittee, the surety, and any other person with a property interest in collateral posted under this Subchapter who has in writing to the regulatory authority requested such notification at the time the collateral is posted or the interest is acquired, whichever occurs later. The regulatory authority shall review each outstanding performance bond at the time permit reviews are conducted under 30 CFR 788.11, and shall reevaluate those perfomance bonds in accordance with the standards in 30 CFR 805.11.

(b) A permittee, surety, or any person with property interest in collateral offered as bond coverage may request reduction of the required performance bond amount upon submission of evidence to the regulatory authority proving that the permittee's method of operation or other circumstances will reduce the maximum estimated cost to the regulatory authority if it has to complete the reclamation and therefore warrants a reduction of the bond amount. The request shall be considered as a request for partial bond release in accordance with the procedures of 30 CFR Part 807 of this Chapter.

PART 806—FORM, CONDITIONS, AND TERMS OF PERFORMANCE BONDS AND LIABILITY INSURANCE

A. Section 806.11 is amended as follows:

1. Paragraph (a) is revised to read in its entirety as set forth below.
2. Paragraph (b) is redesignated as § 806.14 without text change.
3. Paragraph 806.11(c) is redesignated as § 806.11(b).

§ 806.11 Form of the performance bond.

(a) The form of the performance bond shall be prescribed by the regulatory authority in accordance with the provisions of 30 CFR Parts 805 and 806. The regulatory authority may allow—

(1) A surety bond,

(2) A collateral bond,

(3) An escrow account,

(4) Self-bonding,

(5) Combined surety/escrow bonding, or

(6) A combination of any of these bonding methods.

* * * * *

B. Section 806.12 is amended as follows:

1. Paragraph (e)(6)(iii) is revised to read in its entirety as set forth below.

2. Paragraph (g)(2) is revised to read in its entirety as set forth below.

3. Paragraph (g)(7)(iii) is revised to read in its entirety as set forth below.

5. Paragraph (h) is added to read in its entirety as set forth below.

6. A new paragraph (i) is added to read in its entirety as set forth below.

§ 806.12 Terms and conditions of the bond.

* * * * *

(e) * * *

(6) * * *

(iii) Upon the incapacity of a surety by reason of bankruptcy, insolvency, or suspension or revocation of its license, the permittee shall be deemed to be without bond coverage in violation of 30 CFR 800.11(b). The regulatory authority shall issue a notice of violation against any operator who is without bond coverage. The notice shall specify a reasonable period to replace bond coverage, not to exceed 90 days. During this period the regulatory authority shall conduct weekly inspections to ensure continuing compliance with other permit requirements, the regulatory program, and the Act. Such notice of violation, if abated within the period allowed, shall not be counted as a notice of violation for purposes of determining a "pattern of willful violation" under 30 CFR 843.13 and need not be reported as a past violation in permit applications under 30 CFR 778.14 or 782.14. If such a notice of violation is not abated in accordance with the schedule, a cessation order shall be issued.

* * * * *

(g) Letters of credit shall be subject to the following conditions:

* * * * *

(2) Letters of credit shall be irrevocable during their terms. The regulatory authority may approve the use of letters of credit as security in accordance with a schedule approved with the permit. Any bank issuing a letter of credit for the purposes of this paragraph shall notify the regulatory authority in writing at least 90 days prior to the maturity date of such letter of credit or the expiration of the letter of credit agreement. Letters of credit utilized as security in areas requiring continuous bond coverage shall be forfeited and collected by the regulatory authority if not replaced by other suitable evidence of financial responsibility at least 30 days before the expiration date of the letter of credit agreement.

* * * * *

(7) * * *

(iii) Upon the incapacity of a bank by reason of bankruptcy, insolvency, or suspension or revocation of its charter or license, the permittee shall be deemed to be without bond coverage in violation of 30 CFR 800.11(b). The regulatory authority shall issue a notice of violation against any operator who is without bond coverage. The notice shall specify a reasonable period to replace bond coverage, not to exceed 90 days. During this period the regulatory authority shall conduct weekly inspections to ensure continuing compliance with other permit requirements, the regulatory program, and the Act. Such notice of violation, if abated within the period allowed, shall not be counted as a notice of violation for purposes of determining a "pattern of willful violation" under 30 CFR 843.13 and need not be reported as a past violation in permit applications under 30 CFR 778.14 or 782.14. If such a notice of violation is not abated in accordance with the schedule, a cessation order shall be issued.

* * * * *

(h) Real and personal property posted as a collateral bond shall meet the following criteria:

(1) The applicant shall grant the regulatory authority a mortgage or perfected first-lien security interest in real or personal property.

(2) The instrument creating such mortgage or security interest shall vest such interest in the regulatory authority so as to secure the right and power in the regulatory authority to immediately attach said property concurrent with the issuance of a notice of forfeiture under 30 CFR Part 808 and to sell or otherwise dispose of the property by a public or private transaction, and to establish the regulatory authority as the sole secured creditor with respect to such property, so as to assure the regulatory authority of a preferred claim over all other creditors in case of bankruptcy. For classes of property with respect to which a preferred claim cannot be maintained against subsequent bona fide purchasers for value under the Uniform Commercial Code, the instrument shall require possession of the property by the regulatory authority. The property subject to the security interest shall not be subject to any conflicting or prior security interest. The instrument creating the interest in real property shall be recorded as authorized for fee interests. The instrument creating the security interest in personal property shall be recorded in accordance with, and otherwise conform to, the requirements of the Uniform Commercial Code for perfecting a security interest in the State. In order for the regulatory authority to evaluate the adequacy of the property offered to satisfy this requirement, the applicant shall submit a schedule of the real or personal property which shall be pledged to secure the obligations under the indemnity agreement. The schedule shall include—

(i) A description of the property;

(ii) The fair market value as determined by at least two independent appraisals conducted by appraisers certified in the State in which the property is located. The reasonable expense of the appraisals shall be borne by the permittee, and final acceptance of the value of property for bonding purposes shall be subject to regulatory-authority determination and shall be based on findings by appointed appraisers when deemed necessary;

(iii) Proof of the mortgagor's possession of, and title to, the unencumbered real property within the State which is offered to secure the obligations under the bond. Such proof shall include—

(A) If the interest arises under a Federal or State lease, a status report prepared by a non-affiliated attorney competent to evaluate the asset, and an affidavit from the owner in fee establishing that the leasehold can be transferred to the regulatory authority upon forfeiture; and

(B) If the title is in fee, a title certificate or similar evidence of title and encumbrances prepared by an abstract office authorized to transact business within the State.

(3) The property may include land which is part of the permit area only after reclamation standards of phase II are met on such land. The bonding value of land within a permit area may not exceed 85 percent of the appraised value if reclaimed to standards of phase III reclamation, based on the value of surrounding land less the value for any coal in place and the current uses of the

land. Land pledged as security shall not be mined under any permit.

(4) Proof that the person granting the security interest holds possession of, and title to, personal property within the State which is offered to secure the obligation of the permittee under the bond. Evidence of such ownership shall be submitted in a form satisfactory to the regulatory authority. The regulatory authority may accept a perfected first-lien security interest in negotiable bonds of the U.S. Government, general revenue bonds of the State, municipal bonds, or rated marketable securities, excluding commodity issues, of non-affiliated companies registered under the Federal Securities Act, which are rated at the highest rating offered by a nationally recognized securities rating service. The ratio of bond value to market value of each security or bond shall be determined by the regulatory authority on the basis of its marketablity and a financial analysis. The personal property offered shall not include—

(i) Property in which a security interest is held by any other person;

(ii) Goods which the operator sells in the ordinary course of his or her business;

(iii) Fixtures;

(iv) Securities which do not meet the standards of Paragraph 806.12(h)(4); or

(v) Certificates of deposit which are not federally insured or are issued by a depository that is unacceptable to the regulatory authority.

(i) The estimated bond value of all collateral posted as bond assurance under 30 CFR 806.12(f), (g), and (h) shall be subject to a margin—bond value to market value ratio—determined by the regulatory authority. This margin shall reflect legal and liquidation fees, as well as value depreciation, marketability, and fluctuations which might affect the net cash available to the regulatory authority in performing reclamation. The bond value of collateral may be evaluated at any time, but shall be evaluated as part of permit renewal. In no case shall the bond value exceed the market value.

C. Section 806.13 is amended as follows:

1. Section 806.13 is redesignated as § 806.15.

2. Section 806.13 is added to read in its entirety as set forth below.

§ 806.13 Escrow bonding.

(a) The regulatory authority may authorize the operator to supplement a bonding program through the establishment of an escrow account deposited in one or more federally insured accounts payable on demand only to the regulatory authority or deposited with the regulatory authority directly. Contributions to the account may be based on acres affected or tons of coal produced or any other rate approved by the regulatory authority. In all cases, the total bond including the escrow amount, as determined by the regulatory authority in the bonding schedule, shall not be less that the amount required under 30 CFR Part 805 including any adjustments, less amounts released in accordance with 30 CFR Part 807.

(b) Escrow funds deposited in federally insured accounts shall not exceed the maximum insured amount under applicable Federal insurance programs such as by FDIC or FSLIC.

(c) Interest paid on an escrow account shall be retained in the escrow account and applied to the bond value of the escrow account unless the regulatory authority has approved that the interest be paid to the operator. In order to qualify for interest payment, the operator shall request such action in writing during the permit-application process under 30 CFR 800.11.

(d) Certificates of deposit may be substituted for escrow accounts upon approval of the regulatory authority. Provisions of 30 CFR 806.12(f) shall apply to certificates of deposit as a collateral bond.

D. Section 806.14 is amended as follows:

1. Section 806.14 is redesignated as § 806.16.

2. Section 806.14, "Self-bonding," is redesignated from § 806.11(b) to read in its entirety as set forth below.

§ 806.14 Self-bonding

(a) The regulatory authority may accept a self-bond from the applicant under the following conditions:

(1) The applicant shall designate the name and address of a suitable agent to receive service of process in the State where the surface coal mining operation is located.

(2) The applicant, or the applicant's parent organization in the event the applicant is a subsidiary corporation, has a net worth, certified by a certified public accountant, of no less than six times the total amount of self-bond obligations on all permits issued to the applicant in the United States for surface coal mining and reclamation operations.

(3) The applicant grants the regulatory authority a mortgage or security interest in real or personal property located in the State which shall have a fair market value equal to or greater than the obligation created under the indemnity agreement.

(4) The instrument creating such mortgage or security interest shall vest such interest in the regulatory authority so as to secure the right and power in the regulatory authority to immediately attach said property concurrent with the issuance of a notice of forefeiture under Part 808, and to sell or otherwise dispose of the property by a public or private transaction, and to establish the regulatory authority as the sole secured creditor with respect to such property, so as to assure the regulatory authority of a preferred claim over all other creditors in case of bankruptcy. For classes of property with respect to which a preferred claim cannot be maintained against subsequent bona fide purchasers for value under the Uniform Commercial Code, the instrument shall require possession of the property by the regulatory authority. The property subject to the security interest shall not be subject to any conflicting or prior security interest. The instrument creating the interest in real property shall be recorded as authorized for fee interests. The instrument creating the security interest in personal property shall be recorded in accordance with, and otherwise conform to, the requirements of the Uniform Commercial Code for perfecting a security interest in the State. In order for the regulatory authority to evaluate the adequacy of the property offered to satisfy this requirement, the applicant shall submit a schedule of the real or personal property which will be pledged to secure the obligations under the indemnity agreement. The schedule shall include—

(i) A description of the property;

(ii) The value of the property. The property shall be valued at fair market value as determined by an appraisal conducted by appraisers appointed by the regulatory authority. The appraisal shall be expeditiously made, and a copy thereof furnished to the regulatory authority and the permittee. The reasonable expense of the appraisal shall be borne by the permittee; and

(iii) Proof of the mortgagor's possession of, and title to, the unencumbered real property within the State which is offered to secure the obligations under the bond. Such proof shall include—

(A) If the interest arises under a Federal or State lease, a status report prepared by an attorney, satisfactory to the regulatory authority as disinterested and competent to so evaluate the asset, and an affidavit from the owner in fee establishing that the leasehold could be transferred to the regulatory authority upon forfeiture;

(B) If title is in fee, a title certificate or similar evidence of title and encumbrances prepared by an abstract office authorized to transact business within the State and satisfactory to the regulatory authority; and

(C) The property shall not include any lands in the process of being mined, reclaimed, or the subject of this application. The operator may offer any lands the bonds for which have been released. In addition, any land used as security shall not be mined while it is security.

(iv) Proof that the person granting the security interest holds possession of, and title to, personal property within the State which is offered to secure the obligation of the permittee under the bond. Evidence of such ownership shall be submitted in a form satisfactory to the regulatory authority. The personal property offered shall not include—

(A) Property in which a security interest is held by any person;

(B) Goods which the operator sells in the ordinary course of his or business;

(C) Fixtures;

(D) Securities which are not negotiable bonds of the U.S. Government or general revenue bonds of the State;

(E) Certificates of deposit which are not federally insured or are issued by a depository that is unacceptable to the regulatory authority.

(5) The applicant, or the applicant's parent organization in the event the applicant is a subsidiary corporation, shall have demonstrated to the satisfaction of the regulatory authority a history of financial solvency and continuous operation as a business entity for 10 years prior to filing the application. For purposes of this Paragraph, such demonstration shall include a financial statement in sufficient detail to allow the regulatory authority to determine whether it is reasonable to predict from the ownership patterns and financial history of the applicant that it will be financially capable of completing all reclamation requirements throughout the life of the surface coal mining and reclamation operation. Such statement shall include, at the minimum—

(i) Identification of operator by—

(A) For corporations, name, address, telephone number, State of incorporation, principal place of business, principal office in the State where the operation is located, the name, title, and authority of persons signing the application, and a statement of authority to do business in the State where the operation is located; and

(B) For all other forms of business enterprises, name, address, and telephone number and statement of how the enterprise is organized, law of the State under which it is formed, place of business, relationship and authority of the person signing the application, and principal office in the State where the operation is located;

(ii) Estimated amount of bond likely to be required after approval of the permit which will be determined in accordance with 30 CFR Part 805, and the estimated maximum liability likely to be required during the life of the mine;

(iii) History of other bonds procured by the operator for mining operations in any State, including—

(A) Names of sureties, if any, for outstanding bonds;

(B) Amounts of outstanding bonds;

(C) Name of any surety which denied any bond; and

(D) Unsatisfied claims against any bond;

(iv) Brief chronological history of business operations conducted within the last 10 years, including information showing—

(A) Continuous operation for the 10-year period, and

(B) The jurisdiction within which each operation has been conducted;

(v) A financial statement, including—

(A) Audited financial statements prepared and certified by a disinterested independent certified public accountant. All statements shall be prepared following generally accepted principles of accounting and shall include—

(*1*) A common-size comparative balance sheet which shows assets, liabilities, and owner's equity for the preceding 10-year period. The regulatory authority shall have the discretion to increase this length of time to any period which is necessary to show financial solvency and continuous operation. The common-size comparative balance sheet shall be detailed with regard to owner's equity, especially retained earnings, so as to set forth a series of retained-earnings statements showing the changes that have occurred in retained earnings during the required period of time;

(*2*) A common-size comparative income statement which shows all revenues and expenses for the preceding 10-year period or for such longer time as is required for the common-size comparative balance sheet; and

(*3*) A statement of the operator's working capital and an analysis of assets and liabilities which shall include the following calculation for each year covered by the common-size comparative balance sheet and income statement—

(*i*) A schedule showing the percentage of each classification of current assets to total current assets;

(*ii*) The current ratio;

(*iii*) The acid-test ratio;

(*iv*) The liquidity ratio;

(*v*) The asset ratio; and

(*vi*) The return on investment;

(*4*) In addition to the above, all ratios must be calculated with the bond amount added to the operator's current or total liabilities; and

(*5*) A ratio of the operator's capital assets subject to a mortgage or security interest to those liabilities to which the assets are subject. If the offer of real property or collateral for the bond will alter this ratio, this shall be illustrated;

(B) A satisfactory basis to compare all ratios submitted pursuant to (A) above.

(C) The regulatory authority shall have the right to challenge, prohibit, or prescribe the inclusion of any specific item or the value thereof within any of the above statements or ratios. If the value is challenged, the regulatory authority shall appoint an appraiser or appraisers to value the item. Any such appraisal shall be expeditiously made, and a copy thereof furnished to the regulatory authority and the permittee. The reasonable expense of the appraisers shall be borne by the operator. The findings of the appraisal shall be final and binding.

(D) A final determination by an independent certified public accountant regarding the operator's ability to satisfactorily meet all obligations and costs under the proposed reclamation plan for the life of the mine; and

(E) If the regulatory authority deems necessary, evidence of financial responsibility through letters of credit or a rating of securities issued to the applicant by a recognized national securities rating company;

(vi) A statement listing any liens filed on the assets of the permittee or applicant in any jurisdiction in the United States, actions pending or judgments rendered within the last 10 years against the permittee or applicant but not satisfied, and petitions or actions in bankruptcy including actions for reorganization. Each such lien, action petition, or judgment shall be identified by the named parties, the jurisdiction in which the matter was filed, and the case, file, and final disposition or current status of any action still pending; and

(vii) A statement listing any notices issued by the Securities and Exchange Commission or proceedings initiated by any party alleging a failure to comply with any public disclosure or reporting requirement under the securities laws of the United States. Such statement shall

include a summary of each such allegation, including the date, the requirement alleged to be violated, the party making the allegation, and the disposition or current status thereof.

(6)(i) The indemnity agreement has been executed by the applicant, and said agreement has also been executed by—

(A) If a corporation, two corporate officers who are authorized to sign the agreement by a resolution of the board of directors, a copy of which shall be provided;

(B) To the extent that the history or assets of a parent organization are relied upon to make the showings of this Part, the parent organization and every parent organization of which it is a subsidiary, whether first-tier, second-tier, or further removed, in the form of (A) above;

(C) If the applicant is a partnership, all of its general partners and their parent organization or principal investors; and

(D) If the applicant is a married individual, the applicant's spouse;

(ii) The name of each person who signs the indemnity agreement shall be typed or printed beneath the signature. Any person who occupies more than one of the specified positions shall indicate each capacity in which he or she signs the indemnity agreement;

(iii) The indemnity agreement shall be a binding obligation, jointly and severally, on all who execute it;

(iv) For purposes of this Paragraph, *principal investor* or *parent organization* means anyone with a 10-percent or more beneficial ownership interest, directly or indirectly, in the applicant.

(7) If at any time the conditions upon which the self-bond was approved no longer prevail, the regulatory authority shall require the posting of a surety or collateral bond before mining operations may continue.

G. A new § 806.17, "Combined surety/escrow bonding," is added to read in its entirety as set forth below.

§ 806.17 Combined surety/escrow bonding.

(a) The regulatory authority may accept a combined surety/escrow bonding schedule provided that—

(1) A surety bond payable to the regulatory authority is posted in the amount determined under 30 CFR 805.11 for reclamation of each successive increment, and

(2) An interest-bearing escrow account payable to the regulatory authority with a predetermined deposit amount and frequency is established.

(b) Conditions of the combined surety/escrow bonding method shall be as follows:

(1) *Surety bond.*

(i) The term of the surety bond shall be not less than 2 years.

(ii) The amount of the surety bond shall always be sufficient to cover the difference between the escrow balance and the total reclamation cost.

(iii) The surety bond may be reduced in amount, but the liability remaining shall depend on the escrow-deposit rate which shall be subject to provisions of 30 CFR 805.14 and 806.15.

(iv) The surety bond shall be noncancellable by the surety during the bond term.

(v) Surety-bond coverage may be released by the regulatory authority without applying the bond-release criteria of 30 CFR Part 807 at any time during the bond term, provided provisions of Paragraph (b)(2)(vi) of this Section are met or are in accordance with the provisions of bond replacement under 30 CFR 806.15.

(vi) The surety bond is subject to the conditions of bond forfeiture of 30 CFR Part 808, including noncompliance with the escrow-account provisions of Paragraph (b)(2).

(2) *Escrow account.*

(i) The terms and conditions of the escrow account shall be developed jointly by the operator, surety, and regulatory authority. For the purposes of this Section, the development of the escrow account shall be based on a production basis in an amount not less than that required to make the escrow account equal to or greater than the bond requirement within the term of the surety bond as agreed on jointly by the operator, the surety, and the regulatory authority. Deposits to the escrow account by the operator shall be made monthly and so reported to the regulatory authority. Failure to make deposits on schedule shall be just cause for action by the regulatory authority.

(ii) A certified escrow-account balance statement shall be provided quarterly to the surety and the regulatory authority.

(iii) Provisions of the escrow account shall be in accordance with 30 CFR 806.13.

(iv) The deposit amount shall be adjusted to provide for changing reclamation costs in accordance with 30 CFR 805.14. However, when the escrow account equals or exceeds the total bonding amount, the monthly payment of the operator shall continue, at the option of the regulatory authority, in an amount necessary to provide for any foreseeable adjustments.

(v) The escrow account shall be subject to the bond-forfeiture conditions of 30 CFR Part 808.

(vi) The escrow-account balance shall equal the initial bond amount, plus any adjustments required by Paragraph (b)(2)(i), 120 days prior to surety-bond termination, unless the total bond amount required has been previously reduced through the bond-release procedures of 30 CFR Part 807.

(vii) Release of liability under the escrow account shall be subject to the provisions of 30 CFR Part 807.

(c) Provisions of 30 CFR Part 807 may be applied to both surety- and escrow-bond coverage during the bond term.

(d) The surety/escrow combination may be repeated successively or amended during the term by replacing the escrow account with a surety bond, and reestablishing the escrow terms and deposit rate, subject to regulatory-authority approval.

PART 807—PROCEDURES, CRITERIA, AND SCHEDULE FOR RELEASE OF PERFORMANCE BOND

A. Section 807.12 is amended as follows:

1. Paragraph (a) is revised to read in its entirety as set forth below.
2. Paragraph (b) is revised to read in its entirety as set forth below.
3. Paragraph (c) is revised to read in its entirety as set forth below.
4. Paragraph (d) is revised to read in its entirety as set forth below.
5. Paragraph (e)(3) is revised to read in its entirety as set forth below.

§ 807.12 Criteria and schedule for release of performance bond.

(a) The regulatory authority may release portions of the liability under performance bonds applicable to the permit area following the completion of reclamation phases as defined in Paragraph (e) of this Section.

(b) The maximum liability of performance bonds applicable to an increment or permit area which may be released shall be calculated on the following basis:

(1) Release of an amount not to exceed 60 percent of the total bond amount on the increment or permit area upon completion of phase I reclamation.

(2) Release of an additional amount not to exceed 25 percent of the total original bond amount on the permit area or an increment upon completion of phase II reclamation, but in all cases the amount remaining shall be sufficient to reestablish vegetation and reconstruct any drainage structures.

(3) Release of the remaining portion of the total performance bond on the increment or permit area after standards

of phase III reclamation have been attained and final inspection and procedures of 30 CFR 807.11 have been satisfied.

(c) The regulatory authority may choose to release all bond coverage for an increment if the phase III reclamation of the increment is complete. The portion of the permit area being released from bond coverage shall be capable for supporting the proposed postmining land use independent of the successful completion of the reclamation of portions of the permit area still under bond or not yet initially disturbed. No increment shall be totally released from the permit area until conditions of phase III reclamation for the last increment of the permit area have been met.

(d) The regulatory authority shall require performance-bond liability, applicable to the permit area of an increment, in the amount necessary to—

(1) Allow someone other than the operator to complete the approved reclamation plan, achieving compliance with the Act, this Chapter, the regulatory program, and the permit;

(2) Allow someone other than the operator to abate any significant environmental harm to air, water, or land resources, or danger to public health and safety prior to release of the land under the terms of the permit;

(3) Achieve the capability of supporting any alternative postmining land-use plan proposed in the permit, consistent with 30 CFR 816.116, 816.133, 817.116, and 817.133 of this Chapter, including such measures as may be necessary in the event the permittee fails to undertake development within the 2 years required by 30 CFR 806.116(b)(3)(ii) or 817.116(b)(3)(ii) of this Chapter; and

(4) Fulfill the minimum bond amount of $10,000 as required by 30 CFR 805.12.

(e) * * *

(3) Phase III reclamation shall be deemed to have been completed when—

(i) The permittee has successfully completed all surface coal mining and reclamation operations in accordance with the approved reclamation plan so that the land is capable of supporting any postmining land use approved pursuant to 30 CFR 816.133 or 817.133;

(ii) The permittee has achieved compliance with the requirements of the Act, this Chapter, the regulatory program, and the permit; and

(iii) The applicable liability period under § 515(b)(20) of the Act and 30 CFR 805.13(b) of this Subchapter has expired.

PART 808—PERFORMANCE BOND FORFEITURE CRITERIA AND PROCEDURES

A. Section 808.11 is amended as follows:

1. Paragraph (c) is added to read in its entirety as set forth below.

§ 808.11 General.

* * * * *

(c) The regulatory authority may allow the surety to complete the reclamation plan if the surety can demonstrate the ability to complete the reclamation plan; including achievement of the capability to support the alternative postmining land use approved by the regulatory authority. No bond shall be released, except for partial releases authorized under 30 CFR 807.11, until successful completion of all reclamation under the terms of the permit, including applicable liability periods of 30 CFR Part 807.

B. Section 808.12 is amended as follows:

1. Paragraph (c) is revised to read in its entirety as set forth below.

2. Paragraph (d) is added to read in its entirety as set forth below.

§ 808.12 Procedures.

* * * * *

(c) The regulatory authority may forfeit any or all bonds deposited for an entire permit area or any increment thereof in order to satisfy 30 CFR 808.11–808.14. Liability under any bond covering any increment of the permit area shall extend to the entire permit area.

(d) The regulatory authority shall utilize funds collected from bond forfeiture to complete the reclamation plan on the permit area on which bond coverage applies, and to cover associated administrative expenses.

C. Paragraph 808.13(a) is amended as follows:

1. Paragraphs (a)(1) through (3) are added to read in their entirety as set forth below.

§ 808.13 Criteria for forfeiture.

(a) * * *

(1) The permittee has violated any of the terms or conditions of the bond and has failed to take corrective action;

(2) The permittee has failed to conduct the surface mining and reclamation operations in accordance with the Act, the conditions of this Chapter, the regulatory program and the permit within the time required, and the regulatory authority has determined that it is necessary, in order to fulfill the requirements of the permit and the reclamation plan, to have someone other than the operator correct or complete reclamation;

(3) The permit for the area under the bond has been revoked, unless the operator or surety assumes liability for completion of the reclamation work and is, in the opinion of the regulatory authority, diligently and satisfactorily performing such work; or

(Secs. 102, 201(c), 501(b), 503, 504, 507, 508, 509, 510, 515, 516 and 519, Pub. L. 95-87, 91 Stat. 448, 449, 468, 470, 471, 477, 478, 479, 480, 486, 495, and 501 (30 U.S.C. 1201, 1202, 1211, 1251, 1253, 1254, 1257, 1258, 1259, 1260, 1265, 1266, and 1269))

[FR Doc. 80-23663 Filed 8-5-80; 8:45 am]

BILLING CODE 4310-05-M

Federal Register

Wednesday
August 6, 1980

Part IV

Department of Commerce

Office of the Secretary

Preliminary Finding of Need To Accredit Laboratories That Provide Electromagnetic Calibration Services

DEPARTMENT OF COMMERCE

Office of the Secretary

National Voluntary Laboratory Accreditation Program; Preliminary Finding of Need of Accredit Laboratories That Provide Electromagnetic Calibration Services

AGENCY: Assistant Secretary of Commerce for Productivity, Technology, and Innovation.

ACTION: Request for comments on the preliminary finding of need to accredit laboratories that provide electromagnetic calibration services.

SUMMARY: Under the procedures of the National Voluntary Laboratory Accreditation Program (NVLAP) (15 CFR Parts 7a, 7b, and 7c), this notice announces the Department of Commerce's preliminary finding of need to accredit testing laboratories that provide electromagnetic calibration services. The set of standards and test methods initially proposed for inclusion in this laboratory accreditation program (LAP) would be limited to a specific set or group of electromagnetic measurements based upon the formal request for this LAP from Weinschel Engineering. This notice sets out the basis for the preliminary finding of need, including how accreditation of laboratories that provide electromagnetic calibration services would benefit the public interest and why there is a national need to accredit such laboratories. Comments are invited.

DATES: Written comments are due on or before October 6, 1980. A request for an informal hearing may be made before August 21, 1980.

FOR FURTHER INFORMATION CONTACT: Dr. Howard I. Forman, Deputy Assistant Secretary for Product Standards Policy, Room 3876, U.S. Department of Commerce, Washington, D.C. 20230 (202) 377-3221.

SUPPLEMENTARY INFORMATION:

Background

The procedures for the operation of the National Voluntary Laboratory Accreditation Program (NVLAP) were announced in the Federal Register on February 26, 1976 (41 FR 8163-8168, 15 CFR Part 7 which has been recently redesignated 15 CFR Part 7a). That notice, amended by publication in the Federal Register on March 9, 1979 (44 FR 12982-12990 designated 15 CFR Part 7b), on April 25, 1979 (44 FR 24274-24282 designated 15 CFR Part 7c), and on April 21, 1980 (45 FR 26993-26994), described the program as providing a national voluntary system to examine, upon request, the professional and technical competence of private and public testing laboratories that serve regulatory and non-regulatory product evaluation and certification needs. The program will accredit those laboratories that meet the qualifications established under these procedures

Section 7a.4(b) of the NVLAP procedures sets out the requirements to be met by those persons who seek to have the Department of Commerce (DoC) find that there is a need to accredit testing laboratories which provide services relating to a specific product. By letter of February 23, 1977, Bruno O. Weinschel of Weinschel Engineering, Gaithersburg, Maryland, requested DoC to find that there is a need to accredit testing laboratories which provide electromagnetic calibration services for instruments and measurement standards which operate at microwave frequencies. Weinschel Engineering manufactures and sells radio frequency attenuators and attenuation measuring systems, sweep frequency signal generators, microwave power measuring equipment, and power and attenuation standards.

The processing of this request was postponed initially due to a lack of resources. Subsequently, careful consideration was given to the development of a laboratory accreditation program (LAP) under Federal agency (Part 7b) NVLAP procedures and accommodating the request within a possible Federal agency request for a LAP encompassing these calibration services. The National Bureau of Standards (NBS) provides such calibration services. The Part 7b procedures upon which this alternative approach was considered were promulgated on March 9, 1979. In a September 6, 1979 memorandum, John W. Locke, Coordinator of NVLAP, requested guidance from James R. Wright, Deputy Director of the National Engineering Laboratory, on whether NBS might desire to initiate a LAP on calibration services. In a December 18, 1979 memorandum to Mr. Locke, Dr. Wright advised that NBS recommended the use of the General (Part 7a) NVLAP procedures so that the need for the proposed LAP could be established through public debate among interested parties. In that same memorandum, shortcomings in the request were identified which needed to be modified before proceeding with the preparation of a Federal Register notice of a preliminary finding of need. In a letter of January 2, 1980, Howard I. Forman, Deputy Assistant Secretary for Product Standards Policy, asked Dr. Weinschel to supply some additional information responding to Dr. Wright's comments. After further informal discussion between representatives of Weinschel Engineering and the NVLAP staff, Dr. Weinschel submitted a letter on May 14, 1980 to clarify and support his original request. For the purposes of analysis, this letter and the original request letter of February 23, 1977 represent the formal request submitted to comply with section 7a.4(b) of the NVLAP procedures.

This request has been analyzed and evaluated, resulting in a preliminary finding of need to establish a LAP for electromagnetic calibration services as set forth at the conclusion of this notice.

Request for Comments

Interested persons desiring to comment on the preliminary finding of need are invited to submit their comments on or before September 6, 1980, to the Assistant Secretary for Productivity, Technology and Innovation, U.S. Department of Commerce, Room 3864, Washington, D.C. 20230.

Any person desiring to express his or her views in an informal public hearing relative to this preliminary finding of need must do so by communicating that desire in writing on or before August 21, 1980, to the Assistant Secretary for Productivity, Technology, and Innovation. Upon receipt of such a request, informal public hearings will be held to give all interested persons an opportunity to orally present data, views, or arguments in addition to the opportunity to make written submissions. If deemed appropriate, hearings may be held at two locations, one of which will be east of the Mississippi River and the other west thereof. Notice of any hearings will be published in the Federal Register at least 20 days in advance thereof. A transcript will be made of any oral presentations.

Comments are invited particularly to determine whether there is a need to establish a LAP for "electromagnetic calibration services." The specific standards and test methods identified by the requestor would be included in the LAP. As a result of comments in response to this preliminary finding of need, additional standards and test methods directly related to electromagnetic calibration services could be included.

Procedure Following Receipt of Comments

Upon receipt of all written and oral comments and testimony, a thorough evaluation of the comments and testimony will be undertaken. Upon completion of that evaluation, a notice will be published in the Federal Register announcing a final finding of need to accredit testing laboratories which provide "electromagnetic calibration services," or announcing withdrawal of the preliminary finding of need. The notice will set out the basis for a final finding of need or for the withdrawal of the preliminary finding of need.

If a final finding of need is published, the NVLAP procedures call for the establishment of a National Laboratory Accreditation Criteria Committee for calibration services or use of an existing committee. Since there is no existing criteria committee with expertise in this area, a new committee would have to be formed. In accordance with the Federal Advisory Committee Act (Pub. L. 92-463), a charter setting forth the objectives and scope of the committee's activity, a description of the duties for which the committee is responsible, and an estimated number and frequency of committee meetings would be prepared. The NVLAP procedures require that a separate notice be published in the Federal Register announcing DoC's intention to form such a committee simultaneously with the publication of any final finding of need. Furthermore, the separate notice would outline the size and basis for selection of the committee members. Comments on the objectives and scope of the Committee and on the size and basis for selection of the members of the committee are also invited at this time.

Documents in Public Record

The documents mentioned or otherwise referenced in this notice are part of the public record and are available for inspection and copying in DoC's Central Reference and Records Inspection Facility (CRRIF), Room 5317, Main Commerce Building, 14th Street between E Street and Constitution Avenue, NW., Washington, D.C. 20230.

All written and oral comments and testimony in response to this notice will be made part of the public record and will be available for inspection and copying at CRRIF.

Issued: August 1, 1980.

Howard I. Forman,

Acting Assistant Secretary for Productivity, Technology and Innovation.

Preliminary Finding of Need

The request of Weinschel Engineering that DoC find that there is a need to accredit testing laboratories which provide electromagnetic calibration services has been carefully considered. The analysis of the request is contained in the report entitled "NVLAP Summary and Analysis Report, Electromagnetic Calibration Services."

Identification of the Product (Section 7a.4(b)(1))

The requestor identified the product (as defined in section 7a.3(a)) as electromagnetic calibration services for instruments and measurements standards which operate at microwave frequencies. The request is limited to calibration services for microwave power and attenuation measurements. The instruments for the power measurements include bolometric power meters, bolometric detectors, bolometric units, bolometric mounts and bolometric-coupler units. The instruments for the attenuation measurements include fixed and variable attenuators.

NVLAP procedures allow standards and test methods to be added to a LAP once a LAP is established if the standards and test methods fall within the boundaries established by the definition of the product for the LAP. The specific standards and test methods identified by the requestor would be included in the LAP. At some future date, or even as a result of comment in response to this preliminary finding of need, additional standards and test methods directly related to electromagnetic calibration services could be included.

Text of Applicable Standards and Test Methods (Section 7a.4(b) (2) and (3))

The requestor identified the applicable standards and test methods as those given in the Institute for Electrical and Electronic Engineers (IEEE) documents IEEE-STD-470-1972, "IEEE Standard Application Guide for Bolometric Power Meters" and "IEEE-STD-474-1973", "IEEE Standard Specifications and Test Methods for Fixed and Variable Attenuators, DC to 40 GHz." As noted in the identification of the product, the electromagnetic calibration services would be limited to microwave power and attenuation measurements. The requestor suggests specific ranges and uncertainties for these measurements. If this LAP is established, laboratories will be accredited for a specific range of measurements with a specified uncertainty within the capability of the equipment possessed by each laboratory. Of course, the range and uncertainty for which DoC will grant accreditation cannot exceed the capability of NBS. It is essential that an accredited laboratory's reference standards be traceable to the appropriate national standards of measurement. In this context traceability means that each instrument used for calibration purposes has itself been calibrated against an instrument of higher quality to the level at which the higher quality instrument is the accepted national standard. The limits of range and uncertainty which would be available for each measurement area offered in the LAP would be established by the DoC based upon advice from the advisory committee to be organized if a final finding of need is determined. The requestor's suggestions, pertinent comments from the public, NBS expertise, as well as the expertise of the committee members themselves would provide the input for determining ranges and uncertainties.

Basis of Need (Section 7a.4(b)(4))

The requestor includes in his request information addressing each of the five items set out in section 7a.5 of the NVLAP procedures. This information is incorporated into the discussion under the section of this notice entitled, *"Basis for Preliminary Finding of Need for Accrediting Laboratories That Provide Electromagnetic Calibration Services (Section 7a.5)."*

Number of Laboratories and Users (Sections 7a.4(b)(4) (i) and (ii))

The requestor provided a list of 69 industry and 15 government laboratories which perform calibration services at radio and microwave frequencies and claimed that these laboratories have a potential need for accreditation or would be users of accredited laboratories. These laboratories are listed in the 1975 edition of the "Directory of Standards Laboratories" prepared by the National Conference of Standards Laboratories (NCSL). The 1979 edition of the NCSL directory lists about 160 industry and 25 government laboratories capable of performing calibration services at radio and microwave frequencies.

The requestor asserted that the number of users which would desire the services of accredited laboratories is difficult to determine, but potentially includes all electronic equipment manufacturers and users. No listing of

users of those laboratories which provide calibration on a fee basis was available to the requestor. However, the requestor indicated that NBS, as of 1977, calibrated about 325 reference standards or instruments per year for electromagnetic quantities. More recent data indicates that NBS calibrates about 300–400 reference standards per year.

In view of the above information, it is concluded that the submitted request meets the requirements of section 7a.4 of the NVLAP procedures.

Basis of Preliminary Finding of Need for Accrediting Laboratories That Provide Electromagnetic Calibration Services (Section 7a.5)

The basis for this preliminary finding of need, keyed to the information items listed in section 7a.5 of the NVLAP procedures, is as follows:

(1) *Whether the establishment of general or specific criteria and other conditions for accrediting testing laboratories that provide electromagnetic calibration services would benefit the public interest (section 7a.5(a)).* Criteria and other requirements for accrediting laboratories would benefit the public interest by—

(a) Providing a measure of assurance for tests of conformance with accepted standards;

(b) assuring a common basis for quantitative measures of conformance with these standards;

(c) providing a mechanism for assurance that measurements and calibrations made by the private sector are equivalent to those made by government laboratories; and

(d) addressing regulatory concern for the accuracy of test results in certain consumer product and environmental areas.

(2) *Whether there is a national need to accredit testing laboratories for electromagnetic calibration services beyond that served by any existing laboratory accreditation programs in the public and private sector (section 7a.5(b)).* Although NBS has provided calibration services for over 70 years, the tremendous growth of the industry particularly in the electrical and electronics area has forced NBS progressively to restrict its services to non-routine measurements, then to measurement standards only, and then to measurement laboratory reference standards only. These restrictions have required establishment of additional calibration levels which increase the uncertainties and the number of calibration laboratories, thereby reducing the efficiency of resource utilization. Facilities are no longer readily available to obtain measurements of electromagnetic devices (other than reference standards traceable to a common national standard) without maintaining a calibration facility equivalent to that of a national laboratory. The Department of Defense (DoD) has established such facilities, but they are not available to non-Defense contractors. The need for an alternative to having calibration services provided by NBS exists in instances where the cost, time, or uncertainty of NBS services is too great, where the service is not available from NBS, when the number of calibrations to be made exceeds the resource capabilities of NBS, or when the shipping of sensitive instruments to NBS is impractical because of possible damage to such instruments. The need for accreditation is dependent upon the scope of calibration services available from NBS. NBS does not disagree with the requestor's assertion regarding the scope of the calibration services it offers in the microwave spectrum.

Calibration is the cornerstone on which all other measurements rest. Without properly executed calibrations, quality test data cannot be produced. The validity and reliability of the calibration chain (i.e., traceability to national standards) must be affirmed. Thus, the need for a formal means of developing and recognizing competent laboratories that provide certain types of calibration services seems indicated. The National Association of Testing Authorities (NATA) of Australia considers the accreditation of a full range of calibration services to be a major factor in improving the quality of testing provided by Australia's laboratories. In announcing the establishment of the British Calibration Service, the British government published the following:

> "The state of measurement science and practice in a country is one of the surest signs of its technical efficiency. Modern industrial technology depends on accurate measurement. The country requires both a comprehensive system of national standards of measurement, tied to the recognized international standards, and also facilities for checking, or calibrating measuring instruments and other test gear against such standards so that their accuracy can be authenticated."

Based on the experience of these and other countries' systems, a system of accrediting laboratories to perform calibration services in this country appears desirable. International recognition of our nation's laboratories may depend upon the validity and reliability of our calibration chain.

NBS does offer measurement assurance programs (MAPs), but these programs do not include evaluation of a laboratory against specified criteria. MAPs relate only to an assessment of results obtained by the laboratories when measuring reference materials and are generally restricted to primary international standard (SI) units. In effect, a MAP is similar to the proficiency testing requirements of a LAP which represent only one of three elements used to evaluate the competence of a laboratory. Further, participation in a MAP does not provide formal recognition.

(3) *Whether for electromagnetic calibration services, there is in existence a standard important to commerce, consumer well-being, or public health and safety (Section 7a.5(c)).* Many standards requiring electromagnetic calibration services are important to commerce, consumer well-being, and the public health and safety. The requestor identified standards developed by several organizations, including the Federal Communications Commission (FCC), and the Occupational Safety and Health Administration (OSHA), and provided a brief statement indicating the benefit of each set of standards established by these organizations. Specific parts of the FCC Rules and Regulations were cited which indicate the importance placed upon power and attenuation measurements particularly on radio frequency devices to assure compliance with FCC standards. Also, the requestor identified the specific subsection of OSHA regulations entitled "Nonionizing Radiation," which defines radio frequency and microwave radiation levels that should not be exceeded. Both the FCC and OSHA regulations indicate that the IEEE standards are acceptable for use in power and attenuation measurements. Thus, assuring the quality of measurements in these areas is deemed important to commerce, consumer well-being, and the public health and safety.

(4) *Whether there is in existence a valid testing methodology (Section 7a.5(d)).* The IEEE standards identified by the requestor provide test methods (i.e., calibration procedures) for use in calibrating electromagnetic power and attenuation measuring instruments. If any requests are received to add other standards and test methods to this LAP and if a final finding of need is established, they will be carefully reviewed for possible addition to the LAP.

(5) *Whether it is feasible and practical to accredit testing laboratories*

that provide electromagnetic calibration services (Section 7a.5(e)). DoC is not aware of any characteristic of the IEEE standards or of laboratories in which such calibrations would typically be performed as would make an electromagnetic calibration services LAP less feasible and practical than the other LAPs now in the program. The requestor claimed that the MAPs offered by NBS provide a mechanism which makes it feasible and practical to accredit testing laboratories for calibration services. Such MAPs are comparable to proficiency testing programs in that they help laboratories check their traceability to primary standards. If available, a MAP can and probably would be employed in this proposed LAP as an accreditation requirement. Based on this NBS experience, it is deemed feasible and practical to accredit testing laboratories that provide electromagnetic calibration services.

Preliminary Finding of Need

The request to find that there is a need to accredit testing laboratories that provide electromagnetic calibration services has been carefully examined and analyzed. Based on that examination and analysis, which are described above, it is preliminarily found that a need exists to accredit testing laboratories that provide electromagnetic calibration services. It is proposed that if a final finding of need is determined this LAP would initially include the two IEEE standards identified by the requestor as IEEE-STD-470-1972, "IEEE Standard Application Guide for Bolometric Power Meters" and IEEE-STD-474-1973, "IEEE Standard Specifications and Test Methods for Fixed and Variable Attenuators, DC to 40 GHz." Other standards and test methods would be added in the future, as requested, if they meet the requirements of the NVLAP procedures.

[FR Doc. 80-23682 Filed 8-5-80; 8:45 am]
BILLING CODE 3510-13-M

federal register

Wednesday
August 6, 1980

Part V

Department of Agriculture

Federal Grain Inspection Service

Grain Inspection; Assignment of Geographic Areas; Indiana

DEPARTMENT OF AGRICULTURE

Federal Grain Inspection Service

Assignment of Geographic Area to the Frankfort Grain Inspection, Inc., Frankfort, Ind.

AGENCY: Federal Grain Inspection Service.

ACTION: Notice.

SUMMARY: This notice announces assignment of geographic area to the Frankfort Grain Inspection, Inc., Frankfort, Indiana, for the performance of official grain inspection functions under the authority of the United States Grain Standards Act, as amended.

EFFECTIVE DATE: September 5, 1980.

FOR FURTHER INFORMATION CONTACT: J. T. Abshier, Director, Compliance Division, Federal Grain Inspection Service, United States Department of Agriculture, Washington, D.C. 20250, (202) 447-8262. Actions of this kind were anticipated under the provisions of Section 7 of the United States Grain Standards Act as amended (7 U.S.C. 79) and are specifically considered in the Final Impact Statement prepared for this notice. Thus, the Final Impact Statement describing the options considered in developing this notice and the impact of implementing each option is available on request from the Issuance and Coordination Staff, United States Department of Agriculture, Federal Grain Inspection Service, Washington, D.C. 20250.

SUPPLEMENTARY INFORMATION: This final action has been reviewed under USDA procedures established in Secretary's Memorandum 1955 to implement Executive Order 12044, and has been classified as "not significant."

The Frankfort Grain Inspection, Inc. (the "Agency"), RR 2, Frankfort, Indiana 46041, was designated as an official agency under the United States Grain Standards Act, as amended (7 U.S.C. 71 *et seq.*) (the "Act"), for the performance of official grain inspection functions on August 25, 1978. The designation also included an assignment of geographic area, on an interim basis, within which this Agency would operate. Geographic areas are assigned to each official agency pursuant to Section 7(f)(2) of the Act.

The Act provides that not more than one official agency shall be operating at one time within an assigned geographic area.

The proposed geographic area assigned on an interim basis to the Agency was announced in the January 12, 1979, issue of the Federal Register (44 FR 2655). No comments were received. Accordingly, after due consideration of all information available to the United States Department of Agriculture, the geographic area shall remain as originally proposed.

The geographic area assigned to the Agency is:

Bounded: on the North by the northern Fulton County line;

Bounded: on the East by the eastern Fulton County line south to State Route 19; State Route 19 south to State Route 114; State Route 114 southeast to the eastern Fulton and Miami County lines; the northern Grant County line east to State Route 221; State Route 221 south to State Route 18; State Route 18 east to the Grant County line; the eastern Grant County line; the southern Grant County line; the eastern Tipton County line; the eastern Hamilton County line south to State Route 32;

Bounded: on the South by State Route 32 west to the Boone County line; the eastern and southern Boone County lines; the southern Montgomery County line;

Bounded: on the West by the western and northern Montgomery County lines; the western Clinton County line; the western Carroll County line north to State Route 25; State Route 25 northeast to Cass County; the western Cass County line; the western Fulton County line.

Exceptions to this geographic area are the following locations situated inside the Agency's area which have been and will continue to be serviced by:

Titus Grain Inspection, Inc.: Buckeye Feed and Supply Company, Leiters Ford, Indiana, in Fulton County; Cargill, Inc., Linden, Indiana, in Montgomery County; and the Andersons, Delphi, Indiana, in Carroll County. These locations have been restated to more accurately describe the location by listing the elevator site serviced rather than by general reference to the city, town, or area in which situated.

A specified service point for the purpose of this notice is a city, town, or other location specified by an agency for the conduct of official inspections and where the agency or one or more of its licensed inspectors is located. In addition to the specified service points within the assigned geographic area, the Agency will provide official inspection services not requiring a licensed inspector to all other areas within its geographic area.

Interested persons may obtain a map of the assigned geographic area and a list of specified service points by contacting the Agency or the Delegation and Designation Branch, Compliance Division, Federal Grain Inspection Service, United States Department of Agriculture, Washington, D.C. 20250, (202) 447-8262.

(Sec. 8, Pub. L. 94-582, 90 Stat. 2870 (7 U.S.C. 79))

Done in Washington, D.C. on: August 1, 1980.

Neil E. Porter,

Acting Director, Compliance Division.

[FR Doc. 80-23727 Filed 8-5-80; 8:45 am]

BILLING CODE 3410-02-M

Assignment of Geographic Area to the Winchester Grain Inspection, Winchester, Ind.

AGENCY: Federal Grain Inspection Service.

ACTION: Notice.

SUMMARY: This notice announces assignment of geographic area to the Winchester Grain Inspection, Winchester, Indiana, for the performance of official grain inspection functions under the authority of the United States Grain Standards Act, as amended.

EFFECTIVE DATE: September 5, 1980.

FOR FURTHER INFORMATION CONTACT: J. T. Abshier, Director, Compliance Division, Federal Grain Inspection Service, United States Department of Agriculture, Washington, D.C. 20250, (202) 447-8262. Actions of this kind were anticipated under the provisions of Section 7 of the United States Grain Standards Act as amended (7 U.S.C. 79) and are specifically considered in the Final Impact Statement prepared for this notice. Thus, the Final Impact Statement describing the options considered in developing this notice and the impact of implementing each option is available on request from the Issuance and Coordination Staff, United States Department of Agriculture, Federal Grain Inspection Service, Washington, D.C. 20250.

SUPPLEMENTARY INFORMATION: This final action has been reviewed under USDA procedures established in Secretary's Memorandum 1955 to implement Executive Order 12044, and has been classified as "not significant."

The Winchester Grain Inspection (the "Agency"), 220 North East Street, Winchester, Indiana 47394, was designated as an official agency under the United States Grain Standards Act, as amended (7 U.S.C. 71 *et seq.*) (the "Act"), for the performance of official grain inspection functions on August 31, 1978. The designation also included an assignment of geographic area, on an interim basis, within which this Agency would operate. Geographic areas are

assigned to each official agency pursuant to Section 7(f)(2) of the Act.

The Act provides that not more than one official agency shall be operating at one time within an assigned geographic area.

The proposed geographic area assigned on an interim basis to the Agency was announced in the January 12, 1979, issued of the Federal Register (44 FR 2652). One comment was received. Information was received from the Agency and Indianapolis Grain Inspection & Weighing Service, Inc., Indianapolis, Indiana, regarding grain inspection services in Rush County north of State Route 244 in Indiana. After review of this matter with all parties involved, it was mutually agreed that the Agency was better able to provide more timely service in that specified section of this County and to add that section of this County to the geographic area of the Agency.

After due consideration of all relevant matters and information available to the United States Department of Agriculture, the geographic area assigned to this agency shall be the area within the following counties: Blackford, Delaware, Fayette, Jay, Henry, Madison (east of State Route 13 and north of State Route 132), Randolph, Rush (north of State Route 244), Union, and Wayne, all in Indiana. In Ohio, the area shall include Darke County.

The above has been restated to utilize entire counties and sections of counties, instead of county lines, for clarification purposes and does not alter the geographic area as originally proposed in any way except for the addition of that specified section of Rush County.

A specified service point for the purpose of this notice is a city, town, or other location specified by an agency for the conduct of official inspections and where the agency or one or more of its licensed inspectors is located. In addition to the specified service points within the assigned geographic area, the Agency will provide official inspection services not requiring a licensed inspector to all other areas within its geographic area.

Interested persons may obtain a map of the assigned geographic area and a list of specified service points by contacting the Agency or the Delegation and Designation Branch, Compliance Division, Federal Grain Inspection Service, United States Department of Agriculture, Washington, D.C. 20250, (202) 447-8262.

(Sec. 8, Pub. L. 94-582, 90 Stat. 2870 (7 U.S.C. 79))

Done in Washington, D.C. on: August 1, 1980.

Neil E. Porter,

Acting Director, Compliance Division.

[FR Doc. 80-23728 Filed 8-5-80; 8:45 am]

BILLING CODE 3410-02-M

Assignment of Geographic Area to the Titus Grain Inspection Inc., West Lafayette, Ind.

AGENCY: Federal Grain Inspection Service.

ACTION: Notice.

SUMMARY: This notice announces assignment of geographic area to the Titus Grain Inspection, Inc., West Lafayette, Indiana, for the performance of official grain inspection functions under the authority of the United States Grain Standards Act, as amended.

EFFECTIVE DATE: September 5, 1980.

FOR FURTHER INFORMATION CONTACT: J. T. Abshier, Director, Compliance Division, Federal Grain Inspection Service, United States Department of Agriculture, Washington, D.C. 20250, (202) 447-8262. Actions of this kind were anticipated under the provisions of Section 7 of the United States Grain Standards Act as amended (7 U.S.C. 79) and are specifically considered in the Final Impact Statement prepared for this notice. Thus, the Final Impact Statement describing the options considered in developing this notice and the impact of implementing each option is available on request from the Issuance and Coordination Staff, United States Department of Agriculture, Federal Grain Inspection Service, Washington, D.C. 20250.

SUPPLEMENTARY INFORMATION: This final action has been reviewed under USDA procedures established in Secretary's Memorandum 1955 to implement Executive Order 12044, and has been classified as "not significant."

The Titus Grain Inspection, 111 East Eight Hundred North, West Lafayette, Indiana 47906, was designated as an official agency under the United States Grain Standards Act, as amended (7 U.S.C. 71 *et seq.*) (the "Act"), for the performance of official grain inspection functions on August 31, 1978. The designation also included an assignment of geographic area, on an interim basis, within which this Agency would operate. Geographic areas are assigned to each official agency pursuant to Section 7(f)(2) of the Act.

Also, the Titus Grain Inspection has been incorporated, effective February 6, 1979, and the Agency's name is now Titus Grain Inspection, Inc. (the "Agency"). The change in name does not involve a change in management or ownership.

The Act provides that not more than one official agency shall be operating at one time within an assigned geographic area.

The proposed geographic area assigned on an interim basis to the Agency was announce

[FR Doc. 80- Filed 8-5-80; 8:45 am]

BILLING CODE d in the January 12, 1979, issue of the FEDERAL REGISTER (44 FR 2650). One comment was received. Information was received that the York Richland Grain Elevator, Inc., Earl Park, Indiana, a location outside the Agency's proposed contiguous geographic area, which is presently serviced and was in the past by the Agency, was omitted from the proposed geographic area. This location was proposed to be in the geographic area of the Champaign-Danville Grain Inspection Departments, Inc., Danville, Illinois. After review of this matter with all affected parties, it was mutually agreed that the York Richland Grain Elevator, Inc., shall be added to the Agency's geographic area.

After due consideration of all information available to the United States Department of Agriculture, the geographic area assigned to this Agency is as follows:

Bounded: on the North by the northern Pulaski County line;

Bounded: on the East by the eastern and southern Pulaski County lines; the eastern White County line; the eastern Carroll County line south to State Route 25; State Route 25 southwest to Tippecanoe County; the eastern Tippecanoe County line;

Bounded: on the South by the southern Tippecanoe County line; the eastern Fountain County line; the southern Fountain County line west to U.S. Route 41;

Bounded: on the West by U.S. Route 41 north to the northern Benton County line; the northern Benton County line east to State Route 55; State Route 55 north to U.S. Route 24; U.S. Route 24 east to the western White County line; the western White and Pulaski County lines.

The above has been restated for clarification purposes and does not alter the geographic area as originally proposed in anyway.

In addition, the following locations which are outside of the foregoing contiguous geographic area and which have been and will continue to be serviced by the Agency and shall be considered as part of the Agency's geographic area:

Boswell Grain Company, Boswell, Indiana, in Benton County; The Andersons, Delphi, Indiana, in Carroll County; Dunn Grain, Dunn, Indiana, in Benton County; York Richland Grain Elevator, Inc., Earl Park, Indiana, in Benton County; Buckeye Feed and Supply Company, Leiters Ford, Indiana, in Fulton County; Cargill, Inc., Linden, Indiana, in Montgomery County; and

Raub Grain Company, Raub, Indiana, in Benton County.

Exceptions to this geographic area are the following locations situated inside the Agency's area which have been and will continue to be serviced by Schneider Inspection Service: Central Soya, and Farmers Grain, Winamac, Indiana, in Pulaski County.

These locations have been restated to more accurately describe the locations by listing the elevator site serviced rather than by general reference to the city, town, or area in which situated.

A specified service point for the purpose of this notice is a city, town, or other location specified by an agency for the conduct of official inspections and where the agency or one or more of its licensed inspectors is located. In addition to the specified service points within the assigned geographic area, the Agency will provide official inspection services not requiring a licensed inspector to all other areas within its geographic area.

Interested persons may obtain a map of the assigned geographic area and a list of specified service points by contacting the Agency or the Delegation and Designation Branch, Compliance Division, Federal Grain Inspection Service, United States Department of Agriculture, Washington, D.C. 20250, (202) 447-8262.

(Sec. 8, Pub. L. 94-582, 90 Stat. 2870 (7 U.S.C. 79))

Done in Washington, D.C. on: August 1, 1980.

Neil E. Porter,

Acting Director, Compliance Division.

[FR Doc. 80-23729 Filed 8-5-80; 8:45 am]

BILLING CODE 3410-02-M

Assignment of Geographic Area to the William F. Christen Grain Inspection, Decatur, Ind.

AGENCY: Federal Grain Inspection Service.

ACTION: Notice.

SUMMARY: This notice announces assignment of geographic area to the William F. Christen Grain Inspection, Decatur, Indiana, for the performance of official grain inspection functions under the authority of the United States Grain Standards Act, as amended.

EFFECTIVE DATE: September 5, 1980.

FOR FURTHER INFORMATION CONTACT: J. T. Abshier, Director, Compliance Division, Federal Grain Inspection Service, United States Department of Agriculture, Washington, D.C. 20250, (202) 447-8262. Actions of this kind were anticipated under the provisions of Section 7 of the United States Grain Standards Act as amended (7 U.S.C. 79) and are specifically considered in the Final Impact Statement prepared for this notice. Thus, the Final Impact Statement describing the options considered in developing this notice and the impact of implementing each option is available on request from the Issuance and Coordination Staff, United States Department of Agriculture, Federal Grain Inspection Service, Washington, D.C. 20250.

SUPPLEMENTARY INFORMATION: This final action has been reviewed under USDA procedures established in Secretary's Memorandum 1955 to implement Executive Order 12044, and has been classified as "not significant."

William F. Christen Grain Inspection (the "Agency"), 108 W. Monroe Street, P.O. Box 87, Decatur, Indiana 46733, was designated as an official agency under the United States Grain Standards Act, as amended (7 U.S.C. 71 *et seq.*) (the "Act"), for the performance of official grain inspection functions on October 20, 1978. The designation also included an assignment of geographic area, on an interim basis, within which this Agency would operate. Geographic areas are assigned to each official agency pursuant to Section 7(f)(2) of the Act.

The Act provides that not more than one official agency shall be operating at one time within an assigned geographic area.

The proposed geographic area assigned on an interim basis to the Agency was announced in the January 12, 1979, issue of the Federal Register (44 FR 2651). No comments were received. Accordingly, after due consideration of all information available to the United States Department of Agriculture, the geographic area shall remain as originally proposed.

The geographic area assigned to the Agency is:

Bounded: on the North by the northern Lagrange and Steuben County lines;

Bounded: on the East by the eastern Steuben, Dekalb, Allen, and Adams County lines;

Bounded: on the South by the southern Adams and Wells County lines; the eastern Grant County line sought to State Route 18, State Route 18 west to State Route 221; State Route 221 north to Huntington County; the southern Huntington County and Wabash County lines; and

Bounded: on the West by the western Wabash County line north to Disko, Indiana; State Route 114 northwest to Akron, Indiana; State Route 19 north to Kosciusko County; the western and northern Kosciusko County lines; the western Noble and Lagrange County lines.

A specified service point for the purpose of this notice is a city, town, or other location specified by an agency for the conduct of official inspections and where the agency or one or more of its licensed inspectors is located. In addition to the specified service points within the assigned geographic area, the Agency will provide official inspection services not requiring a licensed inspector to all other areas within its geographic area.

Interested persons may obtain a map of the assigned geographic area and a list of specified service points by contacting the Agency or the Delegation and Designation Branch, Compliance Division, Federal Grain Inspection Service, United States Department of Agriculture, Washington, D.C. 20250, (202) 447-8262.

(Sec. 8, Pub. L. 94-582, 90 Stat. 2870 (7 U.S.C. 79))

Done in Washington, D.C. on August 1, 1980.

Neil E. Porter,

Acting Director, Compliance Division.

[FR Doc. 80-23730 Filed 8-5-80; 8:45 am]

BILLING CODE 3410-02-M

Assignment of Geographic Area to the Schneider Inspection Service, Inc., Lowell, Ind.

AGENCY: Federal Grain Inspection Service.

ACTION: Notice.

SUMMARY: This notice announces assignment of geographic area to the Schneider Inspection Service, Inc., Lowell, Indiana, for the performance of official grain inspection functions under the authority of the United States Grain Standards Act, as amended.

EFFECTIVE DATE: September 30, 1980.

FOR FURTHER INFORMATION CONTACT: J. T. Abshier, Director, Compliance Division, Federal Grain Inspection Service, United States Department of Agriculture, Washington, D.C. 20250, (202) 447-8262. Actions of this kind were anticipated under the provisions of Section 7 of the United States Grain Standards Act as amended (7 U.S.C. 79) and are specifically considered in the Final Impact Statement prepared for this notice. Thus, the Final Impact Statement describing the options considered in developing this notice and the impact of implementing each option is available on request from the Issuance and Coordination Staff, United States Department of Agriculture, Federal Grain Inspection Service, Washington, D.C. 20250.

SUPPLEMENTARY INFORMATION: This final action has been reviewed under USDA procedures established in Secretary's Memorandum 1955 to implement Executive Order 12044, and has been classified as "not significant."

Schneider Inspection Service, Inc. (the "Agency"), 15406 White Oak, Lowell, Indiana 46356, was designated as an official agency under the United States Grain Standards Act, as amended (7 U.S.C. 71 *et seq.*) (the "Act"), for the performance of official grain inspection functions on October 25, 1978. The designation also included an assignment of geographic area, on an interim basis, within which this Agency would operate. Geographic areas are assigned to each official agency pursuant to Section 7(f)(2) of the Act.

The Act provides that not more than one official agency shall be operating at one time within an assigned geographic area.

The proposed geographic area assigned on an interim basis to the Agency was announced in the January 12, 1979, issue of the Federal Register (44 FR 2649). No comments were received. Accordingly, after due consideration of all information available to the United States Department of Agriculture, the geographic area assigned to this Agency is as follows:

Bounded: on the North by the northern Will County line from Interstate 57 east to the Illinois-Indiana State line; the Illinois-Indiana State line north to Interstate 94; Interstate 94 east-northeast to the northern Laporte County line; the northern St. Joseph and Elkhart County lines;

Bounded: on the East by the eastern and southern Elkhart County lines; the eastern Marshall county line;

Bounded: on the South by the southern Marshall and Starke County lines; the eastern Jasper County line south-southeast to U.S. Route 24; U.S. Route 24 west to Indiana State Route 55; Indiana State Route 55 south to the Newton County line; the southern Newton County line west to U.S. Route 41; U.S. Route 41 north to U.S. Route 24; U.S. Route 24 west across the Indiana-Illinois State line to Illinois State Route 1; and

Bounded: on the West by Illinois State Route 1 north to Kankakee County; the southern Kankakee County line west to U.S. Route 52; U.S. Route 52 north to Interstate 57; Interstate 57 north to the northern Will county line.

The above has been restated to utilize county lines where possible for clarification purposes and does not alter the geographic area as originally proposed in any way.

In addition, the following locations, which are outside of the foregoing contiguous geographic area and are to be serviced by the Agency, shall be considered as part of the Agency's geographic area: Central Soya and Farmers Grain, Winamac, Indiana, in Pulaski County; and Tidewater Grain Company, Fort Iroquois Supply and Service, and Summer Elevator, Sheldon, Illinois, in Iroquois County.

An exception to this geographic area is the following location situated inside the Agency's area which has been and will continue to be serviced by:

Champaign-Danville Grain Inspection Departments, Inc.:

Gillespie Grain Company, Pittwood, Illinois, in Iroquois County.

These locations have been restated to more accurately describe the locations by listing the elevator site serviced rather than by general reference to the city, town, or area in which situated.

A specified service point for the purpose of this notice is a city, town, or other location specified by an agency for the conduct of official inspections and where the agency or one or more of its licensed inspectors is located. In addition to the specified service points within the assigned geographic area, the Agency will provide official inspection services not requiring a licensed inspector to all other areas within its geographic area.

Interested persons may obtain a map of the assigned geographic area and a list of specified service points by contacting the Agency or the Delegation and Designation Branch, Compliance Division, Federal Grain Inspection Service, United States Department of Agriculture, Washington, D.C. 20250, (202) 447-8262.

(Sec. 8, Pub. L. 94-582, 90 Stat. 2870 (7 U.S.C. 79))

Done in Washington, D.C. on August 1, 1980.

Neil E. Porter,

Acting Director, Compliance Division.

[FR Doc. 80-23731 Filed 8-5-80; 8:45 am]

BILLING CODE 3410-02-M

Assignment of Geographic Area to the Indianapolis Grain Inspection and Weighing Service, Inc., Indianapolis, Ind.

AGENCY: Federal Grain Inspection Service.

ACTION: Notice.

SUMMARY: This notice announces assignment of geographic area to the Indianapolis Grain Inspection and Weighing Service, Inc., Indianapolis, Indiana, for the performance of official grain inspection functions under the authority of the United States Grain Standards Act, as amended.

EFFECTIVE DATE: September 5, 1980.

FOR FURTHER INFORMATION CONTACT: J. T. Abshier, Director, Compliance Division, Federal Grain Inspection Service, United States Department of Agriculture, Washington, D.C. 20250, (202) 447-8262. Actions of this kind were anticipated under the provisions of Section 7 of the United States Grain Standards Act as amended (7 U.S.C. 79) and are specifically considered in the Final Impact Statement prepared for this notice. Thus, the Final Impact Statement describing the options considered in developing this notice and the impact of implementing each option is available on request from the Issuance and Coordination Staff, United States Department of Agriculture, Federal Grain Inspection Service, Washington, D.C. 20250.

SUPPLEMENTARY INFORMATION: This final action has been reviewed under USDA procedures established in Secretary's Memorandum 1955 to implement Executive Order 12044, and has been classified as "not significant."

Indianapolis Grain Inspection & Weighing Service, Inc. (the "Agency"), 727 Board of Trade Building, 143 North Meridian Street, Indianapolis, Indiana 46204, was designated as an official agency under the United States Grain Standards Act, as amended (7 U.S.C. 71 *et seq.)* (the "Act"), for the performance of official grain inspection functions on November 20, 1978. The designation also included an assignment of geographic area, on an interim basis, within which this Agency would operate. Geographic areas are assigned to each official agency pursuant to Section 7(f)(2) of the Act.

The Act provides that not more than one official agency shall be operating at one time within an assigned geographic area.

The proposed geographic area assigned on an interim basis to the Agency was announced in the January 12, 1979, issue of the Federal Register (44 FR 2649). One comment was received. Information was received from the Agency and Winchester Grain Inspection, Winchester, Indiana, regarding grain inspection services in Rush County north of State Route 244 in Indiana. After review of this matter with the agencies, it was mutually agreed that Winchester Grain Inspection was better able to provide more timely service in that specified section of this County and to delete this section of this County from the geographic area of the Agency.

After due consideration of all relevant matters and information available to the United States Department of Agriculture, the geographic area assigned to this Agency shall be the area within the following counties:

Bartholomew, Brown, Hamilton (south of State Route 32), Hancock, Hendricks, Johnson, Madison (west of State Route 13 and south of State Route 132), Marion, Monroe, Morgan, and Shelby, all in Indiana.

The above has been restated to utilize entire counties and sections of counties, instead of county lines, for clarification purposes and does not alter the geographic area as originally proposed in any way, except for the deletion of that specified section of Rush County.

A specified service point for the purpose of this notice is a city, town, or other location specified by an agency for the conduct of official inspections and where the agency or one or more of its licensed inspectors is located. In addition to the specified service points within the assigned geographic area, the Agency will provide official inspection services not requiring a licensed inspector to all other areas within its geographic area.

Interested persons may obtain a map of the assigned geographic area and a list of specified service points by contacting the Agency or the Delegation and Designation Branch, Compliance Division, Federal Grain Inspection Service, United States Department of Agriculture, Washington, D.C. 20250, (202) 447-8262.

(Sec. 8, Pub. L. 94-582, 90 Stat. 2870 (7 U.S.C. 79))

Done in Washington, D.C. on: August 1, 1980.

Neil E. Porter,

Acting Director, Compliance Division.

[FR Doc. 80-23732 Filed 8-5-80; 8:45 am]

BILLING CODE 3210-02-M

federal register

Wednesday
August 6, 1980

Part VI

Department of Agriculture

Federal Grain Inspection Service

Warehouseman's Sample-Lot Inspection Certificate; Proposed Revision

DEPARTMENT OF AGRICULTURE

Federal Grain Inspection Service

7 CFR Part 800

Proposed Revisions to the Warehouseman's Sample-Lot Inspection Certificate

AGENCY: Federal Grain Inspection Service, USDA.

ACTION: Proposed rule.

SUMMARY: The Federal Grain Inspection Service (FGIS) proposes to revise the Warehouseman's Sample-Lot Inspection Certificate by adding two qualifying statements. The addition of the qualifying statements will clarify the certificates as to the nature of the inspection service rendered and their status under the United State Grain Standards Act, as amended.

DATE: Comments must be received on or before October 6, 1980.

ADDRESS: Comments should be submitted in writing, in duplicate to: Director, Issuance and Coordination Staff, Federal Grain Inspection Service, U.S. Department of Agriculture, 1400 Independence Avenue, S.W., Room 1127-Auditors Building, Washington, D.C. 20250, telephone (202) 447-3910.

FOR FURTHER INFORMATION CONTACT: John W. Marshall, Director, Inspection Division, telephone (202) 447-8497.

The Draft Impact Analysis describing the options considered in developing this proposed rule and the impact of implementing each option is available on request from: Director, Issuance and Coordination Staff, telephone (202) 447-3910.

SUPPLEMENTARY INFORMATION: This proposed action has been reviewed under USDA procedures established in Secretary's Memorandum 1955 to implement Executive Order 12044, and has been classified "not significant."

Pursuant to the authority in section 16(a) of the United States Grain Standards Act, as amended (7 U.S.C. 87e), hereinafter cited as the Act, notice is hereby given that the Administrator of the Federal Grain Inspection Service proposes to amend § 800.161(b)(23) (7 CFR 800.161(b)(23)) of the regulations under the Act to include two statements further qualifying the Warehouseman's Sample-Lot Inspection Certificate.

Section 800.161(d)(1) of the regulations under the Act requires, in part, that FGIS use a color code on certificates to differentiate the kinds of inspection services. The color code identifies an official sample-lot inspection by use of a white certificate, a warehouseman's sample-lot inspection by use of a yellow certificate, and a submitted sample inspection by use of a pink certificate.

A report prepared by the Comptroller General of the United States, General Accounting Office (GAO), states, in part, that the certificates issued under the warehouseman's sample-lot inspection program do not adequately inform users of the source of the sample used to determine the results of the inspection. Based on this report, it was determined that certificate color alone is not sufficient to alert the grain industry of the limitations in rendering such a service. FGIS proposes to add two qualifying statements on the warehouseman's certificate to clarify its status and more clearly differentiate the warehouseman's certificate from other official inspection certificates.

If this proposed change to § 800.161(b)(23) of the regulations under the Act is adopted, the change will become effective 1 month after the final rule is published in the Federal Register. Persons issuing warehouseman's certificates will be permitted to use their current supply for a period of 6 months after the effective date.

Consideration will be given to submitted comments and to all other information available to the U.S. Department of Agriculture prior to a final determination with respect to this proposal.

All comments submitted pursuant to this proposal will be made available for public inspection at the Issuance and Coordination Staff, FGIS, during regular business hours.

It is proposed that paragraph(b)(23) of § 800.161 of the regulations under the Act be revised to read as follows:

§ 800.161 Official certificate requirements.

* * * * *

(b) * * *

(23) Warehouseman's sample-lot inspection. For a certificate for a warehouseman's sample-lot inspection service, the name of the licensed employee, the number of the contract entered into by the licensed employee, and the statements: (i) in bold print, "The results of this inspection were based on a sample obtained and submitted by an elevator employee licensed under a contract with the Service. This certificate does not meet the inspection requirements of section 5 of the Act." and (ii) in ghost or shadow type diagonally across the face of the certificate, the word "QUALIFIED."

* * * * *

(Sec. 18, Pub. L. 94-582, 90 Stat. 2884 (7 U.S.C. 87e))

Done at Washington, D.C., August 1, 1980.

D. R. Galliart,

Acting Administrator.

[FR Doc. 80-23738 Filed 8-5-80; 8:45 am]

BILLING CODE 3410-02-M

federal register

Wednesday
August 6, 1980

Part VII

Department of Agriculture

Commodity Credit Corporation

CCC Intermediate Credit Export Sales Program for Foreign Market Development Facilities

DEPARTMENT OF AGRICULTURE

Commodity Credit Corporation

7 CFR Part 1492

[GSM-301]

CCC Intermediate Credit Export Sales Program for Foreign Market Development Facilities

AGENCY: Commodity Credit Corporation, Department of Agriculture.

ACTION: Notice of proposed rulemaking.

SUMMARY: In accordance with Section 4(b) of the Food for Peace Act of 1966, as added by the Agricultural Trade Act of 1978 ("Act"); the Commodity Credit Corporation is proposing an Intermediate Credit Export Sales Program for Foreign Market Development Facilities (GSM-301) which will authorize CCC to enter into project agreements with U.S. or foreign private entities, or with foreign governments, under which CCC may finance the sale and export of U.S. agricultural commodities for periods in excess of three years but not more than ten years. The project agreement will provide that local currency generated from the import and sale of U.S. agricultural commodities in the importing country be used by the program participant in the importing country to establish facilities to improve the handling, marketing, processing, storage, or distribution of imported commodities. Pursuant to a related commodity agreement, CCC will purchase the exporter's account receivable by paying the exporter the export value of the agricultural commodity. GSM-301 is intended both to expand U.S. exports in order to create a more favorable balance of payments and to enhance farm income for United States producers by expanding future import opportunities in foreign countries for U.S. agricultural commodities.

DATE: In order to assure consideration, comments must be received by September 5, 1980.

ADDRESS: Mail or deliver comments to the General Sales Manager, Foreign Agricultural Service, Department of Agriculture, Washington, D.C. 20250.

FOR FURTHER INFORMATION CONTACT: W. R. Randoph, Agricultural Marketing Specialist, Planning and Evaluation Division, Foreign Market Development, Foreign Agricultural Service, Washington, D.C. 20250. Telephone (202) 447-6937. The Draft Impact Analysis describing the options considered in developing this proposed rule and the impact of implementing each option is available on request from W. R. Randolph.

SUPPLEMENTARY INFORMATION: This proposed action has been reviewed under USDA procedures established in Secretary's Memorandum 1955 to implement Executive Order 12044 and has been classified "significant." Kelly Harrison, General Sales Manager, Foreign Agricultural Service, has determined that an emergency situation exists which warrants less than a 60-day comment period on this proposed action because a timely adoption of the program is crucial to ensure implementation of the program during Fiscal Year 1980. In Fiscal year 1980, $50 million is available in the CCC program budget to fund the proposed program. Potential projects have been identified and proposed to the General Sales Manager which could be started before the end of the fiscal year to effectively utilize the available funds. Because of the time necessary to complete the process of implementing the proposed program and approve the projects before the end of the fiscal year, a comment period of less than the 60-days is necessary. The purpose of extending financing under GSM-301 is to develop or expand the importing country as a foreign market, on a long-term basis, for the commercial sale and export of U.S. agricultural commodities without displacing normal U.S. commercial sales, or to otherwise improve the capability of the importing country to purchase and use, on a long-term basis, U.S. agricultural commodities.

The decision to utilize this GSM-301 program was arrived at after thorough consideration of the following three alternatives: First, no action be taken to implement the intermediate credit program for the establishment of foreign market development facilities authorized in the Act; second, reinstate the former Private Trade Entity Program (PTE) authorized by Title I of the Agricultural Trade Development and Assistance Act of 1954, as amended; and third, develop and implement an intermediate credit program to finance sales of agricultural commodities on credit terms of more than three years but not more than ten years for the establishment of facilities to improve marketing, processing, storage, or distribution of imported agricultural commodities in the importing country as authorized by the Act.

The first alternative considered by CCC contemplates reliance on private financing and other credit facilities now available to establish market development facilities in foreign importing countries. These include facilities and programs administered by agencies or institutions such as the Export-Import Bank, the Overseas Private Investment Corporation, the World Bank, and private financing institutions. The countries which this proposed rule will benefit are not presently eligible for U.S. Agency for International Development or Pub. L. 480 Programs and may not be eligible to receive loan capital for market development projects from other financial institutions. In many instances, private financing is not available from traditional domestic or foreign sources to fund such projects.

The World Bank and other lending institutions have increased their funding of commodity and marketing projects but the total volume of resources made available for such activities remains low relative to expected needs. This situation appears to be attributed to two factors: (1) higher priority given to projects to encourage domestic production and export development of the host country and (2) lending procedures of international institutions which limit the number of approvable projects. It appears to CCC that the aforementioned priorities and lending procedures preclude the World Bank and other lending institutions from funding suitable market development projects which would increase the importation of agricultural commodities and expansion of commercial markets in the importing country. The conclusion, therefore, is that funding for the kinds of projects contemplated in the Agricultural Trade Act of 1978 is not readily available from international lending institutions.

Furthermore, the loan criteria of some of these lending institutions would exclude many market development projects which could be undertaken to improve market opportunities for U.S. agricultural exports. For example, the Export-Import Bank of the United States provides financing of U.S. exports of capital goods and services and is limited to the financing of local costs of projects. Also, the U.S. goods shipped by ocean freight must be transported by U.S. flag vessels unless a waiver is obtained from the U.S. Maritime Administration. This requirement would increase the cost of construction materials and equipment to construct facilities. To qualify for OPIC financing, the projects must have U.S. investors owning a meaningful share of the investment. Generally this is considered to be at least 25 percent of the voting shares. Even in such cases, only 40-45 percent of the total project cost is eligible for financing. In addition, wholly government-owned projects are not eligible for OPIC financing. The first

alternative, therefore, is not acceptable to CCC.

The second alternative considered by CCC was to reinstitute the former Private Trade Entity Program (PTE) pursuant to Title I of the Agricultural Trade Development and Assistance Act of 1954, as amended. The PTE program in effect during the 1964–72 period authorized the Secretary of Agriculture to enter into agreements with foreign or U.S. private trade entities to finance export sales of U.S. agricultural commodities, thereby assisting economic and market development in developing countries. Foreign governments were not eligible to participate under the PTE Program. Agreements provided for the development of projects which resulted in the establishment of facilities designed to improve the storage or marketing of agricultural commodities or which otherwise stimulated and expanded private enterprise in friendly developing countries.

If the PTE program was revived and operated in the same manner as before, program regulations would need to be re-issued. There is a legislative requirement that the private trade entity would be eligible for financing only if a country's usual marketing requirements were adhered to. This requirement proved difficult to administer during the time the program was in effect and, because of this requirement, many proposals could not be approved since the private trade entity could not give CCC assurance that the importing country would comply with the usual marketing requirements. There is another legislative requirement that the commodity to be financed must be in "surplus" at the time of export. Finally, it is assumed that the proposed PTE projects would be subject to extensive interdepartmental review as they were in the past. In conclusion, CCC feels that the restrictive legislative requirements resulted in a program which was difficult to administer, burdened both by excessive delays in the approval of projects because of interdepartmental reviews and reluctance on the part of private trade entities to participate because of the imposition of usual marketing requirements over which they had no control, and the uncertainty that commodities programmed in the project agreements would be in "surplus" at the time export of the commodity was planned to occur. Accordingly, CCC has rejected the second alternative.

The third alternative considered by CCC and published herein as a proposed rule is to develop an intermediate credit program to finance sales of U.S. agricultural commodities on credit terms of more than three years but not more than ten years for the establishment of facilities to improve marketing, processing, storage, or distribution of imported agricultural commodities. Essentially, the facilities would be established through the use of local currency generated from the import and sale of the U.S. agricultural commodities in the importing country.

The ability of many countries in the world to import U.S. food and other farm commodities, particularly developing countries, is limited by the lack of adequate marketing facilities in such countries. In a recent USDA survey, 23 countries specified needed projects which they would undertake themselves, or undertake in a joint venture with private U.S. agribusiness firms, if acceptable financing terms were available. Projects of interest to such countries include the construction of adequate port facilities, bulk grain unloading, handling and distribution facilities, feed and flour mills, slaughter and freezer plants, cold storage units, soybean processing plants, vegetable oil refineries, livestock and poultry processing facilities, plus expansion and modernization of existing facilities.

Under the proposed program, and as required by the Act, no export sales may be financed unless the sale develops or expands, on a long-term basis, the importing country as a foreign market for the commercial sale of U.S. agricultural commodities without displacing normal U.S. commercial sales, or otherwise improves the capability of the importing country to purchase and use U.S. agricultural commodities on a long-term basis. Moreover, intermediate credit financing may not be used to encourage credit competition, or for the purpose of foreign aid or debt rescheduling. Foreign governments, as well as private trade, would be eligible to participate under the program.

Commodities financed under the proposed program would be those which are determined to be in sufficient supply. Engineering and marketing feasibility studies would be required for each proposed market development project except when such studies are determined to be unnecessary. Periodic compliance reviews would determine whether the project is being carried out in accordance with the project plans. The participant would be required to maintain an adequate system of bookkeeping records to account for the receipt and use of the local currency received from the import and sale of the commodity. The participant will furnish CCC periodic reports on the use of the local currency and reports on the progress made toward completion of the project.

Under the proposed program, the prticipant would not be required to purchase U.S. capital goods and services to carry out the project and no limitation would apply to the amount of local costs which could be paid for with funds made available through the import and sale of the U.S. agricultural commodity. Furthermore, no requirement would be made of the participant to make future purchases of U.S. agricultural commodities. The U.S. would compete with other exporting countries for the opportunity to export to the foreign country in which the facility was established.

The applicant for a project agreement would be required to establish adequate financial assurance in favor of CCC to protect CCC from failure to repay the financing as well as failure to complete the planned project or to perform other obligations under the agreement. Proposed project agreements would be subject to review only by the National Advisory Council on International Monetary and Financial Policies.

The public is invited to submit written comments regarding the proposed rule. Each person submitting comments regarding the proposed rule shall include his or her name and address and give reasons for any suggested changes in the proposed rule. Copies of all written communications received and an approved Draft Impact Analysis will be available for examination by interested persons in Room 4079, South Agriculture Building, 14th Street and Independence Avenue, S.W., Washington, D.C. 20250, during regular business hours.

Proposed Rule

Accordingly, it is proposed to amend Subchapter C of Chapter XIV of Title 7 of the Code of Federal Regulations by adding a new part 1492, CCC Intermediate Credit Export Sales Program for Foreign Market Development Facilities (GSM-301) and a new subpart A thereunder as follows:

PART 1492—CCC INTERMEDIATE CREDIT EXPORT SALES PROGRAM FOR FOREIGN MARKET DEVELOPMENT FACILITIES

Subpart A—Financing Export Sales of Agricultural Commodities Under CCC Intermediate Credit Export Sales Program (GSM-301)

General

Sec.

1492.1 General statement.

Sec.
1492.2 Definitions of terms.

Project Agreements

1492.3 General.
1492.4 Eligible projects and participants.
1492.5 Submission of application for a project agreement.
1492.6 Project plan and information.
1492.7 Legal opinions and documents.
1492.8 Subsequent legal opinions and documents.
1492.9 Investment by the participant.
1492.10 Assurance of payment to CCC.
1492.11 Credit terms and other financing provisions.
1492.12 Eligible importing countries.
1492.13 Commodity purchase authorizations.
1492.14 Export periods.
1492.15 Export value of the commodity to be financed.
1492.16 Determination of project funds.
1492.17 Deposit of project funds.
1492.18 Use of project funds.
1492.19 Signing of project agreements.
1492.20 Customs entry.
1492.21 Books, records, reports, and compliance policies.
1492.22 Warranties by the participant.
1492.23 Events of default.
1492.24 Remedies of CCC in the event of default.

Commodity Agreements

1492.25 General.
1492.26 Submission of application for a commodity agreement.
1492.27 Commodity agreements.
1492.28 Amendments to commodity agreements.
1492.29 Export periods.
1492.30 Partial payment by the participant.
1492.31 Documents required after export.
1492.32 Assignments.
1492.33 Covenant against contingent fees.
1492.34 Exporter's records and accounts.

Miscellaneous Provisions

1492.35 Use of representatives.
1492.36 Successors to rights of CCC.
1492.37 Applicable law.
1492.38 Notice.
1492.39 Officials not to benefit.
1492.40 Purchasing agents.
1492.41 Waiver.
1492.42 English language.
1492.43 Communications.

Authority: Sec. 4(b), 80 Stat. 1537, as added by Sec. 101, 92 Stat. 1685 (7 U.S.C. 1707a); Sec. 5(f), 62 Stat. 1070, as amended.

General

§ 1492.1 General statement.

(a) Section 4(b) of the Food for Peace Act of 1966, as added by the Agricultural Trade Act of 1978, authorizes the Commodity Credit Corporation (CCC) to finance export sales of United States agricultural commodities out of CCC and private stocks on credit terms in excess of three years but not more than ten years.

(b) Intermediate credit financing made available by CCC on the export sale of United States agricultural commodities may be used to establish facilities in the importing country to improve handling, marketing, processing, storage, or distribution of imported agricultural commodities through the use of local currency generated from the import and sale of the U.S. agricultural commodities to finance the development of such facilities.

(c) No export sale may be financed unless the General Sales Manager determines that the sale will: (1) develop or expand the importing nation as a foreign market, on a long-term basis, for the commercial sale and export of U.S. agricultural commodities without displacing normal U.S. commercial sales; or (2) otherwise improve the capability of the importing country to purchase and use, on a long-term basis, U.S. agricultural commodities.

(d) Intermediate credit financing may not be used for projects for which financing is available under other U.S. programs, such as programs administered by the Overseas Private Investment Corporation and the Export-Import Bank. However, financing provided by such institutions may be supplemented to the extent the General Sales Manager determines that such supplementation is necessary to accomplish the objectives of this program.

(e) Intermediate credit financing may not be used to encourage credit competition or for the purpose of foreign aid or debt rescheduling.

(f) The terms of credit for export sales financed shall include the following conditions:

(1) Repayment of financing shall be made in U.S. dollars and shall bear interest for the period of the financing. The interest rate shall be specified in the project agreement and shall apply to export sales made during a designated period of time. Interest rates will be determined by CCC using generally the same criteria as used in determining interest rates charged under CCC's short-term Export Credit Sales Program.

(2) The participant shall be required to make an initial payment of at least 15 percent of the export value of the agricultural commodity at the time of export of the commodity.

(3) When deemed appropriate to protect the interests of CCC, the participant shall also be required to make a further investment in the project. Such investment may include initial working capital, the payment of feasibility and engineering studies, organizational expenses, land cost, construction cost, machinery and equipment cost, etc., with the participant's own resources.

(g) CCC shall, when deemed appropriate, obtain commitments from participants that the products produced in facilities covered by the project agreement will not be exported from the importing country if such products compete with the same or similar product being exported from the United States.

(h) Subject to the terms and conditions as set forth in GSM-301, CCC will purchase, after export of the commodity, the exporter's account receivable arising from an export sale of U.S. agricultural commodities.

(i) The provisions of Pub. L. 83-664 (Cargo Preference Act) shall not apply to exports of U.S. agricultural commodities financed under GSM-301.

(j) Participation under GSM-301 will not be conditioned upon the participant's use of U.S. goods and services to establish the facilities except that only U.S. agricultural commodities will be financed under the program.

(k) The GSM-301 program will be administered by the General Sales Manager, Foreign Agricultural Service, U.S. Department of Agriculture.

§ 1492.2 Definition of terms.

As used in this GSM-301, the project agreement, USDA announcements, and the forms and documents related thereto, the following terms shall have the meanings assigned to them in this section:

(a) "Account receivable" means the contractual obligation of the participant to the exporter for the export value of the U.S. agricultural commodity exported by the exporter to the participant. The account receivable establishing the contractual obligation between the exporter and the participant shall be evidenced by documents in form and substance satisfactory to CCC.

(b) "General Sales Manager" means the General Sales Manager, Foreign Agricultural Service, USDA, or the General Sales Manager's designee.

(c) "Assurer" means the institution which assures, on behalf of the participant, repayment in U.S. dollars of the amount financed by CCC with interest in accordance with provisions of the project agreement between CCC and the participant. An "assurer" may be a U.S. bank or financial institution; a foreign private bank or financial institution; or a central bank, government financial agency, or a foreign government.

(d) "Carrying charges" means storage, insurance, and interest charges involved in the cost of handling and storing the agricultural commodity before export and such other incidental costs as may

be approved by the General Sales Manager.

(e) "CCC" means the Commodity Credit Corporation, U.S. Department of Agriculture.

(f) "Commodity agreement" means the written agreement entered into between CCC and an exporter under which the exporter agrees to export an eligible U.S. agricultural commodity in accordance with the exporter's export sales contract with the participant and the provisions of GSM-301 in consideration of CCC's agreement to purchase the exporter's account receivable after export of the commodity and upon submission of the required documents specified in § 1492.29.

(g) "Commodity purchase authorization" means a USDA announcement published by the U.S. Department of Agriculture pursuant to GSM-301 in which the General Sales Manager authorizes the participant to purchase commodities from exporters in accordance with the commodity purchase authorization and project agreement.

(h) "Date of export" means the onboard date of an ocean bill of lading, or the date of an airway bill, or if export is by rail or truck, the date of entry shown on an authenticated landing certificate or similar document issued by an official of the government of the importing country.

(i) "Date of sale" means the earliest date the exporter has knowledge that a contractual obligation exists with the participant under which a firm dollar-and-cent price has been established or a mechanism to establish the price has been agreed upon.

(j) "Eligible commodity" means any agricultural commodity or product thereof, including eligible cotton, produced in the United States and designated by the General Sales Manager as eligible for financing under GSM-301. Commodities which have been purchased from CCC are also eligible for export under GSM-301. Commodities exported pursuant to any CCC barter contract, Public Law 480 agreement, Agency for International Development agreement, direct loan by the Export-Import Bank, or any other concessional-type transactions are not eligible for financing under GSM-301.

(k) "Eligible cotton" means upland and extra-long staple cotton grown in the United States that is eligible for financing hereunder but excludes reginned or repacked cotton, as defined in regulations of the U.S. Department of Agriculture under the U.S. Cotton Standards Act (7 CFR 28.40), by-products of cotton such as cotton mill waste, motes, and linters, and any cotton that contains any by-products of cotton. CCC's determination as to the eligibility of cotton shall be final.

(l) "Eligible exporter" or "exporter" means a person who is (1) engaged in the business of buying or selling commodities for export and for this purpose maintains a bona fide business office in the United States, its territories or possessions, and has someone on whom service of judicial process may be had within the United States, (2) financially responsible, and (3) not suspended or debarred from contracting or participating in any program administered by CCC on the date of issuance of the commodity agreement.

(m) "Eligible importing country" means the country (i) which is named in the porject agreement between CCC and the participant and in the commodity agreement between CCC and the exporter, and (ii) which meets the licensing requirements of the U.S. Department of Commerce.

(n) "Export" means the export of the agricultural commodity as required by the export sale contract between the participant and exporter to transfer to the participant full or conditional title to the commodity. Export from the United States shall be f.a.s. or f.o.b. export carrier at U.S. ports, airports, and border points of exit or, if transshipped through Canada, at ports on the Great Lakes and the St. Lawrence River.

(o) "Export value" means the net amount of the exporter's sale price for the commodity delivered to the participant under a commodity agreement, basis f.a.s. or f.o.b. export carrier at U.S. ports, airports or border points of exit, or, if transshipped through Canada, at ports on the Great Lakes or on th St. Lawrence River. The export value shall not include ocean freight for a c & f sale, or ocean freight and marine and war risk insurance for a c.i.f. sale, but may include carrying charges as provided for in the export sales contract. The net amount of the exporter's sales price means the exporter's contract price for the commodity, on the basis stated above, less any payments made to the exporter and less any discounts, credits, or allowances by the exporter.

(p) "Financing period" means the number of years and months over which payment is to be made which shall be in excess of three years but not more than ten years. Such period shall start on the date of export of the commodity and shall expire on the expiration of the financial assurance established by the participant or the specified period over which repayments are to be made, whichever occurs first.

(q) "GSM-301" menas the regulations contained in this Subpart A and USDA announcements thereto, setting forth the terms and conditions governing the CCC Intermediate Credit Export Sales Program for Foreign Market Development Facilities.

(r) "Project agreement" means the written agreement entered into between CCC and a participant for the financing of U.S. agricultural commodities on credit pursuant to the purpose described in § 1492.1 (b).

(s) "Participant" means a foreign government, a U.S. or foreign individual, group of individuals, partnership, corporation, association, cooperative or other entity which (1) enters into a project agreement with CCC, (2) purchase U.S. agricultural commodities from an exporter to be exported from the U.S. to the importing country named in the commodity agreement, and (3) executes the documents evidencing the account receivable which is assigned to CCC.

(t) "Supply year" or "fiscal year" means the twelve-month period beginning October 1 and ending the following September 30.

(u) "United States" means the 50 States, the District of Columbia, and Puerto Rico.

Project Agreements

§ 1492.3 General.

To qualify for a project agreement, an applicant must submit: (a) an application for a project agreement; (b) a project plan and cost information; (c) a feasibility study and engineering report except when the General Sales Manager determines that such a study or report is not necessary; (d) certain legal documents; and (e) an assurance of payment. After a project agreement is signed by the General Sales Manager and the participant, the General Sales Manager will issue an authorization for the participant to purchase U.S. agricultural commodities. The commodities are then purchased and imported into the eligible country and sold by the participant, or the commodity may be processed into products and the products sold, and the proceeds from the sale of the commodity or product deposited in a financial institution. The funds are then available to the participant to carry out the construction of the market development project approved in the agreement. The participant will be required to make reports on the use of project funds and progress toward completion of the project. Activities under a project agreement will be reviewed by CCC to determine compliance with the project agreement.

§ 1492.4 Eligible projects and participants.

(a) Local currency generated from the import and sale of the commodity, or product thereof, shall be used by the participant for the establishment of facilities in the importing country to improve handling, marketing, processing, storage, or distribution of imported agricultural commodities which will improve market opportunities for the export sale of U.S. agricultural commodities.

(b) Projects which may be approved include, but are not limited to, feed and flour mills; bulk unloading, handling and storage facilities at ports and inland points; oilseed crushing and vegetable oil refining facilities; livestock receiving facilities; livestock feeding lots; processing plants; model bakeries; poultry facilities; and tallow refining facilities.

(c) The General Sales Manager may enter into project agreements with foreign governments, U.S. or foreign individuals, group of individuals, partnerships, corporations, associations, cooperatives, and other entities.

(d) If the project agreement is entered into with a foreign government, the foreign government may carry out the establishment of facilities directly or the foreign government may, if approved in the project agreement, enter into an agreement with a private business entity under which the private business entity would carry out the establishment of the facility. The private business entity and the plan of the private business entity to carry out the establishment of the facility must be approved by the General Sales Manager.

(e) If a non-government entity is to be the participant, it must furnish the General Sales Manager with a written statement from the foreign government of the country in which the project is to be carried out showing the foreign government's approval of the proposed project.

(f) The General Sales Manager will request the Agricultural Counselor or Attache assigned to the country in which the project is to be carried out and other interested U.S. agencies to furnish their recommendations concerning the proposed project.

§ 1492.5 Submission of application for a project agreement.

(a) An applicant for a project agreement shall submit a written application to the General Sales Manager. The application shall include, but is not limited to the following:

(1) Name of the applicant and address, type or organization (company, corporation, cooperative, government or other entity), nature of its business and operations and, if a corporation, a copy of its articles of incorporation and by-laws.

(2) Name and address of any firm or individual with which the applicant has a business affiliation, i.e. ownership interest.

(3) A summary of the applicant's experience in dealing with agricultural commodities.

(4) If the applicant is a private organization and the Government of the importing country is to participate in the project, the nature and extent of Government participation in the ownership, financing, or operation of the project. If the Government of the importing country will not be participating in the project, the extent to which the applicant has discussed the proposal with officials of the Government.

(5) Information on each of the applicant's principal officers and managerial personnel as follows: (i) full name, (ii) position, (iii) place and date of birth (day, month, and year), (iv) present citizenship, (v) business and private addresses, and (vi) summary of business experience.

(6) The name of the importing country.

(7) The kind and quantity of agricultural commodity proposed for financing.

(8) The period of time during which the commodities would be exported.

(9) A statement of the applicant's plans for selling the commodity to end users within the importing country or, if the applicant is the intended processor or user, the applicant's plans for processing or using the commodity.

(10) The repayment period considered necessary by the applicant to carry out the project.

(11) Name and address of the financial institution which shall provide the required assurance of U.S. dollar payment to CCC as provided in § 1492.10.

(12) The most recent statment of financial position and profit and loss statement of the applicant.

(13) Projected cash-flow statements covering the repayment period.

(14) The extent to which the applicant has discussed the proposal with the U.S. Agricultural Counselor or Attache or with representatives of the American Embassy and other U.S. agencies.

(15) Brief statement explaining any requests made by the applicant to other U.S. lending organizations, such as the Overseas Private Investment Corporations or the Export-Import Bank of the U.S., to obtain financing for the proposed project and the results of such requests.

(16) Project plans and information as provided in § 1492.6.

(17) Other information or documents as may be requested by the General Sales Manager.

(b) An application may be approved as submitted, approved with modification, or rejected by the General Sales Manager.

§ 1492.6 Project plan and information.

(a) The applicant shall furnish the following information to the General Sales Manager:

(1) *Project plans.* A complete description of the project; plan for carrying out the project; time schedule for carrying out the project, including the approximate starting and completion dates; purpose and need of the project in the importing country; expected effect the project will have on future imports of agricultural commodities into the importing country; and any other information which would demonstrate the soundness of the project plan.

(2) *Project cost estimates.* An estimate of the total cost to carry out the project with a breakdown of the total costs among major categories involved in the project, such as technical services (architectural and engineering), land, construction services, materials, machinery and equipment, financing costs, administrative and overhead costs. An allocation of each such category of costs to project funds and to resources to be provided by the participant. Unless otherwise agreed to in writing by the General Sales Manager, financing cost (other than interest to be paid by the participant for the financing provided by CCC under the project agreeement) and related guarantee fees and administrative and overhead charges incurred by the participant cannot be allocated to project funds.

(3) *Project fund estimate.* An estimate of the project funds needed to carry out the project and a certification by the participant which provides substantially as follows: "I certify that the project cost estimates allocated to be paid with project funds represents a reasonable estimate of the financing needed to carry out the project."

(4) *Participant resources.* An estimate of the value of resources (working capital, land, buildings, machinery and equipment, etc.) to be provided by the participant. Include as a resource, that portion of the estimated export value of the commodity to be exported from the U.S. which the applicant will pay with the applicant's own resources. If the applicant is required by the General Sales Manager to make a further investment in the project, a detailed

description of the nature and the value of the resource which will represent such investment. When requested by the General Sales Manager, the applicant must furnish a detailed independent appraisal of the value of the resources.

(5) *Tentative schedule of disbursements.* A tentative time schedule for project fund disbursements which shows the estimated disbursement for each major cost category for each semi-annual period of the financing period.

(b) The applicant must furnish a feasibility study to demonstrate the soundness of the proposed project except when the General Sales Manager determines that such a study is not necessary.

(c) (1) The applicant shall employ the services of a competent engineering firm for the planning and development of the project and for supervision of the execution of the project except when the General Sales Manager determines that such services are not necessary.

(2) If the services of an engineering firm are required, the applicant's arrangement with the engineering firm shall provide that the engineering firm furnish a certification with respect to the project plans and cost estimates as follows: "We hereby certify that we have reviewed the accompanying information on the project plans which we understand (name of applicant) is required to submit to the Commodity Credit Corporation. We further certify that this information is in accordance with the project plans and the specifications prepared by us, or with our advice and consultation, and that the cost estimates are reasonable and proper." The certification shall show the name and address of the engineering firm and shall be signed by an authorized representative of the firm.

(d) The General Sales Manager shall have the right to request the applicant to furnish copies of the detailed architectural and engineering plans and specifications and detailed cost estimates.

(e) The applicant shall furnish such other information, certifications, or documents as requested by the General Sales Manager.

(f) After the project plans have been approved by the General Sales Manager, the project and the plan for carrying out the project may be modified only by mutual agreement of the General Sales Manager and the participant in writing.

§ 1492.7 Legal opinions and documents.

Unless otherwise agreed to by the General Sales Manager in writing, the applicant shall furnish to the General Sales Manager in form and substance satisfactory to the General Sales Manager, the following.

(a) An opinion prepared by the applicant's counsel showing that under the laws of the importing country:

(1) The applicant has the power and authority to enter into the project agreement and perform its obligations under the project agreement;

(2) The project agreement, as signed by the participant, or on behalf of the participant, is valid and legally binding upon the participant;

(3) Repayments of principal and interest due CCC will be made in U.S. dollars;

(4) The project agreement may be enforced by legal proceedings against the participant upon failure of the participant to meet its obligations under the project agreement;

(5) Judgments rendered in favor of CCC may be collected in U.S. dollars.

(6) Such other legal opinions including, but not limited to, an opinion with respect to the validity of the assurance of payment, certifications and documents furnished to CCC.

The opinions shall refer to all pertinent documents, decrees, laws, regulations, and legal precedents which serve as a basis for the conclusions stated therein, and shall set forth the procedures which CCC would have to follow in any legal proceedings against the participant and in collecting judgments awarded to CCC pursuant to such proceedings.

(b) A designation by name and title of the person or persons authorized to represent the participant in accordance with § 1492.35 and the authenticated specimen signature of each person.

(c) A foreign exchange authorization showing the signature, title, and organization of the issuing official of the foreign government which authorizes U.S. dollar funds for the repayment of principal and interest in accordance with the project agreement and a certificate of authentication of the authorization executed by an officer of the American Embassy in the importing country.

(d) An assurance of payment acceptable to CCC covering the principal and interest.

(e) Evidence satisfactory to the General Sales Manager that the participant has made arrangements for the services of an engineering firm acceptable to the General Sales Manager, except when the General Sales Manager determines that the services of an engineering firm are not necessary.

(f) The name and address of the financial institution in which project funds are to be deposited.

§ 1492.8 Subsequent legal opinions and documents.

Subsequent to the issuance of the first purchase authorization but prior to the issuance of each additional purchase authorization or any amendment which increases the maximum amount of a purchase authorization, the participant shall, when requested by the General Sales Manager, furnish:

(a) Additional assurance of payment if, as determined by the General Sales Manager, existing assurances are not sufficient.

(b) Additional foreign exchange authorization and related documents specified in § 1492.7(c), if, as determined by the General Sales Manager, existing authorizations and related documents are not sufficient.

(c) Such other additional legal opinions and documents as may be requested by the General Sales Manager.

§ 1492.9 Investment by the participant.

(a) The participant is required to make an initial payment at the time of export of the commodity of at least 15 percent of the export value of the commodity. The percentage amount and manner of making such payment will be specified in the project agreement and in the commodity purchase authorization issued by the General Sales Manager pursuant to § 1492.13.

(b) When deemed appropriate by the General Sales Manager to protect the interests of CCC, the participant shall also be required to further invest in the project. Such investment may include initial working capital, administrative and overhead cost, the cost of feasibility and engineering studies, organizational expenses, land, construction, machinery and equipment, etc. When requested by the General Sales Manager, the participant must furnish a detailed independent appraisal of the value of the investment to be made by the participant.

§ 1492.10 Assurance of payment to CCC.

(a) Repayment of amounts due CCC for commodities financed under a project agreement must be secured by an assurance of payment issued by an assurer acceptable to CCC. The assurance of payment must provide adequate protection to CCC from failure of the participant to make scheduled repayments, from failure of the participant to complete the planned project, or to perform other obligations under the project agreement. An application for a project agreement will not be approved if the proposed assurer is not acceptable to the General Sales Manager because of its ability to

provide reasonable and adequate assurance of full repayment to CCC.

(b) The assurance of payment shall be in the form of a letter of credit or other assurance of payment acceptable to the General Sales Manager.

(c) The assurance of payment shall obligate the assurer to pay CCC on demand in U.S. dollars the amount of the outstanding balance of the principal in default plus interest in the event of non-compliance with the project agreement.

(d) An acceptable assurance of payment covering the estimated export value of the commodity to be purchased and financed by CCC must be received by the General Sales Manager prior to the issuance of a commodity purchase authorization.

§ 1492.11 Credit terms and other financing provisions.

(a) The financing of commodities to the participant shall be through the purchase by CCC of an exporter's account receivable arising from an export sale after the commodity has been exported.

(b) Repayment shall be made to CCC by the participant in approximately equal semi-annual amounts with the first repayment being due on the date specified in the project agreement with subsequent repayments to be made semi-annually thereafter. Any semi-annual repayment, or repayment of the total amount of principal outstanding, may be made at any time prior to the due date thereof.

(c) The financing period approved for a particular project agreement will be based on factors such as the type of project, planning and completion time of the project and the project's ability to generate funds to liquidate the financing extended. The financing period determined appropriate shall be stated in the project agreement.

(d) At the end of each calendar year, CCC will furnish to the participant a repayment schedule of the principal applicable to commodities exported in the prior twelve month period. The principal shall consist of the U.S. dollar amount disbursed for the account of the participant by CCC for the commodities exported in each calendar year less any adjustments. The principal with interest thereon shall be repaid to CCC semi-annually in accordance with the terms of the project agreement.

(e) The project agreement shall stipulate the interest rate to be paid to CCC. The interest rate shall be fixed at the time the project agreement is signed by the General Sales Manager and the participant and shall apply to export sales made during a designated period of time. After the expiration of such period, CCC shall determine the interest rate which will apply to subsequent export sales. The project agreement will be amended to reflect such rate and the period of time the rate will be in effect for export sales.

(f) Interest on the unpaid balance of the principal shall begin on the date of export of the commodity. Accrued interest shall be paid in U.S. dollars on the date on which payment of principal is scheduled to be paid. Interest shall accrue on any installments determined by CCC to be in arrears.

(g) Repayments made by the participant shall be applied first to accrued interest due and then to principal. Principal and interest shall be paid without deduction for any taxation, including fees and impositions, now or at any time hereafter imposed under the laws of the importing country or any other country.

(h) All obligations of the participant to make repayments to CCC under the project agreement shall be stated in U.S. dollars and shall be discharged by payments in U.S. dollars.

(i) CCC shall have the right to sell or otherwise dispose of the amounts due CCC from the participant. CCC will give notice to the participant prior to any such sale or other disposition.

(j) The participant shall have the right to make prepayments of accrued interest and scheduled principal installments, in part or in full, without penalty.

(k) Information as to financing terms and interest rates may be obtained from the General Sales Manager.

§ 1492.12 Eligible importing countries.

Commodities financed under GSM-301 must be imported into the country in which the local currency generated from the sale of such commodities is to be utilized for the establishment of market development facilities.

§ 1492.13 Commodity purchase authorizations.

(a) After a project agreement is signed, the participant may request the General Sales Manager to issue commodity purchase authorizations for the commodity to be purchased under the terms of the project agreement.

(b) Commodity purchase authorizations will specify: the purchase authorization number; the kind of commodity to be purchased; contracting period; the period during which the commodity must be exported; the approximate quantity and maximum U.S. dollar value of the commodity to be purchased; the importing country; the name of the participant or its agent, to whom bids must be submitted by the exporter; the percentage amount of the U.S. dollar value of the commodity exported which will be financed by CCC; the percentage amount of the U.S. dollar value of the commodity exported which will be paid for by the participant with the participant's own resources; and other information deemed necessary by the General Sales Manager.

§ 1492.14 Export periods.

The commodity to be financed shall be exported during the export period specified in the project agreement and purchase authorization unless the General Sales Manager agrees in writing to an extension of such export period. If a project agreement provides for the purchase of commodities during more than one supply year, the issuance of purchase authorizations for each supply year shall be subject to the General Sales Manager's determinations as to: availability of funds; the availability of the kind of commodity specified in the project agreement; and evidence that satisfactory progress has been made by the participant in carrying out the project.

§ 1492.15 Export value of the commodity to be financed.

CCC will finance only that portion of the export value of the commodity exported by the exporter to the participant pursuant to the provisions of the export sale and the purchase authorization for which the exporter has complied with the applicable provisions of GSM-301.

§ 1492.16 Determination of project funds.

Project funds shall consist of the local currency proceeds received by the participant from the sale of the imported commodity or the sale of products produced from the imported commodity which shall, unless otherwise agreed in writing by the General Sales Manager and the participant, be determined as follows:

(a) *Imported commodities sold without processing.* When the commodity imported by the participant is sold without processing, the amount of the project funds shall be the total sale proceeds which the participant receives from such sales; *Provided,* that, in determining the amount of the project funds, the participant may deduct from the total sale proceeds, the local currency equivalent of the following costs if paid by or for the account of the participant and if such costs are included in fixing the sales price of the

imported commodity: (1) ocean freight and marine insurance; (2) fees and other related charges of banks for commercial letters of credit used to effect payment to exporters of the commodity and suppliers of related ocean freight and marine insurance; and (3) such other costs incident to the procurement, importation, handling, and sale of the commodity as may be approved by the General Sales Manager in writing; *Provided Further*, that, the participant shall not deduct from the total proceeds any local currency to offset the amount of the initial payment made by the participant with the participant's own funds.

(b) *Imported commodities processed before being sold.* When the imported commodities are used in the production of a processed commodity (hereinafter called "the product"), the amount of project funds shall be computed by (1) determining the percentage of the value of the imported commodity used in the processing of the product to the total cost of the product and (2) multiplying such percentage by the total sale proceeds received, or to be received, from the sale of the product; *Provided*, that, in determining the value of the imported commodity to be included in the cost of the product, the participant may, if paid by or for the account of the participant, deduct the local currency equivalent of the following costs: (i) ocean freight and marine insurance; (ii) fees and other related charges of banks for commercial letters of credit used to effect payment to exporters of the imported commodity and suppliers of related ocean freight and marine insurance; and (iii) other such costs incident to the procurement, importation, and handling of the commodity and sale of the product as may be approved by the General Sales Manager in writing; *Provided Further*, that, the participant shall not deduct from the total sale proceeds any local currency to offset the amount of the initial payment made by the participant with the participant's own resources. For example: The participant is a flour miller who imports wheat for production of flour. Proceeds from the sale of the flour milled from wheat imported under a project agreement are to be used to expand the milling capacity and for modernization of the existing facility. Proceeds from the sale of the flour which would be considered as project funds would be calculated in the following manner:

	Metric ton
Value of the imported wheat at mill location[1]	$250.00
Processing costs	$50.00
Total cost of producing flour	$300.00
Value of imported wheat to total cost of flour (percentage)	83.3%
Revenue received from the sale of flour	$325.00
Project funds ($325 × 83.3%)	$270.73

[1] After deduction of allowable expenses.

The participant's method of recording sales and production costs, including the value of the imported commodity and allocation of the participant's processing costs to the product produced from the imported commodity and the computation of project funds must be approved by the General Sales Manager in writing.

(c) *Sale proceeds which are less than export value.* If the net sale proceeds determined under this section are less than the U.S. dollar equivalent of the export value of the commodity, the participant shall be required to establish additional equity in the project with the participant's own resources equivalent in value to the difference between the U.S. dollar equivalent of the net sale proceeds and the export value of the commodity. The method of establishing the additional equity must be approved by the General Sales Manager in writing.

(d) *Sale proceeds which are more than export value.* If the net sale proceeds determined under this section are more than the U.S. dollar equivalent of the export value of the commodity, the entire amount of the net sale proceeds shall be used by the participant for carrying out the approved project.

(e) *Other proceeds which are considered project funds.* Where reference is made in this section to the amount which the participant receives on the sale of the imported commodity or the product processed from imported commodity, it means all considerations of any kind, including commissions and interest, which the participant is entitled to receive on such sale.

(f) *Disallowance of deductions.* The General Sales Manager shall be entitled to disallow any of the deductions or exclusions claimed by the participant and to require the participant to use the total amount of such disallowances for approved project purposes.

(g) *Market value of commodity.* Notwithstanding any other provision of GSM-301 or the project agreement, the General Sales Manager may consider the prevailing market value of the commodity in the importing country, less allowable deductions as determined by the General Sales Manager, as the amount of the project funds for the imported commodity.

§ 1492.17 Deposit of project funds.

The participant shall deposit the local currency proceeds from the sale of the commodity or the products thereof in a financial institution acceptable to the General Sales Manager immediately following the receipt of such process. Interest earned on such deposits shall be retained in the account.

§ 1492.18 Use of project funds.

Local currencies accruing from the sale of the commodity, or the products thereof, including interest earned on such local currencies, shall only be used for carrying out the approved project.

§ 1492.19 Signing of project agreements.

The project agreement shall be signed by the participant. The General Sales Manager shall sign the project agreement on behalf of CCC.

§ 1492.20 Customs entry.

(a) The participant shall furnish evidence of customs entry into the importing country of the commodities purchased under a project agreement. The evidence shall consist of a copy of a customs entry certificate issued by a duly authorized official of the importing country showing (1) the kind and quantity of the commodity, (2) carrier identification, (3) purchase authorization numbers, (4) the exporter's name, and (5) exporter's sales invoice number.

(b) The customs entry certificate shall be furnished to the General Sales Manager no later than sixty (60) days after the date of export of the commodity from the United States.

§ 1492.21 Books, records, reports, and compliance policies.

(a) The participant shall maintain books and records covering all transactions relating to the project agreement. Such books and records, including pertinent documents, correspondence, memoranda and other records of the participant shall be subject to examination by the General Sales Manager or the General Sales Manager's authorized representative during normal business hours for a period of three years after the entire amount due CCC under the project agreement has been repaid.

(b) The participant shall furnish to the General Sales Manager such books, reports and information as may be required by the project agreement. Such reports shall include, but shall not be limited to, progress reports on the

implementation of the project, reports covering the receipt and expenditure of project funds and financial reports.

(c) Activities under a project agreement shall be subject to such other review or investigation as the General Sales Manager deems necessary to assure compliance with the provisions of the project agreement.

(d) The participant shall cooperate with and give reasonable assistance to the General Sales Manager or the General Sales Manager's authorized representative in such review or investigation as well as the examination referred to in paragraph (a) of this section.

§ 1492.22 Warranties by the participant.

The participant represents, warrants, and undertakes as follows:

(a) The participant is a duly organized and existing legal entity under the laws applicable to it, has full authority to carry on its present business and to enter into the project agreement, and has furnished the General Sales Manager with a true copy of the documents by which it was organized.

(b) The participant has no business affiliations, i.e. ownership interest, with any firm or individual other than those disclosed in the application for a project agreement.

(c) The participant has disclosed to the General Sales Manager in writing all agreements which are material to the project agreement.

(d) The participant knows of no conditions which will interfere with, or threaten to interfere with, the participant's ability to discharge its obligations under the project agreement, and agrees to promptly inform and consult with the General Sales Manager with respect to any conditions which may arise which would have such effect.

(e) The participant shall not transfer or assign the project agreement or any of its rights thereunder, nor sell, transfer or assign its rights to any facility or any other real or personal property financed in whole or in part with project funds without the approval of the General Sales Manager.

(f) The participant shall obtain the written approval of the General Sales Manager before entering into any joint venture or any other arrangement with another entity that involves the commodities imported or to be imported under this agreement or which involves the project financed with project funds.

(g) The participant warrants that no person or selling agency has been employed or retained to solicit or secure the project agreement on an agreement or understanding for a commission, percentage, brokerage, or contingent fee, except bona fide employees or bona fide established commercial or selling agencies maintained by the participant for the purpose of securing business. For breach or violation of this warranty, the General Sales Manager shall have the right, without limitation on any other rights it may have, to cancel the project agreement without liability to CCC.

(h) If the participant is required under § 1492.9 to invest in the project, the participant warrants that none of the resources invested are subject to any encumbrances other than those which are disclosed in the financial information referred to in § 1492.5(a)(12) or otherwise disclosed in writing to the General Sales Manager.

§ 1492.23 Events of default.

The occurrence of any of the following events may, at the election of the General Sales Manager, be deemed to be a default in the performance of the participant under the project agreement:

(a) Failure of the participant to make prompt and full repayment of principal or interest when due, or of any other payment required under the project agreement.

(b) A breach on the part of the participant of any obligation or warranty under the project agreement unless the General Sales Manager permits the participant to cure the breach within a specified time and the participant cures it to the satisfaction of CCC within that time.

(c) A false representation made by or on behalf of the participant in obtaining the project agreement, in the project agreement, or in the performance of the project agreement.

(d) A determination by a court of competent jurisdiction or an admission by the participant that the participant is insolvent, bankrupt, or otherwise unable to pay its debts as they become due.

§ 1492.24 Remedies of CCC in the event of default.

(a) *Termination of disbursements.* Upon the occurrence of any default set forth in § 1492.23, or upon the failure of the participant to perform any other obligation specified in the project agreement which permits the taking of the actions set forth in this § 1492.24, the General Sales Manager shall have the right to take any or all of the following actions:

(1) Decline to issue commodity purchase authorizations to the participant;

(2) Cancel outstanding commodity purchase authorizations;

(3) Decline to enter into a commodity agreement with an exporter; and

(4) Suspend or cancel outstanding commodity agreements entered into with exporters under which CCC agreed to purchase the exporter's accounts receivable.

(b) *Change in political, economic, or monetary situation.* In the event of any material change in the political, economic, or monetary situation in the importing country which the General Sales Manager determines will have an adverse effect on the ability of the participant to fulfill its obligations under the project agreement, the General Sales Manager shall have the right to take any or all of the actions set forth in paragraph (a) of this section.

(c) *Acceleration of payment of principal.* Upon the occurrence of any default set forth in § 1492.23, the General Sales Manager shall have the right to declare all or any part of the principal and interest thereon to be immediately due and payable.

(d) *Remedy in case of contingent fee.* For breach or violation of the warranty against contingent fees which is set forth in § 1492.22(g), the General Sales Manager shall be entitled to cancel the project agreement or, at the General Sales Manger's discretion, to require the participant to pay to CCC in U.S. dollars the full amount such commission, percentage, brokerage, or contingent fee or to deduct commission, percentage, brokerage, or contingent fee from payments of prinicpal made to CCC by the participant.

(e) *Refunds to CCC.* If the General Sales Manager determines that any disbursement of project funds is not supported by valid documentation as required by GSM-301 or the project agreement, or was at the time of disbursement in violation of the project agreement or the laws governing CCC, the participant shall pay to CCC on demand the amount of such disbursement together with the interest thereon at the interest rate specified in the project agreement from the date of such disbursement to the date payment is received by CCC. Upon receipt of such refund, CCC will deduct the amount of the refund, exclusive of interest, from the total principal outstanding and due CCC.

(f) *Force majeure.*

(1) The provisions of this paragraph § 1492.24(g) shall apply in lieu of any other provisions of GSM-301 or the project agreement with respect to default, delay, or failure to perform in carrying out the project if the participant maintains, and the General Sales Manager determines in writing, that such default, delay, or failure to perform on the part of the participant is due to force majeure (including, but not limited

to, war, insurrection, riots, fires, strikes, floods, acts of God, acts of governments and agencies thereof which the participant had no reason to anticipate) and such default, delay, or failure to perform could not have been prevented by the exercise of reasonable diligence on the part of the participant.

(2) The General Sales Manager shall have the right to take any or all actions set forth in § 1492.24(a) pending a final determination as to whether the project may be carried out. If the cause of the default, delay, or failure to perform cannot be overcome by the participant, the General Sales Manager shall be entitled to take any or all actions set forth in § 1492.24(a) and to declare all or any part of the outstanding principal due CCC to be immediately due and payable to CCC.

(g) *Other remedies.* The use by the General Sales Manager of any remedy provided for in this § 1492.24 shall not prevent the General Sales Manager from using any other remedy provided for in the project agreement or otherwise available at law or equity, including any sanction or penalty under criminal or civil fraud statutes.

Commodity Agreements

§ 1492.25 General.

(a) Sections 1492.25 to 1492.43 contain the provisions under which an exporter who makes an export sale to a participant and who has entered into a commodity agreement with CCC may, after export of the commodity, receive payment from CCC for the export value of the commodity through the purchase by CCC of the exporter's account receivable for that portion of the export value of the commodity for which CCC will provide financing. CCC will issue commodity purchase authorizations pursuant to § 1492.13 which will authorize the participant or the participant's authorized agent to purchase eligible commodities from exporters.

(b) After export of the commodity, the exporter must furnish the applicable documents and certifications required by § 1492.31 to the address specified in § 1492.43(b)(2). If the documents and certifications are in order and acceptable to CCC, CCC will purchase only that portion of the exporter's account receivable for which the exporter has complied with the applicable provisions of this regulation will make prompt payment to the exporter.

(c) The General Sales Manager reserves the right at any time and for any reason or cause whatsoever to supplement, modify, or revoke any commodity purchase authorization, including termination of commodity agreements made pursuant to such purchase authorization.

§ 1492.26 Submission of application for a commodity agreement.

(a) An exporter shall submit a written application (e.g. letter, telex, or TWX) to enter into a commodity agreement to the office specified in § 1492.43(b). If the application is made by telephone, it must be confirmed in writing. An application shall include the full business name and address of the exporter and the following information:

(1) Name and address of the participant and, if export is to be made to an agent of the participant, the name and address of such agent.

(2) The name of the importing country.

(3) Date of sale.

(4) Exporter's sale number.

(5) Delivery period.

(6) Kind and description of commodity.

(7) Quantity and sale contract tolerance, if applicable.

(8) The unit price and total export value of the commodity.

(9) The name and address of the intervening purchaser, if the commodity is to be sold through an intervening purchaser, and a statement that the sale of the commodity is or will be conditioned on its resale by the intervening purchaser to the participant and that the commodity will be shipped directly to the participant or to the participant's agent in the destination country.

(10) CCC purchase authorization number.

(11) Any additional information as determined by the General Sales Manager.

(b) Upon receiving an application complying with the applicable provisions of GSM-301, the General Sales Manager shall determine whether the application shall be approved. If approved, the General Sales Manager shall cause a commodity agreement to be issued to the exporter.

(c) An application may be approved as submitted, approved with modification, or rejected by the General Sales Manager.

§ 1492.27 Commodity agreements.

(a) The commodity agreement between the exporter and CCC shall consist of the exporter's application, the General Sales Manager's written acceptance of the application and the applicable terms and conditions of GSM-301, including any amendments or supplemental announcements here under which are in effect at the time the commodity agreement is issued to the exporter.

(b) The commodity agreement shall provide that CCC will purchase the exporter's account receivable after export of the commodity to the participant and upon submission to CCC of the applicable documents and certifications required by § 1492.31.

(c) The commodity agreement may contain such terms and conditions, not inconsistent with GSM-301, as the General Sales Manager deems necessary in the interest of CCC.

(d) An exporter shall promptly notify the General Sales Manager when he is unable to fulfill his obligations under a commodity agreement.

§ 1492.28 *Amendments to commodity agreements.*

The commodity agreement may be amended provided such amendment is in conformity with GSM-301 at the time of the amendment and the amendment is determined by the General Sales Manager to be in the interest of CCC.

§ 1492.29 Export periods.

The commodity shall be exported during the export period specified in the commodity agreement and purchase authorization unless the General Sales Manager agrees to an extension of such export period.

§ 1492.30 Partial payment by the participant.

Purchase authorizations issued pursuant to § 1492.13 shall specify that the project participant make at the time of export an initial payment of at least 15 percent of the export value of the commodity. The arrangement for payment of the amount of the export value not financed by CCC is a matter for agreement between the exporter and the participant.

§ 1492.31 Documents required after export.

(a) CCC will purchase an exporter's account receivable only if the documents specified in paragrahs (b) and (c) of this section are received by the Treasurer, CCC, within forty-five (45) days, or any extension thereof granted by the Treasurer, CCC, after the date of export of the commodity.

(b) The exporter shall submit a "Combined Application for Disbursement, Assignment of Account Receivable and Certification (GSM-301)" which shall include:

(1) A written application for disbursement showing: (i) the commodity agreement number; (ii) total export value of the commodity exported; and (iii) the value of the commodity for which payment is requested from CCC.

(2) An assignment of the account receivable, acceptable to CCC, arising from the export sale.

(3) A certification by the exporter which provides: (i) that the exporter has entered into an export sales contract with the participant to sell the commodity exported; (ii) the date of the sale; (iii) the kind, grade, quality, quantity, agreed upon price for the commodity and delivery terms of the sale; (iv) that the exporter has in the exporter's files documents evidencing the export sale contract and the obligation of the participant to the exporter for that portion of the value of the export sale for which CCC will purchase the exporter's account receivable, and that the exporter will retain and furnish such documents to CCC on demand until 3 years after the final date of export of the commodity under the export sale; (v) that the kind, grade, quality, and quantity of the commodity called for in the export sales contract and reported to CCC in the application for a commodity agreement has been exported to the participant; and (vi) that the exporter knows of no defenses to the account receivable to be assigned to CCC.

(4) A copy of the sales invoice to the participant or, if the commodity has been sold through an intervening purchaser, a copy of the intervening purchaser's sales invoice to the participant.

(c) The exporter shall furnish with the application or disbursement, the following evidence of export, as applicable:

(1) If the commodity is exported by ocean carrier, one non-negotiable copy of either (i) an onboard ocean bill of lading or (ii) an ocean bill of lading with an onboard endorsement, dated and signed or initialed on behalf of the carrier. The bill of lading must be certified by the exporter as being a true copy and must show the kind and quantity of commodity, the date and place of loading the commodity, the name of the ocean carrier, the importing country, and the name and address of both the exporter and the participant, or if the export was made to an agent of the participant, the name and address of the agent.

(2) If the commodity is exported by aircraft, one non-negotiable copy of an airway bill, dated and signed or initialed on behalf of the carrier. The airway bill must be certified by the exporter as being a true copy and must show the kind and quantity of commodity, date and place of loading the commodity, the name of the airline, the destination country and the name and address of both the exporter and the participant, or if export was made to an agent of the participant, the name and address of the agent.

(3) If the commodity is exported by rail or truck, one copy of the bill of lading certified by the exporter as being a true copy, an authenticiated landing certificate or similar document issued by an official of the government of the importing country showing the kind and quantity of commodity, the place and date of entry into the importing country, rail or truck identification, and the name and address of both the exporter and the participant, or if export was made to an agent of the participant, the name and address of the agent.

(4) If the consignee shown in the document provided for in paragraph (c) of this section is other than the participant named in the commodity agreement, the exporter shall furnish such additional information as the Treasurer, CCC, may request to show that export was made in accordance with the instructions of, or the export sale contract with the participant.

(5) For commodities transshipped through Canada via the Great Lakes or the St. Lawrence River, the exporter shall certify that the commodity transshipped was produced in the United States.

(6) A statement from a U.S. bank showing that the documents required under the letter of credit established by the participant in favor of the exporter for that portion of the export value of the commodity for which the participant will pay with the participants own resources have been received by the U.S. bank and such documents are in order. If a letter of credit was not established by the participant in favor of the exporter, such other evidence acceptable to the Treasurer, CCC, showing that the participant, or the participant's agent, has accepted the commodity exported.

(7) If the exporter is unable to supply documentary evidence of export as specified in this section, the exporter may submit such other documentary evidence as may be acceptable to the Treasurer, CCC.

(d) On receipt of the documents described in paragraphs (b) and (c) of this section, the Treasurer, CCC, will promptly pay to the exporter, the amount of the account receivable for which CCC will finance.

(e) If an acceptable application for disbursement and the supporting documents described in paragraphs (b) and (c) of this section have not been received by the Treasurer, CCC, within 45 days from the date of delivery, or any extension thereof, the commodity agreement shall be null and void.

§ 1492.32 Assignments.

The exporter shall not assign any claim or rights or any amounts payable under the commodity agreement, in whole or in part, without written approval of the Controller, CCC.

§ 1492.33 Covenant against contingent fees.

The exporter warrants that no person or selling agency has been employed or retained to solicit or secure the commodity agreement on an agreement or understanding of a commission, percentage, brokerage, or contingent fee, except bona fide employees or bona fide established commercial or selling agencies maintained by the exporter for the purpose of securing business. For breach or violation of this warranty, the General Sales Manager shall have the right, without limitation on any other rights the General Sales Manager may have, to cancel the commodity agreement without liability to CCC.

§ 1492.34 Exporter's records and accounts.

The General Sales Manager, or the General Sales Manager's authorized representative, shall have access to and the right to examine any directly pertinent books, documents, papers and records of the exporter involving transactions related to the financed export credit sale until expiration of three years from the date the last export was made under the commodity agreement.

Miscellaneous Provisions

§ 1492.35 Use of representatives.

The participant may designate one or more representatives or agents who may be given authority to request purchase authorizations under the project agreement on behalf of the participant and to execute any and all documents required to be furnished to the General Sales Manager by the participant.

§ 1492.36 Successors to rights of CCC.

If, by operation of any law of the United States or by virtue of assignment, any agency of the Government of the United States succeeds to the rights and obligations of CCC under a project agreement, such agency shall be deemed to be CCC for purposes of the project agreement.

§ 1492.37 Applicable law.

The project agreement shall be deemed to be a contract made under the laws of the United States and shall be governed by and construed in accordance with such laws.

§ 1492.38 Notice.

Any notice, request, or communication made by the General Sales Manager, CCC, or by the participant pursuant to the project agreement or by the exporter pursuant to the commodity agreement shall be in writing and shall be deemed to have been duly made to the other party when received by such other party by hand or my mail, telegram, cable, radiogram, or other method.

§ 1492.39 Officials not to benefit.

No member of or Delegate to Congress, or Resident Commissioner, shall be admitted to any share or part of the project agreement with the participant or to the commodity agreement with the exporter or to any benefit that may arise therefrom, but this provision shall not be construed to extend to the project agreement or to the commodity agreement if made with a corporation for its general benefit.

§ 1492.40 Purchasing agents employed by the participant.

Prior to entering into any agreement for the services of a United States person or firm as its agent to handle procurement of the commodities to be financed under the project agreement, the participant shall submit the name of the proposed purchasing agent and the agent agreement to the General Sales Manager for approval. The participant shall also obtain the approval of the General Sales manager of any amendments to such agent agreement. The General Sales Manager will notify the participant in writing of its approval or disapproval of the proposed purchasing agent and of the proposed agent agreement or amendment thereto. A copy of the executed agent agreement and any amendment shall be furnished to the General Sales Manager.

§ 1492.41 Waiver.

Any failure or delay by CCC to exercise any of its rights, in whole or in part, under a project agreement or under a commodity agreement shall not constitute a waiver of any of such rights.

§ 1492.42 English language.

All documents, opinions, and certificates required to be furnished by the participant under a project agreement shall be furnished without cost to the General Sales Manager or to CCC, and, if not in the English language shall be accompanied by certified English translations.

§ 1492.43 Communications.

(a) *Project agreements.* (1) Unless otherwise provided, all written applications, requests, notifications, or communications by the participant pertaining to the project agreement shall be addressed to the General Sales Manager, Foreign Agricultural Service, U.S. Department of Agriculture, Washington, D.C. 20250.

(2) Information to be furnished in an application for a project agreement, financing terms and interest rates currently in effect may be obtained from the General Sales Manager at the address provided in subparagraph (1) above.

(3) The participant shall make payment of the principal and interest and all other payments required to be made to CCC, as agreed to by CCC and the participant, to the Treasurer, Commodity Credit Corporation, U.S. Department of Agriculture, Washington, D.C. 20250, unless otherwise instructed by CCC in writing.

(b) *Commodity agreements.* (1) Unless otherwise provided, all applications, both telephone and written, notifications, or communications by the exporter pertaining to the commodity agreement shall be addressed to the General Sales Manager, Foreign Agricultural Service, U.S. Department of Agriculture, Washington, D.C. 20250.

(2) The exporter shall forward documents for financing to the U.S. Department of Agriculture, Commodity Credit Corporation, P.O. Box 2415, Washington, D.C. 20013.

Signed at Washington, D.C., August 4, 1980.

Kelly Harrison,

Vice President, Commodity Credit Corporation and General Sales Manager, Foreign Agricultural Service.

[FR Doc. 80-23840 Filed 8-5-80; 8:45 am]

BILLING CODE 3410-10-M

Reader Aids

Federal Register
Vol. 45, No. 153
Wednesday, August 6, 1980

INFORMATION AND ASSISTANCE

Questions and requests for specific information may be directed to the following numbers. General inquiries may be made by dialing 202-523-5240.

Federal Register, Daily Issue:

202-783-3238	Subscription orders and problems (GPO) "Dial-a-Reg" (recorded summary of highlighted documents appearing in next day's issue):
202-523-5022	Washington, D.C.
312-663-0884	Chicago, Ill.
213-688-6694	Los Angeles, Calif.
202-523-3187	Scheduling of documents for publication
523-5240	Photo copies of documents appearing in the Federal Register
523-5237	Corrections
633-6930	Public Inspection Desk
523-5227	Index and Finding Aids
523-5235	Public Briefings: "How To Use the Federal Register."

Code of Federal Regulations (CFR):

523-3419	
523-3517	
523-5227	Index and Finding Aids

Presidential Documents:

523-5233	Executive Orders and Proclamations
523-5235	Public Papers of the Presidents, and Weekly Compilation of Presidential Documents

Public Laws:

523-5266 -5282	Public Law Numbers and Dates, Slip Laws, U.S. Statutes at Large, and Index
275-3030	Slip Law Orders (GPO)

Other Publications and Services:

523-5239	TTY for the Deaf
523-5230	U.S. Government Manual
523-3408	Automation
523-4534	Special Projects
523-3517	Privacy Act Compilation

FEDERAL REGISTER PAGES AND DATES, AUGUST

51167-51538 1
51539-51754 4
51755-52138 5
52139-52354 6

CFR PARTS AFFECTED DURING AUGUST

At the end of each month, the Office of the Federal Register publishes separately a list of CFR Sections Affected (LSA), which lists parts and sections affected by documents published since the revision date of each title.

3 CFR
Executive Orders:
11790 (*See* 12231) 52139
12230 51167
12231 52139
Proclamations
4776 51539
Administrative Orders:
Memorandums:
July 31, 1980 51169-51174

5 CFR
410 51755
Ch. XIV 51541
Proposed Rules:
359 51214

6 CFR
705 51175
706 51541

7 CFR
210 51175
301 51176
331 51755
722 51755
910 51177
917 51179
921 51180
924 51180
946 52141
948 51182
958 52141
967 52143
1137 51542
1446 51756
2853 51757
Proposed Rules:
29 51572
272 51216
273 51216
404 51573
800 52339
985 51818
1464 51579
1492 52342
1990 51818
2858 51217
2871 51217

8 CFR
264 52143
Proposed Rules:
Ch. I 51832
214 51580

9 CFR
Proposed Rules:
318 51832

10 CFR
110 51184
212 52112
445 51763
Proposed Rules:
205 51833
378 51581

12 CFR
201 52144
Proposed Rules:
Ch. I 52166
Ch. II 51581
525 52173
541 ..... 52173, 52177
545 ..... 52173, 52177
561 52177
563 ..... 52173, 52177

13 CFR
101 51763

14 CFR
39 51543-51546
71 51546
91 51547
121 51547
127 51547
135 51547
375 51838
Proposed Rules:
71 51587-51590
73 51591

15 CFR
Proposed Rules:
19 51592

16 CFR
436 ..... 51763, 51765
Proposed Rules:
13 ..... 51593, 51596
239 51838
705 51218

17 CFR
7 51520
Proposed Rules:
1 51598
4 51600

18 CFR
Proposed Rules:
271 51219
273 51219
274 51219
301 51614

19 CFR
Proposed Rules:
Ch. I 51490

20 CFR
404 52078

416 52078
Proposed Rules:
Ch. II 51615

21 CFR

172 51766
175 51184
176 51767
193 51768
884 ..... 51185, 51186
Proposed Rules:
Ch. II 51832
610 51226
660 51226

23 CFR

Proposed Rules:
625 51720
652 51720
663 51720

24 CFR

203 ..... 51769, 51770
207 ..... 51769, 51771
213 51771
220 ..... 51769, 51770
221 ..... 51770, 51771
222 51770
226 51770
235 51770
279 51510
571 51516
885 51186
1710 52144
Proposed Rules:
570 51227
865 51228
866 51615
886 51228
888 51228
889 51229

26 CFR

26a 51771
Proposed Rules:
26 51840

27 CFR

Proposed Rules:
Ch. I 51496

28 CFR

0 52145
Proposed Rules:
Ch. I 51506, 51832
16 52183
50 52183

29 CFR

11 51187
40 51192
102 51192
1952 51775
1625 51547
1999 51187
2520 51446
2550 51194
Proposed Rules:
Ch. XIV 51229
2520 51231
2530 51231
2550 ..... 51231, 51840

30 CFR

Ch. VII 51547
800 52306
801 52306
805 52306
806 52306
807 52306
808 52306
Proposed Rules:
784 51240
817 51240

32 CFR

763 51776
888d 52145

33 CFR

117 51550
207 ..... 51551, 51555
Proposed Rules:
117 ..... 51617, 51618

34 CFR

Proposed Rules:
100 52052

36 CFR

Proposed Rules:
7 51618
1202 51843

37 CFR

304 51197

38 CFR

21 51777

39 CFR

Proposed Rules:
111 51846

40 CFR

35 51484
52 ..... 51198, 51199, 52148
122 52149
180 ..... 51200, 51781, 51782
Proposed Rules:
52 ..... 51619, 51620, 52184
167 52184
169 52184
180 51854
410 52185
717 51855

41 CFR

Ch. 101 51201

42 CFR

57 ..... 51201, 51205
58 ..... 51209, 51556
405 51783
455 51559
Proposed Rules:
72 51241

43 CFR

8351 51740
Proposed Rules:
2560 52303
Public Land Orders:
5742 51787
5743 51787
5744 51788

44 CFR

65 ..... 51212, 51788
67 ..... 51213, 51559, 51789, 51796
Proposed Rules:
6 51426
67 51855-51858

45 CFR

1060 51561
121o 52130
121p 52130
121q 52130
121r 52130
Proposed Rules:
121q 52136
190 51243

47 CFR

13 52154
22 52149
68 52151
73 ..... 51561-51563, 52152
74 51563
76 52153
81 52154
83 52154
87 52154
90 51811
97 51564
Proposed Rules:
Ch. I 51251
2 ..... 51251, 51252
15 51251
21 51252
73 51624
74 51252
94 51252

48 CFR

Proposed Rules:
9 51253

49 CFR

571 51569
1002 ..... 51213, 52158
1003 ..... 51213, 52158
1033 ..... 51812-51815, 52158, 52160, 52161
1045A 51213, 52158
1056 ..... 51213, 52158
1062 ..... 51213, 52158
1100 ..... 51213, 52158
1130 ..... 51213, 52158
1150 ..... 51213, 52158
1309 52161
1310 52161
Proposed Rules:
398 51625
571 ..... 51626, 51628
1102 51858
1116 52186

50 CFR

Proposed Rules:
32 52163
216 51254
265 51858
611 51254
655 51254
661 51861

AGENCY PUBLICATION ON ASSIGNED DAYS OF THE WEEK

The following agencies have agreed to publish all documents on two assigned days of the week (Monday/Thursday or Tuesday/Friday). This is a voluntary program. (See OFR NOTICE 41 FR 32914, August 6, 1976.)

Monday	Tuesday	Wednesday	Thursday	Friday
DOT/SECRETARY	USDA/ASCS		DOT/SECRETARY	USDA/ASCS
DOT/COAST GUARD	USDA/APHIS		DOT/COAST GUARD	USDA/APHIS
DOT/FAA	USDA/FNS		DOT/FAA	USDA/FNS
DOT/FHWA	USDA/FSQS		DOT/FHWA	USDA/FSQS
DOT/FRA	USDA/REA		DOT/FRA	USDA/REA
DOT/NHTSA	MSPB/OPM		DOT/NHTSA	MSPB/OPM
DOT/RSPA	LABOR		DOT/RSPA	LABOR
DOT/SLSDC	HHS/FDA		DOT/SLSDC	HHS/FDA
DOT/UMTA			DOT/UMTA	
CSA			CSA	

Documents normally scheduled for publication on a day that will be a Federal holiday will be published the next work day following the holiday.

Comments on this program are still invited. Comments should be submitted to the Day-of-the-Week Program Coordinator Office of the Federal Register, National Archives and Records Service, General Services Administration, Washington, D.C. 20408

REMINDERS

The "reminders" below identify documents that appeared in issues of the Federal Register 15 days or more ago. Inclusion or exclusion from this list has no legal significance.

Rules Going Into Effect Today

FEDERAL EMERGENCY MANAGEMENT AGENCY

45862 7-7-80 / Disaster assistance project administration provisions

TREASURY DEPARTMENT

Customs Service—

45579 7-7-80 / Metric conversion of quantities of merchandise which may be included in an individual's personal exemption

Deadlines for Comments On Proposed Rules for the Week of August 10 through August 16, 1980

AGRICULTURE DEPARTMENT

Agricultural Marketing Service—

50347 7-29-80 / Domestic shipments of Florida seedless limes and imports of seedless limes; size requirements comments by 8-13-80

Food Safety and Quality Service—

40129 6-13-80 / Transportation and other transactions concerning certain undenatured lungs or lung lobes; comments by 8-12-80

Rural Electrification Administration—

47436 7-15-80 / Specification for aerial and underground telephone cables; comments by 8-14-80

47437 7-15-80 / Specification for Direct Burial Telephone Cables (Air Core); comments by 8-14-80

ARCHITECTURAL AND TRANSPORTATION BARRIERS COMPLIANCE BOARD

42608 6-25-80 / Information availability; procedures for obtaining information (interim rule); comments by 8-11-80

CIVIL AERONAUTICS BOARD

42317 6-24-80 / Simplification of regulations for airline ticket and ticket counter notices to passengers; comments by 8-15-80

[*See also* 45 FR 25817, 4-16-80]

COMMERCE DEPARTMENT

Economic Development Administration—

39242 6-10-80 / Public works projects involving skill training center facilities and land assembly; comments by 8-11-80

National Oceanic and Atmospheric Administration—

39507 6-11-80 / Marine sanctuaries; designation of the Gray's Reef Marine Sanctuary 17.5 mi east of Sapelo Island, Ga.; comments by 8-11-80

CONSUMER PRODUCT SAFETY COMMISSION

39434 6-10-80 / Urea-formaldehyde foam insulation; performance and technical data notification; comments by 8-11-80

DEFENSE DEPARTMENT

Engineers Corps—

46093 7-9-80 / Banana River, Cape Canaveral Air Force Station; establishment of restricted area; comments by 8-15-80

EDUCATION DEPARTMENT

Elementary and Secondary Education Office—

39712 6-11-80 / Financial assistance to local and State agencies to meet special educational needs and financial assistance to local educational agencies for children with special educational needs; comments by 8-11-80

Office of the Secretary—

39708 6-11-80 / Amendment of EDGAR to clarify Department's policy regarding participation of students enrolled in private schools; comments by 8-11-80

ENERGY DEPARTMENT

Economic Regulatory Administration—

41330 6-18-80 / Standby Gasoline Rationing Plan; comments by 8-15-80

Federal Energy Regulatory Commission—

45597 7-7-80 / Availability of petition requesting rulemaking for an incentive price for natural gas produced from certain depths; comments by 8-15-80

47863 7-17-80 / High-cost natural gas produced from wells drilled in deep water; comments by 8-11-80

49591 7-25-80 / Small hydroelectric power projects with a proposed installed capacity of 5 megawatts or less, exemption from all or part of part I of the Federal Power Act; comments by 8-12-80

49958 7-28-80 / Water power projects and project works; dam safety requirements; comments by 8-15-80

[*See also* 45 FR 41608, 6-19-80]

ENVIRONMENTAL PROTECTION AGENCY

47166 7-14-80 / Approval and promulgation of implementation plans—Massachusetts; Procter and Gamble sulfur in fuel limitation; comments by 8-13-80

47168 7-14-80 / Carbon dioxide, nitrogen, and combustible production gas; exemption from requirement of a tolerance; comments by 8-13-80

25828 4-16-80 / Proposed policy and procedures for identifying, assessing, and regulating airborne substances posing a risk of cancer; Advance notice of proposed generic standards; comments extended to 8-12-80

[*See also* 44 FR 58642, 58662, 10-10-79]

FARM CREDIT ADMINISTRATION

39507 6-11-80 / Internal Control for operations of the Farm Credit banks and associations; comments by 8-11-80

FEDERAL COMMUNICATIONS COMMISSION

32013 5-15-80 / Allocating spectrum in the 928-941 MHz Band and to establish other rules, policies, and procedures for one-way paging stations in the Domestic Public Mobile Radio Service and the Private Land Mobile Radio Services; comments by 8-15-80

46458 7-10-80 / Deleting Provisions That Limit the Entry of New Stations Into the VHF Public Coast Station Market and Requiring Applicants for Public Coast Stations To Meet Certain Financial Qualifications; reply comments period extended to 8-15-80

[*See also* 45 FR 46458, 7-10-80]

37868 6-5-80 / FM broadcast station in Grover City, Calif.; changes in table of assignment; reply comments by 8-11-80

42725 6-25-80 / FM broadcast station in Lake Havasu City, Ariz.; changes in table of assignments; comments by 8-11-80

37869 6-5-80 / FM broadcast station in Orchard, Nebr.; Proposed changes in table of assignments; reply comments by 8-11-80

47885 7-17-80 / FM broadcast stations in North Charleston, Goose Creek, and Mount Pleasant, S.C.; reply comments by 8-11-80

17603 3-19-80 / Modification of FM broadcast station rules to increase the availability of commercial FM broadcast assigments; reply comments by 8-13-80

49624 7-25-80 / MTS and WATS Market Structure; Compensation for use of local telephone exchange facilities for interstate or foreign telecommunications; comments extended to 8-15-80

[*See also* 45 FR 20142, 3-27-80 and 45 FR 26274, 4-21-80]

25418 4-15-80 / Station identification requirements in the Amateur Radio Service; reply comments by 8-15-80

43442 6-27-80 / Swept frequency automatic vehicle identification system using microwave frequencies; reply comments by 8-15-80

42347 6-24-80 / Verification and methods of measurement of computing devices; reply comments by 8-15-80

GENERAL SERVICES ADMINISTRATION

Automated Data and Telecommunications Services—

31313 5-13-80 / ADP Services; sharing and procurement; temporary regulations; comments by 8-11-80

HEALTH AND HUMAN SERVICES DEPARTMENT

Food and Drug Administration—

40153 6-13-80 / Bottled water; quality standard; comments by 8-12-80

Social Security Administration—

39309 6-10-80 / Federal old-age, survivors, and disability insurance benefits for husbands and surviving young divorced fathers; comments by 8-11-80

INTERIOR DEPARTMENT

Fish and Wildlife Service—

31447 5-13-80 / Endangered and threatened wildlife and plants; review of status of the orangefin madtom (*Noturus gilberti*) and the Roanoke logperch (*Percina rex*); comments by 8-11-80

47716 7-16-80 / Hunting and sport fishing; proposed addition of National Wildlife Refuges to list of open areas; comments by 8-15-80

National Park Service—

47092 7-11-80 / Right-of-way regulations for areas of National Park System; interim rule; comments by 8-11-80

Surface Mining Reclamation and Enforcement Office—

47162 7-14-80 / Procedures for review of State Program Amendments; comments by 8-15-80

46818 7-11-80 / Reclamation of eligible land and water, petition for rulemaking; comments by 8-11-80

INTERSTATE COMMERCE COMMISSION

47172 7-14-80 / Conferring designated port status on Dallas/Forth Worth, Texas; import, export, and interstate transportation of wildlife; comments by 8-13-80

46459 7-10-80 / Special temporary authority procedures; comments period extended to 8-11-80

[*See also* 45 FR 37912, 6-5-80]

NUCLEAR REGULATORY COMMISSION

39519 6-11-80 / Rulemaking petition for exemption of industrial radiography licensees from general licensing requirements; comments by 8-11-80

PEACE CORPS

47710 7-16-80 / Public access to classified mail; comments by 8-15-80

PERSONNEL MANAGEMENT OFFICE

39277 6-10-80 / Recruitment, selection, and placement (general); comments by 8-11-80

SECURITIES AND EXCHANGE COMMISSION

40145 6-13-80 / Consideration of a system of classifying smaller issuers for purposes of modifying certain reporting and other requirements; comments by 8-15-80

47853 7-18-80 / Proposed revision of Form U-4, Uniform Application for Securities and Commodities Industry Registration; comments by 8-13-80

SMALL BUSINESS ADMINISTRATION

31410 5-13-80 / Removal of interest rate ceiling of 8 percent on section 501 loans to State development companies and setting a rate that is consistent with the rate for section 7(a) business loans; comments by 8-11-80

TRANSPORTATION DEPARTMENT

Federal Aviation Administration—

39857 6-12-80 / Certification and operations: Land airports serving CAB-certificated air carriers; expansion of applicability; comments by 8-11-80

Research and Special Programs Administration—

46417 7-10-80 / Hazardous wastes; identification numbers, comments by 8-12-80

40627 6-16-80 / Reduction in requirements for written reports of transportation incidents involving packagings containing certain low risk hazardous materials; comments by 8-14-80

TREASURY DEPARTMENT

Comptroller of the Currency—

40613 6-16-80 / Use of data processing technology and the offering of data processing services by national banks; comments by 8-15-80

Internal Revenue Service—

39869 6-12-80 / Coordination of vesting and discrimination requirements for qualified plans; comments by 8-11-80

39512 6-11-80 / Income tax; treatment of gain from disposition of certain oil, gas, or geothermal property; comments by 8-11-80

VETERANS ADMINISTRATION

47166 7-14-80 / Incompetent veterans hospitalized, institutionalized, or domiciled at Government expense; reduction of payable benefits; comments by 8-13-80

Deadlines for Comments On Proposed Rules for the Week of August 17 through August 23, 1980

AGRICULTURE DEPARTMENT

Agricultural Marketing Service—

50773 7-31-80 / Milk marketing orders; Nebraska and Western Iowa; comments by 8-20-80

Animal and Plant Health Inspection Service—

40965 6-17-80 / Brucellosis indemnity; comments by 8-18-80

Commodity Credit Corporation—

49085 7-23-80 / Terms and conditions of 1980-81 Price Support Program for Milk; comments by 8-18-80

Farmers Home Administration—

41647 6-20-80 / Business and Industry Loan Program; administrative provisions; comments by 8-19-80

Federal Crop Insurance Corporation—

41640 6-20-80 / Proposed grape crop insurance regulations; comments by 8-19-80

Rural Electrification Administration—

48909 7-22-80 / Loan terms and conditions; comments by 8-21-80

41646 6-20-80 / Proposed revision of accounting and disclosure requirements for jointly-owned electric plants; comments by 8-19-80

48909 7-22-80 / Revision of REA Form 805, "Electric Transmission Specifications and Drawings"; comments by 8-21-80

48910 7-22-80 / Revision of standard for minimum acceptable quality of wood poles, stubs, and anchor logs; comments by 8-21-80

CIVIL AERONAUTICS BOARD

48654 7-21-80 / Fare flexibility for Puerto Rico/Virgin Islands, Hawaii, and Alaska; comments by 8-18-80

48654 7-21-80 / Interim fare suspension policies for Puerto Rico/Virgin Islands, Hawaii, and lower-48-Alaska (but not intra-Alaska) markets; comments by 8-18-80

42318 6-24-80 / Intermodal Services of air carriers and foreign air carriers; liberalize regulation; comments by 8-22-80

ENERGY DEPARTMENT

48910 7-22-80 / Patent licensing; comments by 8-21-80

Economic Regulatory Administration—

41450 6-19-80 / Exemption from natural gas incremental pricing for certain industrial facilities that commit to conversion from natural gas or petroleum to other fuels; comments by 8-20-80

40078 6-12-80 / Motor gasoline allocation revision; comments by 8-19-80

Federal Energy Regulatory Commission—

49102 7-23-80 / Affirmative action in accordance with Section 604 of Outer Continental Shelf Lands Act Amendments of 1978; inquiry; comments by 8-18-80

ENVIRONMENTAL PROTECTION AGENCY

48168 7-18-80 / Ambient air quality monitoring, data reporting, and surveillance provisions for the State of Minnesota; comments by 8-18-80

48169 7-18-80 / Ambient air quality monitoring, data reporting, and surveillance provisions for the State of Ohio; comments by 8-18-80

47877 7-17-80 / Approval and promulgation of Ohio implementation plan, comments by 8-18-80

49960 7-28-80 / Evaporative emission standard and test procedure for 1983 and later model year gasoline fueled heavy-duty vehicles; comments by 8-18-80

[*See also* 45 FR 28922, 4-30-80]

48171 7-18-80 / Financial requirements for owners and operators of hazardous waste management facilities; comments extended to 8-18-80

[Originally published at 45 FR 33154, 5-19-80]

48142 7-18-80 / Hazardous waste guidelines and regulations, interim final listing; comments extended to 8-18-80

[Originally published at 45 FR 33123, 5-19-80]

48142 7-18-80 / Hazardous waste management system; identification and listing of hazardous waste; comments extended to 8-18-80

[Originally published at 45 FR 33066, 33084, 33124, 5-19-80]

49117 7-23-80 / Methoxychor; proposed tolerance; comments by 8-22-80

49112 7-23-80 / Metropolitan Pima County, Ariz. nonattainment area plan and regulations; comments by 8-22-80

48171 7-18-80 / Phensulfonic acid-Formaldehyde-Urea condensate, proposed tolerance exemption; comments by 8-18-80

48164 7-18-80 / San Francisco Bay area air basin nonattainment area plan; comments by 8-18-80

50825 7-31-80 / Visibility protection for Federal class I areas; comments by 8-22-80

[*See also* 45 FR 34762, 5-22-80]

EQUAL EMPLOYMENT OPPORTUNITY COMMISSION

48614 7-21-80 / Procedural regulations; reconsideration of previously issued determinations of reasonable cause or dismissals of charges (interim rule); comments by 8-20-80

FEDERAL COMMUNICATIONS COMMISSION

46457 7-10-80 / FM broadcast station in Bemidji, Min., changes in table of assignments; comments by 8-22-80

40176 6-13-80 / FM Broadcast Station in Blytheville, Jonesboro, Paragould, Piggot, Trumann, Walnut Ridge and West Memphis, Ark.; Portageville, Mo. and Collierville, Tenn.; Proposed Changes in Table of Assignments; reply comments by 8-21-80

40181 6-13-80 / FM broadcast station in Boise, Idaho; reply comments by 8-21-80

40184 6-13-80 / FM broadcast stations in Chubbock and Pocatello, Idaho; table of assignments; reply comments by 8-21-80

40186 6-13-80 / FM broadcast station in Edenton, N.C.; reply comments by 8-21-80

40182 6-13-80 / FM broadcast station in Eureka, Calif.; table of assignments; reply comments by 8-21-80

46453 7-10-80 / FM broadcast station in Fruita, Colo.; channel assignment; comments by 8-22-80

41171 6-18-80 / FM broadcast station in Hertford, N.C.; reply comments by 8-21-80

40180 6-13-80 / FM broadcast station in Idaho Falls, Idaho, table of assignments; reply comments by 8-21-80

45601 7-7-80 / FM broadcast station in Seneca, Kans.; changes in table of assignments; comments by 8-18-80

46454 7-10-80 / FM broadcast stations in West Tulsa, Sand Springs, and Pawhuska, Okla.; changes in table of assignments; comments by 8-22-80

45600 7-7-80 / Frequency allocation to the instructional television fixed service, the multipoint distribution service and private operational fixed microwave; comment period extended to 8-18-80

[*See also* 45 FR 42724, 6-25-80]

47885 7-17-80 / Scope and coverage of restrictions on employee financial interests; comments by 8-22-80

FEDERAL MARITIME COMMISSION

48172 7-18-80 / Public information; appeals of denials of requests for information; comments by 8-18-80

41024 6-17-80 / Used household goods; tariff filing regulations applicable to carriers in the foreign and domestic offshore commerce of the U.S.; comments by 8-18-80

FEDERAL TRADE COMMISSION

41650 6-20-80 / Pay Less Drug Stores Northwest, Inc.; consent agreement with analysis to aid public comment; comments by 8-19-80

HEALTH AND HUMAN SERVICES DEPARTMENT

Food and Drug Administration—

48125 7-18-80 / Acrylamide and *N*-(Hydroxymethyl) Acrylamide, use as indirect food additive; objections by 8-18-80

48124 7-18-80 / Amendment to adhesives and components of paper and paperboard in contact with dry food, use of certain mixtures; objections by 8-18-80

48123 7-18-80 / Microcapsules for flavoring substances; objections by 8-18-80

Health Care Financing Administration—

41794 6-20-80 / Medicare and medicaid programs; conditions of participation: hospitals; coments by 8-19-80

Social Security Administration—

41453 6-19-80 / Supplemental Security income for the aged, blind, and disabled; reports required; comments by 8-18-80

HOUSING AND URBAN DEVELOPMENT DEPARTMENT

Office of Assistant Secretary for Housing—Federal Housing Commissioner—

41936 6-23-80 / PHA-owned projects; modernization of oil-fired heating plants; comments by 8-22-80

[Corrected at 45 FR 46380, 7-10-80]

Fair Housing and Equal Opportunity Office—

40999 6-17-80 / State and local fair housing laws; recognition of; coments by 8-18-80

INTERIOR DEPARTMENT

Fish and Wildlife Service—

44540 7-1-80 / Migratory bird hunting; late season frameworks; comments by 8-23-80

[*See also* 45 FR 13630, 2-29-80]

48830 7-21-80 / Potential proposals to amend the Appendices to the Convention on International Trade in Endangered Species of Wild Fauna and Flora; comments by 8-20-80

41322 6-18-80 / Proposal to determine Callirhoe Scabriuscula (Texas Poppy-Mallow) to be endangered species; comments by 8-18-80

48677 7-21-80 / Proposals by Australia and South Africa to amend Appendices to the Convention on International Trade in Endangered Species in Wild Fauna and Flora; comments by 8-20-80

41326 6-18-80 / Proposal to determine Spiranthes Parksii (Navasota Ladies'-Tresses) To be an endangered species; comments by 8-18-80

46465 7-10-80 / Scientific authority procedures under the Convention on International Trade in Endangered Species of Wild Fauna and Flora; preliminary notice of 1980-81 export findings for certain Appendix II species; comments by 8-18-80

Indian Affairs Bureau—

47869 7-17-80 / Attorney contracts with Indian tribes; comments by 8-18-80

47869 7-17-80 / Recognition of attorney and agents to represent claimants; comments by 8-18-80

Land Management Bureau—

41860 6-20-80 / Public lands; exchanges; comments by 8-19-80

Surface Mining Reclamation and Enforcement Office—

48129 7-18-80 / Disposal of excess spoils and durable rock fills; comment by 8-18-80

INTERNATIONAL COMMUNICATION AGENCY

49103 7-23-80 / Appointment of foreign service personnel; comments by 8-22-80

INTERSTATE COMMERCE COMMISSION

48792 7-21-80 / Appellate procedures governing Commission's handling of non-rail proceedings; (interim rules); comments by 8-20-80

48676 7-21-80 / Cost standards for railroad rates; interpretation of statutory provisions; comments by 8-20-80

48796 7-21-80 / Policy statement on motor carrier pooling applications; comments by 8-20-80

JUSTICE DEPARTMENT

Attorney General—

41001 6-17-80 / Federal financial assistance; nondiscrimination on the basis of sex in education programs; comments by 8-18-80

Justice Assistance, Research, and Statistics Office—

40156 6-13-80 / Confidentiality of identifiable research and statistical information; comments by 8-20-80

40156 6-13-80 / Criminal intelligence systems operating policies; comments by 8-20-80

LABOR DEPARTMENT

Occupational Safety and Health Administration—

35298 5-23-80 / Provisions for access to employee exposure and medical records in agricultural employments; comments by 8-21-80

MANAGEMENT AND BUDGET OFFICE

43236 6-26-80 / Draft Federal Acquisition Regulation; contracts with Government employees or organizations owned or controlled by them, Component Breakout, and Value Engineering; comments by 8-22-80

NATIONAL AERONAUTICS AND SPACE ADMINISTRATION

48879 7-22-80 / Space transportation system; procurement of spinning solid upper stages; comments by 8-21-80

NATIONAL CREDIT UNION ADMINISTRATION

42628 6-25-80 / Share accounts and Share certificates; penalties for premature withdrawals; comments by 8-18-80

PERSONNEL MANAGEMENT OFFICE

40990 6-17-80 / Grade and pay retention; comments by 8-18-80

POSTAL RATE COMMISSION

48663 7-21-80 / Streamline of procedures for cases filed by the Postal Service as experiments under section 3623 of the Postal Reorganization Act; comments by 8-20-80

TRANSPORTATION DEPARTMENT
Coast Guard—
45327 7-3-80 / Unmanned barges carrying certain bulk dangerous cargoes; comments by 8-18-80
Federal Aviation Administration—
41596 6-19-80 / Operations review program; comments by 8-18-80
49290 7-24-80 / Recordation of conveyances affecting title to, or an interest in aircraft; comment period extended to 8-21-80
[*See also* 45 FR 34286, May 22, 1980]
TREASURY DEPARTMENT
Alcohol, Tobacco, and Firearms Bureau—
14069 3-4-80 / Recodification of wine regulations; comments by 8-20-80
[*See also* 44 FR 29691, 5-22-79 and 44 FR 53178, 9-13-79]
VETERANS ADMINISTRATION
41169 6-18-80 / Improving Government Regulations; Semiannual Agenda of Regulations; comments by 8-18-80
49297 7-24-80 / Veterans benefits; service records as evidence of service and character of discharge; comments by 8-22-80
41661 6-20-80 / Veterans education; ratio of Federally-supported to other students for flight courses; comments by 8-18-80

Next Week's Meetings

AGRICULTURE DEPARTMENT
Science and Education Administration—
50377 7-29-80 / Joint Council on Food and Agricultural Sciences Executive Committee, Washington, D.C. (open), 8-13-80
ARTS AND HUMANITIES, NATIONAL FOUNDATION
49199 7-23-80 / Humanities Panel, Washington, D.C. (closed), 8-11 through 8-13-80
CIVIL RIGHTS COMMISSION
49966 7-28-80 / Georgia Advisory Committee, Jekyll Island, Ga; (open), 8-15-80
49120 7-23-80 / Massachusetts Advisory Committee, Boston, Mass. (open), 8-8-80
[Originally published at 45 FR 47717, 7-16-80]
43817 6-30-80 / New Hampshire Advisory Committee, Manchester, N.H. (open), 8-12-80
49311 7-24-80 / South Carolina Advisory Committee, Columbia, S.C. (open), 8-13-80
COMMERCE DEPARTMENT
National Oceanic and Atmospheric Administration—
47179 7-14-80 / Caribbean Fishery Management Council, Scientific and Statistical Committee and Advisory Panel (open), 8-12 through 8-14-80
47179 7-14-80 / Mid-Atlantic Fishery Management Council, Essington, Pa. (open), 8-15-80
DEFENSE DEPARTMENT
Navy Department—
44979 7-2-80 / Chief of Naval Operations Executive Panel Advisory Committee, Washington, D.C. (closed), 8-12 and 8-13-80
46471 7-10-80 / Chief of Naval Operations Executive Panel Advisory Committee, Command, Control and Communications Subpanel, Alexandria, Va. (closed), 8-12 and 8-13-80
Office of the Secretary—
48937 7-22-80 / DOD Advisory Group on Electron Devices, Arlington, Va. (closed), 8-15-80
47903 7-17-80 / Defense Intelligence Agency Advisory Committee, Rosslyn, Va. (closed), 8-15-80
43458 6-27-80 / Defense Science Board, San Diego, Calif. (closed), 8-11 through 8-15-80
46151 7-9-80 / Electron Devices Advisory Group, Arlington, Va. (closed), 8-13 through 8-15-80
ECONOMIC OPPORTUNITY, NATIONAL ADVISORY COUNCIL
48999 7-22-80 / Meeting, Washington, D.C. (open), 8-15-80
EDUCATION DEPARTMENT
49323 7-24-80 / Bilingual Education National Advisory Council, Vail, Colo. (open), 8-14 and 8-15-80
48180 7-18-80 / Career Education National Advisory Council Bethesda, Md. (open), 8-16-80
47720 7-16-80 / Education of Disadvantaged Children, National Advisory Council, Washington, D.C.:
Impacts of Inflation on Title I Service Delivery, Committee, 8-12-80
Educationally Disadvantaged Children with Special Needs and Dual Eligibility Committee, 8-15-80
ENERGY DEPARTMENT
Federal Energy Regulatory Commission—
49591 7-25-80 / Small hydroelectric power projects with a proposed installed capacity of 5 megawatts or less, exemption from all or part of Part I of the Federal Power Act, Washington, D.C., 8-12-80
ENVIRONMENTAL PROTECTION AGENCY
49600 7-25-80 / FIFRA Scientific Advisory Panel, Arlington, Va., 8-13 through 8-15-80
FEDERAL EMERGENCY MANAGEMENT AGENCY
United States Fire Administration—
49356 7-24-80 / Board of Visitors for the National Fire Academy, Washington, D.C. (open), 8-12 and 8-13-80
FINE ARTS COMMISSION
64863 11-8-79 / Meeting, Washington, D.C. (open), 8-12-80
HEALTH AND HUMAN SERVICES DEPARTMENT
Food and Drug Administration—
49681 7-25-80 / Consumer exchange, Chicago, Ill. (open), 8-13-80
Health Resources Administration—
45374 7-3-80 / National Advisory Council on Health Professions Education, Bethesda, Md. (partially open), 8-11 through 8-13-80
National Institutes of Health—
47924 7-17-80 / Biometry and Epidemiology Contract Review Committee, Bethesda, Md. (partially open), 8-14 and 8-15-80
INTERIOR DEPARTMENT
Land Management Bureau—
47932 7-17-80 / Albuquerque District Advisory Council, Albuquerque, N. Mex. (open), 8-13-80
46912 7-11-80 / Federal-State Coal Advisory Board, Denver, Colo. (open), 8-12 and 8-13-80
47732 7-16-80 / Multiple Use Advisory Council, Moab, Utah (open), 8-14-80
INTERNATIONAL DEVELOPMENT COOPERATION AGENCY
Agency for International Development—
47539 7-15-80 / Board for International Food and Agricultural Development; Joint Committee for Agricultural Development, Washington, D.C. and Arlington, Va. (open), 8-11 and 8-12-80
47540 7-15-80 / Board for International Food and Agricultural Development; Joint Research Committee, Rosslyn, Va. (open), 8-12 and 8-13-80
NATIONAL AERONAUTICS AND SPACE ADMINISTRATION
49723 7-25-80 / NASA Advisory Council, Pasadena, Calif. (closed), 8-13 through 8-15-80
49723 7-25-80 / Space and Terrestrial Applications Steering Committee (STASC), Proposal Evaluation Advisory Committee, Greenbelt, Md. (closed), 8-12 through 8-14-80
NATIONAL SCIENCE FOUNDATION
47999 7-17-80 / Earth Sciences Advisory Committee, Geology Subcommittee, Golden, Colo. (closed), 8-14 and 8-15-80

UPPER MISSISSIPPI RIVER BASIN COMMISSION

50034 7-28-80 / 35th Quarterly meeting, Brainerd, Minnesota, 8-12 through 8-13-80

WAGE AND PRICE STABILITY COUNCIL

42364 6-24-80 / Price Advisory Council, Washington, D.C. (open), 8-13-80

Next Week's Public Hearings

AGRICULTURE DEPARTMENT

Agriculture Marketing Service—

47432 7-15-80 / Milk in the St. Louis-Ozarks and certain other marketing areas, Clayton, Mo., 8-12-80

CIVIL AERONAUTICS BOARD

45338 7-30-80 / Competitive marketing of air transportation, Washington, D.C., 8-12-80

ENERGY DEPARTMENT

Conservation and Solar Energy Office—

46075 7-9-80 / Energy conservation program for consumer products, Washington, D.C., 8-11 through 8-22-80 [Originally published at 45 FR 44086, 6-30-80]

Economic Regulatory Administration—

48568 7-18-80 / Gas Utility rate design proposals, Chicago, Ill., 8-13-80

46811 7-11-80 / Mandatory petroleum price regulations; equal application rule, Washington, D.C., 8-15-80 [Originally published at 45 FR 44238, 6-30-80]

45098 7-2-80 / Review and establishment of natural gas curtailment priorities, Washington, D.C., 8-12-80

INTERIOR DEPARTMENT

Surface Mining Reclamation and Enforcement Office—

47162 7-14-80 / Procedures for review of State Program Amendments, Washington, D.C., 8-14-80

LABOR DEPARTMENT

Mine Safety and Health Administration—

39310 6-10-80 / Respirable dust, Pittsburgh, Pa. and Lexington, Kentucky, 8-12-80 and Charleston, W.Va. and Denver, Colorado, 8-14-80

NUCLEAR REGULATORY COMMISSION

48007 7-17-80 / Metropolitan Edison Co. (Three Mile Island Nuclear Station, Unit No. 1), prehearing conference, Harrisburg, Pa., 8-12-80

TRANSPORTATION DEPARTMENT

Coast Guard—

46591 7-10-80 / Proposed highway bridge across the Steinhatchee River, Steinhatchee, Fla., 8-13-80

List of Public Laws

Last Listing Aug. 4, 1980

This is a continuing listing of public bills from the current session of Congress which have become Federal laws. The text of laws is not published in the Federal Register but may be ordered in individual pamphlet form (referred to as "slip laws") from the Superintendent of Documents, U.S. Government Printing Office, Washington, D.C. 20402 (telephone 202-275-3030).

S. 1466 Pub. L. 96-318 To provide for the distribution of certain funds appropriated to pay judgments in favor of the Delaware Tribe of Indians and the absentee Delaware Tribe of Western Oklahoma in Indian Claims Commission dockets 27-A and 241, 289, and 27-B and 338, and for other purposes. (Aug. 1, 1980; 94 Stat. 968) Price $1.

S. 2508 Pub. L. 96-319 To provide for the disposition of the Gila River Pima-Maricopa Indian Community judgment funds awarded in dockets 236-A, 236-B, and 236-E before the Indian Claims Commission and the United States Court of Claims, and for other purposes. (Aug. 1, 1980; 94 Stat. 972) Price $1

S. 2492 Pub. L. 96-320 Ocean Thermal Energy Conversion Act of 1980. (Aug. 3, 1980; 94 Stat. 974) Price $1.75

Documents Relating to Federal Grant Programs

This is a list of documents relating to Federal grant programs which were published in the Federal Register during the previous week.

RULES GOING INTO EFFECT

51484 8-1-80 / EPA—State and local assistance: grants for underground water source protection programs; effective 8-1-80

51209 8-1-80 / HHS/PHS—Grants for graduate programs in health administration; effective 8-1-80

51201 8-1-80 / HHS/PHS—Grants for residency training in general internal medicine or general pediatrics; effective 8-1-80

51205 8-1-80 / HHS/PHS—Grants to schools of medicine, osteopathy, dentistry, public health, veterinary medicine, optometry, pharmacy, and podiatry for support of their educational programs; effective 8-1-80

51516 8-1-80 / HUD/CPD—Community development block grants for Indian tribes and Alaskan natives, Housing Assistance Plan (HAP); effective 9-12-80

DEADLINES FOR COMMENTS ON PROPOSED RULES

50296 7-28-80 / CSA—Grantees, funding; community action agencies; program management system; republication; comments by 8-27-80

51243 8-1-80 / ED—Basic educational opportunity grant program; Family Contribution Schedules; comments by 9-30-80

51241 8-1-80 / HHS/PHS—Grants for various health manpower projects; comments by 9-30-80

APPLICATIONS DEADLINES

49967 7-28-80 / Commerce—NTIA/Satellite Teleconference on increasing participation of minorities and women in public telecommunications, grant proposal applications by 8-15-80

50622 7-30-80 / ED—Bilingual education and minority language affairs; applications to serve as field readers to evaluate grant applications for FY 1981 funding cycle by 10-31-80

50623 7-30-80 / ED—Mina Shaughnessy Scholars Program to improve postsecondary education; applications for awards by 10-17-80

51286 8-1-80 / HHS/CDC—Project grants—Health programs for refugees, emergency notice of availability of FY 1980 funds; notification of intent to apply by 8-15-80

MEETINGS

51318 8-1-80 / NFAH—Design Arts (Design Exploration/Research), Washington, D.C. (closed), 8-18 and 8-19-80

50687 7-30-80 / NSF—Policy Research and Analysis and Science Resources Studies Advisory Committee, Subcommittee on Output Indicators, Washington, D.C. (open), 8-19-80

OTHER ITEMS OF INTEREST

51490 8-1-80 / EPA—Women's business enterprise policy for the construction grants program; Final program requirements memorandum; effective 10-1-80

50524 7-29-80 / HHS/NIH—Recombinant DNA Research; actions under guidelines

49960 7-28-80 / HHS/PHS—Community Health Centers; Provisional Nature of Amounts of Initial Operation and Staffing, Conversion, and Financial Distress grants under Community Mental Health Centers Act; correction to proposed rule

51227 8-1-80 / HUD/Secretary—Community development block grants; Innovative grants program; transmittal of interim rule to Congress

51227 8-1-80 / HUD/Secretary—Community development block grants and urban development action grants; transmittal of interim rule to Congress

51303 8-1-80 / Labor/ETA—Intent to reallocate funds under Title II-D of the Comprehensive Employment and Training Act; comments by 9-2-80