8-15-80
Vol. 45 No. 160
Pages 54299-54710

federal register

Friday
August 15, 1980

Highlights

54299 **Overseas Private Investment Corporation Programs In PRC** Presidential determination

54471, 54472 **Grants—Training** Labor/ETA reallocates funds under Title II-D of the Comprehensive Employment and Training Act (3 documents)

54638, 54640 **Food Stamps** USDA/FNS publishes regulations regarding Food Stamp Workfare Demonstration Project; apply by 9-15-80, effective 5-26 and 8-15-80 (Part III of this issue) (2 documents)

54420 **Consumer Protection** EPA publishes notice regarding study of automating consumer complaint handling

54326 **Banks** FRS publishes regulations regarding bank holding company may form a subsidiary to perform services for its subsidiaries; effective 8-11-80

54694 **Gasoline** DOE/ERA proposes maximum lawful selling price for unleaded gasoline; comments by 10-14-80 (Part IX of this issue)

54708 **Nuclear Safety** NRC requests comments by 9-29-80 and announces workshops on functional criteria for emergency response facilities (2 documents) (Part XI of this issue)

CONTINUED INSIDE

Highlights

FEDERAL REGISTER Published daily, Monday through Friday, (not published on Saturdays, Sundays, or on official holidays), by the Office of the Federal Register, National Archives and Records Service, General Services Administration, Washington, D.C. 20408, under the Federal Register Act (49 Stat. 500, as amended; 44 U.S.C. Ch. 15) and the regulations of the Administrative Committee of the Federal Register (1 CFR Ch. I). Distribution is made only by the Superintendent of Documents, U.S. Government Printing Office, Washington, D.C. 20402.

The Federal Register provides a uniform system for making available to the public regulations and legal notices issued by Federal agencies. These include Presidential proclamations and Executive Orders and Federal agency documents having general applicability and legal effect; documents required to be published by Act of Congress and other Federal agency documents of public interest. Documents are on file for public inspection in the Office of the Federal Register the day before they are published, unless earlier filing is requested by the issuing agency.

The Federal Register will be furnished by mail to subscribers, free of postage, for $75.00 per year, or $45.00 for six months, payable in advance. The charge for individual copies is $1.00 for each issue, or $1.00 for each group of pages as actually bound. Remit check or money order, made payable to the Superintendent of Documents, U.S. Government Printing Office, Washington, D.C. 20402.

There are no restrictions on the republication of material appearing in the Federal Register.

Questions and requests for specific information may be directed to the telephone numbers listed under INFORMATION AND ASSISTANCE in the READER AIDS section of this issue.

54403 **Fuel** DOE/ERA gives notice of requirement of development and submission of annual fuel substitution plans by Federal agencies

54662 **Petroleum** DOE/ERA proposes amendments to Mandatory Petroleum Allocation Regulations; comments by 9–15–80 (Part VI of this issue)

54355 **Health and Safety** Labor/OSHA proposes basic program elements for Federal employee occupational safety and health programs; comments by 9–15–80

54326 **Banks and Banking** FDIC publishes regulations delegating authority to suspend time deposit withdrawal penalties for disaster areas; effective 8–15–80

54702 **Advertising** FTC announces 9–29–80 effective date of final rule concerning labeling and advertising of home insulation (Part X of this issue)

54329 **Prescription Drugs** Justice/DEA publishes regulations modifying procedure for partial filling of prescriptions for Schedule II controlled substances; effective 9–15–80

54688 **Petroleum** DOE/ERA proposes several changes to the Tertiary Incentive Program; comments by 10–10–80 (Part VIII of this issue)

54307 **Freedom of Information** USDA/FSQS establishes procedures for obtaining Food Safety and Quality Service (FSQS) records under the Freedom of Information Act; effective 8–15–80

54656 **Mines** Labor/MSHA proposes identifying mines which have a pattern of violations of mandatory health or safety standards; comments by 10–14–80 (Part V of this issue)

Privacy Act Document

54396 DOD/DIS
54444 HHS/PHS

54516 **Sunshine Act Meetings**

Separate Parts of this Issue

54578 **Part II, Labor/ESA**
54638 **Part III, USDA/FNS**
54642 **Part IV, EPA**
54656 **Part V, Labor/MSHA**
54662 **Part VI, DOE/ERA**
54678 **Part VII, Interior/FWS**
54688 **Part VIII, DOE/ERA**
54694 **Part IX, DOE/ERA**
54702 **Part X, FTC**
54708 **Part XI, NRC**

Contents

Federal Register
Vol. 45, No. 160
Friday, August 15, 1980

The President
ADMINISTRATIVE ORDERS
54299 Overseas Private Investment Corporation programs in PRC (Presidential Determination No. 80-25 of Aug. 8, 1980)

Executive Agencies

Agricultural Marketing Services
RULES
54304 Lemons grown in Ariz. and Calif.
54305 Peaches grown in Colo.

Agriculture Department
See Agricultural Marketing Service; Animal and Plant Health Inspection Service; Commodity Credit Corporation; Federal Crop Insurance Corporation; Food and Nutrition Service; Food Safety and Quality Service; Foreign Agricultural Service; Forest Service; Rural Electrification Administration.

Animal and Plant Health Inspection Service
RULES
Plant pest regulations:
54302 Mediterranean fruit fly

Arms Control and Disarmament Agency
NOTICES
54388 Senior Executive Service Performance Review Board; membership

Blind and Other Severely Handicapped, Committee for Purchase From
NOTICES
54392, 54393 Procurement list, 1980; additions and deletions (2 documents)

Civil Aeronautics Board
NOTICES
Hearings, etc.:
54388 Pan American World Airways, Inc., et al., enforcement proceeding

Civil Rights Commission
NOTICES
54388 Administration of justice, role of Federal Government; hearing

Commerce Department
See International Trade Administration; National Oceanic and Atmospheric Administration.

Commodity Credit Corporation
RULES
Loan and purchase programs:
54305 Rice
PROPOSED RULES
Loan and purchase programs:
54347 Sugar beets and sugarcane

Commodity Futures Trading Commission
NOTICES
Self-regulatory organizations; proposed rule changes:
54393 Chicago Board of Trade; plywood contract

Defense Department
See also Engineers Corps.
NOTICES
54396 Privacy Act; systems of records

Drug Enforcement Administration
RULES
Prescriptions:
54329 Schedule II controlled substances; partial filling of prescriptions for patients in long term care facilities

Economic Regulatory Administration
RULES
Motor gasoline; State recommendations to increase retail price margin:
54325 Oregon
PROPOSED RULES
Petroleum allocation and price regulations:
54662 Crude oil for Strategic Petroleum Reserve (SPR) by exchange of Naval Petroleum Reserves (NPR) etc.
54694 Gasoline, unleaded; maximum lawful selling price; hearing
54688 Tertiary incentive program
NOTICES
Consent orders:
54412 Hawn Brothers
54414 Payne Inc.
54403 Fuel substitution plans, annual; development and submission requirements for Federal agencies
Powerplant and industrial fuel use; prohibition orders, exemption requests, etc.:
54409, 54411 Consolidated Edison Co. (2 documents)
54408 Hooker Chemicals & Plastics Corp.
54413 Orange & Rockland Utilities, Inc.
54405 Shell Oil Co.

Employment and Training Administration
NOTICES
Comprehensive Employment and Training Act programs:
54471, 54472 Reallocation of funds; prime sponsors (3 documents)
54472 Wage adjustment index 1981 FY; correction

Employment Standards Administration
NOTICES
54578 Minimum wages for Federal and federally-assisted construction; general wage determination decisions, modifications, and supersedeas decisions (Calif., Conn., Fla., Ga., Ill., Iowa, Kans., Ky., Maine, Mich., N.H., N.Y., Ohio, Pa., R.I., Tenn., Va., and Wis.)

Energy Department
See also Economic Regulatory Administration; Federal Energy Regulatory Commission; Hearings and Appeals Office, Energy Department.
NOTICES
Environmental statements; availability, etc.:
54399 Near-term acquisition of away-from-reactor (AFR) spent fuel storage facilities
International atomic energy agreements; civil uses; subsequent arrangements:
54405 Canada
54405 Japan
54404 Korea
Meetings:
54404 National Petroleum Council
Procurement:
54404 Contract awards, proposed; Systems Control, Inc.

Engineers Corps
NOTICES
Environmental statements; availability, etc.:
54395 Carlyle Lake and Lake Shelbyville, Ill.

Environmental Protection Agency
RULES
Air quality implementation plans; approval and promulgation; various States, etc.:
54336 Arkansas
54336 New Hampshire
Pesticide chemical in or on raw agricultural commodities; tolerances and exemptions, etc.:
54340 Oxamyl
Pesticide programs:
54337 Books and records of pesticide production and distribution
PROPOSED RULES
Air pollution; standards of performance for new stationary sources:
54385 Opacity of emissions determination remotely by lidar; extension of time
Air quality implementation plans; approval and promulgation; various States, etc.:
54372 New York
Toxic substances:
54642 Premanufacture review program; processing of exempt substances for commercial purposes; notification requirement
NOTICES
54420 Consumer program; automating complaint handling feasibility study
Environmental statements; availability, etc.:
54436 Agency statements; weekly receipts
Pesticides; experimental use permit applications:
54427 Mobay Chemical Corp.
54435 Rohm & Haas Co.
54427 Water and Power Resources Service et al.
Pesticides; temporary tolerances:
54428 Great Western Sugar Co.
54436 Herculite Products, Inc.
Pesticides; tolerances in animal feed and human food:
54428 Mobay Chemical Corp.
54426 Pennwalt Corp. et al.
54436 Rohm & Haas Co.
Toxic and hazardous substances control:
54420, 54422, 54423, 54425 Premanufacture notices receipts (4 documents)
Water pollution; discharge of pollutants (NPDES):
54428 Gulf of Mexico

Federal Communications Commission
RULES
Common carrier services:
54341 Telephone network; connection of equipment systems, and protection apparatus to private line services; correction

Federal Contract Compliance Programs Office
NOTICES
Contract sanctions:
54478 PFG & Sons Builders & Contractors, Inc.
54481 S.T.C. Construction Co.

Federal Crop Insurance Corporation
PROPOSED RULES
Crop insurance; various commodities:
54346 Oats

Federal Deposit Insurance Corporation
RULES
Authority delegations:
54326 Bank Supervision Division Director et al.; presidentially-declared disaster areas; time deposit withdrawal penalties waived
NOTICES
54516, 54517 Meetings; Sunshine Act (4 documents)

Federal Energy Regulatory Commission
PROPOSED RULES
Natural Gas Policy Act of 1978:
54354 Curtailment plans; compensation provisions; withdrawal
NOTICES
54517 Meetings; Sunshine Act (2 documents)

Federal Home Loan Bank Board
NOTICES
54517 Meetings; Sunshine Act

Federal Maritime Commission
NOTICES
54439 Agreements filed, etc.
54517 Meetings; Sunshine Act

Federal Prevailing Rate Advisory Committee
NOTICES
54440 Meetings

Federal Reserve System
RULES
Bank holding companies (Regulation Y):
54326 Operations subsidiaries
NOTICES
54517 Meetings; Sunshine Act

Federal Trade Commission
RULES
54702 Home insulation, labeling and advertising; effective date and stay of effect of representative thickness testing and television advertising disclosure requirements

Fish and Wildlife Service
RULES
Endangered and threatened species:
54678 Leon Springs pupfish
Hunting:
54344 Cibola National Wildlife Refuge, Calif., et al.
PROPOSED RULES
Endangered and threatened species:
54682 Foreign reptiles; status review
54682 McKittrick Pennyroyal

Food and Drug Administration
RULES
Animal drugs, feeds, and related products:
54327 Chloramphenical oral solution
54329 Sterile benzathine penicillin G suspension
54328 Tylosin
PROPOSED RULES
Human drugs:
54354 Anorectal products (OTC); monograph establishment; correction
54354 Stomach acidifier products (OTC); correction
NOTICES
Medical devices:
54444 USCI Gruntzig Dilaca coronary artery balloon dilatation catheter; premarket approval; correction
Meetings:
54442, 54443 Advisory committees; panels, etc. (2 documents)

Food and Nutrition Service
RULES
Food stamp program:
54638 Workfare demonstration project; emergency rule
NOTICES
Child nutrition programs:
54386 Donated foods or cash in lieu of; national average minimum value (July 1, 1980–June 30, 1981)
Food stamp program:
54640 Workfare demonstration project; application period reopened

Food Safety and Quality Service
RULES
54307 Freedom of Information Act; implementation
Meat and poultry inspection, mandatory:
54310 Voluntary plant quality control systems

Foreign Agricultural Service
RULES
Import quotas and fees:
54301 Dairy products; "pricebreak" system elimination, quota shares

Forest Service
NOTICES
Environmental statements; availability, etc.:
54386 Los Padres National Forest, uranium prospecting, Calif.

General Accounting Office
NOTICES
54441 Regulatory reports review; proposals, approvals, violations, etc. (FCC, FMC)

Health, Education, and Welfare Department
See Health and Human Services Department

Health and Human Services Department
See Food and Drug Administration; Public Health Service.

Hearings and Appeals Office, Energy Department
NOTICES
Applications for exception:
54414, 54418 Decisions and orders (2 documents)
Remedial orders:
54417 Objections filed

Heritage Conservation and Recreation Service
RULES
Urban park and recreation recovery:
54334 Local recovery action programs; uniform preparation criteria; extension of time

Housing and Urban Development Department
RULES
Low income housing:
54330 Fair market rent schedules for existing housing and mobile home spaces (Sections 8 and 23); correction

Immigration and Naturalization Service
RULES
Transportation line contracts:
54310 Evergreen International Airlines, Inc.

Indian Affairs Bureau
RULES
Irrigation projects; operation and maintenance charges:
54331 Colorado River, Ariz.

Interior Department
See also Fish and Wildlife Service; Heritage Conservation and Recreation Service; Indian Affairs Bureau; Land Management Bureau; Surface Mining Office; Water and Power Resources Service.
NOTICES
54452 Arizona; Central Arizona Project, proposed water allocations to Indian tribes; hearings

International Trade Administration
NOTICES
Antidumping:
54388 Racing plates (aluminum horseshoes) from Canada
Meetings:
54391 Importers and Retailers' Textile Advisory Committee
54391 Management-Labor Textile Advisory Committee
Scientific articles; duty free entry:
54389 University of California et al.

Interstate Commerce Commission
RULES
Railroad car service orders; various companies:
54344 Indiana Interstate Railway Co., Inc.
PROPOSED RULES
Rail carriers:
54385 Railroad contract rates; standards, procedures, and exemptions; extension of time
NOTICES
54457 Hearing assignments

54458 Long and short haul applications for relief (2 documents)
Motor carriers:
54453, 54459, 54467 Finance applications (3 documents)
54461, 54466 Intercorporate hauling operations, intent to engage in (2 documents)
54453 Permanent authority applications; correction
Railroad car service orders; various companies:
54471 Chicago, Rock Island & Pacific Railroad Co.
54456, 54471 Railroad car service rules, mandatory; exemptions (4 documents)
Railroad operation, acquisition, construction, etc.:
54470 Oklahoma, Kansas & Texas Railroad Co.
Railroad services abandonment:
54453 Chicago & North Western Transportation Co.
54470 Norfolk & Western Railway Co.
Rerouting of traffic:
54470 All railroads

Justice Department
See Drug Enforcement Administration; Immigration and Naturalization Service.

Labor Department
See also Employment and Training Administration; Employment Standards Administration; Federal Contract Compliance Programs Office; Mine Safety and Health Administration; Occupational Safety and Health Administration; Pension and Welfare Benefit Programs Office.
NOTICES
Adjustment assistance:
54487 American Motors Sales Corp. et al.
54489 Brown Shoe Co.
54490 General Motors Corp.
54489 Homer Laughlin China Co.
54491 Mogadore Patterns Inc.
54490 Phoenix Forging Co.

Land Management Bureau
NOTICES
Environmental statements; availability, etc.:
54451 Royal Gorge Resource Area, Colo.; grazing management
Meetings:
54448 Coos Bay District Multiple Use Advisory Council
54450 Montrose District Grazing Advisory Board
54451 Socorro District Grazing Advisory Board
Motor vehicles, off-road, etc.; area closures:
54449 Arizona
54450 California
Withdrawal and reservation of lands, proposed, etc.:
54450 Idaho

Legal Services Corporation
NOTICES
54518 Meetings; Sunshine Act

Merit Systems Protection Board
NOTICES
54491 Disciplinary cases based on off-duty misconduct; filing of amicus briefs; extension of time

Mine Safety and Health Administration
PROPOSED RULES
54656 Mandatory health or safety standards; pattern of violations; identification criteria
NOTICES
Environmental statements; availability, etc.:
54478 Dallas Pike Area, Ohio County, W.Va.; construction and operation of expanded approval and certification center
Petitions for mandatory safety standard modifications:
54473 Carey Salt
54473 Consolidation Coal Co.
54474, 54476 Domtar Industries, Inc. (6 documents)
54473, 54477 Homestake Mining Co. (2 documents)
54477 Jim Walter Resources, Inc., et al.

National Oceanic and Atmospheric Administration
NOTICES
Meetings:
54391 Gulf of Mexico Fishery Management Council

National Science Foundation
NOTICES
Meetings:
54493 Advisory Council (2 documents)
54491 Astronomy Advisory Committee
54491 Information Science and Technology Advisory Committee
54492 Ocean Sciences Advisory Committee (3 documents)
54492 Policy Research and Analysis Advisory Committee

Nuclear Regulatory Commission
PROPOSED RULES
Production and utilization facilities, domestic licensing:
54708 Emergency response facilities functional criteria; inquiry and workshops (2 documents)
NOTICES
Applications, etc.:
54494 Baltimore Gas & Electric Co.
54493, 54495 Duke Power Co. (2 documents)
54493, 54495 Metropolitan Edison Co. et al. (2 documents)
54494 Regulatory guides; issuance and availability

Occupational Safety and Health Administration
RULES
Health and safety standards:
54333 Employee exposure and medical records, access; corrections
State plans; development and enforcement, etc.:
54334 Puerto Rico
PROPOSED RULES
54355 Federal employee safety and health programs

Pension and Welfare Benefit Programs Office
PROPOSED RULES
Employee benefit plans:
54370 Individual benefit reporting and recordkeeping for single employer plans; correction (2 documents)

NOTICES
Employee benefit plans:
54485, 54486 Prohibition on transactions; exemption proceedings, applications, hearings, etc. (2 documents)

Public Health Service
NOTICES
54444 Privacy Act; systems of records

Rural Electrification Administration
RULES
Electric borrowers:
54307 High-voltage transmission lines design manual (Bulletin 62-1)
Telephone borrowers:
54307 Subscriber carrier systems; relaxation of signal to noise ratio (Bulletin 345-66)
PROPOSED RULES
Telephone borrowers:
54354 Trunk and subscriber carrier systems; design specifications (Bulletin 385-4; forms 397b and 397c)
NOTICES
Environmental statements; availability, etc.:
54387 Eastern Iowa Power & Light Cooperative
54387 Seminole Electric Cooperative, Inc.
54386 Tri-State Generation & Transmission Association, Inc.

Securities and Exchange Commission
NOTICES
Hearings, etc.:
54510 Liberty Oil Corp.
54510 Panacolor, Inc.
54518 Meetings; Sunshine Act

Small Business Administration
NOTICES
Applications, etc.:
54510 Bando-McGlocklin Investment Co., Inc.
Meetings; advisory councils:
54510 North Carolina

Surface Mining Office
PROPOSED RULES
Permanent program submission; various States:
54371 Iowa
54371 Oklahoma
54372 Pennsylvania

Tennessee Valley Authority
NOTICES
54511 National Environmental Policy Act; implementation

Textile Agreements Implementation Committee
NOTICES
Cotton textiles
54392 Macau

Trade Representative, Office of United States
NOTICES
54496 Generalized System of Preferences; articles eligible for duty-free treatment; review of petitions

Water and Power Resources Service
NOTICES
Environmental statements; availability, etc.:
54452 Central Valley Project, Calif., et al.

MEETINGS ANNOUNCED IN THIS ISSUE

AGRICULTURE DEPARTMENT
Rural Electrification Administration—
54386 Tri-State Project, 9-15 through 9-18-80

COMMERCE DEPARTMENT
International Trade Administration—
54391 Importers and Retailers' Textile Advisory Committee, 9-3-80
54391 Management-Labor Textile Advisory Committee, 9-3-80
National Oceanic and Atmospheric Administration—
54391 Gulf of Mexico Fishery Management Council, 9-3-80

ENERGY DEPARTMENT
54404 Emergency Preparedness of the National Petroleum Council, Subcommittee, 9-8-80
Federal Prevailing Rate Advisory Committee Meetings, 9-4, 9-11, 9-18 and 9-25-80

HEALTH AND HUMAN SERVICES DEPARTMENT
Food and Drug Administration—
54443 Antimicrobial Panel, 9-21 and 9-22-80
Miscellaneous Internal Drug Products Panel, 9-28 and 9-29-80
54442 Neurological Device Section of the Respiratory and Nervous System Devices Panel, 9-26-80

INTERIOR DEPARTMENT
Bureau of Land Management—
54448 Coos Bay District Multiple Use Advisory Council, 9-18-80
54450 Montrose District Grazing Advisory Board, 9-16 and 9-17-80
54451 Socorro District Grazing Advisory Board, 9-11-80

NATIONAL SCIENCE FOUNDATION
54493 Astronomy Advisory Committee, 9-24 and 9-25-80
54491 Information Science and Technology Advisory Committee, 9-4 and 9-5-80
54492 Ocean Sciences Advisory Committee, 9-17 and 9-18-80
54492 Ocean Sciences Advisory Committee, 9-24 and 9-25-80
54492 Ocean Sciences Advisory Committee, 9-30 and 10-1-80
54492 Policy Research and Analysis Advisory Committee, Environment, Energy, and Resources Subcommittee, 9-5-80
54493 Steering Committee of the NSF Advisory Council, 9-3-80
54493 Task Group #9 of the NSF Advisory Council, 9-12-80

SMALL BUSINESS ADMINISTRATION
54510 Region IV (Charlotte, North Carolina) Advisory Council, 9-10 and 9-11-80

HEARINGS

CIVIL RIGHTS COMMISSION
54388 Federal Role in the Administration of Justice, 9-16-80

ENERGY DEPARTMENT
Economic Regulatory Administration—
54662 Crude oil for the strategic petroleum reserve by exchange of naval petroleum reserves crude oil, 8-27 and 9-4-80
54694 Maximum lawful selling price for unleaded gasoline, 9-5 and 9-11-80
54688 Tertiary Incentive Program, 9-16-80

ENVIRONMENTAL PROTECTION AGENCY
54428 Oil and Gas Operations in Portions of the Gulf of Mexico, 10-1 and 10-2-80

INTERIOR DEPARTMENT
Secretary Office—
54452 Allocations of water from the Central Arizona project to Indian tribes, 9-16, 9-17, and 9-18-80
Water and Power Resources Service—
54452 Draft environmental statement on the proposed reauthorization of the Central Valley Project, Calif., September dates

CONSUMER SUBJECT LISTING

The following items have been identified by the issuing agency as documents of particular consumer interest. This listing highlights the broad subject area of consumer interest followed by the specific subject matter of the document, issuing agency, and document category. For the page reference, please refer to the appropriate agency in today's table of contents.

HOME INSULATION
Labeling and advertising; Federal Trade Commission; Rules

CFR PARTS AFFECTED IN THIS ISSUE

A cumulative list of the parts affected this month can be found in the Reader Aids section at the end of this issue.

3 CFR
Administrative Orders:
Presidential Determinations:
No. 80-25 of August 8, 1980 54299

7 CFR
6 54301
282 54638
331 54302
910 54304
919 54305
1421 54305
1701 (2 documents) 54307
2890 54307
2891 54307
2892 54307
2893 54307
2894 54307
2895 54307
2896 54307
2897 54307
2898 54307
2899 54307
Proposed Rules:
427 54346
1435 54347
1701 54354

8 CFR
238 54310

9 CFR
318 54310
381 54310

10 CFR
212 54325
Proposed Rules:
50 (2 documents) 54708
211 54662
212 (2 documents) 54688, 54694

12 CFR
225 54326
303 54326

16 CFR
460 54702

18 CFR
Proposed Rules:
2 54354
154 54354

21 CFR
510 (2 documents) 54327, 54328
540 54329
555 54327
558 54328
1306 54329
Proposed Rules:
310 54354
346 54354

24 CFR
803 54330
888 54330

25 CFR
231 54331

29 CFR
1910 54333
1913 54333
1952 54334
Proposed Rules:
1960 54355
2520 (2 documents) 54370
2530 (2 documents) 54370

30 CFR
Proposed Rules:
Ch. VII (3 documents) 54371, 54372
104 54656

36 CFR
1228 54334

40 CFR
52 (2 documents) 54336
169 54337
180 54340
Proposed Rules:
52 54372
60 54385
720 54642

47 CFR
68 54341

49 CFR
1033 54344
Proposed Rules:
1039 54385

50 CFR
17 54678
32 54344
Proposed Rules:
17 (2 documents) 54682, 54685

Federal Register
Vol. 45, No. 160
Friday, August 15, 1980

Presidential Documents

Title 3—

The President

Presidential Determination No. 80-25 of August 8, 1980

Determination Under Subsection 239(g) of the Foreign Assistance Act of 1961, as Amended—People's Republic of China

Memorandum for the Secretary of State, the President of the Overseas Private Investment Corporation

Pursuant to subsection 239(g) of the Foreign Assistance Act of 1961, as amended, I determine that the operation of the programs of the Overseas Private Investment Corporation in the People's Republic of China is important to the national interest.

This Determination shall be published in the Federal Register.

Jimmy Carter

THE WHITE HOUSE,
Washington, August 8, 1980.

[FR Doc. 80-24985
Filed 8-13-80; 4:11 pm]
Billing code 3195-01-M

Rules and Regulations

Federal Register
Vol. 45, No. 160
Friday, August 15, 1980

This section of the FEDERAL REGISTER contains regulatory documents having general applicability and legal effect, most of which are keyed to and codified in the Code of Federal Regulations, which is published under 50 titles pursuant to 44 U.S.C. 1510.
The Code of Federal Regulations is sold by the Superintendent of Documents. Prices of new books are listed in the first FEDERAL REGISTER issue of each month.

DEPARTMENT OF AGRICULTURE

Foreign Agricultural Service

7 CFR Part 6

Section 22 Import Quotas; Certain Dairy Products

AGENCY: Foreign Agricultural Service, USDA.

ACTION: Final rule.

SUMMARY: This rule amends Import Regulation I which governs the administration of an import licensing system for certain dairy products subject to quota under the authority of Section 22 of the Agricultural Adjustment Act of 1933, as amended. The amendments in this final rule will (1) elimate certain inconsistencies between Presidential Proclamation 4708 (December 11, 1979) and the regulation in its present form and (2) provide authority to grant nonhistorical licenses to certain persons who did not receive quota shares for Other Cheese, NSPF, from Canada as a result of the confusion surrounding the elimination of the "pricebreak" system.

EFFECTIVE DATE: August 16, 1980.

FOR FURTHER INFORMATION CONTACT: Carol M. Harvey, Head, Dairy and Import Group, Dairy, Livestock and Poultry Division, CP, FAS, Room 6624, South Building, Department of Agriculture, Washington, D.C. 20250 (202) 447-5270. The Final Impact Statement describing the options considered in developing this final rule and the impact of implementing each option is available on request from Carol M. Harvey.

SUPPLEMENTARY INFORMATION: This final action has been reviewed under USDA procedures established in Secretary's Memorandum 1955 to implement Executive Order 12044 and has been classified "not significant". Further, it has been determined by Rolland E. Anderson, Director, Dairy, Livestock and Poultry Division, FAS, that good cause exists for not postponing the effective date of these final rules until 30 days after publication in the Federal Register (5 U.S.C. 553). This situation exists because the first change made herein is simply for purposes of clarification and the second change requires immediate implementation if it is to provide importers affected with the opportunity to make importations during 1980. More specifically, since it will take several weeks before allocations can actually be made, if an additional month must elapse before the rule authorizing such allocations can take effect, it would be very near the end of the 1980 quota year.

With respect to the second change, it has been determined after review of the documents previously submitted by the concerned importers as specified in § 6.26(b)(5)(ii) of the proposed rule that the minimum base-period importation required for license eligibility shall be 5,000 pounds rather than the 10,000 pounds provided in the proposed rule.

The proposed rule amending Import Regulation I was published in the Federal Register on May 20, 1980. A 30-day public comment period ended on June 21, 1979. Written comments were received from only a few entities.

Discussion of Comments

Two comments dealt with the proposal to eliminate Canada from participation in the "Other Countries" category in Group III(a) of Appendix I. It was proposed that this be done by amending the definition of "Other Countries" in § 6.21(t) in order to bring it into line with Presidential Proclamation 4708. After considering both comments the Department has decided to finalize the proposal. It should be noted, however, that under the provisions of Section 6.30(a), Canada will not be excluded from being a source country under Group III(a) Appendix I in the event of a country of origin adjustment under that category.

Three comments were received concerning the proposal to authorize the allocation of nonhistorical quota shares to traditional importers of above pricebreak Other Cheese, NSPF, from Canada—one positive, two negative. The negative comments addressed the "fairness" of granting traditional importers of above pricebreak Other Cheese, NSPF, from Canada a nonhistorical license for 1980 from Appendix I.

In the judgment of the Department there are three reasons which suggest that this resolution is eminently fair. First, Revision 6 of Import Regulation I established an August 1–November 1 application period for licenses to import items during the year following the year in which application was made. Revision 6 remained in effect until December 21, 1979, the effective date for the present regulation found in Revision 7. Importers who imported exclusively above the pricebreak were not covered by Revision 6 and thus were not required to apply for a license to import until Revision 7 became effective, almost two months after the last day for the submission of applications for 1980 licenses to import items in Appendix I. Second, since these same importers had never before been exposed to the licensing system, they have no real knowledge of the fact that the proposed rules published in October were designed to bring them within the licensing system. And third even if an importer was aware of the license application period because of importations above as well as below the pricebreak, it would have been virtually impossible to know before the end of the application period that there would be no Appendix II quota for Other Cheese, NSPF, from Canada and that, therefore, as of 1980 such cheese could only be imported with a nonhistorical license. The first authoritative indication to this effect did not appear until Presidential Proclamation 4708 was published on December 13, 1979. As with Revision 7 of Import Regulation I, this occurred weeks after the last day for making application for 1980 licenses.

Importers of Other Cheese, NSPF, from Canada affected by the second change should take note of the fact that there will be a 30-day application period beginning August 16, 1980. All documents required (if not already submitted) under the provisions of § 6.26(b)(5)(i) for 1980 nonhistorical quota entitlement for Other Cheese, NSPF, from Canada must be postmarked no later than (31 days after publication in the Federal Register). Licenses will be issued as soon as possible after the end of this application period.

Accordingly 7 CFR, Part 6—Subpart Section 22 Import Quotas, § 6.21 and § 6.26 are amended as follows:

§ 6.21 [Amended]

1. Section 6.21(t) is amended by deleting the words "Appendix 1 or Appendix 2" and inserting in lieu thereof the words "part 3 of the Appendix to the Tariff Schedules of the United States."

§ 6.26 [Amended]

2. Section § 6.26(b) is amended by adding a new paragraph (5) to read as follows:

* * * * *

(b) * * *

(5) Notwithstanding any other provision of this regulation, a person who is not eligible for a historical license in excess of one percent of the total quota for an article in Group V of Appendix 1 from a country which has a Group V quota in Appendix 1, but has no such quota in Appendix 2, will be eligible to obtain a nonhistorical license to enter a quota share of such article, if such person (i) submits to the licensing authority (a) documents required under paragraph (b)(2)(i) and (ii) of § 6.25, and (b) documents indicating the importation of 5,000 pounds or more of such article free of quota during the period July 1, 1978 through June 30, 1979, and (ii) had submitted previously either (a) Customs forms 7501 and 7505, as requested by the Department on August 16, 1979 (44 FR 47969), or (b) an application for a historical quota share for an article in Group V of Appendix 1: *Provided*, That, the allocation of such nonhistorical quota shares will not reduce the size of the nonhistorical quota shares previously allocated for 1980. All submissions required under § 6.26(b)(5)(i) must be postmarked no later than (31 days after publication in the Federal Register) to be eligible for a 1980 nonhistorical quota share.

(Sec. 3, Pub.L. 80-897, 62 Stat. 1248, as amended (7 U.S.C. 624); Secs. 701, 703, Pub.L. 96-39, 93 Stat. 268, 272 (A.U.S.C. 1202 note); Part 3 of the Appendix to the Tariff Schedules of the United States (19 U.S.C. 1202))

Signed this 12 of August, 1980.

Thomas R. Saylor,

Acting Administrator.

[FR Doc. 80-24842 Filed 8-14-80; 8:45 am]

BILLING CODE 3410-10-M

Animal and Plant Health Inspection Service

7 CFR Part 331

Mediterranean Fruit Fly

AGENCY: Animal and Plant Health Inspection Service, USDA.

ACTION: Final rule.

SUMMARY: Pursuant to the Federal Plant Pest Act this document amends the Mediterranean fruit fly regulations by expanding the area listed as a regulated area in Santa Clara County in California; by allowing regulated articles originating in regulated areas in California to move to Hawaii from such regulated areas without a certificate or limited permit only if not moved through any nonregulated areas; by changing a methyl bromide treatment for avocado from 4 hours to 2½ hours; and by providing an ethylene dibromide treatment for Calamondin orange, kumquat, lime, and pomelo. These actions are necessary as emergency measures for the purpose of preventing the artificial spread of the Mediterranean fruit fly into noninfested areas of the United States, and for allowing the interstate movement of certain regulated articles under conditions that in most cases would not cause damage to the regulated articles and that would not cause the artificial spread of the Mediterranean fruit fly into noninfested areas of the United States.

DATE: Effective date of amendments August 15, 1980. Written comments concerning this final rule must be received on or before October 14, 1980.

ADDRESS: Written comments should be submitted to H. V. Autry, Regulatory Support Staff, Plant Protection and Quarantine, Animal and Plant Health Inspection Service, U.S. Department of Agriculture, Federal Building, 6505 Belcrest Road, Room 635, Hyattsville, MD 20782.

FOR FURTHER INFORMATION CONTACT: H. V. Autry, Chief Staff Officer, Regulatory Support Staff, Plant Protection and Quarantine, APHIS, USDA, Federal Building, 6505 Belcrest Road, Room 635, Hyattsville, MD 20782, (301) 436-8247.

SUPPLEMENTARY INFORMATION: This final action has been reviewed under procedures established in Secretary's Memorandum 1955 to implement Executive Order 12044, and has been classified as "significant." The emergency nature of this action warrants publication of this final action without completion of a Final Impact Statement. A Final Impact Statement will be developed after public comments have been received.

Harvey L. Ford, Deputy Administrator of the Animal and Plant Health Inspection Service for Plant Protection and Quarantine, has determined that an emergency situation exists which warrants publication without opportunity for a public comment period on this final action. Due to the possibility that Mediterranean fruit fly could be spread artificially to noninfested areas of the United States, situations exit requiring immediate action to better control the spread of this pest. Also, a situation exists requiring immediate action to allow the interstate movement of certain regulated articles under conditions that in most cases would not cause damage to the regulated articles and that would not cause the artificial spread of the Mediterranean fruit fly into noninfested areas of the United States.

Further, pursuant to the administrative procedure provisions in 5 U.S.C. 553, it is found upon good cause that notice and other public procedure with respect to this emergency final action are impracticable and contrary to the public interest; and good cause is found for making this emergency final action effective less than 30 days after publication of this document in the Federal Register. Comments have been solicited for 60 days after publication of this document, and this emergency final action will be scheduled for review so that a final document discussing comments received and any amendments required can be published in the Federal Register as soon as possible.

Written Comments

Interested persons are invited to submit written comments concerning the final rule. Comments should bear a reference to the date and page numbers of this issue of the Federal Register. All written comments made pursuant to this document will be made available for public inspection at the Federal Building, 6505 Belcrest Road, Room 635, Hyattsville, MD 20782, during regular hours of business, 8 a.m. to 4:30 p.m., Monday through Friday, except holidays, in a manner convenient to the public business (7 CFR 1.27(b)).

Background

The Mediterranean fruit fly, *Ceratitis capitata* Wiedeman, is one of the world's most destructive pests of numerous fruits and vegetables, especially citrus fruits. It can cause serious economic losses. Heavy infestations can cause complete loss of crops, and losses of 25 to 50 percent are not uncommon. Its short life cycle permits the rapid development of serious outbreaks.

Because of infestations of the Mediterranean fruit fly found in California in areas in Los Angeles County and Santa Clara County, emergency Mediterranean fruit fly regulations were published in the

Federal Register on July 29, 1980 (45 FR 50318–50324) and became effective on that date. For the reasons explained below it is necessary to amend these regulations on an emergency basis pursuant to sections 105 and 106 of the Federal Plant Pest Act (7 U.S.C. 150dd, 150ee).

Santa Clara County

For the purpose of preventing the artificial spread of the Mediterranean fruit fly to noninfested areas in the United States, the regulations restrict the interstate movement from the regulated areas in Los Angeles County and Santa Clara County in California of articles designated as regulated articles.

Based on trapping surveys conducted by inspectors of the U.S. Department of Agriculture and State agencies of California, it has now been determined that the Mediterranean fruit fly has spread beyond the outer perimeter of the area in Santa Clara County previously designated as a regulated area. Therefore, in order to prevent the further spread of the Mediterranean fruit fly it is necessary as an emergency measure to amend § 331.1–2(c) of the regulations (7 CFR 331.1–2(c)) to expand the regulated area in Santa Clara County to cover the following area in which the Mediterranean fruit fly now occurs:

That portion of Santa Clara County bounded by a line beginning at a point where State Highway 237 intersects Interstate 680, the southerly on Interstate 680 to its intersection with U.S. Highway 101, then southerly on U.S. Highway 101 to its intersection with Capitol Expressway (G–21), then westerly on Capitol Expressway (G–21) to its intersection with Almaden Expressway (G–8), then southerly on Almaden Expressway (G–8) to its intersection with Branham Lane, then southwesterly on Branham Lane to its intersection with Camden Avenue, then northwesterly on Camden Avenue to San Thomas Expressway (G–4), then northwesterly on San Thomas Expressway (G–4) to its intersection with Campbell Avenue, then westerly on Campbell Avenue to Prospect Road, then west on Prospect Road to its intersection with Stelling Road, then north on Stelling Road to its intersection with Stevens Creek Boulevard, then west on Stevens Creek Boulevard to its intersection with Foothill Boulevard, then north on Foothill Boulevard to Foothill Expressway, then north on Foothill Expressway to its intersection with Juniper Serra Freeway, then northwesterly on Juniper Serra Freeway to its intersection with El Monte Road, then northeasterly on El Monte Road to its intersection with Foothill Expressway, then northwesterly on Foothill Expressway to its intersection with San Antonio Road, then northerly on San Antonio Road to its intersection with U.S. Highway 101, then due north on an imaginary line from said intersection to San Mateo-Santa Clara County line, then easterly along the San Mateo-Santa Clara County line to the Alameda-Santa Clara County line, then easterly along the Alameda-Santa Clara County line to its intersection with an imaginary line projected due south to a point where Zanker Road and State Highway 237 intersect, then northeasterly on State Highway 237 to the point of beginning.

Movement to Hawaii

Prior to amendment by this document, the provisions in § 331.1–3 of the regulations (7 CFR 331.1–3) allowed a regulated article originating in a regulated area in a State to be moved interstate from such regulated area only if moved pursuant to a certificate or limited permit, or if moved to Hawaii without moving through any other State. Under the regulations a certificate or limited permit may be issued to allow the movement of a regulated article based on certain determinations necessary to establish the absence of a risk of spreading the pest to noninfested areas. It was intended to allow a regulated article originating in a regulated area to move to Hawaii without a certificate or limited permit because Hawaii is already infested with the Mediterranean fruit fly and it does not appear that the introduction of additional Mediterranean fruit flies would have any significant effect on the infestation in Hawaii. However, it was not intended that a regulated article originating in a regulated area be allowed to move without a certificate or limited permit from a regulated area to a nonregulated area as part of an interstate movement to Hawaii. This would present a significant risk of spread of the Mediterranean fruit fly from a regulated area to noninfested areas. In order to prevent this risk, it is necessary to amend § 331.1–3(b)(1) of the regulations on an emergency basis to allow regulated articles originating in a regulated area to move to Hawaii without a certificate or limited permit only if moved to Hawaii without moving through any nonregulated area.

Treatments

It is further necessary, based on emergency situations to amend § 331.1–9 of the regulations (7 CFR 331.1–9) which sets forth treatments for certain regulated articles. Under the regulations a regulated article would be eligible for interstate movement pursuant to a certificate if, among other things, it had been treated in accordance with § 331.1–9 of the regulations, and would be eligible for interstate movement pursuant to a limited permit if it were moving under certain conditions for such treatment.

It was specified in § 331.1–9(l) of the regulations that treatment for avocados shall include fumigation with methyl bromide at normal atmospheric pressure with 32 g/m³ for 4 hours at 21°C. (70°F.) or above. The 4 hour time period was in error and should have been a 2½ hour time period. Based on research, it has been determined that it is only necessary to fumigate avocados with such methyl bromide treatment for 2½ hours in order to destroy the pest. Therefore, the time period should be changed from 4 hours to 2½ hours. This change is necessary as an emergency measure in order to avoid possible damage to fruit caused by unnecessary treatment.

It was also specified in § 331.1–9(2) of the regulations that treatments for fruits of bitter melon, citrus citron, grapefruit, lemon, mandarin orange (tangerine), and orange shall be as follows:

"Fumigation with ethylene dibromide (EDB) at normal atmospheric pressure.

Dosage as follows:

Fruit load in chamber	Dosage of EDB in g/m³ for 2 hrs.	
	15.5°–20.5°C. (60°–69°F.)	21°C. or above (70°F. or above)
25 percent or less	10 g	8 g
More than 25 percent but less than 50 percent	12 g	10 g
50 percent or more	14 g	12 g

Required post-treatment aeration: Forced circulation in the fumigation chamber for ½ hour following treatment and then placed in a well ventilated area."

This treatment was specified for the listed fruits based on a finding that it would be adequate to destroy the Mediterranean fruit fly in most cases without damage to the fruit. It has now been determined that fruit of Calamondin orange, kumquat, lime, and pomelo should be added to the list in said § 331.1–9(2). Based on research, it appears that this treatment would also be adequate to destroy the pest, in most cases without damage to such fruits. These fruits should be added to the list on an emergency basis in order to relieve unnecessary restrictions and to allow the interstate movement of such fruits in those instances where the risk

of spreading the pest to noninfested areas can be eliminated.

Accordingly, the Mediterranean fruit fly regulations, which, as noted above, became effective on July 29, 1980, are amended as follows:

1. The description for the regulated area in Santa Clara County in California in § 331.1-2(c) of the regulations (7 CFR 331.1-2(c)) is amended to read as follows:

§ 331.1-2 Regulated areas.

* * * * *

(c) * * *

California

* * * * *

Santa Clara County. That portion of Santa Clara County bounded by a line beginning at a point where State Highway 237 intersects Interstate 680, then southerly on Interstate 680 to its intersection with U.S. Highway 101, then southerly on U.S. Highway 101 to its intersection with Capitol Expressway (G-21), then westerly on Capitol Expressway (G-21) to its intersection with Almaden Expressway (G-8), then southerly on Almaden Expressway (G-8) to its intersection with Branham Lane, then southwesterly on Branham Lane to its intersection with Camden Avenue, then northwesterly on Camden Avenue to San Thomas Expressway (G-4), then northwesterly on San Thomas Expressway (G-4) to its intersection with Campbell Avenue, then westerly on Campbell Avenue to Prospect Road, then west on Prospect Road to its intersection with Stelling Road, then north on Stelling Road to its intersection with Stevens Creek Boulevard, then west on Stevens Creek Boulevard to its intersection with Foothill Boulevard, then north on Foothill Boulevard to Foothill Expressway, then north on Foothill Expressway to its intersection with Juniper Serra Freeway, then northwesterly on Juniper Serra Freeway to its intersection with El Monte Road, then northeasterly on El Monte Road to its intersection with Foothill Expressway, then northwesterly on Foothill Expressway to its intersection with San Antonio Road, then northerly on San Antonio Road to its intersection with U.S. Highway 101, then due north on an imaginary line from said intersection to San Mateo-Santa Clara County line, then easterly along the San Mateo-Santa Clara County line to the Alameda-Santa Clara County line, then easterly along the Alameda-Santa Clara County line to its intersection with an imaginary line projected due south to a point where Zanker Road and State Highway 237 intersect, then northeasterly on State Highway 237 to the point of beginning.

§ 331.1-3 [Amended]

2. The words "nonregulated area" are inserted in lieu of the words "other State" in § 331.1-3(b)(1) of the regulations (7 CFR 331.1-3(b)(1);

§ 331.1-9 [Amended]

3. The reference to "4 hours" in § 331.1-9(a) of the regulations (7 CFR 331.1-9(1)) is changed to "2½ hours."

4. The list of fruits in § 331.1-9(b) of the regulations (7 CFR 331.1-9(2)) is amended to read as follows: "Bitter melon, Calamondin orange, citrus citron, grapefruit, kumquat, lemon, lime, mandarin orange (tangerine), orange, and pomelo."

(Sections 105 and 106, 71 Stat. 32 and 33; 7 U.S.C. 150dd, 150ee; 37 FR 28464, 28477, as amended; 38 FR 19141)

Done at Washington, D.C., this 12th day of August 1980.

Jerry C. Hill,

Deputy Assistant Secretary for Marketing and Transportation Services, U.S. Department of Agriculture.

[FR Doc. 80-24834 Filed 8-14-80; 8:45 am]
BILLING CODE 3410-34-M

Agricultural Marketing Service

7 CFR Part 910

[Lemon Reg. 265]

Lemons Grown in California and Arizona; Limitation of Handling

AGENCY: Agricultural Marketing Service, USDA.

ACTION: Final rule.

SUMMARY: This regulation establishes the quantity of fresh California-Arizona lemons that may be shipped to market during the period August 17-23, 1980. Such action is needed to provide for orderly marketing of fresh lemons for this period due to the marketing situation confronting the lemon industry.

EFFECTIVE DATE: August 17, 1980.

FOR FURTHER INFORMATION CONTACT: Malvin E. McGaha, 202-447-5975.

SUPPLEMENTARY INFORMATION: *Findings.* This regulation is issued under the marketing agreement, as amended, and Order No. 910, as amended (7 CFR Part 910), regulating the handling of lemons grown in California and Arizona. The agreement and order are effective under the Agricultural Marketing Agreement Act of 1937, as amended (7 U.S.C. 601-674). The action is based upon the recommendations and information submitted by the Lemon Administrative Committee, and upon other information. It is hereby found that this action will tend to effectuate the declared policy of the act.

This action is consistent with the marketing policy for 1979-80 which was designated significant under the procedures of Executive Order 12044. The marketing policy was recommended by the committee following discussion at a public meeting on July 8, 1980. A final impact analysis on the marketing policy is available from Malvin E. McGaha, Chief, Fruit Branch, F&V, AMS, USDA, Washington, D.C. 20250, telephone 202-447-5975.

The committee met again publicly on August 12, 1980, at Los Angeles, California, to consider the current and prospective conditions of supply and demand and recommended a quantity of lemons deemed advisable to be handled during the specified week. The committee reports the demand for lemons is easier.

It is further found that there is insufficient time between the date when information became available upon which this regulation is based and when the action must be taken to warrant a 60 day comment period as recommended in E.O. 12044, and that it is impracticable and contrary to the public interest to give preliminary notice, engage in public rulemaking, and postpone the effective date until 30 days after publication in the Federal Register (5 U.S.C. 553). It is necessary to effectuate the declared purposes of the act to make these regulatory provisions effective as specified, and handlers have been apprised of such provisions and the effective time.

§ 910.565 Lemon Regulation 265.

Order. (a) The quantity of lemons grown in California and Arizona which may be handled during the period August 17, 1980, through August 23, 1980, is established at 225,000 cartons.

(b) As used in this section, "handled" and "carton(s)" mean the same as defined in the marketing order.

(Secs. 1-19, 48 Stat. 31, as amended; (7 U.S.C. 601-674))

Dated: August 13, 1980.

Charles R. Brader,

Director, Fruit and Vegetable Division, Agricultural Marketing Service.

[FR Doc. 80-25079 Filed 8-14-80; 12:00 pm]
BILLING CODE 3410-02-M

7 CFR Part 919

Peaches Grown in Mesa County, Colo.; Expenses and Rate of Assessment

AGENCY: Agricultural Marketing Service, USDA.

ACTION: Final rule.

SUMMARY: This action authorizes expenses and a rate of assessment for the 1980–81 fiscal period, to be collected from handlers to support activities of the Administrative Committee which locally administers the Federal marketing order covering peaches grown in Colorado.

DATES: Effective July 1, 1980, through June 30, 1981.

FOR FURTHER INFORMATION CONTACT: Malvin E. McGaha, Chief, Fruit Branch, F&V, AMS, USDA, Washington, D.C. 20250, telephone 202–447–5975. The Final Impact Statement relative to this final rule is available upon request from the above named individual.

SUPPLEMENTARY INFORMATION: This final action has been reviewed under USDA procedures established in Secretary's Memorandum 1955 to implement Executive Order 12044, and has been classified "not significant." This final rule is issued under Marketing Order No. 919 (7 CFR Part 919), regulating the handling of peaches grown in Mesa County, Colorado. This program is effective under the Agricultural Marketing Agreement Act of 1937, as amended (7 U.S.C. 601–674). This action is based upon the recommendation and information submitted by the Administrative Committee established under this marketing order and upon other information. It is found that the expenses and rate of assessment, as hereafter provided, will tend to effectuate the declared policy of the act.

This action was recommended at a public meeting at which all present could state their views. There is insufficient time between the date when information became available upon which this final rule is based and when the action must be taken to warrant a 60–day comment period as recommended in E.O. 12044, and it is impracticable and contrary to the public interest to give preliminary notice, engage in public rulemaking, and postpone the effective date until 30 days after publication in the Federal Register (5 U.S.C. 553). This order requires that the rate of assessment for a particular fiscal year shall apply to all assessable peaches handled from the beginning of such year which began July 1, 1980. To enable the committee to meet fiscal obligations which are now accruing, approval of the expenses and assessment rate is necessary without delay. It is necessary to effectuate the declared purposes of the act to make these regulatory provisions effective as specified, and handlers have been apprised of such provisions and the effective time.

Therefore, new § 919.219 is added to read as follows (§ 919.219 expires June 30, 1981, and will not be published in the annual Code of Federal Regulations):

§ 919.219 Expenses and rate of assessment.

(a) Expenses that are reasonable and likely to be incurred by the Administrative Committee during the period July 1, 1980, through June 30, 1981, will amount to $1,000.

(b) The rate of assessment for said period payable by each handler in accordance with § 919.41 is fixed at $0.0133334 per cwt. of peaches.

(Secs. 1–19, 48 Stat. 31, as amended; 7 U.S.C. 601–674)

Dated: August 12, 1980.

Charles R. Brader,

Director, Fruit and Vegetable Division, Agricultural Marketing Service.

[FR Doc. 80-24812 Filed 8-14-80; 8:45 am]

BILLING CODE 3410-02-M

Commodity Credit Corporation

7 CFR Part 1421

[CCC Grain Price Support Regulations, 1980–Crop Rice Supplement]

1980—Crop Rice Loan and Purchase Program

AGENCY: Commodity Credit Corporation, USDA.

ACTION: Final rule.

SUMMARY: The purpose of this rule is to set forth the: (1) final loan and purchase availability dates, (2) maturity dates, (3) loan and purchase rates, (4) premiums and discounts, and (5) location differentials, under which Commodity Credit Corporation (CCC) will extend price support to producers on 1980–crop rice. This rule is needed to satisfy statutory requirements and will enable eligible rice producers to obtain loans and purchases on their eligible 1980–crop rice.

EFFECTIVE DATE: August 15, 1980.

ADDRESS: Price Support and Loan Division, ASCS, U.S. Department of Agriculture, 3750 South Building, P.O. Box 2415, Washington, D.C. 20013.

FOR FURTHER INFORMATION CONTACT: Thomas Fink, Grain, Oilseeds, Rice and Cotton Section, Price Support and Loan Division, ASCS, P.O. Box 2415 Washington, D.C. 20013, 202/447–7923. The Final Impact Statement describing the options considered in developing this final rule and the impact of implementing each option will be available upon request from George H. Schaefer, Production Adjustment Division, P.O. Box 2415, Washington, D.C. 20013.

SUPPLEMENTARY INFORMATION: This final action has been reviewed under USDA procedures established in Secretary's Memorandum 1955 to implement Executive Order 12044 and has been classified "not significant." Also for "improving USDA Regulations" (43 FR 50988), initiation of review of the regulations contained in 7 CFR 1421.325–.328 for need, currency, clarity, and effectiveness will be made within the next five years. The next review will take into consideration problems, issues, etc., which are experienced in program administration during the intervening period.

A notice of proposed rulemaking was published in the Federal Register on October 23, 1979, 44 FR 61047, stating that the Department of Agriculture proposed to make determinations and issue regulations relative to a loan and purchase program for the 1980 crop of rice. Such determinations included determining loan rates, premiums, and discounts for grades, classes, other qualities, location differentials and other provisions as may be needed to carry out the program. Interested persons were given until December 24, 1979, to submit recommendations, views, and comments. Twelve responses were received concerning the loan and purchases level rates. Three respondents stated that the announced 1980 target price and loan level would be satisfactory. Four responses indicated that the target price and loan and purchase rate should be higher, while four others proposed total discontinuance. One respondent recommended elimination of class and quality differentials.

The loan and purchase rate for 1980-corp rice is required by Section 101h(2) of the Agricultural Act of 1949, as amended, to bear the same ratio to the 1979 crop loan and purchase rate of $6.79 per hundredweight as the 1980 crop established price of $9.49 per hundredweight bears to the 1979 crops established price of $9.05 per hundredweight. The established price ratio is 1.0486 ($9.49 divided by $9.05). This ratio is applied to the 1979 crop loan and purchase rate of $6.79 per

hundredweight and equals to $7.12 per hundredweight.

The program title and number from the "Catalog of Federal Domestic Assistance" is Commodity loan and Purchases, 10.051. This action will not have a significant impact specifically on area and community development. Therefore, review as established by OMB circular A-95 was not used to assure that units of local government are informed of this action.

Final Rule

The General Regulations Governing Price Support for 1978 and Subsequent Crops, and any amendments thereto, and the 1978 and Subsequent Crops Rice Loan and Purchase Program Regulations, and any amendments thereto, in Part 1421, are further supplemented, as stated herein, for the 1980 crop of rice. Accordingly, the regulations in 7 CFR 1421.325 through 1421.328 and the title of the subpart are revised, as provided below, effective as to the 1980 crop of rice. The material previously appearing in these sections shall remain in full force and effect as to the crops to which it is applicable.

Subpart—1980 Crop Rice Loan and Purchase Program

Sec.
1421.325 Purpose.
1421.326 Availability.
1421.327 Maturity of loans.
1421.328 Loan and purchase rates and premiums and discounts.

Authority: Secs. 4 and 5. 62 Stat. 1070, as amended (15 U.S.C. 714 b and c); secs. 101(h), 401, 91 Stat 940, as amended (7 U.S.C. 1441(h) and 1421).

Subpart—1980 Crop Rice Loan and Purchase Program

§ 1421.325 Purpose.

This subpart contains additional program provisions which, together with the applicable provisions of the General Regulations Governing Price Support for 1978 and Subsequent Crops, as amended, and the 1978 and Subsequent Crops Rice Loan and Purchase Programs Regulations, as amended, apply to loans and purchases for 1980-crop rice.

§ 1421.326 Availability.

(a) *Loans.* Producers desiring to participate in the program through loans must request a loan on their 1980 crop of eligible rice on or before March 31, 1981.

(b) *Purchases.* Producers desiring to offer eligible rice not under loan for purchase must execute and deliver to the county ASCS office prior to April 30, 1981, a purchase agreement (Form CCC-614) indicating the approximate quantity of 1980-crop rice they will sell to CCC.

§ 1421.327 Maturity of Loans.

Loans mature on demand but not later than April 30, 1981.

§ 1421.328 Loan and purchase rates and premiums and discounts.

(a) *Farm storage loans.* The loan rate for farm storage rice shall be $7.12 per hundredweight for any class. The settlement rate shall be the applicable basis rate specified in paragraph (c) of this section, adjusted in accordance with the provisions of this section and §§ 1421.311 and 1421.22.

(b) *Warehouse storage loans and purchases.* The loan rate for rice stored modified-commingled and identity-preserved in an approved warehouse shall be the applicable basic rate specified in paragraph (c) of this section, adjusted as provided in paragraphs (e) and (f) of this section. The rate for loans on rice stored commingled in an approved warehouse and for settlement for modified-commingled and identity-preserved loans and purchases shall be the applicable basic rate specified in paragraph (c) of this section, adjusted in accordance with the provisions of this section and §§ 1421.311 and 1421.22.

(c) *Basic rates.* The basic rate per 100 pounds of rice shall be computed as follows: Multiply the milling yield (in pounds per hundredweight) of whole kernels by the applicable loan value for whole kernels (as shown in the table below according to class), and round the result to the nearest hundredth. Similarly, multiply the difference between the total milling yield and the whole kernels yield (in pounds per hundredweight) by the applicable loan value for broken rice and round the result to the nearest hundredth. Add the results (as rounded) of the two computations to obtain the basic loan and purchase rate per 100 pounds of rice and express such rate in dollars and cents.

Loan Rates for Whole Kernels and Broken Rice

[In cents per pound]

Rough rice class	Whole kernels	Broken rice
Long grains	12.76	4.25
Medium grains	11.01	4.25
Short grains	11.01	4.25

(d) *Premium.* The basic rate determined under paragraph (c) of this section shall be adjusted for Grade U.S. No. 1 by the following premiums:

	Cents per 100 lbs
Grade U.S. No. 1	8

(e) *Discounts.*—(1) *Grade.* The basic rate determined under paragraph (c) of this section shall be adjusted for grades below U.S No. 2 by the following discounts:

	Cents per 100 lbs
Grade U.S. No. 3	15
Grade U.S. No. 4	30
Grade U.S. No. 5	50

(2) *Smut damage.* The rate for rice evidencing smut damage shall be further adjusted by the following discounts:

Percent smut damage	Cents per 100 lbs
Trace	0
0.1 to 1.0	5
1.1 to 2.0	10
2.1 to 3.0	15
3.1 percent and over	25

(f) *Location differentials.* For rice produced in areas specified below, discounts for location (to adjust for transportation costs of moving rice to an area where competitive milling facilities are available) shall be applied to the basic rate determined under paragraph (c) of this section: *Provided, however,* That if such rice is transported and stored in a rice producing area where no location differential is applicable, no discount for location shall be applied.

Differential Table

[Dollars per hundredweight]

Production areas	Discount rice
State of Florida	3.23
States of North Carolina and South Carolina	3.25
Counties of Lafayette, Little River, and Miller, Ark.; Bowie, Tex.; McCurtain, Okla.; and Bossier Parish, La	1.33
Imperial County, Calif., and adjacent counties in Arizona and California	3.26
Counties of Marion, Pike, and St. Charles, Mo	2.26

(g) *Other.* Rice that (1) contains in excess of 14 percent moisture, (2) is weevily, (3) is musty, (4) is sour, shall not be eligible for loan. However, in the event that such rice is delivered in satisfaction of loan obligations to CCC, such rice will be discounted on the basis of the schedule of discounts as provided by the Kansas City Commodity office for settlement purposes. CCC will, from

time to time, adjust such discounts as CCC determines appropriate to reflect changes in market conditions. Producers may obtain schedules of such factors and discounts at county ASCS offices approximately one month prior to the loan maturity date.

Signed at Washington, D.C. on August 6, 1980.

Ray Fitzgerald,

Executive Vice President, Commodity Credit Corporation.

[FR Doc. 80-24809 Filed 8-14-80; 8:45 am]

BILLING CODE 3410-05-M

Rural Electrification Administration

7 CFR Part 1701

File With for Bulletin 345-66, REA Specification for Subscriber Carrier Systems, PE-64, to Slightly Relax the Signal to Noise Ratio Under Some Input Conditions

AGENCY: Rural Electrification Administration, USDA.

ACTION: Final rule.

SUMMARY: REA hereby amends Appendix A—REA Bulletins to issue a "File With" for REA Bulletin 345-66 to slightly relax the signal to noise ratio under some input conditions. REA maintains a continuing effort to provide the most cost effective service to rural America through the review of its specifications. This relaxation will not noticeably degrade service and will result in cost reductions for REA borrowers.

EFFECTIVE DATE: August 6, 1980.

FOR FURTHER INFORMATION CONTACT: C. F. Buster, Jr., Chief, Transmission Branch, Telecommunications Engineering and Standards Division, Rural Electrification Administration, Room 1367, South Building, U.S. Department of Agriculture, Washington, D.C. 20250, telephone (202) 447-3917. The Final Impact Statement describing the options considered in developing this rule and the impact of implementing each option is available on request from the above office.

SUPPLEMENTARY INFORMATION: Pursuant to the Rural Electrification Act, as amended (7 U.S.C. 901 et. seq.), REA hereby amends Appendix A to issue a "File With" for REA Bulletin 345-66, REA Specification for Subscriber Carrier Systems, PE-64, to permit an S/N ratio of 30dB with an input of 0 to -30dBm. This action has been reviewed under USDA procedures established in Secretary's Memorandum No. 1955 to implement Executive Order No. 12044 and has been classified not significant.

REA, in its effort to provide the best, most cost-effective telecommunications services possible to rural America has made a slight reduction in permissible signal to noise ratio for subscriber carrier systems when subjected to a limited range of input levels. This reduction will not noticeably degrade service while permitting cost reductions in the equipment involved.

Further, pursuant to the administrative procedure provisions in 5 U.S.C. 553, it is found upon good cause that notice and other public procedure with respect to this final action are impracticable and contrary to the public interest; and good cause is found for making this final action effective immediately.

Copies of the "File With" are available upon request from the address above.

Dated: August 6, 1980.

John H. Arnesen,

Assistant Administrator—Telephone.

[FR Doc. 80-24550 Filed 8-14-80; 8:45 am]

BILLING CODE 3410-15-M

7 CFR Part 1701

Public Information; Appendix A—REA Bulletins

AGENCY: Rural Electrification Administration, USDA.

ACTION: Final rule.

SUMMARY: REA hereby amends Appendix A—REA Bulletins, to provide for a revision of REA Bulletin 62-1, "Transmission Line Manual," and has renamed the bulletin "Design Manual for High Voltage Transmission Lines." Changes in the 1977 edition of the National Electrical Safety Code necessitated the revisions which now bring the bulletin into conformance.

EFFECTIVE DATE: August 8, 1980.

FOR FURTHER INFORMATION CONTACT: Lee A. Belfore, Chief, Transmission Standards Branch, Engineering Standards Division, Rural Electrification Administration, Room 1269-S, U.S. Department of Agriculture, Washington, D.C. 20250, telephone (202) 447-5117. The Final Impact Statement covering this publication is available on request from the above-named individual.

SUPPLEMENTARY INFORMATION: REA Bulletin 62-1, "Design Manual for High Voltage Transmission Lines," is revised pursuant to the Rural Electrification Act as amended (7 U.S.C. 901 et seq.).

This final action has been reviewed under USDA procedures established in Secretary's Memorandum 1955 to implement Executive Order 12044, "Improving Government Regulations," and has been classified "not significant."

The last formal revision of REA Bulletin 62-1 was dated September 1972. The number of significant changes in the 1977 edition of the National Electrical Safety Code necessitated this revision which brings the publication into conformance. Since no other documents exist to replace the bulletin, REA did not consider any other options than revision as it is necessary to keep standards up to date. A Notice of Proposed Rulemaking was published in the Federal Register on January 22, 1980, Volume 45, Number 15, pages 4358 and 4359. Comments received consisted of requests for copies of the draft.

Dated: August 8, 1980.

Joe S. Zoller,

Assistant Administrator—Electric.

[FR Doc. 80-24833 Filed 8-14-80; 8:45 am]

BILLING CODE 3410-15-M

Food Safety and Quality Service

7 CFR Parts 2890, 2891, 2892, 2893, 2894, 2895, 2896, 2897, 2898, 2899

Freedom of Information; Availability of Records to the Public

AGENCY: Food Safety and Quality Service, USDA.

ACTION: Final rule.

SUMMARY: This document establishes procedures for obtaining Food Safety and Quality Service (FSQS) records under the Freedom of Information Act (FOIA) in accordance with departmental regulations issued pursuant to the Act. The departmental regulations, as implemented by the regulations in this part, govern the availability of records of the FSQS. This document also reserves Parts 2891-2899 of Title 7 of the Code of Federal Regulations for further agency-wide administrative provisions.

EFFECTIVE DATE: August 15, 1980.

FOR FURTHER INFORMATION CONTACT: Linda A. Wood, Office of the Executive Secretariat, Policy and Program Planning Staff, Food Safety and Quality Service, U.S. Department of Agriculture, Washington, D.C. 20250, (202) 447-2109. The Final Impact Statement describing the options considered in developing this final rule and the impact of implementing each option is available on request from the above-named individual.

SUPPLEMENTARY INFORMATION:

Significance

This final action has been reviewed under USDA procedures established in

Secretary's Memorandum 1955 to implement Executive Order 12044, and has been classified "not significant."

Background

On February 22, 1980, the Department published in the Federal Register (45 FR 11815–11816) a proposed rule to establish procedures for obtaining Food Safety and Quality Service (FSQS) records under the Freedom of Information Act (FOIA), 5 U.S.C. 552, in accordance with departmental regulations issued pursuant to the Act.

The FOIA requires each Federal agency, upon receipt of a request for records from any person which (a) reasonably describes such records, and (b) is made in accordance with published rules stating procedures to be followed, to make the records promptly available, except to the extent that requested records or parts of them may be covered by one of the FOIA's nine exemptions. The Act further requires agencies to make available for public inspection and copying certain records, including final agency opinions, orders, statements of policy, administrative staff manuals and instructions to staff.

The Department has published regulations implementing the FOIA (7 CFR Part 1, Subpart A). In addition to setting out the rules under which the Department's records will be made available to the public, they also provide (7 CFR 1.4) that each agency of the Department shall promulgate regulations setting forth information concerning:

1. The location and hours of operation of the Agency's FOIA office;
2. The availability of indexes and supplements thereto of certain agency actions which have not been published in the Federal Register;
3. The title and mailing address of the agency official authorized to receive requests for records and to make determinations regarding whether to grant or deny requests;
4. The title and mailing address of the official of the agency who is authorized to receive appeals from denials of requests and to make determinations regarding whether to grant or deny such appeals; and
5. Fees charged for providing records pursuant to the FOIA.

Comments

The FSQS received four letters in response to the February 22, 1980, proposed rule—three letters from trade associations and one from an individual food processor. The letters included seven separate issues which are individually addressed below.

1. *Need for a single USDA FOIA request system.*

One comment suggested that a single USDA system for handling FOIA requests would be better since each Agency would end up with a different system and that would make it difficult for requesters to determine which agency has the information sought and what procedures to follow in making a request.

Under the current decentralized system for administration of the FOIA, each of the USDA agencies is required by Department regulations (7 CFR 1.4) to publish its own FOIA regulations for the purpose of informing the public how to obtain access to agency records. Any decision concerning changing the existing system by, for example, establishing a central receiving office for FOIA requests, must be made at the Department level and is not a matter which is appropriately addressed by agencies publishing their FOIA regulations in accordance with present Department requirements. Information concerning the functions of USDA agencies is available to interested persons from the USDA Government and Public Affairs Office. This information should assist individuals in determining where to send requests. There should be only slight variances in FOIA regulations among USDA agencies since all agency regulations incorporate by reference the Department's FOIA regulations.

2. *Fee schedule.*

A second comment suggested that a fee schedule for file searches should not be implemented since, at present, there is only a duplication charge of ten cents per page for providing copies of agency records.

The FOIA mandates that each Federal agency (Department) establish its own uniform fee schedule for processing FOIA requests to include both search fees and charges for duplication of material (5 U.S.C. 552(a)(4)(A)). The fee schedule mentioned at § 2890.6 of the proposed rule incorporates by reference the USDA fee schedule at 7 CFR Part 1, Subpart A, Appendix A, which went into effect Department-wide some years ago. Search fees are charged only when requested records cannot be located readily. Since these non-routine searches are rarely required in order to locate records, the typical FOIA request, when material provided exceeds 30 pages, involves the assessment of only a duplication fee of ten cents per page.

3. *Deleted information.*

A third comment suggested that § 2890.5(c) of the proposed rule, which discusses the deletion of information from a document released to a requester, should be changed to state that the requesting party will, in all such cases, be advised of the nature of the deleted information and the statutory grounds for the deletion.

Section 2890.8 of the proposed rule incorporates by reference the Departmental requirement that requesters be given the reasons for any denial of access to information (7 CFR 1.5). In addition, this agency's FOIA office has always made it a practice to explain the nature of withheld information, to give reasons for withholding, and to insert the number of the applicable exemption in the place of information which has been segregated and deleted from a requested document.

4. *Confidential information.*

A fourth comment suggested that § 2890.5(a)(3) of the proposed rule, which discussed discretionary releases of exempt material, should be changed to state that records which include trade secrets or confidential commercial information cannot be subject to discretionary release, and, further, that the firms whose business data has been requested will, in all cases, be consulted before a determination is made whether to disclose the data.

The Department regulations, which also govern releases of records by FSQS, already reflect the limitations on discretionary releases (7 CFR 1.11(b)). However, for the sake of clarity, the proposed rule will be changed to state that the coordinator or designee has the authority to "make discretionary releases of exempt records, except where disclosure is specifically prohibited be Executive Order, statute, or applicable regulations."

Concerning the matter of notifying and consulting with firms whose data has been requested, neither the law nor the Department regulations require that subjects of FOIA requests be notified, although the FOIA staff routinely contacts and consults with subject firms when a question arises concerning the nature or significance of any data. Statutory time constraints for responses, however, often make it impossible, particularly in cases involving the records of numerous companies, to consult with each subject company. In addition, such consultation is usually unnecessary for the purpose of making release determinations because the types of commercial data most often requested fall into categories concerning which there are already established FOIA positions (e.g., product formulations are routinely considered to be trade secrets and exempt from disclosure). For these reasons, § 2890.5(a)(3) will not be further changed to require consultation with firms or individuals who are the subjects of FOIA requests.

5. *Time limits for responses.*

A fifth comment suggested that the FOIA coordinator should not be permitted to extend the statutory 10-day time limit for responding to FOIA requests (§ 2890.5(a)(2) of the proposed rule); nor should the Administrator be permitted to extend the statutory 20-day time limit for responding to administrative appeals from denials of access to agency records (§ 2890.7(b)(1) of the proposed rule).

Extension of statutory time limits for responding to FOIA requests and appeals is authorized both by the Act and by implementing Department regulations (5 U.S.C. 552(a)(6)(B) and 7 CFR 1.4). This extension must be not more than 10 working days, which can be applied either at the initial level or at the administrative appeals level, or can be divided between initial and appellate reviews (7 CFR 1.8(c)). Title 7 CFR 1.8 sets out the unusual circumstances under which extensions of time are authorized.

6. *Waiver of fees.*

A sixth comment suggested that the agency should not be able to discretionarily reduce or waive search and/or duplication fees for groups claiming to be acting in the public interest in requesting access to agency records.

Both the FOIA and implementing Department regulations require the waiver of fees in the public interest (5 U.S.C. 552(a)(4)(A) and 7 CFR 1.10). Sections 2890.5(a)(4) and 2890.7(b)(3) merely implement 7 CFR 1.10 and 7 CFR, Part 1, Subpart A, Appendix A, which provide the circumstances under which documents may be furnished without charge or at a reduced charge.

7. *Request log.*

The final comment suggested that FSQS and other agencies should maintain a log which is open to the public indicating what requests have been received and from whom, the dates received, and the status of responses.

The keeping of a request log, although necessary for practical reasons, is not required by the FOIA nor by Department regulations, and the matter of log-keeping, therefore, need not be addressed in FOIA regulations. A synopsis of the request log maintained by the FSQS FOIA staff is prepared weekly. These synopses are available for review at any time by members of the public.

Options Considered. Since publication of agency FOIA regulations is required by the Freedom of Information Act and USDA regulations, there are no practical alternatives to implementing these regulations.

The following regulations are the FSQS's implementation of the Department's requirements under the provisions of the FOIA. Since the FSQS has not yet promulgated an agency-wide administrative provisions' section in the Code of Federal Regulations, this document will also reserve Parts 2891–2899 for further agency-wide use.

In consideration of the above, Parts 2890–2899 of 7 CFR are recodified under a new Subchapter F for agency-wide use. Parts 2891–2899 are reserved and Part 2890 is added to read as follows:

Subchapter F—Food Safety and Quality Service Administrative Provisions

Part

2890 Freedom of Information.
2891–2899 [Reserved.]

PART 2890—FREEDOM OF INFORMATION

Sec.

2890.1 Scope and purpose.
2890.2 Published materials.
2890.3 Index.
2890.4 Facilities for inspection and copying.
2890.5 Requests for records.
2890.6 Fee schedule.
2890.7 Appeals.
2890.8 Agency response to requests.

Authority: 5 U.S.C. 552; 42FR 35625, 35626, 35631.

§ 2890.1 Scope and purpose.

These regulations are issued pursuant to the Freedom of Information Act, as amended (5 U.S.C. 552), and in accordance with the directives of the Department of Agriculture regulations in Part 1, Subpart A, of this title. The availability of records of the Food Safety and Quality Service (FSQS), and the procedures by which the public may request such information, shall be governed by this Act and by these Department regulations as implemented and supplemented by the regulations in this part.

§ 2890.2 Published materials.

Rules and regulations of FSQS relating to its regulatory responsibilities are continuously published and made available to the public in the Federal Register, and codified in Chapter XXVIII, Title 7 and Chapter III, Title 9 of the Code of Federal Regulations. FSQS also issues numerous publications relating to agency programs which implement the laws listed in the Delegations of Authority, 7 CFR 2.15(a) of this title. Most of these publications are available free from the USDA Publications Division, Office of Governmental and Public Affairs, or at established rates from the Superintendent of Documents, U.S. Government Printing Office, Washington, D.C. 20402.

§ 2890.3 Index.

Pursuant to the regulations in 7 CFR 1.4(b), FSQS will maintain and make available for public inspection and copying an index providing information regarding the materials required to be published or made available under the Freedom of Information Act (5 U.S.C. 552(a)(2)). Quarterly publication of these indexes is unnecessary and impracticable, since the material is voluminous and does not change often enough to justify the expense of quarterly publication. The Agency shall provide copies of any index, upon request, at a cost not to exceed direct cost of duplication.

§ 2890.4 Facilities for inspection and copying.

Facilities for public inspection and copying of the material described in §§ 2890.2 and 2890.3 of this part will be provided by FSQS pursuant to 7 CFR 1.4(a) in a reading area, on business days between the hours of 8:15 a.m. and 4:45 p.m., upon request to the Freedom on Information Coordinator or designee at the following address:

Freedom of Information Act Coordinator (FOIA), Food Safety and Quality Service, U.S. Department of Agriculture, Washington, DC 20250.

Copies of such material may be obtained in person or by mail.

§ 2890.5 Requests for records.

(a) The FOIA Coordinator of FSQS or designee is authorized to receive requests and to exercise the authority under 7 CFR 1.4(c) to (1) make determinations to grant or deny such requests, (2) extend the 10-day deadline, (3) make discretionary releases of exempt records, except where disclosure is specifically prohibited by Executive Order, statute, or applicable regulations, and (4) make determinations regarding the charging of fees pursuant to the established schedule.

(b) Requests for FSQS records or information shall be made in writing in accordance with 7 CFR 1.3, and submitted to the FSQS Freedom of Information Act Coordinator at the following address:

Freedom of Information Act Coordinator (FOIA Request), Food Safety and Quality Service U.S. Department of Agriculture, Washington, DC 20250.

The submitter shall identify each record with reasonable specificity as prescribed in 7 CFR 1.3. Initial requests for records customarily released by FSQS may be made orally, but in certain instances, the Coordinator in his/her

discretion, may deem it necessary to require a written submission from the requester.

(c) In exercising his/her authority under 7 CFR 1.4(c) to grant and deny requests, the Coordinator or designee will comply with subsection (b) of the Freedom of Information Act (5 U.S.C. 552(b)), as amended, which requires that any reasonably segregable portion of a document shall be provided to a person requesting such document after deletion of any portions within the scope of the request for which an exemption is being claimed under the Act. Therefore, unless the disclosable and nondisclosable portions are so inextricably linked that it is not reasonably possible to separate them, the document will be released with the nondisclosable portions deleted. The Coordinator or designee may exercise discretion as limited by 7 CFR 1.11 to release the entire document, or to make only a minimum number of deletions.

§ 2890.6 Fee schedule.

Departmental regulations provide for a schedule of reasonable standard charges for document search and duplication. See 7 CFR 1.10. Fees to be charged are set forth in 7 CFR Part 1, Subpart A, Appendix A.

§ 2890.7 Appeals.

(a) If the request for information, or for a waiver of search and/or duplication fees is denied, in whole or in part, the Freedom of Information Act Coordinator or designee will set forth in the letter of response the grounds for any denial of access and offer the requesting party an opportunity to file an administrative appeal from the denial, pursuant to 7 CFR 1.3(e). The appeals should be filed in writing within 45 days of the date of denial (departmental regulations, 7 CFR 1.5(a)(3)) and should be addressed as follows:

Administrator, Food Safety and Quality Service, (FOIA Appeal), U.S. Department of Agriculture, Washington, DC 20250.

(b) The Administrator of FSQS is authorized under 7 CFR 1.4(d) to (1) extend the 20-day deadline, (2) make discretionary releases, and (3) make determinations regarding the charging of fees.

§ 2890.8 Agency response to requests.

(a) The response to Freedom of Information requests and appeals by the officials named in §§ 2890.5 and 2890.7 of this part shall be governed by and made in accordance with 7 CFR 1.5 and the regulations in this part.

(b) Requests for records and information may be submitted to field stations. The field station shall immediately notify the FOIA Coordinator or designee by telephone. Unless the FOIA Coordinator or designee orally authorizes a release of the requested records, the field station receiving the request shall transmit the request directly to the FOIA Coordinator for a response. For purposes of compliance with the statutory time limit, the request will be considered as having been received on the date of its arrival in the office of the Coordinator or designee.

(c) Any person whose request for records has been granted may inspect and copy such records (or copies) at the office listed in § 2890.4 of this part in accordance with the provisions of that section as well as § 2890.6, relating respectively to time and fees. Copies may also be obtained by mail.

PARTS 2891—2899 [RESERVED]

(5 U.S.C. 552; 42 FR 35625, 35626, 35631)

Done at Washington, D.C., on: August 7, 1980.

Donald L. Houston,

Administrator, Food Safety and Quality Service.

[FR Doc. 80-24813 Filed 8-14-80; 8:45 am]

BILLING CODE 3410-DM-M

DEPARTMENT OF JUSTICE

Immigration and Naturalization Service

8 CFR Part 238

Contracts With Transportation Lines; Evergreen International Airlines, Inc.

AGENCY: Immigration and Naturalization Service, Justice.

ACTION: Final rule.

SUMMARY: This amendment to the regulations of the Immigration and Naturalization Service adds a carrier to the list of transportation lines which have entered into agreement with the Commissioner of Immigration and Naturalization to guarantee the passage through the United States in immediate and continuous transit of aliens destined to foreign countries. This amendment is necessary because transportation lines which have signed such agreements are published in the Service's regulations.

FOR FURTHER INFORMATION CONTACT: Stanley J. Kieszkiel, Acting Instructions Officer, Immigration and Naturalization Service, 425 Eye Street, N.W., Washington, D.C. 20536. Telephone: (202) 633-3048.

EFFECTIVE DATE: July 22, 1980.

SUPPLEMENTARY INFORMATION: This amendment to 8 CFR 238.3 is published pursuant to section 552 of Title 5 of the United States Code (80 Stat. 383), as amended by Pub. L. 93-502 (88 Stat. 1561), and the authority contained in section 103 of the Immigration and Nationality Act (8 U.S.C. 1103), 28 CFR 0.105(b), and 8 CFR 2.1. Compliance with the provisions of section 553 of Title 5 of the United States Code as to notice of proposed rulemaking and delayed effective date is unnecessary because the amendment contained in this order adds a transportation line to the listing and is editorial in nature.

The Commissioner of Immigration and Naturalization Service entered into agreement with the following named carrier on the date indicated to guarantee the passage through the United States in immediate and continuous transit aliens destined to foreign countries under section 238(d) of the Immigration and Nationality Act and 8 CFR 238: Evergreen International Airlines, Inc. Effective date: July 22, 1980.

Accordingly, Chapter I of Title 8 of the Code of Federal Regulations is amended as follows:

PART 238—CONTRACTS WITH TRANSPORTATION LINES

§ 238.3 [Amended]

In § 238.3 *Aliens in immediate and continuous transit,* the listing of transportation lines in paragraph (b) *Signatory lines* is amended by adding in alphabetical sequence, "Evergreen International Airlines, Inc."

(Secs. 103 and 238(d), 8 U.S.C. 1103 and 1228 (d))

This amendment is effective July 22, 1980 as to Evergreen International Airlines, Inc.

Dated: August 11, 1980.

David Crosland,

Acting Commissioner of Immigration and Naturalization.

[FR Doc. 80-24674 Filed 8-14-80; 8:45 am]

BILLING CODE 4410-10-M

DEPARTMENT OF AGRICULTURE

Food Safety and Quality Service

9 CFR Parts 318 and 381

Voluntary Meat and Poultry Plant Quality Control Systems

AGENCY: Food Safety and Quality Service, USDA.

ACTION: Final rule.

SUMMARY: The Department is amending the Federal meat inspection regulations

and the poultry products inspection regulations to permit an official meat or poultry establishment to submit its plans for a total plant quality control system (QC) for evaluation by the Food Safety and Quality Service (FSQS). If the Administrator of FSQS deems the system to be adequate and to result in the preparation of meat and poultry products in conformity with requirements of the Federal Meat Inspection Act or the Poultry Products Inspection Act, he will approve the system. The rule also provides for the approval of a partial quality control program in connection with the preparation of individual products or processes, or in connection with part of an operation designed to meet a particular requirement, such as determination of net weight. Provisions are also included for the manufacturing and the test marketing of experimental products.

EFFECTIVE DATE: September 15, 1980.

FOR FURTHER INFORMATION CONTACT: Mr. Bill F. Dennis, Director, Processed Products Inspection Division, Meat and Poultry Inspection Program, Food Safety and Quality Service, U.S. Department of Agriculture, Washington, D.C. 20250, (202) 447-3840. The Final Impact Analysis describing the options considered in developing this final rule and the impact of implementing each option is available on request from the above-mentioned individual.

SUPPLEMENTARY INFORMATION:

Significance

This action has been reviewed under USDA procedures established in Secretary's Memorandum 1955 to implement Executive Order 12044, and has been classified "significant."

Background

The Proposal

On September 14, 1979, the Department published in the Federal Register (44 FR 53526-53534) a document proposing to permit an official meat or poultry establishment, which has voluntarily developed a total plant quality control system or partial quality control program, to submit its plans and information on such system or program to the Administrator of FSQS for approval. The closing date for receipt of comments was November 13, 1979. However, a notice was published in the Federal Register (44 FR 65403) on November 13, 1979, extending the closing date to December 13, 1979.

The proposal contained provisions for the (1) application for total plant quality control or partial plant quality control, (2) evaluation and approval of total plant quality control or partial plant quality control, (3) termination of approval of total plant quality control or partial plant quality control, and (4) use of a uniform QC logo or symbol on products produced in a plant with an approved QC system. Each of these parts of the proposal is discussed below:

(1) Application for total plant and partial plant quality control.

In order to inform the Department adequately of the establishment's proposed QC system and provide adequate assurances so that the system would function in accordance with the applicable statute and regulations, the proposed general requirements for making application for the Department's approval of a total plant QC system would include:

a. Submission of a letter from the owner or operator of the official establishment to the Administrator of FSQS for the public record stating:

(i) The company's basis and purpose for seeking approval of its QC system and willingness to adhere to the requirements of the system as approved by the Department.

(ii) That all the establishment's data, analyses, and other information generated by its QC system will be available to Department personnel at all times.

(iii) That plant QC personnel will have authority to halt production or shipment of product in cases where other corrective measures have been ineffective.

(iv) That the establishment owner, operator, or appropriate designee will be available for consultation regarding the plant's QC system any time Department personnel find it necessary.

b. If an establishment has one or more full-time persons with primary duties relating to the quality control system, the submission of an organizational chart indicating that such personnel ultimately report to an establishment official whose responsibilities are independent of and not predominantly production.

c. A list identifying those Parts and sections of the Federal meat inspection regulations and those Subparts and sections of the poultry products inspection regulations which are applicable to the operations of the establishment applying for approval of a QC system. This list shall also identify which QC system or part thereof will serve to maintain compliance with the applicable regulations.

d. Detailed information concerning the manner in which the QC system will function. Such information should include, but not necessarily be limited to, questions of raw material control, the critical check or control points, the nature and frequency of tests to be made, the nature of charts and other records that will be used, the nature of deficiencies the system is designed to identify and control, the process limits at which corrective action will be taken, and the nature of such corrective action.

The general requirements for making application for approval of a partial QC program would include the information specified in item (1)(d) immediately above.

(2) Evaluation and approval of total plant and partial plant quality control.

As proposed, the plant's application for approval of a total plant QC system or a partial QC program would be evaluated by the Administrator of FSQS. If it were to be determined by the Administrator that the total plant QC system or partial QC program would—if carried out as presented—result in finished products being in full compliance with all applicable rules and regulations, the Administrator would approve it and plans would be made for implementation. If the application were denied, the applicant would be informed of the basis for the denial and would be given an opportunity to reapply.

(3) Termination of approval of a total plant QC system or partial plant QC program.

The Administrator would terminate approval of a plant's QC system or program if the establishment is found to have distributed adulterated or misbranded product in commerce. In such cases, opportunity would be provided the plant owner or operator to present views to the Administrator within 30 days of the date of termination and a hearing would be afforded, upon request, in those instances where there is a conflict as to the facts. Termination would also occur if the establishment fails to correct problems in the QC system or program after notice has been given by the Administrator. Prior to such termination, opportunity would be provided the plant owner or operator to present views within 30 days of the date of notice, and a hearing would be afforded, upon request, in those instances where there is a conflict as to the facts.

After termination, an application and request for approval of the same or a modified total QC system would not be evaluated by the Department for at least 6 months from the termination date, or for at least 2 months from the termination date in the case of a partial QC program. All facts, data, and information generated during the 6-month period, or 2-month period in the case of a partial QC program, must be included in the new application.

especially such facts, data, and information showing that the problem causing the earlier termination has been rectified.

(4) Use of a uniform QC logo or symbol.

The proposal made a provision for use of a uniform QC logo or symbol as part of the product labeling. Companies utilizing an approved total plant QC system would be permitted to use this logo on the labeling of their product. Consumers would thereby be provided with a means of identifying products produced under an approved QC system.

The major objectives of the proposed rule were to:

1. Permit the Department's Meat and Poultry Inspection Program to take advantage and make use of newer technology and plant QC systems.
2. Increase availability and reliance on objective information to augment the continued on-site inspection by the Department's food inspectors.
3. Streamline the regulatory process in line with Administration policies.
4. Shift some of the emphasis from inspection of end products to controls at critical points in the process where significant variation can occur that affects the end product.
5. Establish a base of experience to be drawn upon to assist in determining future directions for regulatory reform.

Development of Federal Meat and Poultry Procedures for Processed Products

In the early part of this century, Congress saw a need for a regulatory inspection program that would assure safe and wholesome meat and meat products for consumers and facilitate the marketing of such wholesome meat and meat products. Therefore, legislation was enacted and a program was developed based on the needs of the public at that time. Government inspectors were stationed at packinghouses to sort out and inspect certain livestock and carcasses and parts thereof. They were also responsible for inspecting the manufacture of processed products of such carcasses, even though there were relatively few products of this type (mainly, formulated sausages with relatively few ingredients). This regulatory inspection program proved to be very effective in fulfilling the statutory objectives. Every animal and its carcass and parts were inspected before and after slaughter (ante-mortem and post-mortem inspection, respectively, which is still performed today on every animal). Inspection also applied to operations involving manufactured products even though every single piece of sausage or retail cut of meat was not individually inspected. Instead, the inspectors would supplement their examinations of samples of the products with examinations of the various manufacturing operations in the plant to make certain they were in order.

Transition Era

In the period immediately following the second world war, national economic growth, advanced technology, industry competition, and other social changes caused a significant evolution in the nature and type of meat and meat food products prepared and marketed. Each year more meat products reaching the consumer were composed of complex blends of ingredients—some of which were technologically synthesized.

During this time, however, the Government's regulatory techniques remained essentially unchanged. As additional inspectors were hired to meet industry growth, the inspection program began to rely more on laboratory analysis to confirm the wholesomeness of finished products. However, the laboratory analyses were used mainly as a check on the inspection program rather than as a tool for monitoring a meat plant's effectiveness in manufacturing products in compliance with the Government's requirements.

In the meantime, data indicated that public health problems from diseased animals were being well controlled. Industry, as well as the Government, was responsible for the disease-free and wholesome product reaching consumers. Meatpackers realized they could not survive at the expense of jeopardizing the public's health.

Modern Technology Era

In the 1950's the post-war trends intensified. There were rapidly growing scientific knowledge and technology, growth in population, expansion of market areas and development of international trade, keener competition, increasing production costs, and a growing consumer interest in consistent and uniform goods and services of all kinds, including meat and poultry products. Consumers came to expect, for example, that a package of a particular brand of hotdogs had the same basic characteristics of appearance, taste, aroma, and texture as the last package purchased. Marked changes began to appear in the meat and poultry industry. Firms began to modernize their plants, and many began to specialize in slaughtering, canning, manufacturing sausage, processing ham, etc.

With these developments, there was an apparent need for more effective production control mechanisms—in modern-day terminology generally called "process quality control." The term "quality contol" (QC) is used as though it has a number of meanings. For example, it may be used in reference to controlling the appearance and taste of products or the finished products requirements, such as moisture content, or to controlling the production process. It more correctly should be used to refer to a method or system of controlling the quality of a process within certain specifications. By the sixties, some meat and poultry processors were designing QC systems specifically for controlling the production process, thereby providing a consistent and uniform product at a predicted cost, as well as one meeting Government regulatory requirements.

Thus, firms were no longer relying entirely on the Department's regulatory system as a product control mechanism and as a means of aiding equitable competition. They found that designing their own QC systems was cost effective as well as an efficient means of assuring compliance with the Department's regulatory requirements.

Status of the Department's Regulatory Efforts

Despite the dramatic changes in the meat and poultry industry, the basic techniques of inspection have remained essentially the same, as the various legislative changes had left the underlying inspection law virtually unchanged.[1] However, there has been an increasing need to rely on methods other than direct physical inspection of products in the face of industry growth (new plants requiring new inspectors), the vast number of new and highly complex products being developed, the advent of computerized formulation, the use of vegetable protein products, the growing stresses on Government laboratory capabilities resulting from the need to detect pesticide and drug residues, antibiotics and other potentially toxic substances, and increasing budget constraints.

During the past few years, the inspection program has been able to develop some new procedures that have increased inspector efficiency. These

[1] In 1967, Congress enacted the Wholesome Meat Act (Pub. L. No. 90-201, 81 Stat. 584), which made a number of changes in the existing law, particularly regarding Federal-State relationships, but which substantially preserved the inspection requirements contained in Title I of the Federal Meat Inspection Act. One year later, the Poultry Products Inspection Act (Pub. L. 90-492, 82 Stat. 791) was similarly amended.

procedures primarily involve the use of statistical sampling. Reliable information can be obtained from samples to control the production process. Sampling schemes can be designed to provide a reliable method for determining whether the lot of finished product is wholesome and otherwise not adulterated and should be passed. For example, with a prescribed sample size from a given lot of battered and fried chicken, an inspector can determine that the lot of battered and fried chicken does not exceed the Government standard of 30 percent batter.

These statistically valid sampling and examination schemes have modified or supplemented many inspection procedures which relied heavily on sight, smell, and taste to determine if a product was wholesome and unadulterated. Moreover, these more objective schemes have minimized the inconsistencies and problems arising from the more subjective inspection approaches.

Synopsis of Quality Control (QC) Concept

With respect to this rulemaking, the concept of QC is to control the production process in order to provide for a consistent and uniform finished product at a predicted cost as well as to conserve resources. A complementary benefit is a way to assure compliance with the Department's inspection regulations. QC can be applied either to the entire food production system of the establishment (i.e., a total plant QC system) or limited to a specific process or product (i.e., partial QC program). In every production process (including meat and poultry production) certain kinds of variations will occur. Factors such as protein, fat, and moisture content, and texture, flavor and color are controllable within certain limits but differences do exist in the finished products. Decisions must be made concerning the limits for each factor. For example, a company may be producing hamburger which is to contain no more than 30 percent fat. A target level of less than 30 percent fat is set, followed by the development of sampling schedules and analytical limits. Then production methods and process control procedures are established to assure that the hamburger is within the 30 percent fat specification. The target level that is set will depend upon how closely the processor can control the production process. One processor might have to aim at 27 percent fat while another might aim at 29 percent because of differences in their abilities to control the process. Both can meet the objective of no more than 30 percent fat.

Under a QC system, "on line" checks are made at key points in the production process. The points are significant in the sense that any unwarranted variation at such a point will generally result in the finished product not conforming to predetermined requirements. The information obtained at these points enables the processor to make adjustments or corrections to the process as necessary, generally long before output quality has been adversely affected. Even when this cannot be accomplished, it allows the processor to isolate the small portion of product that is affected in order not to jeopardize the whole lot.

In using such approaches and establishing targets, sampling plans, and limits, distinctions must be made between controllable and uncontrollable factors. The science of mathematical statistics provides the means to measure and deal with variability. In a production system, such as the one used in the manufacture of meat and poultry products, variations which are uncontrollable, natural, expected, and quantifiable will result in random fluctuations of sample results around some central point (which may also be the target). Knowing the uncontrollable variations and the extent of their fluctuation, a control chart can be designed and used to identify fluctuations due to controllable causes. Those causes can then be eliminated. Corrections can serve the many purposes discussed earlier in this document, namely assuring a consistent quality level, uniform product characteristics, production cost control, and avoidance of the risks of repercussions from the Department's regulatory mechanisms.

Since more and more establishments now use effective QC systems, there is tremendous potential for the Department to use the data and information generated by these systems in order to more efficiently and expeditiously carry out its inspection responsibilities with no loss in effectiveness.

Cost Savings To Be Achieved by Implementing the Quality Control Concept

The potential benefit of total plant quality control to the Department can be measured by expected gains in efficiency. The increase in efficiency can be viewed as either person-years of inspection gained or person-years of inspection avoided. The first represents the case where program growth (new plants requiring inspection) is static while the latter represents the ability to assume the inspection responsibility for additional plants without additional cost.

The draft impact analysis contained projections of expected net benefits to the Department based on a number of assumptions. Included in these assumptions were efficiency gains of 30 and 60 percent in the assumed expected participation rates for various plant sizes. These assumptions were combined with information about average inspection person-years for each size group. The assumed participation was 100 medium to very large processing plants during a 5-year period; no participation was assumed from small or very small plants, those with annual production of 0.5 to 3.0 million pounds, and those with less than 0.5 million pounds, respectively. At the time, it was thought that small plants would not participate in total QC to any significant degree because of implementation costs and other difficulties. Further, since most small plants have traditionally been subject to "patrol" inspection (groups of small plants subject to a single inspection assignment for efficiency), they did not appear to offer much potential for further productivity gain.

Subsequent to the issuance of the proposal, the total QC approach was implemented in a cross-section of pilot plants, including small plants. The small pilot plant experience demonstrated the feasibility of providing departmental assistance for the implementation of total QC in small plants. Although experience is still very limited, it appears that a trained USDA processing specialist may be able to assist as many as 26 small plants per year.

The initial success of total QC in the pilot plant experience suggests that inspection efficiency, beyond that already achieved with patrol inspection, may be enhanced. This would be particularly true in situations where all plants in a given patrol participate in total QC.

Refining the assumed participation rate to include small plants is also reasonable and proper considering the significance of inspection program growth. As mentioned earlier, the prospects for expansion of workload are essentially related to the assumption (designation) of State inspection program responsibilities. Nearly all State inspected plants would fall into the small plant category and could represent a doubling in the number of such plants currently under Federal inspection. The significance of total QC as a means of cost avoidance is underscored by the possibility that designation of all the State inspection

program responsibilities could require an additional 800 Federal inspectors, even if only "patrol" inspection procedures were available to the Department. However, the total QC approach could likely provide enough increased efficiency to the Federal inspection program, particularly in view of the more long-run nature of prospective designation activity, to handle this potential program growth without increasing the inspection force as much as would be necessary without QC systems or programs. That could potentially represent $15 million in annual cost avoidance.

Including small plants in the projections from the draft impact analysis seems appropriate now that pilot plant experience has been gained. Assuming that 10 percent of the small and very small plants participate (the rate for very large plants was 15 percent), the cumulative efficiency impact of total QC for inspection of these plants could range from 74 to 148 inspection person-years (30 and 60 percent efficiency) and represent a benefit of $1.4 to $2.7 million over the 5-year period. Similarly, the 5-year cumulative inspection benefits for medium to very large plants (as developed in the draft impact analysis) is estimated to range from 147 to 293 person-years representing $2.7 to $5.4 million in inspection benefits.

In summary, implementation of total quality control can represent potential efficiency gains of roughly $4 to $8 million over a 5-year period. Expressed alternatively, total QC could provide for a $15 million annual cost avoidance potential if fully implemented in small plants in the absence of State inspection programs.

In addition to the above costs savings to the Department as a result of widespread implementation of QC, any costs incurred by participating plants are expected to be negligible when compared with expected total QC benefits. Although some participants may have to make expenditures for equipment and/or services to implement total QC, most of the expected early participants have already incurred those costs in establishing their own total QC systems. Those systems are expected to be readily adaptable to the requirements of this rule. For other plants, including small plants, the participation costs are minimal (the analyses of these costs are clarified in the final economic analysis for this rule, which may be obtained from the office identified previously herein).

Quality control is a profit-oriented management tool. It provides the information necessary to consistently produce a uniform, quality product at least cost. This action allows the information generated by that management tool to be used by inspectors to verify compliance with inspection requirements and reduces the plant's risk of incurring unnecessarily high costs caused by undetected process failures and subsequent Department compliance actions. A properly designed total QC system minimizes the occurrence of a process failure, indicates a failure without delay, and provides the information needed to quickly locate and correct the cause of the failure. A total QC system benefits the plant by reducing the risk of production delays, the need to reprocess and/or relabel large volumes of product and the likelihood of product recall and condemnation.

Quality control has already played an important role in the success of large national processors. These processors are heavily dependent on QC for the proper control of products produced at their typically large and complex plants. QC has enabled them to target production costs closely, thereby overcoming the marketing cost obstacles presented by national distribution, and to establish a competitive market price. To the extent that this action further enhances QC, it can also have an enhancing effect on the profitability and competitive position of those plants in comparison with those without QC.

Options Considered

Several options were considered before proceeding with the final rule.

Option 1 would continue the current Federal inspection program utilizing voluntary "partial" quality control programs for plants wishing to participate in such programs. This option would not provide for the efficiency gains possible with a total plant quality control approach.

Option 2 would permit implementation of a total plant voluntary quality control system in processing plants as an adjunct to traditional inspection methods. This allows an inspector to utilize a plant's quality control records, together with regular inspection checks and tests, to determine compliance with Federal meat and poultry inspection regulations. Current legislation permits such an option.

Option 3 would adopt a mandatory total plant quality control system. However, a voluntary total quality control system cannot be converted to a mandatory program without enabling legislation and there are no present plans to seek such legislation.

Option 2 was selected for the reasons stated herein.

Comments

The Department received a total of 1,550 written comments from interested individuals and organizations. The comments were divided into the following categories along with the number received:

1. Individuals	1,416
2. USDA Inspectors	64
3. Members of a Union Affiliated with the American Federation of Government Employees (AFGE)	25
4. Private Industry Representatives	20
5. Industry Trade Associations	9
6. Individuals Affiliated with Universities	4
7. Members of Congress	3
8. State Government Representatives	3
9. Employees of Processing Plants	2
10. Unions or Associations not Affiliated with AFGE	2
11. Consumer Organizations	2

Of the 1,416 comments from individuals, 1,135 were submitted on one of six form letters bearing a total of 5,180 signatures.

Fourteen comments were considered generally positive toward the proposal by suggesting that the concept is sound and necessary, and that it will allow the regulatory policies and procedures to keep abreast with technology. Some contained suggestions or made other points which were also raised by other commenters and which are identified and discussed below.

Twelve comments were considered neither positive nor negative. They discussed advantages and disadvantages of quality control in general without specifically addressing the merits of the proposal.

On January 16, 1980, the objectives of the proposal and comments received from the public were discussed with the Secretary's National Advisory Committee on Meat and Poultry Inspection. The Committee is comprised of representatives from the scientific community, State governments, industry, and consumer groups. Although the Committee did not make a specific recommendation, the Administrator of FSQS viewed the individual comments as beneficial and encouraging.[2]

The remaining comments were considered negative toward the proposal and raised a number of issues identified and discussed below:

1. *Freedom of Information.* During the comment period, 16 comments from industry and from persons affiliated with universities expressed concern that

[2] A transcript of the Committee's views is available for public review in the office of the Regulations Coordination Division, Room 2637, South Agriculture Building, Food Safety and Quality Service, U.S. Department of Agriculture, Washington, DC 20250.

the written QC plans and procedures submitted by participating plants would be subject to disclosure, in whole or in part, pursuant to requests under the Freedom of Information Act (FOIA), 5 U.S.C. 552. Moreover, the same concern was voiced by some of the plants initially volunteering to participate in the Agency's pilot plant test studies which began November 5, 1979, and are still continuing in some plants.

The primary purpose of the FOIA is to facilitate release of information contained in government records. However, recognizing that release of certain information requested could cause potential harm to businesses and individuals, FOIA exempts particular commercial and financial information from mandatory release by government agencies. See 5 U.S.C. 552 (b)(4). Much of the material submitted by participative plants would appear to come within this exemption.

It should be noted at the outset that certain information and material about a plant's QC system may exist but would not need to be submitted to the Administrator of FSQS for review and evaluation as a part of the application and approval process. These include intra-plant, intra-company, and intra-corporate QC instructions to employees, position descriptions, data and information relating to customer complaints, specific laboratory methods, information on quality cost programs, quality cost improvement programs, any annual quality plan, and records of audits of the QC system done by an independent consultant or firm.

The material that must be submitted to the Administrator of FSQS by a plant seeking approval of its QC system includes, but is not limited to: recipes for product; specific methods, tests and procedures to examine and control raw materials; in-process critical tests, observations and evaluations; finished product critical tests; finished product specifications; sanitation specifications; sampling plans, including size, frequencies, targets, tolerances, and limits; methods for verifying certain labeling claims (such as "Declared Count"); employee training programs; equipment calibration program; and control charts, graphs, and data.

The material submitted is not standard for each company, but varies because of differences in the nature and cost of such things as raw materials, methods of preparation, variations unique to the equipment, finished product specifications, and overall manufacturing costs.

Quality control systems operated by individual businesses are ultimately for the purpose of maximizing profitability while maintaining product quality in keeping with company policy and requirements, and may also satisfy regulatory requirements. Thus each and every aspect of a company's quality control system in some manner relates to costs and profits. Quality control departments and/or individuals in these companies must show their management the nature and extent of the financial benefits of the QC system. If such information were released under an FOIA request, the nature and degree of a processor's vulnerability to competition could be determined. This could be possible even to a point of knowing whether or not the reason for the vulnerability is due to such things as the inability to obtain the right type of raw materials, because of costs related to equipment, labor, energy, and transportation.

Therefore, the Department's view is that although each request for information under the FOIA will be considered separately, most material required to be submitted to FSQS under the voluntary meat and poultry plant QC system would include trade secrets or confidential commercial or financial information which is privileged or confidential and therefore exempt from mandatory disclosure under the FOIA.

In recognition of the importance of this matter, however, the Department has considered the possibility of returning all copies of material concerning a plant's QC system to the plant or its designated representative after review and approval. Under either arrangement, the material concerning a plant's QC system would have to be readily available and accessible to the Administrator of FSQS or his designee at all times.

It appears that such options are possible but very impracticable for either FSQS or the plant for at least two reasons. First, the FSQS staff personnel at headquarters or regional offices frequently receive telephone inquiries concerning problems or other matters of significance about a particular QC system or program. In the overwhelming majority of cases, such calls cannot be responded to until the staff person receiving the call refers to a copy of the material concerning a plant's approved QC system. If a copy of such material were not on file in the headquarters or regional office, these calls could not be responded to until a copy of the material was made available. This could be cumbersome and time consuming, and in some cases could cause retention of product or even cessation of production until an answer to the inquiry was provided. In any case, this would not appear to serve the plant or the Agency's interest.

A second concern is that of maintaining the integrity of the QC system. Since the Department would not possess a copy, a system would be necessary to prevent the substitution of pages that had not been previously approved by the Administrator of FSQS. Such a system would be time consuming and expensive to operate, and would likely cause communication problems when updating or revising of the system is attempted.

In view of the above, the Department has determined that at the present time it would not adopt a policy that would allow maintaining copies of material concerning a plant's QC system only at the plant or with a designated representative.

With respect to this overall issue, the Department has determined that information submitted by plants in connection with this regulation includes trade secrets or confidential commercial or financial information which is privileged or confidential and therefore exempt from mandatory disclosure under the FOIA. Moreover, release of any such information would inhibit plants from voluntarily participating in a QC program.

2. *Mandatory Quality Control.* The possibility of this voluntary QC rulemaking eventually being made mandatory was expressed as a concern in 14 comments including those from industry, trade organizations and the North Carolina Department of Agriculture.

The Department is committed to continually evaluating all methods used in carrying out its inspection responsibilities. Some changes, such as the way poultry slaughter inspection is conducted, which have recently been instituted, result in substantial manpower savings to the Department with no loss in effectiveness of inspection. While the commitment to find new and better ways to conduct inspection exists, the voluntary total plant QC system cannot be converted to a mandatory program without amending the present Federal Meat Inspection Act and Poultry Products Inspection Act, respectively.

The General Accounting Office report, *A Better Way for the Department of Agriculture to Inspect Meat and Poultry Processing Plants,* dated December 9, 1977, did recommend that the Secretary seek legislative authority to require mandatory total plant QC. The Department has considered that recommendation but has determined to hold in abeyance any immediate effort to seek amendments to the existing Acts

to provide authority requiring mandatory total plant QC systems. This decision is based upon the Department's knowledge of and experience with the industry; the experience of the Department in fulfilling the obligations under the Acts designed to assure that meat and poultry products are safe, wholesome and truthfully labeled; and the limits of the data currently available on the operation of total plant QC systems.

3. *Labeling Logo.* The proposal would have allowed the use of a logo or symbol on the labeling of products to indicate that the products were produced by a plant operating under a QC system approved by the Administrator of FSQS. There were 137 comments expressing concern about the use of the logo. They spanned most groups of interested parties responding to the proposal, including individual consumers, FSQS food inspectors, the inspector's union, industry, trade organizations, persons affiliated with industry, and consumer groups. Some individual consumers as well as people affiliated with universities were concerned because they appeared to misunderstand the proposed use of the logo, in that they believed that the logo would be used in lieu of the requisite inspection legend which states "U.S. Inspected and Passed" or "Inspected for Wholesomeness by U.S."

Industry commenters opposed use of the logo on two bases. First, there was the argument that a logo would not have the prestige of the requisite inspection legend; and second, that the meaning a logo would have to consumers could be discriminatory to those plants not desiring to participate in a total QC system and therefore not entitled to use the logo. Most industry commenters generally expressed the opinion that the logo could be misinterpreted as an indication of superior product quality and that as such it would be untruthful and confusing to consumers.

Whether or not the logo would gain the acceptance and respect enjoyed by the inspection legend would depend on the success of the QC system and the public's understanding of it. Whether or not the use of two separate official USDA marks or devices would confuse consumers appears to be conjecture. However, the Department is aware that some consumers do not understand the distinction between other markings which are currently used by the Department, such as the meat quality grade marking "U.S. Choice," and the Federal inspection mark "U.S. Inspected and Passed." Over the years, the Department has continued to offer information and education programs to promote understanding of its programs. Those efforts will continue.

However, the labeling logo was proposed with the expectation that establishments with FSQS approved total plant QC systems would desire to communicate that fact to their customers.

Under the Federal meat and poultry products inspection Acts and the regulations thereunder, establishments participating in the QC program would be permitted to advise consumers of their products of such participation through some form of labeling technique or logo, as long as it is not false and misleading.

The Department believes that the proliferation of company devised labeling techniques or logos would be confusing to consumers, and further, that any Department-sponsored education program would be ineffective to eliminate such confusion.

Therefore, the Department believes that a standard QC logo is not only appropriate, but necessary to avoid confusion among consumers concerning the products being purchased. It should be emphasized, however, that the logo itself is not required to be used, but may be voluntarily used by participating companies.

Therefore, after considering this matter and the factors previously discussed, the Department has determined to retain the proposed provisions for the labeling logo.

4. *Terminology.* Six comments questioned the appropriateness of the terminology "quality control" in connection with the proposed rule. These comments were from consumer groups, the FSQS food inspector's union, and trade organizations.

There have been a number of terms used in the development of more formal and systematic controls for manufacturing in general. However, during this developmental period the term most commonly used in everyday conversation, in technical conferences, and in literature, sales and marketing information has been "quality control."

The Department's evaluation and understanding is that the proposed term has two major meanings within the discipline. First, it is used to refer to the relative attributes or characteristics of a product. Second, it is used in referring to the effectiveness of control over a production process to assure uniformity and predictability of the characteristics of a finished product.

An example of the first meaning might be a particular brand and type of ham which possess qualities thought of by the consumer as being desirable, such as the amount of waste (if any), the amount of connective tissue present, the color and texture of the meat, and so forth. An example of the second meaning could be the degree of control in manufacturing the ham to assure that the same muscles are always used in the right proportions, that the muscles are always trimmed the same way, that the connective tissue is adequately removed, that the curing solution added is carefully controlled to assure proper preservation and uniform appearance of the finished product, that the cooking process assures product finished to the same degree of doneness, and the chilling and packaging procedures do not vary so that surface dehydration or color deterioration is not excessive. These factors, and others, must be controlled so that there are minimal differences from ham to ham and lot to lot, in order to build customer confidence that the product is always the same.

Therefore, these two major meanings of "quality control" are generally recognized and accepted in academia, by the American Society for Quality Control and its members, and in the industrial arena. Even though "quality control" is the more universally used and accepted terminology, other terms are used in industry, such as "Product Performance," "Product Integrity," "Quality Assurance" and "Process Control."

Some companies or individuals make distinctions between "quality control" and "quality assurance." In such cases, the prior term is usually used to refer to the actual in-plant control of a manufacturing process while the latter usually refers to an auditing function that assures the in-plant control is functioning effectively. In other situations the terms quality control and quality assurance are used interchangeably.

Under the circumstances, the Department has determined that the importance of the terminology used is related to the clarity of meaning and purpose. The term "quality control," as used in connection with this rule, refers only to the effectiveness of manufacturing controls and assurance that products are not adulterated or misbranded (that is, the second meaning and example cited above). Thus, the term "quality control" is retained in this rule.

5. *Continuous Inspection.* Acknowledged and discussed in the preamble to the proposal was a question of whether or not the proposed changes in inspection methods would be an abdication of the Secretary's responsibilities under the Federal Meat Inspection Act (FMIA) and the Poultry

Products Inspection Act (PPIA). Section 6 of the FMIA (21 U.S.C. 606) provides in part that "* * * the Secretary shall cause to be made, by inspectors appointed for that purpose, an examination and inspection of all meat food products prepared for commerce in any slaughtering, meat-canning, salting, packing, rendering, or similar establishment * * * and said inspectors shall mark, stamp, tag or label as 'Inspected and passed' all such products found to be not adulterated; and said inspectors shall label, mark, stamp, or tag as 'Inspected and condemned' all such products found adulterated * * *."

A narrow interpretation of the above language could mean that a departmental inspector must personally and literally inspect (by some method which the Act does not prescribe) every frankfurter, package of luncheon meat, pork chop, etc., before it could bear the "Inspected and Passed" wording, and further that a departmental inspector must personally and literally place every label, mark, stamp, or tag on each such item. This language has not been so narrowly interpreted in the administration of the Act. To the contrary, the Department has exercised some discretion regarding its methods of inspection, particularly with regard to processed products with complex formulations. The Department has adhered, however, to the principle that Federal inspectors make the determinations as to which products are adulterated and misbranded and which are not, and that the marks of Federal inspection are placed on the products by the inspectors or by establishment employees under that degree of supervision by the inspectors necessary to assure the marks are properly applied only to products eligible therefor.

Similar provisions regarding inspection are contained in section 6 of the PPIA, although the Secretary has slightly more discretion under this Act with respect to the extent of inspection of "further processing" of poultry products than he has under the FMIA with respect to meat food products.

There were 392 comments that indicated that the proposed rules could not be considered continuous inspection as prescribed in the cited provisions of the Federal Meat Inspection Act and Poultry Products Inspection Act. The comments came from individuals, FSQS food inspectors and the inspector's union.

The Department has again carefully evaluated this matter. It is important to reiterate to consumers of meat and poultry products that this rule does not reduce the Department's authority and responsibility under continuous inspection, or the authority and responsibility of the Department's inspector to carry out inspection requirements. It does not reduce the Department's authority and responsibility to remove adulterated or misbranded product from the food chain or to deal with any unscrupulous operator.

6. *Reopening the "comment period".* Since publishing the proposed rulemaking, the Food Safety and Quality Service of the Department has been engaged in testing total plant quality control concepts on a pilot basis in certain cooperating plants. As of July 1, 1980, those who have or are cooperating include: Peter Eckrich Company, Chicago, Illinois; The Kroger Company, Salem, Virginia; Saluto Foods, Montgomery, Alabama; Tyson's Foods, Monnett, Missouri; Safeway Stores, Stockton, California; S. Clyde Weaver, East Petersburg, Pennsylvania; Edwards Sausage Company, Lawrenceburg, Kentucky; Berks Packing Company, Reading, Pennsylvania; Portiontrol Foods, Mansfield, Texas; Equity Meat Corp., North Baltimore, Ohio; Von's Grocery Company, El Monte, California. Others indicating a definite interest include: Armour Foods, Fort Madison, Iowa; Cudahy Co., Denver, Colorado; and Rudy's Farm Company, Florence, Alabama. Eight comments from industry representatives requested that the comment period on the proposal be reopened after all the plant studies have been completed.

The objectives of the plant studies are to:

a. Determine the extent of industry interest.

b. Identify and evaluate the nature of industry concerns.

c. Refine the specifics actually needed in a written QC system.

d. Provide additional experience in preparing audits of inspection procedures for FSQS personnel.

e. Gain greater insight into the degree of inspection efficiency than was available.

f. Gain deeper insight into the nature and extent of training necessary for FSQS food inspectors.

g. Develop the logistics and a regimentation for evaluating, approving, implementing and monitoring total plant quality control systems.

As the above indicates, the objectives of the plant studies relate to the most effective and efficient means of establishing and maintaining a program, and not to adding new information relating to the suitability of the QC concept. Thus, the Department need not delay this rulemaking until the completion of the studies to determine the appropriate substance of a final rule.

7. *Less Consumer Protection.* Some 144 comments, including those from individual consumers, consumer groups, FSQS food inspectors, and the inspector's union expressed concern about a possible reduction in consumer protection. The comments also expressed views that the consumer would be better served and tax money better spent by increasing the current FSQS inspection force and remaining with the current "on-site" inspection. It was also suggested that Federal inspection personnel must maintain full authority over all phases of inspection with full authority to retain, reject or condemn any quantity of product, facilities or equipment which is deficient or not satisfactory. Many of these comments offered the view that the adoption of the quality control concept would not provide the consumer with the clean, healthful and unadulterated meat product to which said consumer has become accustomed.

A crucial concern of the Department is that consumer protection not be lowered or jeopardized by the quality control program. The Department intends to ensure that such a consequence will not occur. In plants volunteering for the program, all data and information generated by the plant's quality control system will be available to the Department's inspection personnel pursuant to the establishment's approved QC system. Thus, the Department's food inspectors will actually have additional information available for use in carrying out the inspection responsibilities of assuring consumers safe, wholesome and truthfully labeled products. Since this additional data and information will now be available to the inspectors, they will no longer need to personally generate as much data and information as is now necessary. Thus, there exists the potential for increased efficiency in inspection resources for the Department.

Based on the Department's knowledge and experience with partial quality control programs, the experience of the test plant studies, and the experiences of other government agencies with the quality control concept, the Department believes that this voluntary quality control program will be more efficient than the present system of processing inspection, with no lowering of consumer protection.

8. *Recordkeeping.* One attribute of a QC system is the records maintained by the plant and their availability. These records will show the nature and type of checks done at various critical control points throughout the process, the

findings of those checks, and other complementary material—such as charts and graphs. The scope and intent of such records will vary significantly from plant to plant based on numerous variables such as size of plant, number of employees, types of products, type of equipment and its capability, and the volume of production. The proposed rule did not specify the scope and extent of records that would be needed for voluntary participation in the quality control program.

Ten comments from FSQS food inspectors and the industry expressed concern that recordkeeping requirements could be excessive, burdensome and costly. The Department acknowledges that such an inference could be drawn. As indicated above, however, while some recordkeeping will be necessary to ensure the continuing effectiveness of a plant's QC system, the Department will not insist on recordkeeping in a QC system beyond that necessary to demonstrate the effective administration of that system. In some cases, the usual records may be adequate. In others, modification of existing records or additional records may be needed. However, such records will most likely be as beneficial to the plant's management as to the Department. In accordance therewith, the provisions concerning recordkeeping contained in the final rule have been clarified to assure that the records agreed to be available to Department personnel under the QC system will be maintained to enable the Department to monitor compliance.

9. *Uniform Approval and Administration.* Three comments were received from industry which expressed concern that a decentralized system of reviewing, approving and administering the quality control program could lead to inconsistent and conflicting policies and procedures. This, the comments indicated, would confuse and frustrate the industry, and would make it extremely difficult for the larger processors to operate in multiple regions and areas. The Department recognized this as a potential matter of interest to the industry and discussed it in the preamble of the proposed regulation.

While eventual decentralization to the regional level for handling some aspects of the program could occur, the Department is initially committed to central control. Any decentralization will be considered only after suitable guidelines and criteria have been developed and a suitable audit system has been devised to assure a sound, uniform and consistent manner for reviewing, approving, administering, and auditing the QC systems.

10. *New product test-marketing.* It is common in the industry to test market new products on a limited scale and in carefully selected locations before company commitments are made to go into full scale manufacturing and broad-based marketing. In most cases, modifications in the product and/or process occur as a result of the test-marketing data and experience. Also, in some cases, company commitments necessitate the purchase and installation of expensive equipment, and even in a few cases the expansion or modification of existing buildings, or erecting new structures. In many other cases, decisions are made to shelve a product after the test-marketing.

The intent of the Department's proposed rule was that a formal quality control system be approved for all phases of the processing, for all products in a plant, and for all supporting functions, such as sanitation, pest control, and so forth.

A trade organization in one comment raised the question of how new experimental products could be test-marketed if a detailed quality control procedure must be approved even though the product and production process may have not been finalized.

Many parts of a plant's QC system are general, such as sanitation, pest control, employee welfare and training, and maintenance of the facilities. Even for new product development, all of these parts of a manufacturing plant's support system would remain intact and functional. In view of this, and recognizing that modifications may be required in the development of a new product, the Department agrees that a special procedure should be provided for such cases. The final rule, published hereafter, contains provisions permitting (with certain limitations) the manufacture of a new product for up to 6 months in a plant for which total quality control has been approved.

Although a product is new, the processor must still detemine the objectives for any particular test production run. The objectives will include a formula for the new product, a processing procedure, and what the key points will be for controlling production runs to assure the product meets specifications. This information is conveyed to plant employees responsible for conducting the production runs. The same information could be provided the Department's food inspector.

In view of the special need, provision is made for the processor to convey the information to the Department's inspector prior to initiating production runs. If the inspector determines that labeling for the new product has been approved by the appropriate officials of FSQS, and that the method for controling the production runs will assure that the product meets all Federal requirements, he may allow production of new products (not reformulation of old ones) for test-marketing for up to 6 months. By the end of the 6-month period, the processor must have a quality control procedure approved by the Administrator in order to continue production of the new product under a total QC system.

The Department believes the procedure will provide adequate flexibility to the processor for the production and test marketing of new products, while affording the public and the Department the benefits and the protection provided by the QC system.

11. *Reduce inspection overtime and upgrading quality of inspection.* Under current laws and policies, the cost of Federal mandatory inspection of meat and meat food products and poultry and poultry products is required to be borne by the United States, except the cost for overtime and holiday work. Many plants work more than 8 hours per shift, and others conduct some operations requiring inspection during holidays. In these cases, FSQS bills the plant for reimbursement at the current rate of $15.44 per hour of additional inspection service rendered. An approximate average annual cost for a processing plant is $3,000 per year, with some plants paying as much as $48,000 per year.

With respect to the above, and because there are some industry concerns about the quality of inspection rendered, the Department received six comments from industry personnel stating that the charges for this additional inspection time should be reduced or eliminated—coupled with more efficient use of the Department's food inspectors—and that the quality of inspection rendered should be upgraded.

One of the goals of the total plant quality control program is to improve efficiency of inspectional resources—including use of personnel. The Department recognizes that achieving efficiencies could be slow initially, but will be realized as experience is gained. To the extent that a QC system or program does make inspection more efficient, there may be a reduction in the amount of overtime work required. However, since inspection is required by law and plants receiving overtime inspection must bear the costs of overtime work, if overtime is needed,

those costs to inspected plants cannot be eliminated.

The Department believes that any shortcomings in the quality of inspection that might now exist can be improved with the development of this QC program, and with training and education, experience, good communications between the Agency and industry, and finally with effective supervision.

12. *Impact on small business.* Some 23 comments from trade organizations and academia expressed concern about the impact of this program on small business. Some commenters indicated a fear they would be "squeezed out." Other commenters stated that the need to designate a plant employee as responsible for QC records and the sampling and testing of products would present serious problems to small plants with limited numbers of employees. In addition, inquiry was made about the Department's definition of "small business."

The principles and procedures for QC are as applicable and beneficial to small processors as to large ones. In many cases, QC systems in small plants can be more efficiently administered due to more simple organization structures and more direct means of communicating.

Moreover, contrary to the impression that some people have that the term "quality control" requires highly trained technicians working in expensive laboratories, a plant QC system can be rather simple and inexpensive, and still be effective.

The Department is aware that, in many cases, the small processor does not have the variety of raw materials or production options available to the large processor, must rely on product quality, production costs, and in some cases distribution advantages in order to effectively compete, and cannot afford the expensive laboratory equipment and professional quality control staff which many large processors use with their "in process" controls. However, any measurements necessary in the operation of a QC system can be made by regular plant employees with relatively little training. Moreover, inexpensive analytical equipment is available and can be operated by the regular employees. Use of such equipment is usually fast, economical, and adequate for the purpose. Suppliers to the meat and poultry industry, particularly those engaged in selling non-meat and non-poultry ingredients such as spices and flavorings, often make analytical help available as well.

In developing this rule, the Department has recognized the need to consider its impact and effect on the small processor. In the past, the Department has assisted many small processors in implementing microbiological monitoring of their sanitation programs without employing a microbiologist; determining fat and moisture content of frankfurters and bologna without expensive laboratory equipment or chemists; and controlling the count of product units in a container by periodic samples and charting results. In testing total plant QC in one very small plant, the Department provided direct assistance in doing an analysis of the plant operations, identifying and recommending techniques that could be employed by the plant, preparing the written QC system, and implementing that system. The Department will provide the same type of assistance to small processors in the future to assure they will not be squeezed out.

Moreover, a Small Plant QC Guidebook is being prepared and will be ready for distribution shortly. Using the Guidebook with a minimal amount of further assistance, a plant owner or operator could develop the basic framework of a total plant QC system. Copies of the Guidebook may be requested now, for mailing as soon as it is finished, from the FSQS Information and Legislative Services Division, Outreach Branch, U.S. Department of Agriculture, Washington, D.C. 20250.

It should be noted that small plants already have some sort of "control" program. While it may not be formal, in most cases, it will require only minimal effort to comply with requirements for the Department's approval. Entering into the voluntary total plant quality control program may mean an additional expense to the plant. However, as noted above, this expense will be minimal and will vary depending on how elaborate or refined the plant desires the QC system to be. In any case, the program is strictly voluntary.

The Department has not formally defined "small business" with respect to this rulemaking, except for the purpose of doing an economic impact analysis. That definition included plants producing 3 million pounds or less of product per year. The definition of a small business used by the Small Business Administration is one with 500 or fewer employees. Neither definition would seem appropriate for this program.

Rather than define the term "small business" for this regulation, the Department has determined that it will provide assistance to all plants requesting it to the extent resources allow. This will be in keeping with the commitment that small processors will not be injured because they did not understand the Department's policy and requirements for a quality control system.

13. *Concern with plant records unrelated to health, safety, and labeling matters.* One comment from industry raised the issue, which is related to one earlier discussed, of the meaning of the terminology "quality control." The commenter was concerned that the Department would regulate nutritional quality and sensory factors such as taste, aroma, appearance, and size by establishing specific requirements for specific products. That is not the objective of the proposed quality control program. The purpose for submission of a total plant QC system for the Department's approval is to provide a basis to determine how and to what extent the QC system meets regulatory requirements, and provide insight into the scope of the plant's methods, procedures, and specifications. The Department would not require, for example, that information relating to sensory or nutritional quality factors be included in a QC system except in cases where product covered by the program bears labeling claims of nutrient content.

14. *Business capriciously damaged.* Three comments from academia expressed concern about the likelihood of business reputations being capriciously damaged or plants being shut down due to unusual human error or political motivation.

The principal source of this concern seemed to have emanated from the provisions in the proposed regulation outlining circumstances under which approval of a plant's QC system or program could be terminated. It is true that approval of a plant's QC system or programs will have to be terminated if the plant fails to effectively administer the system. It is also true that no matter how good and just the reasons, there could be disagreements between the Department and the plant concerning the adequacy of the basis for any termination.

The proposal addressed this matter and prescribed procedures for withdrawing approval of a total QC system or partial QC program. Terminating approval does not mean that the official grant of inspection will also be automatically withdrawn. In addition, procedures prescribed for terminating approval of the plant's QC system or program will include an opportunity for a hearing, upon request, in those instances where there is a conflict as to the facts concerning the adequacy of the basis for any termination. The Department, therefore,

concludes that the procedures provide the establishment with adequate opportunity to present its view in such matters and that the safeguards against defamation are reasonable.

15. *Expedient and efficient procedures for terminating approval of a quality control system or program.* One comment from the American Federation of Government Employees (AFGE) indicated that the procedures in the proposal for terminating approval of a plant's QC system or program were too cumbersome and time consuming, and could jeopardize consumer protection.

The proposal provided two provisions for terminating approval. Both are retained in this final rule. First, in the event adulterated or misbranded product is found by the Administrator to be distributed in commerce, approval may be *immediately terminated* pending final disposition of the matter after opportunity for a hearing on any disputed issue of fact. In the Department's view, this procedure is expedient and efficient while assuring a reasonable degree of fairness by providing for redress. Additionally, the Department believes that this basis for terminating approval should necessarily be extended to those situations where it is determined that adulterated or misbranded product is found to have been prepared for commerce, even though the product has not yet been distributed in commerce. The final rule, therefore, provides for termination of approval in the event that adulterated or misbranded product is *either* prepared for *or* distributed in commerce.

The second provision establishes a procedure to be used in the event problems arise in the effectiveness of the plant's QC system or program and inadequate correction of problems occur (adulteration or misbranding not involved). In such cases, the owner or operator of the establishment will receive a letter from the Administrator of FSQS or his designee, identifying the ineffectiveness and/or problems and giving the owner or operator 30 days to remedy them. If after 30 days the ineffectiveness and/or problems are not remedied, approval will be terminated. Since adulteration or misbranding is not involved, the Department has concluded that more stringent actions are not immediately necessary and that allowing a plant the opportunity to improve its performance under its QC system or program will not jeopardize the consuming public.

16. *"Approved list" of plants.* The proposal indicated that upon approval and implementation of a plant's total QC system, press information would be released identifying the plant's name and location. In addition, the proposal stated that a current list of plants having approved QC systems would be maintained and available to the public.

One comment expressed the concern that plants not having approved QC systems, or having had such approval and later having had it terminated, could cause those plants to be looked upon unfavorably by present or potential customers.

Developing and operating an effective total plant QC system is newsworthy and the public has a right to be advised. Issuing press information serves that purpose. Maintaining a list of plants having approved total plant QC systems and making it available to the public will also serve the same purpose. Moreover, if information concerning the names of plants having approved total plant QC systems were requested under the FOIA, the Department would have to release such information. Consequently, a list of names of approved QC plants and their locations will be developed and made available to the public.

17. *Accurate economic impact analysis.* Five comments challenged the accuracy of the draft economic impact analysis done in connection with the proposal. These originated with the FSQS food inspectors' union, consumer groups and the industry.

The presentation of information in the draft impact analysis concerning the costs that might be incurred by a plant (in the footnotes of the tables rather than the text) apparently confused several commenters. The draft impact analysis was based on an estimate that 100 small plants would be in the program at the end of 5 years, and an estimate that the total additional costs to small plants would be approximately $15,000 over that period. Thus, $15,000 divided by 100 plants is $150, and that divided by 5 years is $30. Such proration did leave open the opportunity to draw an incorrect inference that the total cost for one plant would only be $30. The Department's best estimate for one plant is $1,600. That is, the estimated initial cost of $1,000 plus $150 per year maintenance cost. This matter is being clarified in the Final Impact Analysis prepared in connection with this final rule.

18. *QC may increase the total cost to the national food system.* Twelve comments from consumers, consumer groups, the American Federation of Government Employees, members of academia and trade organizations stated that the Department should not adopt the proposed rule solely to reduce tax expenditures if there is an equal or greater expenditure of monies by business (and ultimately consumers) to comply with its provisions. Moreover, the commenters indicated that since the economic impact analysis done in connection with the proposal did not evaluate the economics from this scope, there should be an economic impact study to determine its potential or expected cost or savings to the consumer, the industry, the food inspector's union, and the Department of Agriculture.

The primary goal of the voluntary total plant quality control program is not to reduce expenditures but to improve efficiency at the current level of funding and in furthering regulatory reform. The program is voluntary and would not be adopted by a plant if its costs outweighed its benefits. However, the Department is aware of a number of companies that have effective total plant QC systems, and will maintain them for their own benefit. In most cases, these companies also incorporate procedures to assure compliance with regulatory requirements. The Final Impact Analysis indicates the economic impact to industry should be minimal. Therefore, it follows that there would be minimal increased consumer costs that would result from the adoption of the voluntary total plant quality control program.

19. *Lack of formal guidelines for inspectors.* One comment from a Department food inspector indicated that inspectors need well defined and published standards or guidelines in order to monitor all aspects of the total plant QC system; and that until these are provided, QC systems cannot be adequately evaluated.

There are a number of ways the Department intends to deal with these concerns. First, in participating plants, specific instructions will be developed for inspectors to use in carrying out their inspection responsibilities. Second, each FSQS Meat and Poultry Inspection Regional Office has competent staff personnel who will evaluate the operations of plants. Third, as discussed earlier in this preamble, the Department has developed a training program for its inspectors and supervisors who would be responsible for plants having approved total plant QC systems. The training program takes into consideration the principles of quality control, as well as a number of technical subjects such as principles of food microbiology. Its development involved extensive discussions and evaluations by the scientists and key Department administrative officials. Moreover, the Department's expert consultant—hired to conduct quality control seminars for the Department's technical specialists—

participated extensively in the design of the training program for inspectors and supervisors. As the program develops, modifications will be made as necessary. The Department believes these measures are more than adequate to initiate and administer the program.

20. *Availability of plant representative.* The wording in the proposed regulation that an establishment person must be available to the Department's food inspector for consultation "at all times" was of concern to one trade association.

The intent of the wording was to alert the industry that one person must be responsible for a plant's overall QC system. That person must be available to the inspector for consultation in the event the inspector encounters some unexpected but serious problem in the plant, or is encountering difficulty in understanding a lack of administration of the QC system by plant personnel, or finds it necessary to question any change in plant practices or procedures.

The implication of the comment was that food inspectors might find a need to call the "responsible person" out of bed at night, or on weekends, holidays, etc., when plant manufacturing was not occurring. The Department does not believe that FSQS food inspectors would act in such a manner, but if one did, first line supervisors would intervene. However, in order to assure that a responsible plant official is available in multishift operations, the plant owner or operator should designate a "responsible person" for each shift.

21. *Qualifications of personnel.* Two comments expressed the belief that the qualifications of the Department's food inspectors and supervisors should be equivalent to those of their industry counterparts; and that the redefinition of the food inspectors responsibilities and its effect on General Schedule (GS) rating and pay scale must be addressed.

The Department's information indicates that overall its inspection personnel are on par with those in industry, and believes the inspection personnel are competent and capable. The Department recognizes, however, that special knowledge and skills will be needed in connection with the QC program, and as previously discussed, special training will be provided to inspectors and supervisors assigned to plants with total plant QC systems.

22. *"De facto" partner with industry.* One comment from a trade association raised the question of whether or not a Federal regulatory agency could serve as a "de facto partner" in quality control for hundreds of plants across the Nation and yet render timely, flexible and cost-effective decisions.

One of several capabilities of a plant's QC system is to satisfy regulatory requirements. The Department's inspection responsibility is to be sure that legal requirements are met. There appears to be no conflict of interest in such a relationship between the Department and industry. Both can benefit. Under such arrangement, the Department will not be any less able to render timely, flexible and cost-effective decisions, but can in fact improve in those areas.

23. *Endless testing.* One commenter expressed concern that FSQS could insist on large testing efforts in order for a plant to gain approval for its QC system, and then subsequently decide that such testing should be maintained long beyond the time necessary to achieve the purpose for which it was originally needed.

It is true that in cases where there is doubt or question, plants interested in the total quality control system could be requested to submit data demonstrating that the quality control procedures are effective. Beyond that, any good QC system will generate sufficient data to demonstrate that things are in "control," and that the Department's regulatory requirements are being met. Under these circumstances, the generation of data would not be necessary.

24. *Food inspector support.* Two commenters alleged that Department food inspector support for the total plant quality control system was minimal, and recommended that further support be developed since the success of the program depended in large part upon the attitude and cooperation of those in-plant inspectors.

Also, in these two comments there appeared to be concern about the potential for retaliatory action by food inspectors against plants contemplating or in fact participating in the quality control program. The Department believes that such consequences are unlikely to result from the adoption of QC systems and programs. During the months this program has been developing, inspectors have been informed of the goals and objectives of the Department's effort, the reasons for it, and the benefits to individual employees and the inspection cadre as a whole which should result from QC. The Department's inspection force is now demonstrating considerable interest in QC. In the past, inspectors have shown their integrity by supporting and administering new initiatives and the Secretary has confidence that will occur with QC.

25. *More industry freedom.* There was a suggestion in one comment that plants could develop their own QC systems as desired and if successful, would eliminate the need for review and monitoring by the Department.

This suggestion contemplated that the Department should establish a policy to allow plants to develop and implement quality control systems without prior approval and that the Department could institute a method for spot-checking the plants to determine whether or not the quality control system is adequate and effective. The suggestion implies that the plants could and would develop and implement QC systems that adequately satisfy regulatory requirements.

The Department's experience with partial QC programs has not shown the feasibility of such an approach, even if there were no other constraints. In many cases the submitters are convinced that their QC programs are more than adequate. Upon further review by the Department, some QC programs are found to be inadequate. Moreover, total plant QC would be a new experience. In order for the Department to assure adequate consumer protection, it is essential that the Administrator evaluate the total plant QC system or parital QC program prior to approval and implementation.

26. *Use of AQL's.* One comment indicated the Agency should develop Accepted Quality Level (AQL) programs for food inspectors to use for various products instead of the total plant quality control system proposed.

This comment suggests that sampling and examination (or analysis) of a finished product is preferable—and in some way assures good manufacturing practices—to "process control" backed up by occasional finished production examination and analysis. The Department has extensive experience with AQL programs which have in fact been very useful and beneficial. However, the Department has found that controlling a production process at key control points, thereby "preventing" problems (as a QC system can), can be far more effective and efficient than AQL programs.

The Final Rule

After reviewing the comments received, the Department has determined that the provisions of the proposal should be adopted for the (1) application for total plant and partial plant quality control, (2) evaluation and approval of total plant and partial plant quality control, (3) termination of total plant and partial plant quality control, and (4) use of a uniform QC logo or symbol on products produced in a plant

with an approved QC system. In addition, a new provision is included in the final rule so that a plant with an approved total QC system can produce a new product for test-marketing for up to 6 months without prior submission of a quality control procedure for that product. Under this special procedure, the plant will submit adequate data to the inspector-in-charge so that he can determine that the label has been approved for the new product and that the processor's method for controlling the process and product will assure that all Federal requirements are met.

Editorial changes have been made in the final rule to coincide with the stated conventional terminology, and eliminate the abbreviations of quality control. The term "poultry food product" as used in the proposal has been modified to "poultry product" so that the regulations would apply to this larger class of product. This was the Department's original intent.

PART 318—ENTRY INTO OFFICIAL ESTABLISHMENTS: REINSPECTION AND PREPARATION OF PRODUCTS

Therefore, § 318.4 of the Federal meat inspection regulations (9 CFR 318.4) is amended by changing the section heading and the Table of Contents, by rewording the second and third sentences of paragraph (b), and by adding new paragraphs (c), (d), (e), (f), and (g) to read as follows:

§ 318.4 Preparation of products to be officially supervised; responsibilities of official establishments; plant operated quality control.

* * * * *

(b) * * * In order to carry out this responsibility effectively, the operator of the establishment shall institute appropriate measures to assure the maintenance of the establishment and the preparation, marking, labeling, packaging and other handling of its products strictly in accordance with the sanitary and other requirements of this subchapter. The effectiveness of such measures will be subject to review by the Department.

(c) *Applying for Total Plant Quality Control.* Any owner or operator of an official establishment preparing meat food product who has a total plant quality control system or plan for controlling such product, after ante-mortem and post-mortem inspection, through all stages of preparation, may request the Administrator to evaluate it to determine whether or not that system is adequate to result in product being in compliance with the requirements of the Act and therefore qualify as a U.S. Department of Agriculture (USDA) Total Plant Quality Control Establishment. Such a request shall, as a minimum, include:

(1) A letter to the Administrator from the establishment owner of operator stating the company's basis and purpose for seeking an approved quality control system and willingness to adhere to the requirements of the system as approved by the Department; that all the establishment's data, analyses, and information generated by its quality control system will be maintained to enable the Department to monitor compliance and available to Department personnel; that plant quality control personnel will have authority to halt production or shipping of product in cases where the submitted quality control system requires it; and that the owner or operator (or his/her designee) will be available for consultation at any time Department personnel consider it necessary.

(2) In the case of an establishment having one or more full-time persons whose primary duties are related to the quality control system, an organizational chart showing that such people ultimately report to an establishment official whose quality control responsibilities are independent of or not predominantly production responsibilities. In the case of an establishment which does not have full-time quality control personnel, information indicating the nature of the duties and responsibilities of the person who will be responsible for the quality control system.

(3) A list identifying those Parts and sections of the Federal meat inspection regulations which are applicable to the operations of the establishment applying for approval of a quality control system. This list shall also identify which part of the quality control system will serve to maintain compliance with the applicable regulations.

(4) Detailed information concerning the manner in which the system will function. Such information should include, but not necessarily be limited to, questions of raw material control, the critical check or control points, the nature and frequency of tests to be made, the nature of charts and other records that will be used, the length of time such charts and records will be maintained in the custody of the official establishment, the nature of deficiencies the quality control system is designed to identify and control, the parameters or limits which will be used, and the points at which corrective action will occur and the nature of such corrective action—ranging from least to most severe: *Provided,* That, subsequent to approval of the total plant quality control system by the Administrator, the official establishment may produce a new product for test marketing provided labeling for the product has been approved by the Administrator, the inspector in charge has determined that the procedures for preparing the product will assure that all Federal requirements are met, and the production for test marketing does not exceed 6 months. Such new product shall not be produced at that establishment after the 6-month period unless approval of the quality control system for that product has been received from the Administrator.

(d) *Applying for Partial Quality Control.* Any owner or operator of an official establishment preparing meat food products who has a quality control program for a product, operation, or a part of an operation, may submit it to the Administrator and request a determination as to whether or not that program is adequate to result in product being in compliance with the requirements of the Act. Such a request shall, as a minimum, include:

(1) A letter from the establishment official responsible for quality control stating the objective of the program, and that all data and information generated by the program will be maintained to enable the Department to monitor compliance and available to Department personnel.

(2) Detailed information concerning raw material control, the critical check or control points, the nature and frequency of tests to be made, the charts and records that will be used, the length of time such charts and records will be maintained in the custody of the official establishment, the limits which will be used and the points at which corrective action will occur, and the nature of the corrective action—ranging from the least to the most severe.

(e) *Evaluation and Approval of Total Plant Quality Control or Partial Quality Control.* (1) The Administrator shall evaluate the material presented in accordance with the provisions of paragraph (c) or (d) of this section. If it is determined by the Administrator on the basis of the evaluation, that the total quality control system or partial quality control program will result in finished products controlled in this manner being in full compliance with the requirements of the Act and regulations thereunder, the total quality control system or partial quality control program will be approved and plans will be made for implementation under departmental supervision.

(2) In any situation where the system or program is found by the Administrator to be unacceptable, formal notification shall be given to the

applicant of the basis for the denial. The applicant will be afforded an opportunity to modify the system or program in accordance with the notification. The applicant shall also be afforded an opportunity to submit a written statement in response to this notification of denial and a right to request a hearing with respect to the merits or validity of the denial. If the applicant requests a hearing and the Administrator, after review of the answer, determines the initial determination to be correct, he shall file with the Hearing Clerk of the Department the notification, answer and the request for hearing, which shall constitute the complaint and answer in the proceeding, which shall thereafter be conducted in accordance with Rules of Practice which shall be adopted for this proceeding.

(3) The establishment owner or operator shall be responsible for the effective operation of the approved total plant quality control system or partial quality control program to assure compliance with the requirements of the Act and regulations thereunder. The Secretary shall continue to provide the Federal inspection necessary to carry out his responsibilities under the Act.

(f) *Labeling Logo.* Owners and operators of official establishments having a total plant quality control system approved under the provisions of paragraph (c) of this section, may only use, as a part of any labeling, the following logo. Any labeling bearing the logo and any wording of explanation with respect to this logo shall be approved as required by Parts 316 and 317 of this subchapter.

(g) *Termination of Total Plant Quality Control or Partial Quality Control.*

(1) The approval of a total plant quality control system or a partial quality control program may be terminated at any time by the owner or operator of the official establishment upon written notice to the Administrator.

(2) The approval of a total plant quality control system or partial quality control program may be terminated upon the establishment's receipt of a written notice from the Administrator under the following conditions:

(i) If adulterated or misbranded meat food product is found by the Administrator to have been prepared for or distributed in commerce by the subject establishment. In such case, opportunity will be provided to the establishment owner or operator to present views to the Administrator within 30 days of the date of terminating the approval. In those instances where there is conflict of facts, a hearing, under applicable Rules of Practice, will be provided to the establishment owner or operator to resolve the conflict. The Administrator's termination of approval shall remain in effect pending the final determination of the proceeding.

(ii) If the establishment fails to comply with the quality control system or program to which it has agreed after being notified by letter from the Administrator or his designee. Prior to such termination, opportunity will be provided to the establishment owner or operator to present views to the Administrator within 30 days of the date of the letter. In those instances where there is a conflict of facts, a hearing, under applicable Rules of Practice, will be provided to the establishment owner or operator to resolve the conflict. The Administrator's termination of quality control approval shall remain in effect pending the final determination of the proceeding.

(3) If approval of the total plant quality control system or partial quality control program has been terminated in accordance with the provisions of this section, an application and request for approval of the same or a modified total plant quality control system will not be evaluated by the Administrator for at least 6 months from the termination date, or for at least 2 months from the termination date in the case of a partial quality control program.

(Secs. 5, 8, 21, 202, and 407 34 Stat. 1260, as amended, 21 U.S.C. 605, 608, 621, 642, and 677; 42 FR 35625, 35626, 35631)

PART 381—POULTRY PRODUCTS INSPECTION REGULATIONS

Further, § 381.145 of the poultry products inspection regulations (9 CFR 381.145) is amended as follows:

1. The paragraph designation "(c)" would be deleted and the present text of that paragraph (c) would be added to the end of paragraph (b) of that section.

2. New paragraphs (c), (d), (e), (f), and (g) would be added to read as follows:

§ 381.145 Poultry products and other articles entering or at official establishments; examination and other requirements.

* * * * *

(c) *Applying for Total Plant Quality Control.* Any owner or operator of an official establishment preparing poultry product who has a total plant quality control system or plan for controlling such products, after ante-mortem and post-mortem inspection, through all stages of preparation, may request the Administrator to evaluate it to determine whether or not that system is adequate to result in product being in compliance with the requirements of the Act and therefore qualify as a U.S. Department of Agriculture (USDA) Total Plant Quality Control Establishment. Such a request shall, as a minimum, include:

(1) A letter to the Administrator from the establishment owner or operator stating the company's basis and purpose for seeking an approved quality control system and willingness to adhere to the requirements of the system as approved by the Department; that all the establishment's data, analyses, and information generated by its quality control system will be maintained to enable the Department to monitor compliance and available to Department personnel; that plant quality control personnel will have authority to halt production or shipping of product in cases where the submitted quality control systems require it; and that the owner or operator (or his/her designee) will be available for consultation at any time Department personnel consider it necessary.

(2) In the case of an establishment having one or more full-time persons whose primary duties are related to the quality control system, an organizational chart showing that such people ultimately report to an establishment official whose quality control responsibilities are independent

of or not predominantly production responsibilities. In the case of a small establishment which does not have full-time quality control personnel, information indicating the nature of the duties and responsibilities of the person who will also be responsible for the quality control system.

(3) A list identifying those Subparts and sections of the poultry products inspection regulations which are applicable to the operations of the establishment applying for approval of a quality control system. This list shall also identify which part of the system will serve to maintain compliance with the applicable regulations.

(4) Detailed information concerning the manner in which the system will function. Such information should include, but not necessarily be limited to, questions of raw material control, the critical check or control points, the nature and frequency of tests to be made, the nature of charts and other records that will be used, the length of time such charts and records will be maintained in the custody of the official establishment, the nature of deficiencies the quality control system is designed to identify and control, the parameters of limits which will be used and the points at which corrective action will occur, and the nature of such corrective action—ranging from the least to most severe. *Provided,* That subsequent to approval of the total plant quality control system by the Administrator, the official establishment may produce a new product for test marketing provided labeling for the product has been approved by the Administrator, the inspector in charge has determined that the procedures for preparing the product will assure that all Federal requirements are met, and the production for test marketing does not exceed 6 months. Such new product shall not be produced at that establishment after the 6-month period unless approval of the quality control system for that product has been received from the Administrator.

(d) *Applying for Partial Quality Control.* Any owner or operator of an official establishment preparing poultry products who has a quality control program for a product, operation, or a part of an operation, may submit it to the Administrator and request a determination as to whether or not that program is adequate to result in product being in compliance with the requirements of the Act. Such a request shall, as a minimum, include:

(1) A letter from the establishment official responsible for quality control stating the objective of the program, and that all data and information generated by the program will be maintained to enable the Department to monitor compliance and available to Department personnel.

(2) Detailed information concerning raw material control, the critical check or control points, the nature and frequency of tests to be made, the charts and records that will be used, the length of time such charts and records will be maintained in the custody of the official establishment, the limits which will be used and the points at which corrective action will occur; and the nature of the corrective action—ranging from the least to the most severe.

(e) *Evaluation and Approval of Total Plant Quality Control or Partial Quality Control.* (1) The Administrator shall evaluate the material presented in accordance with the provisions of paragraph (c) or (d) of this section. If it is determined by the Administrator, on the basis of the evaluation, that the total quality control system or partial quality control program will result in finished products controlled in this manner being in full compliance with the requirements of the Act and regulation thereunder, the total quality control system or partial quality control program will be approved and plans will be made for implementation under departmental supervision.

(2) In any situation where the system or program is found by the Administrator to be unacceptable, formal notification shall be given to the applicant of the basis for the denial. The applicant will be afforded an opportunity to modify the system or program in accordance with this notification. The applicant shall also be afforded an opportunity to submit a written statement in response to this notification of denial and a right to request a hearing with respect to the merits or validity of the denial. If the applicant requests a hearing and the Administrator, after review of the answer, determines the initial determination to be correct, he shall file with the Hearing Clerk of the Department the notification, answer and the request for hearing, which shall constitute the complaint and answer in the proceeding, which shall thereafter be conducted in accordance with Rules of Practice which shall be adopted for this proceeding.

(3) The establishment owner or operator shall be responsible for the effective operation of the approved total plant quality control system or partial quality control program to assure compliance with the requirements of the Act and regulations thereunder. The Secretary shall continue to provide the Federal inspection necessary to carry out the responsibilities of the Act.

(f) *Labeling Logo.* Owners and operators of official establishments having a total plant quality control system approved under the provisions of paragraph (c) of this section, may only use, as a part of any labeling, the following logo. Any labeling bearing the logo and any wording of explanation with respect to this logo shall be approved as required by Subparts M and N of this Part.

(g) *Termination of Total Plant Quality Control or Partial Quality Control.* (1) The approval of a total plant quality control system or a partial quality control program may be terminated at any time by the owner or operator of the official establishment upon written notice to the Administrator.

(2) The approval of a total plant quality control system or partial quality control program may be terminated upon the establishment's receipt of a written notice from the Administrator under the following conditions:

(i) If adulterated or misbranded poultry product is found by the Adminstrator to have been prepared for or distributed in commerce by the subject establishment. In such case, opportunity will be provided to the establishment owner or operator to present views to the Administrator within 30 days of the date of terminating

the approval. In those instances where there is a conflict of facts, a hearing, under applicable Rules of Practice, will be afforded to the establishment owner or operator, if requested, to resolve the conflict, The Administrator's termination of approval shall remain in effect pending the final determination of the proceeding.

(ii) If the establishment fails to comply with the quality control system or program to which it has agreed after being notified by letter from the Administrator or his designee. Prior to such termination, opportunity will be provided to the establishment owner or operator to present views to the Adminstrator within 30 days of the date of the letter. In those instances where there is a conflict of facts, a hearing, under applicable Rules of Practice, will be afforded to the establishment owner or operator, if requested, to resolve the conflict. The Administrator's termination of quality control approval shall remain in effect pending the final determination of the proceeding.

(3) If approval of the total plant quality control system or partial quality control program has been terminated in accordance with the provisions of this section, an application and request for approval of the same or a modified total plant quality control system will not be evaluated by the Administrator for at least 6 months from the termination date, or for at least 2 months from the termination date in the case of a partial quality control program.

(Secs. 7, 11(b), 14, 16 and 22, 71 Stat. 441, as amended, 21 U.S.C. 456, 460(b), 463, 465, and 467d; 42 FR 35625, 35626, and 35631)

Done at Washington, D.C., on: August 12, 1980.

Carol Tucker Foreman,

Assistant Secretary for Food and Consumer Services.

[FR Doc. 80-24832 Filed 8-14-80; 8:45 am]

BILLING CODE 3410-DM

DEPARTMENT OF ENERGY

Economic Regulatory Administration

10 CFR Part 212

[Docket No. ERA-R-80-19]

Governor's Recommendation To Increase Retail Price Margin for Motor Gasoline

AGENCY: Economic Regulatory Administration, Department of Energy.

ACTION: Notice of ERA approval of Governor's recommendation.

SUMMARY: The Economic Regulatory Administration (ERA) announces Administrator Hazel R. Rollins' decision to adopt recommendations by Governor Victor Atiyeh of Oregon to increase the fixed cents per gallon price markup for retail sales of motor gasoline (retail price margin) by Oregon retail dealers by .7 cent per gallon to reflect inflation as measured by the GNP deflator and to provide for automatic adjustments of Oregon's retail margin when the national retail margin is adjusted for inflation. Accordingly, Administrator Rollins is ordering that the Oregon retail price margin be permanently set at 2.5 cents per gallon higher than the national retail price margin, so that the existing differential between the Oregon retail price margin and the national retail price margin will be maintained automatically whenever ERA raises the national retail price margin to reflect inflation.

EFFECTIVE DATE: June 15, 1980.

FOR FURTHER INFORMATION CONTACT:

Lynn Frank, Director, Oregon Department of Energy, Room 102, Labor and Industries Building, Salem, Oregon 97310, (503) 378-4040.

William Webb (Office of Public Information), Economic Regulatory Administrator, Room B-110, 2000 M Street, NW., Washington, D.C. 20461, (202) 653-4055.

Yvonne Allen, Economic Regulato y Administration, Room 4126, 2000 M Street, NW., Washington, D.C. 20461, (202) 252-5155.

SUPPLEMENTARY INFORMATION: On June 24, 1980, ERA published a Notice inviting comments on Governor Atiyeh's recommendation that ERA increase the Oregon retail price margin to reflect inflation, and that ERA provide hereafter for automatic increases in the Oregon retail price margin whenever ERA raises the national retail price margin to reflect inflation ("the Notice", 45 FR 43845, June 30, 1980). In the Notice, we explained Governor Atiyeh's recommendation and indicated that copies of a retail price analysis submitted by Governor Atiyeh in support of his recommendation would be available to the public. No comments were received with regard to Governor Atiyeh's proposal. ERA believes for the following reasons that an adjustment to the Oregon retail price margin of .7 cent per gallon, an amount equal to ERA's June 15, 1980 increase to the national retail price margin to reflect inflation as measured by the GNP deflator, is appropriate, and that in the future a differential of 2.5 cents per gallon should be maintained between the Oregon retail price margin and the national retail price margin.

As indicated in the Notice, the Oregon retail price margin was first increased to a level greater than the prevailing national retail price margin by Governor Atiyeh on June 19, 1979, pursuant to authority then delegated to the Governors of the States under 10 CFR 212.93. In connection with that increase of 2.5 cents per gallon, Governor Atiyeh provided ERA with a retail price analysis supporting his conclusion that, in accordance with the requirements of the existing regulations, the increase was cost justified by local economic conditions and that it furthered the objectives of the EPAA.

As further indicated in the Notice, on December 15, 1979, Governor Atiyeh made an additional adjustment to the Oregon retail price margin of .7 cent per gallon, in response to an equivalent increase in the national retail price margin to reflect inflation as measured by the GNP deflator. Thus, the 2.5 cent differential between the Oregon retail margin and the national retail margin, first established by Governor Atiyeh in June, 1979, has been preserved.

On May 19, 1980, the ERA amended 10 CFR 212.93 to provide that the ERA Administrator, instead of the Governor, may, upon the recommendation of the Governor of a State, increase the fixed cents per gallon markup for all or some of the retailers or reseller-retailers in the State. Accordingly, Governor Atiyeh submitted a recommendation to the ERA Administrator on June 13, 1980, requesting the ERA to approve an increase of .7 cent per gallon in the Oregon retail price margin, effective June 15, 1980. In his recommendation, the Governor indicated that his recommendation came in response to ERA's announcement of an increase in the national retail price margin of .7 cent per gallon, effective June 15, 1980, to reflect inflation, and his determination, based upon the economic factors set forth in his June 1979 retail price analysis, that the existing 2.5 cents per gallon differential between the Oregon margin and the national margin should be maintained. Accordingly, Governor Atiyeh also requested ERA to provide for automatic increases in the Oregon retail price margin whenever the national retail price margin is adjusted to reflect inflation.

ERA believes that the cost justification set forth in Governor Atiyeh's retail price analysis of 1979 demonstrates a continuing need based on Oregon's local economic conditions to maintain this differential. The ERA Administrator has therefore decided to adopt Governor Atiyeh's recommendation of a .7 cent per gallon

increase in the Oregon retail price margin, effective retroactively to June 15, 1980, the date on which an equivalent increase was made to the national retail price margin to reflect inflation.

In addition, ERA believes that the 2.5 cent differential between Oregon's retail price margin and the national retail price margin should be maintained for the foreseeable future. Therefore, the ERA Administrator has also decided to adopt Governor Atiyeh's recommendation that the Oregon retail price margin be automatically increased by amounts equal to any future increases in the national retail price margin to reflect inflation, by permanently setting the Oregon retail price margin at a level 2.5 cents per gallon higher than the prevailing national retail price margin.

(Emergency Petroleum Allocation Act of 1973, 15 U.S.C. § 751 *et seq.*, Pub. L. 93-159, as amended, Pub. L. 93-511, Pub. L. 94-99, Pub. L. 94-133, Pub. L. 94-163, and Pub. L. 94-385; Federal Energy Administration Act of 1974, 15 U.S.C. § 787 *et seq.*, Pub. L. 93-275, as amended, Pub. L. 94-332, Pub. L. 94-385, Pub. L. 95-70, and Pub. L. 95-91; Energy Policy and Conservation Act, 42 U.S.C. § 6201 *et seq.*, Pub. L. 94-163, as amended, Pub. L. 94-385, Pub. L. 95-70, Pub. L. 95-619, and Pub. L. 96-30; Department of Energy Organization Act, 42 U.S.C. 7101 *et seq.*, Pub. L. 95-91, Pub. L. 95-509, Pub. L. 95-619, Pub. L. 95-620, and Pub. L. 95-621; E.O. 11790, 39 FR 23185; E.O. 12009, 42 FR 46267)

In consideration of the foregoing, it is hereby ordered, effective June 15, 1980, that:

In the State of Oregon the fixed cents per gallon mark-ups described in 10 CFR 212.93(a)(2) shall be 2.5 cents higher than the mark-ups otherwise provided in that section.

Issued in Washington, D.C., August 11, 1980.

Hazel R. Rollins,

Administrator, Economic Regulatory Administration.

[FR Doc. 80-24859 Filed 8-14-80; 8:45 am]

BILLING CODE 6450-01-M

FEDERAL RESERVE SYSTEM

12 CFR Part 225

[Regulation Y, Docket No. R-0322]

Bank Holding Companies; Operations Subsidiaries

AGENCY: Board of Governors of the Federal Reserve System.

ACTION: Final interpretation.

SUMMARY: This interpretation provides that a bank holding company may form a subsidiary to perform services for its subsidiaries that the bank holding company could perform directly through a division or department.

EFFECTIVE DATE: August 11, 1980.

FOR FURTHER INFORMATION CONTACT: Bronwen Mason, Senior Attorney (202/452-3564), or Jennifer J. Johnson, Senior Attorney (202/452-3584), Legal Division, Board of Governors of the Federal Reserve System, Washington, D.C. 20551.

SUPPLEMENTARY INFORMATION: 12 CFR Part 225 is amended by adding a new § 225.141 to read as follows:

§ 225.141 Operations subsidiaries of a bank holding company.

In orders approving the retention by a bank holding company of a 4(c)(8) subsidiary, the Board has stated that it would permit, without any specific regulatory approval, the formation of a wholly-owned subsidiary of an approved 4(c)(8) company to engage in activities that such a company could itself engage in directly through a division or department. (*Northwestern Financial Corporation*, 65 Federal Reserve Bulletin 566 (1979).) Section 4(a)(2) of the Act provides generally that a bank holding company may engage directly in the business of managing and controlling banks and permissible nonbank activities, and in furnishing services directly to its subsidiaries. Even though section 4 of the Act generally prohibits the acquisition of shares of nonbanking organizations, the Board does not believe that such prohibition should apply to the formation by a holding company of a wholly-owned subsidiary to engage in activities that it could engage in directly. Accordingly, as a general matter, the Board will permit without any regulatory approval a bank holding company to form a wholly-owned subsidiary to perform servicing activities for subsidiaries that the holding company itself could perform directly or through a department or a division under section 4(a)(2) of the Act. The Board believes that permitting this type of subsidiary is not inconsistent with the nonbanking prohibitions of section 4 of the Act, and is consistent with the authority in section 4(c)(1)(C) of the Act, which permits a bank holding company, without regulatory approval, to form a subsidiary to perform services for its *banking* subsidiaries. The Board notes, however, that a servicing subsidiary established by a bank holding company in reliance on this interpretation will be an affiliate of the subsidiary bank of the holding company for the purposes of the lending restrictions of section 23A of the Federal Reserve Act. (12 U.S.C. 371c)

The Board has issued this interpretation pursuant to its statutory authority under sections 4(a)(2) and 5(b) of the Bank Holding Company Act, 12 U.S.C. 1843(a)(2) and 1844(b).

By order of the Board of Governors of the Federal Reserve System, August 7, 1980.

Theodore E. Allison,

Secretary of the Board.

[FR Doc. 80-24718 Filed 8-14-80; 8:45 am]

BILLING CODE 6210-01-M

FEDERAL DEPOSIT INSURANCE CORPORATION

12 CFR Part 303

Delegation of Authority To Suspend Time Deposit Withdrawal Penalties for Disaster Areas

AGENCY: Federal Deposit Insurance Corporation.

ACTION: Final rule.

SUMMARY: FDIC supervised banks are required to impose a penalty on a depositor for the withdrawal of a time deposit before maturity. Under current procedures, designated FDIC staff may suspend this penalty upon application from a bank for depositors who have suffered disaster-related losses in presidentially-declared disaster areas. FDIC is amending its regulations to permit the suspension of the penalty without requiring an application by a bank.

EFFECTIVE DATE: August 15, 1980.

FOR FURTHER INFORMATION CONTACT: F. Douglas Birdzell, Senior Attorney, Bank Regulation Section, Legal Division, Federal Deposit Insurance Corporation, 550 17th Street, N.W., Washington, D.C. 20429 (202-389-4324).

SUPPLEMENTARY INFORMATION: Under the regulations of the Federal Deposit Insurance Corporation ("FDIC", 12 CFR 329.4(d)) and the Depository Institutions Deregulation Committee (12 CFR 1204.103), FDIC supervised banks are required to impose minimum penalties on depositors for the withdrawal of time deposits before maturity. By a delegation from the Board of Directors of the FDIC, the Director of FDIC's Division of Bank Supervision, or his delegate, may suspend this penalty when a depositor has suffered a disaster-related loss in an area that has been declared a disaster area by presidential order. (12 CFR 303.11(a)(11)). This delegation, however, may not be exercised until a bank has applied for suspension of the penalty.

Requiring the prior application by a bank has made the suspension procedure awkward and slow to respond to presidentially-declared disasters. To expedite FDIC's response to major disasters, the FDIC is amending its regulations to remove the requirement that a bank apply for a suspension before any action may be taken.

Under the amendment, the Director of FDIC's Division of Bank Supervision, or his delegate, may permit FDIC-supervised banks to waive the penalty for the early withdrawal of deposit. This waiver may be given only if the President of the United States declares an area a major disaster area or an emergency area pursuant to section 301 of the Disaster Relief Act (42 U.S.C. 5141) and Executive Order No. 11795 of July 11, 1974. Any waiver will be limited to depositors who suffer disaster- or emergency-related losses in the officially designated disaster or emergency area. Normally, any suspension of the penalties will be retroactive to the date of the disaster and will remain in force for a period of six months; however, the suspension may be for a longer or shorter period depending on the particular case.

As was the procedure under the previous delegation, any suspension will permit depositors to withdraw, without penalty, all or part of their time deposits prior to maturity, with the consent of the bank. The suspension, being for the benefit of depositors, will apply whether or not a bank is actually located in a disaster area. Depositors seeking early withdrawal will be required to submit proof of loss occasioned by the particular disaster, absent actual knowledge of loss by a bank official.

Since the amendment is merely a change in internal FDIC operating procedures, it will have no effect on any insured bank. In particular, it will not affect the recordkeeping, reporting requirements, or competitive status of banks. (If elimination of the need for an application by a bank is viewed as having an effect on banks, it is a beneficial effect since it eliminates what may otherwise be viewed as a burden or restriction.) Therefore, FDIC has determined that a cost-benefit analysis (including a small bank impact statement) regarding the change is unnecessary.

The requirements of sections 553(b) and 553(d) of title 5 of the United States Code (5 U.S.C. 553 (b, d)) for public notice and comment and for deferred effective date were not followed in connection with the promulgation of the amendment, because this amendment involves internal FDIC procedures and in no way restricts or otherwise affects existing rights.

12 CFR Part 303 is amended by deleting § 303.11(a)(11) and adding a new § 303.13(k) as follows:

§ 303.11 [Amended].

1. In § 303.11 paragraph (a)(11) is deleted and reserved.

2. Section 303.13 is amended by adding a new paragraph (k) as follows:

§ 303.13 Other delegations of authority.

* * * * *

(k) *Suspension of time deposit withdrawal penalties for disaster areas.* The Board of Directors has delegated to the Director of the Division of Bank Supervision, or, where confirmed in writing by the Director of the Division of Bank Supervision, to the appropriate Regional Director, the authority to suspend the penalties contained in § 329.4(d) of the regulations of the FDIC (12 CFR 329.4(d)) and § 1204.103 of the regulations of the Depository Institutions Deregulation Committee (12 CFR 1204.103) and to allow FDIC supervised banks to permit the early withdrawal of time deposits, without penalty, if both of the following conditions are met:

(1) The President of the United States declares an area a major disaster area or an emergency area pursuant to section 301 of the Disaster Relief Act of 1974 (42 U.S.C. 5141) and Executive Order No. 11795 (July 11, 1974).

(2) The waiver is limited in effectiveness to depositors suffering disaster- or emergency-related losses in the officially designated disaster or emergency area.

(Sec. 9 "Seventh" and "Tenth", 64 Stat. 881 (12 U.S.C. 1819 "Seventh" and "Tenth"))

Dated: August 11, 1980.

By order of the Board of Directors.

Federal Deposit Insurance Corporation.

Hoyle L. Robinson,

Executive Secretary.

[FR Doc. 80-24727 Filed 8-14-80; 8:45 am]

BILLING CODE 6714-01-M

DEPARTMENT OF HEALTH AND HUMAN SERVICES

Food and Drug Administration

21 CFR Parts 510 and 555

Chloramphenicol Drugs for Animal Use; Chloramphenicol Oral Solution

AGENCY: Food and Drug Administration.

ACTION: Final rule.

SUMMARY: The animal drug regulations are amended to reflect approval of a new animal drug application (NADA) filed by Michael Gordon, Inc., providing for safe and effective use of a chloramphenicol oral solution for treating dogs for certain bacterial infections caused by organisms susceptible to chloramphenicol. The regulations are also amended to add the firm to the list of sponsors of approved NADA's.

EFFECTIVE DATE: August 15, 1980.

FOR FURTHER INFORMATION CONTACT: Sandra K. Woods, Bureau of Veterinary Medicine (HFV-114), Food and Drug Administration, 5600 Fishers Lane, Rockville, MD 20857, 301-443-3420.

SUPPLEMENTARY INFORMATION: Michael Gordon, Inc., P.O. Box 18091, San Francisco, CA 94118, filed an NADA (65-484) providing for use of chloramphenicol oral solution for treating dogs for bacterial pulmonary infections, urinary tract infections, enteritis, and infections associated with canine distemper that are caused by organisms susceptible to chloramphenicol.

This product conforms to the requirements for certification and conditions of marketing of chloramphenicol oral solution which are codified in 21 CFR 555.110c. Approval is based on submission of certain non-proprietary information and results of a crossover blood level study demonstrating bioequivalence to an approved oral solution.

Under 21 CFR 514.1(b)(9) an exemption from the submission of some of the information required by 21 CFR 514.1(b)(8) has been applied to this NADA.

The Bureau of Veterinary Medicine has determined, pursuant to 21 CFR 25.24(d)(1) (proposed December 11, 1979; 44 FR 71742), that this action is of a type that does not individually or cumulatively have a significant impact on the human environment. Therefore, neither an environmental assessment nor an environmental impact statement is required.

Michael Gordon, Inc., has not previously been included in the regulations under the list of approved sponsors. The regulations are amended to reflect this approval and to include this firm in the list of sponsors.

In accordance with the freedom of information provisions of Part 20 (21 CFR Part 20) and § 514.11(e)(2)(ii) (21 CFR 514.11(e)(2)(ii)), a summary of safety and effectiveness data and information submitted to support approval of this application may be seen in the office of the Hearing Clerk (HFA-305), Food and Drug Administration, Rm. 4-62, 5600 Fishers Lane, Rockville, MD

20857, from 9 a.m. to 4 p.m., Monday through Friday.

Therefore, under the Federal Food, Drug, and Cosmetic Act (sec. 512(i) and (n), 82 Stat. 347, 350–351 (21 U.S.C. 360b(i) and (n))) and under authority delegated to the Commissioner of Food and Drug (21 CFR 5.1) and redelegated to the Bureau of Veterinary Medicine (21 CFR 5.83), Parts 510 and 555 are amended as follows:

PART 510—NEW ANIMAL DRUGS

1. In part 510, § 510.600 is amended by adding a new sponsor alphabetically to paragraph (c)(1) and numerically to paragraph (c)(2) to read as follows:

§ 510.600 Names, addresses, and drug labeler codes of sponsors of approved applications.

* * * * *

(c) * * *

(1) * * *

Firm name and address	Drug labeler code
* * * * *	
Michael Gordon, Inc., P.O. Box 18091, San Francisco, CA 94118.	049047
* * * * *	

(2) * * *

Drug labeler code	Firm name and address
* * * * *	
049047	Michael Gordon, Inc., P.O. Box 18091, San Francisco, CA 94118.
* * * * *	

PART 555—CHLORAMPENICOL DRUGS FOR ANIMAL USE

2. In Part 555, § 555.110c is amended by revising paragraph (c)(2) to read as follows:

§ 555.110c Chloramphenicol oral solution

* * * * *

(c) * * *

(2) *Sponsor.* See 000010, 000196, 010271, 012518 and 049047 in § 510.600(c) of this chapter.

* * * * *

Effective date. This amendment is effective August 15, 1980.

(Sec. 512(i) and (n), 82 Stat. 347, 350–351 (21 U.S.C. 360b(i) and (n)))

Dated: August 8, 1980.

Gerald B. Guest,

Acting Director, Bureau of Veterinary Medicine.

[FR Doc. 80-24665 Filed 8-14-80; 8:45 am]

BILLING CODE 4110-03-M

---

21 CFR Parts 510 and 558

Tylosin; New Animal Drugs for Use in Animal Feeds

AGENCY: Food and Drug Administration

ACTION: Final rule

SUMMARY: The Food and Drug Administration (FDA) is amending the animal drug regulations to reflect approval of a supplemental new animal drug application (NADA) filed for J & R Specialty Supply Co. providing for a change of sponsor from Dean Specialty Supply Co. The NADA provides for use of a 5- and 10-gram-per-pound tylosin premixes for making complete swine feeds.

EFFECTIVE DATE: August 15, 1980.

FOR FURTHER INFORMATION CONTACT: Jack C. Taylor, Bureau of Veterinary Medicine (HFV-136), Food and Drug Administration, 5600 Fishers Lane, Rockville, MD 20857, 301-443-5247.

SUPPLEMENTARY INFORMATION: J & R Specialty Supply Co., 310 Second Ave., SW., P.O. Box 506, Waseka, MN 56093, is sponsor of supplemental NADA 96-780 submitted on its behalf by Elanco Products Co. The supplement provides for the change of sponsor from Dean's Specialty Supply Co. to J & R Specialty Supply Co. The NADA provides for use of a premix containing 5 or 10 grams of tylosin (as tylosin phosphate) per pound for making complete swine feeds used to increase rate of weight gain and improve feed efficiency.

Approval of the original NADA relies on safety and effectiveness data contained in Elanco Product Co.'s approved NADA 12-491. Use of the data in NADA 12-491 to support this NADA has been authorized by Elanco. This action, the change of sponsor of an NADA, does not involve changes in manufacturing facilities, equipment, procedures, or personnel. Under the Bureau of Veterinary Medicine's proposed supplemental approval policy (December 23, 1977, 42 FR 64367), approval of this action did not require a reevaluation of the safety and effectiveness data in the parent application.

J & R Specialty Supply Co. has not previously been included in the regulations under the list of approved sponsors. The regulations are amended to reflect this approval, to delete Dean's Specialty Supply Co. from the list of sponsors, and to include J & R Specialty Supply Co. in the list of sponsors.

Therefore, under the Federal Food, Drug, and Cosmetic Act (sec. 512(i), 82 Stat. 347 (21 U.S.C. 360b(i))) and under authority delegated to the Commissioner of Food and Drugs (21 CFR 5.1) and redelegated to the Bureau of Veterinary Medicine (21 CFR 5.83), Parts 510 and 558 are amended as follows:

PART 510—NEW ANIMAL DRUGS

1. In Part 510, § 510.600 is amended by deleting the entry for Dean's Specialty Supply Co. from paragraph (c)(1) and the entry for 024817 from paragraph (c)(2), and adding a new sponsor entry alphabetically to paragraph (c)(1) and numerically to paragraph (c)(2) to read as follows:

§ 510.600 Names, addresses, and drug labeler codes of sponsors of approved applications.

* * * * *

(c) * * *

(1) * * *

Firm name and address	Drug labeler code
* * * * *	
J & R Specialty Supply Co., 310 Second Ave., SW., P.O. Box 506, Waseca, MN 56093.	049768
* * * * *	

(2) * * *

Drug labeler code	Firm name and address
*	
*	
*	
*	
*	
049768	J & R Supply Co., 310 Second Ave., SW., P.O. Box 506, Waseca, MN 56093.
*	
*	
*	
*	
*	

PART 558—NEW ANIMAL DRUGS FOR USE IN ANIMAL FEEDS

2. In Part 558, § 558.625 is amended by revising paragraph (b)(16) to read as follows:

§ 558.625 Tylosin.

* * * * *

(b) * * *

(16) To 049768: 5 and 10 grams per pound; paragraph (f)(1)(vi)(*a*) of this section.

* * * * *

Effective date. August 15, 1980.

(Sec. 512(i), 82 Stat. 347 (21 U.S.C. 360b(i)))

Dated: August 7, 1980.

Robert A. Baldwin,

Associate Director for Scientific Evaluation.

[FR Doc. 80-24673 Filed 8-14-80; 8:45 am]

BILLING CODE 4110-03-M

21 CFR Part 540

Sterile Benzathine Penicillin G Suspension; Penicillin Antibiotic Drugs for Animal Use

AGENCY: Food and Drug Administration.

ACTION: Final rule.

SUMMARY: The Food and Drug Administration (FDA) is amending the animal drug regulations for sterile benzathine penicillin G suspension to indicate those conditions of use for which applications for approval of identical products need not include certain types of effectiveness data. These conditions of use were classified as effective as a result of a National Academy of Science/National Research Council (NAS/NRC) Drug Efficacy Study Group evaluation of the product. In lieu of certain effectiveness data, approval may require submission of bioequivalence or similar data. An earlier Federal Register publication reflected this product's compliance with the conclusions of the review.

EFFECTIVE DATE: August 15, 1980.

FOR FURTHER INFORMATION CONTACT: Henry C. Hewitt, Bureau of Veterinary Medicine (HFV-110), Food and Drug Administration, 5600 Fishers Lane, Rockville, MD 20857, 301-443-3420.

SUPPLEMENTARY INFORMATION: The NAS/NRC (the Academy) review of this product was published in the Federal Register of August 26, 1970 (35 FR 13589). In that document, the Academy concluded, and FDA concurred, that the product was probably effective for treating infections in cattle, sheep, swine, dogs, and turkeys when such infections are caused by pathogens sensitive to the antibiotic.

That annoucement was published to inform holders of new animal drug applications (NADA's) of the findings of the Academy and the agency, and to inform all interested persons that such articles could be marketed if they were the subject of approved NADA's and otherwise complied with the requirements of the Federal Food, Drug, and Cosmetic Act.

Wyeth Laboratories, Division of American Home Products Corp., P.O. Box 8299, Philadelphia, PA 19101, responded to the notice by submitting an NADA (55-009V) providing current information covering manufacturing and controls and revising the labeling for the safe and effective use of the product for the treatment of certain infections in dogs and horses caused by organisms susceptible to the antibiotic. The application was approved by a regulation published in the Federal Register of July 24, 1974 (39 FR 26890). The regulation reflecting this approval amended the regulations to establish a new § 135b.98 (21 CFR 135b.98), recodified at 21 CFR 540.255a. The section did not specify those conditions of use that were NAS/NRC approved.

This document amends the regulations to indicate those conditions of use for which applications for approval of identical products need not include certain types of effectiveness data required for approval by § 514.111(a)(5)(ii)(*a*)(*4*) of the new animal drug regulations. In lieu of those data, approval of applications for such products may be obtained if bioequivalency or similar data are submittd as suggested in the guideline for submitting NADA's for generic drugs reviewed by the NAS/NRC. The guideline is available from the office of the Hearing Clerk (HFA-305), Food and Drug Administration, Rm. 4-62, 5600 Fishers Lane, Rockville, MD 20857.

Therefore, under the Federal Food, Drug, and Cosmetic Act (sec. 512(i), 82 Stat. 347 (21 U.S.C. 360b(i))) and under authority delegated to the Commissioner of Food and Drugs (21 CFR 5.1) and redelegated to the Bureau of Veterinary Medicine (21 CFR 5.83), Part 540 is amended in § 540.255a by adding after paragraph (c)(3)(i), (ii), (iii), and (iv) the footnote reference "[1]" and by adding at the end of the section the footnote to read as follows:

§ 540.255a Sterile benzathine penicillin G suspension.

* * * * *

(c) * * *

(3) *Conditions of use.* (i) * * * [1]

(ii) * * * [1]

(iii) * * * [1]

(iv) * * * [1]

Effective date. This regulation is effective August 15, 1980.

(Sec. 512(i), 82 Stat. 347 (21 U.S.C. 360b(i)))

[1] These conditions are NAS/NRC reviewed and deemed effective. Applications for these uses need not include effectiveness data as specified in § 514.111 of this chapter, but may require bioequivalency and safety information.

Dated: August 8, 1980.

Gerald B. Guest,

Acting Director, Bureau of Veterinary Medicine.

[FR Doc. 80-24664 Filed 8-14-80; 8:45 am]

BILLING CODE 4110-03-M

DEPARTMENT OF JUSTICE

Drug Enforcement Administration

21 CFR Part 1306

Modification of the Procedure for Partial Filling of Prescriptions for Schedule II Controlled Substances

AGENCY: Drug Enforcement Administration, Justice.

ACTION: Final rule.

SUMMARY: This rule permits the partial filling of prescriptions for Schedule II controlled substances and extends the current 72 hour time limit to a period of 60 days, if the prescriptions are written for patients in Long Term Care Facilities. This action was initiated upon request from various pharmacy professionals and organizations that current regulations be modified to permit pharmacies to partially fill prescriptions for Schedule II controlled substances issued to patients in Long Term Care Facilities (LTCF). This rule should reduce the health care costs to such patients by limiting the amounts of controlled substances which might otherwise accumulate at Long Term Care Facilities and still provide DEA sufficient accountability information to monitor against diversion.

EFFECTIVE DATE: September 15, 1980.

FOR FURTHER INFORMATION CONTACT: Mr. Ronald W. Buzzeo, Chief, Compliance Division, Office of Compliance and Regulatory Affairs, Drug Enforcement Administration, 1405 I Street, Northwest, Washington, D.C. 20537, telephone number (202) 633-1321.

SUPPLEMENTARY INFORMATION: On April 3, 1980, the Administrator of the Drug Enforcement Administration issued a Notice of Proposed Rulemaking (45 FR 24199, April 9, 1980) to modify existing regulations to permit the partial filling of Schedule II controlled substances prescriptions provided that they be issued to patients in Long Term Care Facilities.

The Notice called for responsive comments and objections to be submitted to DEA on or before May 12, 1980. DEA received a total of seven submissions in response to the Notice.

The State of Pennsylvania, Department of Health and the American Society of Hospital Pharmacists and

four other commentors supported the proposed modification. The State of Rhode Island, Department of Health objected that the rule would encourage practitioners to issue fewer prescriptions for larger amounts of controlled substances, and would weaken the effect of regulations of the state of Rhode Island which work to monitor the filling of prescriptions for Schedule II controlled substances.

The DEA carefully considered the objections submitted by the Rhode Island Department of Health, DEA does not intend to burden the effectiveness of existing state regulations which have been established to monitor the prescribing and dispensing of Schedule II controlled substances. In all cases, the more stringent law or regulation is applicable and DEA does not feel that the implementation of this proposed modification would reduce the effectiveness of existing state regulations.

The State of North Carolina, Department of Human Resources submitted a responsive comment in support of this proposed rule and recommended that DEA state in the final rule that the total quantity of Schedule II controlled substances dispensed in all partial fillings must not exceed the total quantity prescribed. The DEA has accepted this suggestion, and has incorporated it into this Final Rule.

Two commentors submitted suggestions which DEA considered and accepted in part. These comments suggested: (1) Extending the 60 day time limitation for refills; (2) permitting oral authorizations if followed by a written prescription; and (3) eliminating the requirement of a notation on the prescription authorizing partial filling. DEA rejects the first two suggestions but accepts the third and issues this Final Rule absent such requirement.

No further comments or objections were received, nor were there any requests for a hearing.

Therefore, pursuant to the authority vested in the Administrator by the Controlled Substances Act (21 U.S.C. 801 *et seq.)* and by regulations of the Department of Justice, the Administrator hereby orders that 21 CFR Part 1306 be amended:

(1) By redesignating paragraphs (e) through (g) of § 1306.02 as paragraphs (f) through (h), and by adding a new paragraph (e) to read as follows:

§ 1306.02 Definitions.

* * * * *

(e) A "Long Term Care Facility" (LTCF) means a nursing home, retirement care, mental care or other facility or institution which provides extended health care to resident patients.

* * * * *

(2) by revising § 1306.13 as follows:

In § 1306.13, the existing paragraph is designated as paragraph (a), and the following paragraph (b) and (c) are added:

§ 1306.13 Partial filling of prescriptions.

* * * * *

(b) Prescriptions for Schedule II controlled substances written for patients in Long Term Care Facilities (LTCF) may be filled in partial quantities, to include individual dosage units. For each partial filling, the dispensing pharmacist shall record on the back of the prescription (or on another appropriate record, uniformly maintained, and readily retrievable) the date of the partial filling, quantity dispensed, remaining quantity authorized to be dispensed and the identification of the dispensing pharmacist. The total quantity of Schedule II controlled substances dispensed in all partial fillings must not exceed the total quantity prescribed. Schedule II prescriptions, for patients in a LTCF, shall be valid for a period not to exceed 60 days from the issue date unless sooner terminated by the discontinuance of medication.

(c) Information pertaining to current Schedule II prescriptions for patients in a LTCF may be maintained in a computerized system if this system has the capability to permit:

(1) Output (display or printout) of the original prescription number, date of issue, identification of prescribing individual practitioner, identification of patient, identification of LTCF, identification of medication authorized (to include dosage form strength and quantity), listing of partial fillings that have been dispensed under each prescription and the information required in § 1306.13(b).

(2) Immediate (real time) updating of the prescription record each time a partial filling of the prescription is conducted.

(3) Retrieval of partially filled Schedule II prescription information is the same as required by § 1306.22(b) (4) and (5) for Schedule III and IV prescription refill information.

Dated: August 7, 1980.

Peter B. Bensinger,

Administrator.

[FR Doc. 80-24726 Filed 8-14-80; 8:45 am]

BILLING CODE 4410-09-M

DEPARTMENT OF HOUSING AND URBAN DEVELOPMENT

Office of the Assistant Secretary for Housing—Federal Housing Commissioner

24 CFR Parts 803 and 888

[Docket No. R-80-749]

Sections 8 and 23 Housing Assistance Payments Programs—Amendment of Fair Market Rent Schedules, Existing Housing; Correction

AGENCY: Department of Housing and Urban Development (HUD).

ACTION: Correction of final rule.

SUMMARY: In FR Doc. R-80-749 appearing at page 19868 in the Federal Register of Wednesday, March 26, 1980, HUD amended the schedules that set forth the Fair Market Rents (FMRs)/ Section 23 and Section 8 for Existing Housing and for Mobile Home Spaces under the Housing Assistance Payments Programs (pages 19869 through 20023). The amended schedules contained several errors. For fourteen housing market areas, the proposed Fair Market Rents were republished instead of the revised rents. The Fair Market Rents established for Mobile Home Spaces in fifteen market areas were inadvertently omitted from the schedule, and the Fair Market Rent for Mobile Home Spaces applicable to San Luis Obispo County, California was listed incorrectly under the San Francisco Area Office jurisdiction instead of that of the Los Angeles Area Office. These errors, applicable to selected housing market areas, are corrected by revision of Title 24, Part 803, Schedule B, and Part 888, Schedule B and Schedule D, as set forth below.

EFFECTIVE DATE: September 15, 1980, retroactive to March 29, 1980 only for purposes of computing annual rent adjustments in accordance with regular procedures and the PHA administrative fees.

FOR FURTHER INFORMATION CONTACT: Ellis V. St. Clair, Economist, Economic and Market Analysis Division, PD&R, HUD, Washington, D.C. 20410, 202-755-5816. This is not a toll-free number.

SUPPLEMENTARY INFORMATION: The corrections provided for herein respond to comments submitted on earlier publications of Fair Market Rent Schedules. Moreover, it is imperative that the corrections become effective as soon as possible in order to facilitate the provision of urgently needed rental assistance to owners of existing housing units assisted under these programs.

Therefore, the Secretary finds that prior notice and public procedure on these corrections would be unnecessary, impracticable and contrary to the public interest.

A Finding of Inapplicability of Environmental Impact is available for public inspection in the Office of the Rules Docket Clerk, Room 5218, Dept. of Housing & Urban Development.

This rule is not listed in the Department's semiannual agenda of significant rules, published pursuant to Executive Order 12044.

(Section 7(d) Department of HUD Act, 42 U.S.C. 3535(d).)

Issued at Washington, D.C., August 8, 1980.

Lawrence B. Simons,

Assistant Secretary for Housing—Federal Housing Commissioner.

Accordingly, Title 24, Part 803, Schedule B and Part 888, Schedule B and Schedule D are amended as set forth below.

1. The FMRs listed below hereby supersede those listed in part 803, schedule B and part 888, schedule B published in the Federal Register on Mar. 26, 1980:

U.S. Department of Housing and Urban Development Section 8 and 23 Housing Assistance Payments Programs

Schedule B.—*Fair Market Rents for Existing Housing (Including Housing Finance and Development Agencies Program)*

	Bedrooms				
	0	1	2	3	4
Region 5					
Chicago, Ill. area office—non-SMSA: Jefferson County, Ill	170	225	275	300	340
Columbus, Ohio area office—non-SMSA:					
Harrison County, Ohio	138	169	199	230	261
Gallia County, Ohio	138	169	199	230	261
Indianapolis, Ind. area office—non-SMSA: Knox County, Ind	163	182	219	231	269
Region 6					
Dallas, Tex. area office—non-SMSA: Bryan-College Station, Tex.: Brazos County, Tex	202	230	270	310	351
Little Rock, Ark. area office—non-SMSA:					
Cleburne County, Ark	138	169	199	230	261
Fulton County, Ark	138	169	199	230	261
Independence County, Ark	138	169	199	230	261
Izard County, Ark	138	169	199	230	261
Sharp County, Ark	138	169	199	230	261
Stone County, Ark	138	169	199	230	261
Van Buren County, Ark	138	169	199	230	261
Region 8					
Denver, Colo. regional/area office—non-SMSA: Garfield County, Colo	220	268	315	362	410
Region 9					
Los Angeles, Calif. area office—non-SMSA: Coconino County, Ariz	199	237	312	379	429

2. The FMRs listed below are hereby added to part 888, schedule D published in the Federal Register on Mar. 26, 1980:

Schedule D.—*Fair Market Rents for Mobile Home Spaces (Section 8 Existing Housing Program)*

	Wide space	
	Single	Double
Region 1		
Boston, Mass. area office—non-Metro State: New Hampshire	73	80
SMSA:		
Lawrence-Haverhill, Mass.-N.H	86	92
Lowell, Mass.-N.H	86	92
Hartford, Conn. area office—SMSA:		
Bristol Conn	90	90
Norwalk Conn	105	105
Stamford Conn	105	105
Waterbury Conn	90	90
Region 2		
New York, N.Y. area office—SMSA:		
Nassau-Suffolk, N.Y	116	148
New York City, N.Y.-N.J	120	120
Poughkeepsie, N.Y	110	110
Newark, N.J. area office—SMSA:		
New York City, N.Y.-N.J	120	120
Newark, N.J	140	145
Philadelphia, Pa.-N.J	130	130
Region 3		
Philadelphia, Pa. area office—SMSA:		
Harrisburgh, Pa.-N.J	76	76
Philadelphia, Pa.-N.J	130	130

3. The FMR listed in part 888, schedule D for region 9, San Francisco area office, pertaining to San Luis Obispo County is hereby deleted and the correct listing for San Luis Obispo County under the Los Angeles, Calif. area office is added as follows:

	Wide space	
	Single	Double
Region 9		
Los Angeles, Calif. area office—Exception County San Luis Obispo	109	136

(Prepared by HUD—EMAD (CO), May 27, 1980.)

[FR Doc. 80-24639 Filed 8-14-80; 8:45 am]

BILLING CODE 4210-01-M

DEPARTMENT OF THE INTERIOR

Bureau of Indian Affairs

25 CFR Part 231

Colorado River Irrigation Project, Arizona; Revision of Rates and Procedures

AGENCY: Bureau of Indian Affairs, Interior.

ACTION: Final rule.

SUMMARY: The purpose of the Final Rule is to increase the four power rate schedules (§ 231.51 Rate Schedule No. 1—Residential Rate, § 231.52 Rate Schedule No. 2—Commercial Rate, § 231.53 Rate Schedule No. 3—Irrigation Pumping Rate and § 231.54 and Rate Schedule No. 4—Street and Area Lighting). The rate increase is necessary to provide operation and maintenance funds, a reserve fund and funds for repayment of Government appropriations. There has been a continuous inflation rate of 9 to 12 percent in the cost of material and labor during the past year and in October, 1980 the purchased power rates from Department of Energy will be increased and Arizona Public Service increased their power rates on February 1, 1980 subject to refund if it is not approved by the Federal Energy Regulatory Commission.

The projected operating revenues for 1980 are $4,078,600 and the projected operating expenses are $4,253,200, this leaves a deficit of $174,600. To eliminate this deficit and place the Power Unit on a sound financial basis it is necessary to increase the power rates an average of 6.6 percent. The residential rates would increase an average of 5.8%, commercial rates 7.0%, Irrigation Rates 8.3% and Street and Private area Lights 3.2%. These rates have been figured as closely as possible to reflect the cost of service provided to each class of customer.

DATE: These revisions shall become effective September 1, 1980.

FOR FURTHER INFORMATION CONTACT: Vernon M. Hughes, Bureau of Indian Affairs, Colorado River Indian Agency, Parker, Arizona 85344, Telephone Number 602-669-2187.

SUPPLEMENTARY INFORMATION: Beginning on Page 43219 of the Thursday, June 26, 1980 Federal Register, Volume 45, No. 125 there was published a proposed rule. All interested persons were given until August 1, 1980 to submit comments regarding the proposed rule. No comments were received regarding the proposed rule.

The principal author of this document is Vernon M. Hughes, Bureau of Indian Affairs, Colorado River Indian Agency, Route 1, Box 9C, Parker, Arizona 85344.

(Section 3.1, 10 BIAM: Section 2, 49 Stat. 1039; 54 Stat. 422; 5 U.S.C. 301.)

Part 231, Subchapter U, Chapter 1, of Title 25, of the Code of Federal Regulations is amended as follows:

1. Section 231.51 Revised to read as follows:

§ 231.51 Rate Schedule No. 1—Residential.

(a) *Application of Schedule.* This schedule applies to electrical service required for residential purposes in individual private dwellings and in individualy metered apartments delivered through one meter to a customer at one premises either urban or rural, for domestic use only. The electrical service is to be used on the customer's own premises only and must not be resold.

(b) *Type of Service.* Single phase, 60 cycle, 120/240 volts.

(c) *Monthly Rate.* (1) $7.67 for the first 100 kilowatt-hours or less. (2) 5.7 cents per kilowatt-hour for the next 300 kilowatt-hours. (3) 5.0 cents per kilowatt-hour for the next 800 kilowatt-hours. (4) 4.0 cents per kilowatt-hour for all additional kilowatt-hours.

(d) *Fuel Cost Adjustment.* An adjustment shall be added to each kilowatt-hour used equal to the estimated average Purchased Power Adjustment (rounded to the nearest $.0001) paid by the Project to the Project's power supplier.

2. Section 231.52 Revised to read as follows:

§ 231.52 Rate Schedule No. 2—Commercial Rate.

(a) *Application of Schedule.* This schedule applies to electrical service required by commerical, industrial and off-reservation irrigation pumping, for all uses when such service is supplied at one point of delivery and measured through one meter. The electrical service is to be used on the customer's own premises only and must not be resold.

(b) *Type of Service.* Single or three phase, 60 cycle, at one standard voltage (120/240, 120/208, 270/480 or 480 volts).

(c) *Monthly Rates.* (1) $7.67 for the first 100 kilowatt-hours. (2) 5.6 cents per kilowatt-hour for the next 900 kilowatt-hours. (3) 4.7 cents per kilowatt-hour for the next 4,000 kilowatt-hours. (4) 3.7 cents per kilowatt-hour for all additional kilowatt-hours.

(d) *Demand Charge.* (1) No charge for the first 5 kilowatts. (2) $3.30 per kilowatt for all billing demand over 5 kilo-watts.

(e) *Minimum Charge.* (1) $9.81 per month or $3.30 per kilowatt of billing demand for billing demands over 5 kilowatts or the amount specified in the contract, whichever is greater, except where the Officer in Charge determines that the customer's requirements are of a distictly recurring seasonal nature. Then the minimum monthly bill shall not be more than an amount sufficient to make the total charges for the twelve (12) months ending with the current month equal to twelve (12) times the highest monthly minimum computed for the same twelve (12) month period.

(f) *Billing Demand.* The highest 15 minutes integrated demand in kilowatts occurring during the month or the demand specified in a contract, whichever is greater.

(g) *Fuel Cost Adjustment.* An adjustment shall be added to each kilowatt-hour used equal to the estimated average Purchased Power Adjustment (rounded to the nearest $.0001) paid by the Project to the Project's power supplier.

3. Section 231.53 Revised to read as follows:

§ 231.53 Rate Schedule No. 3—Irrigation Pumping Rate.

(a) *Application of Schedules.* This schedule applies to electrical service required for pumping of irrigation water, for irrigation systems located on the reservation, when such service is supplied at one point of delivery and consumption is measured through one meter and is approved by the Officer in Charge. Use must be limited to the customer's premises and must not be sold.

(b) *Type of Service.* Single or three phase, 60 cycle at one standard voltage (120/240, 120/208, 270/480 or 480 volts).

(c) *Monthly Rate.* (1) Energy Charge. 2.2 cents per kilowatt-hour. (2) Demand Charge. $2.00 per kilowatt of billing demand. (3) Minimum Charge. $2.00 per kilowatt of billing demand or contract demand whichever is the greater.

4. Section 231.54 Revised to read as follows:

§ 231.54 Rate Schedule No. 4—Street and Area Lighting.

(a) *Application of Schedule.* This rate schedule applies to service lighting public streets, alleys, thoroughfares, public parks, school yards, industrial areas, parking lots and similar areas where dusk-to-dawn service is desired. The Project will own, operate and maintain the lighting system, including normal lamp and globe replacement.

(b) *Monthly Rate.*

Per Lamp			
Lamps	*Metered*	*Unmetered*	*KWH/MO*
(1) 175 Watts, Mercury Vapor, (Approximately 6,500 Lumens)....	5.90	7.10	61
(2) 250 Watt, Mercury Vapor, (Approximately 10,000 Lumens)..	7.45	9.05	88
(3) 400 Watt, Mercury Vapor, (Approximately 18,000 Lumens)..	10.10	12.90	140

(c) *Minimum Term of Service.* The minimum term of service will be twelve (12) months, payable in advance. This advance payment may be waived by the Officer in Charge.

(d) *Installation Charges.* The customer will be required to pay the total installation cost including labor and material as determined by the Officer in Charge. Ownership of all facilities will remain with the Project.

(e) *Fuel Cost Adjustment.* An adjustment shall be added to each kilowatt-hour used equal to the estimated average Purchased Power Adjustment (rounded to the nearest $.0001) paid by the Project to the Project's power supplier.

Note.—The Assistant Secretary—Indian Affairs has determined that this document does not contain a major proposal requiring preparation of an Inflation Impact Statement under Executive Order 11821 and OMB Circular No. A-107.

W. P. Ragsdale,

Assistant Area Director

[FR Doc. 80-24607 Filed 8-14-80; 8:45 am]

BILLING CODE 4310-02-M

DEPARTMENT OF LABOR

Occupational Safety and Health Administration

29 CFR Parts 1910 and 1913

Access to Employee Exposure and Medical Records; Corrections

AGENCY: Occupational Safety and Health Administration, Department of Labor.

ACTION: Final rule; corrections.

SUMMARY: On May 23, 1980, OSHA published two documents in the Federal Register relating to access to employee exposure and medical records: (1) Access to Employee Exposure and Medical Records (FR Doc. 80-15389; 45 FR 35212); and (2) Rules of Agency Practice and Procedure Concerning OSHA Access to Employee Medical Records (FR Doc. 80-15390; 45 FR 35284). This notice lists corrections to these documents, which are intended to correct typographical errors.

EFFECTIVE DATE: August 21, 1980.

FOR FURTHER INFORMATION CONTACT: Mr. James F. Foster, Department of Labor, OSHA, Office of Public Affairs, Third Street and Constitution Avenue NW., Room N-3641, Washington, DC 20210. (202-523-8151).

SUPPLEMENTARY INFORMATION:

I. Federal Register Document 80-15389, appearing at 45 FR 35212, is corrected as follows:

1. On page 35213, column 1, line 31, change "information" to "protection."
2. On page 35214, column 2, line 26, change "record" to "records."
3. On page 35215, column 2, line 42, change "access" to "assess."
4. On page 35217, column 1, line 3, change "additon" to "addition."
5. On page 35219, column 3, line 16, change "the" to "The."
6. On page 35220, column 3, line 67, change "proceding" to "proceeding."
7. On page 35223, column 2, line 36, change "and" to "an."
8. On page 35223, column 2, line 64, change "and" to "an."
9. On page 35223, column 3, line 2, change "or" to "of."
10. On page 35225, column 2, line 15, change "maganese" to "manganese."
11. On page 35225, column 3, line 54, change "Dr. Silvertein" to "Dr. Silverstein."
12. On page 35227, column 3, line 40, change "direct" to "detect."
13. On page 35228, column 2, line 31, change "needs to" to "needs of."
14. On page 35228, column 3, line 12, change "disgnoses" to "diagnoses."
15. On page 35232, column 2, line 22, change "phsyical" to "physical."
16. On page 35232, column 3, line 27, change "promulation" to "promulgation."
17. On page 35236, column 3, line 17, change "emplyees'" to "employees'."
18. On page 35237, column 1, line 20, change "possibilty" to "possibility."
19. On page 35238, column 2, line 62, change "AFC-CIO" to "AFL-CIO."
20. On page 35241, column 1, line 14, change "consent" to "content."
21. On page 35241, column 3, line 25, change "identificable" to "identifiable."
22. On page 35241, column 3, line 33, change "identifers" to "identifiers."
23. On page 35242, column 3, line 12, change "physcian" to "physician."
24. On page 35243, column 1, line 27, change "rcord" to "record."
25. On page 35245, column 1, line 52, change "Eudcation" to "Education."
26. On page 35246, column 2, line 44, change "emphasized" to "emphasizes."
27. On page 35248, column 2, line 37, change "no" to "not."
28. On page 35248, column 3, line 28, change "recognizes" to "recognize."
29. On page 35250, column 3, line 4, change "in" to "is."
30. On page 35251, column 1, line 52, delete the comma after "personally."
31. On page 35253, column 2, line 8, change "cite" to "cited."
32. On page 35253, column 3, line 2, change "feasibility" to "feasible."
33. On page 35258, column 2, line 36, change "records" to "record."
34. On page 35259, column 3, line 52, change "simultaneouly" to "simultaneously."
35. On page 35259, column 3, line 69, change "exisiting" to "existing."
36. On page 35260, column 2, line 61, change "Similarily" to "Similarly."
37. On page 35260, column 3, line 15, change "on" to "in."
38. On page 35260, column 3, line 60, change "enterests" to "interests."
39. On page 35261, column 1, line 52, change "encapacitated" to "incapacitated."
40. On page 35261, column 1, line 59, change "legallly" to "legally."
41. On page 35262, column 1, line 58, change "if" to "of."
42. On page 35263, column 1, line 41, change "stricyly" to "strictly."
43. On page 35263, column 2, line 48, change "recognized" to "recognize."
44. On page 35270, column 1, line 28, change "stardard" to "standard."
45. On page 35271, column 1, line 7, change "suggest" to "suggests."
46. On page 35271, column 1, line 21, change "ARMA" to "AMRA."
47. On page 35273, column 3, line 51, change "acess" to "access."
48. On page 35274, column 1, line 53, change "of" to "or."
49. On page 35276, column 1, line 27, change "given" to "give."
50. On page 35277, column 2, § 1910.20(a), line 38, change the semicolon to a comma.
51. On page 35278, column 3, § 1910.20(d)(1)(ii)(A), line 38, change "mathmematical" to "mathematical."
52. On page 35280, column 3, Appendix B to § 1910.20, line 57, change "124.247" to "124,247."
53. On page 35281, column 2, § 1910.1001(j)(6)(ii), line 56, delete the word "the."
54. On page 35282, column 3, a line consisting of five asterisks should be inserted between line 49, "1910.20(h)," and line 50, "18. Section 1910.1018 is amended by."
55. On page 35282, column 3, line 51, change "paragraphs" to "paragraph."
56. On page 35283, column 1, § 1910.1018(q)(4)(iv), line 3, insert the word "forth" between "set" and "in."
57. On page 35283, column 1, line 16, change "paragraphs" to "paragraph."
58. On page 35283, column 1, § 1910.1025 (n)(4)(ii), line 29, change "(2)-(i)" to "(g)-(i)."
59. On page 35283, column 1, line 40, change "paragraphs" to "paragraph."
60. On page 35283, column 2, line 7, change "paragraphs" to "paragraph."
61. On page 35283, column 2, line 28, change "amened" to "amended."
62. On page 35283, column 2, line 29, change "paragraphs" to "paragraph."
63. On page 35283, column 2, line 29, insert a comma following "(k)(3)(ii)."
64. On page 35283, column 2, line 51, change "paragraphs" to "paragraph."
65. On page 35283, column 2, line 51, insert a comma following "(p)(3)(ii)."
66. On page 35283, column 3, line 7, change "paragraphs" to "paragraph."
67. On page 35283, column 3, line 8, insert a comma after "VI, D."
68. On page 35283, column 3, § 1910.1045 (q)(4)(ii), line 20, change "(q)-(i)" to "(g)-(i)."
69. On page 35283, column 3, line 60, change "paragraphs" to "paragraph."
70. On page 35283, column 3, line 60, insert a comma after "(q)(3)(ii)."
71. On page 35283, column 3, line 64, change "§ 1910.151" to "§ 1990.151."

II. Federal Register Document 80-15390 appearing at 45 FR 35284 is corrected as follows:

1. On page 35285, column 3, line 3, change "invonvenience" to "inconvenience."
2. On page 35286, column 1, line 32, change "orginally" to "originally."
3. On page 35286, column 2, line 15, change "Birdbord" to "Bridbord."

4. On page 35286, column 2, line 16, change "eplicitly" to "explicitly."
5. On page 35289, column 1, line 59, change "particularly" to "particularity."
6. On page 35293, column 1, line 47, change "personnally" to "personally."
7. On page 35293, column 2, line 2, change "prefessional" to "professional."
8. On page 35293, column 2, line 66, change "construes" to "construe."
9. On page 35293, column 2, line 67, change "treats" to "treat."
10. On page 35295, column 1, § 1913.10(b)(7), line 29, change "enployees" to "employees."
11. On page 35297, column 1, § 1913.10(l)(1), line 35, change the period to a comma.

(Sec. 6(b), 8(c) and 8(g), 84 Stat. 1593, 1599 (29 U.S.C. 655, 657); the Secretary of Labor's Order 8-76 (41 FR 25059) and 29 CFR Part 1911)

Signed at Washington, DC, this 8th day of August, 1980.

Eula Bingham,

Assistant Secretary of Labor.

[FR Doc. 80-24590 Filed 8-14-80; 8:45 am]

BILLING CODE 4510-26-M

29 CFR Part 1952

Approval of Supplement To Puerto Rico State Plan

AGENCY: Occupational Safety and Health Administration, Department of Labor.

ACTION: Final rule.

SUMMARY: This notice approves the supplement revising the approved Puerto Rico development schedule in 1952.383 which revises the dates in the developmental schedule for steps (a)-(m) and adds scheduling for on-site consultation regulations, the laboratory, poster, the boiler and elevator program, and staffing for consultation, laboratory, boilers, and elevators.

EFFECTIVE DATE: August 12, 1980.

FOR FURTHER INFORMATION CONTACT: John Smith, Project Officer, U.S. Department of Labor, Occupational Safety and Health Administration, 200 Constitution Avenue, NW., Room N-3613, Washington, D.C. 20210, (202) 523-8081.

SUPPLEMENTARY INFORMATION:

Background

Part 1953 of Tile 29, Code of Federal Regulations, prescribes procedures under Section 18 of the Occupational Safety and Health Act of 1970 (hereinafter referred to as the Act) for review of changes and progress in the development and implementation of State plans which have been approved in accordance with Section 18(c) of the Act and 29 CFR Part 1902. On August 30, 1977, notice was published in the Federal Register (42 FR 43628), of the approval of the Puerto Rico plan and adoption of Subpart FF of Part 1952 containing the approval decision and description of the plan, including the development schedule in § 1952.383.

Description of Supplement: This supplement revises the dates in the developmental schedule in § 1952.383 for steps (a)-(m) and adds scheduling for on-site consultation regulations, the laboratory, posters, the boiler and elevator program, and staffing for consultation, laboratory, boilers, and elevators.

A copy of this supplement, along with the approved plan, may be inspected and copied during business hours at the following locations:

Office of State Programs, Occupational Safety and Health Administration, 200 Constitution Ave., NW., Room N-3613, Washington, D.C. 20210.

Office of Regional Administrator, Occupational Safety and Health Administration, 1515 Broadway (1 Astor Plaza), Room 3445, New York, New York 10036.

Department of Labor, Occupational Safety and Health Administration, Prudencio Rivera Martinez Building, 505 Munoz Rivera Avenue, Hato Rey, Puerto Rico 00918.

Public Participation: Under § 1953.2(c) of this chapter, the Assistant Secretary of Labor for Occupational Safety and Health (hereinafter called the Assistant Secretary) may prescribe alternative procedures to expedite the review process or for other good cause which may be consistent with applicable law. The Assistant Secretary finds that the Commonwealth's supplement described above is consistent with commitments made in the approved plan which were previously made available for public comment. Accordingly, it is found that further public comment is unnecessary.

Decision

After careful consideration, the Puerto Rico plan supplement described above is hereby approved under Subpart B of Part 1953. This decision incorporates the requirements of the Act and implementing regulations applicable to State plans generally.

In addition, Subpart FF of 29 CFR Part 1952 is hereby amended to reflect these approved revisions and additions to § 1952.383. As amended § 1952.383 reads as follows:

§ 1952.383 Developmental schedule.

(a) Position descriptions of State plan personnel by March, 1978.
(b) Public information program (private sector), one year after plan approval.
(c) Analysis for inspection scheduling (private sector), March 1980.
(d) Submit administrative regulations, September, 1978.
(e) Affirmative action plan by July, 1980.
(f) File and promulgate standards, March, 1978.
(g) Adopt the Field Operations Manual, April, 1980.
(h) Adopt management information system, January, 1980.
(i) Internal training schedule, April, 1980.
(j) Employer, employee training schedule, August, 1978.
(k) Public information program (government sector), February, 1980.
(l) Analysis for inspection scheduling (government sector), June, 1980.
(m) Implementation of public employee program, October, 1978.
(n) On-site consultation regulations, March, 1979.
(o) Laboratory, August, 1980.
(p) Posters, February, 1978.
(q) Boiler and Elevator Program, June, 1980.
(r) Staffing on Board for consultation, laboratory, boiler and elevators, February, 1980.

Signed at Washington, D.C. this 5th day of August 1980.

Eula Bingham,

Assistant Secretary of Labor.

[FR Doc. 80-24819 Filed 8-14-80; 8:45 am]

BILLING CODE 4510-26-M

DEPARTMENT OF THE INTERIOR

Heritage Conservation and Recreation Service

36 CFR Part 1228

Urban Park and Recreation Recovery Act of 1978; Local Recovery Action Program

AGENCY: Heritage Conservation and Recreation Service, U.S. Department of the Interior.

ACTION: Final rule.

SUMMARY: This document is an amendment to the final rule and is published to extend the deadline for the use of Preliminary Action Programs under the Urban Park and Recreation Recovery Program (Title X of the National Parks and Recreation Act of 1978, Pub. L. 95-625). The final rule was

originally printed in the March 10, 1980, Federal Register (45 FR 15456). The amendment is necessary due to the fact that on March 1, 1980, the Administration recommended no more funding for the program. Most communities then stopped work for a period of three months on their recovery action programs. This extension, therefore, will allow communities to make up for the lost time.

EFFECTIVE DATE: August 15, 1980.

FOR FURTHER INFORMATION CONTACT: Mr. Chris Soller, Division of Urban Programs, Heritage Conservation and Recreation Service, 440 G Street, NW., Room 310, Box P, Washington, D.C. 20243, (202) 343-5971.

SUPPLEMENTARY INFORMATION: The proposed rescission of funds from the Urban Park and Recreation Recovery Program's FY 1980 budget and uncertainty about funding in FY 1981 caused a great amount of confusion on the part of communities participating in the Urban Park and Recreation Recovery Program (UPARR). The proposed rescission had the affect of stopping implementation of the UPARR Program for a period of three months, since the grant issuing process was suspended during the period of time the rescission was under consideration. During this period of time, there was uncertainty as to whether the program would survive. Congress' decision of July 8, 1980 (Pub. L. 96-304), which resolved the rescission question, allowed for continuation of the program.

Because of the uncertainty of the future of the UPARR Program during the time a rescission was being considered, and due to the limited time and budgets of many participating communities, work was frequently postponed on Recovery Action Programs, the planning program required of any jurisdiction for participation in the program.

Under current regulations, until October 1, 1980, the planning requirement could be satisfied with an approved Preliminary Action Program. After October 1, 1980, no rehabilitation or innovation grant was to have been awarded without an approved Recovery Action Program on file with HCRS. This regulation extends the October 1, 1980 deadline three months, the period of interruption in the program caused by the rescission consideration.

It has been determined that because it should notify applicant jurisdictions immediately that they have this three month extension, it is impracticable and contrary to the public interest to publish this revision as a notice of proposed rulemaking, or to delay the effective date for this provision beyond the date of publication. Therefore, in accordance with the exception provided for in the Administrative Procedure Act in 5 U.S.C. 553(b)(B) and d(e), this amendment is published as a final rule effective immediately.

(Catalog of Federal Domestic Assistance 15.417)

Statement of Applicability

This amendment does not affect the existing A-95 review procedures for the Urban Park and Recreation Recovery Program as outlined in OMB Circular No. A-95: Administrative Note No. 10.

Statement of Significance

The Department of the Interior has determined that this document is not a significant rule and does not require a regulatory analysis under Executive Order 12044 and 43 CFR Part 14.

Authorship Statement

The author of this document is Mr. Chris Soller of the Heritage Conservation and Recreation Service, (202) 343-5971.

Dated: August 11, 1980.

Meg Maguire,

Deputy Director, Heritage Conservation and Recreation Service.

In consideration of the foregoing, 36 CFR Part 1228 is amended as follows:

PART 1228—URBAN PARK AND RECREATION RECOVERY ACT OF 1978

1. Section 1228.10 is amended to read as follows:

§ 1228.10 General requirements.

Any eligible jurisdiction or discretionary applicant desiring to apply for a grant must develop, submit and have approved a local Action Program. The Action Program must be submitted to the appropriate Heritage Conservation and Recreation Service Regional Office where it will be evaluated and approved. This is a necessary requirement which must precede the awarding of any rehabilitation or innovation grant. Until January 1, 1981, this requirement may be satisfied with an approved Preliminary Action Program. The Preliminary Action Program must include a firm commitment by the local government to complete and adopt a full Action Program within one year of approval of the Preliminary Action Program. After January 1, 1981, no rehabilitation or innovation grant will be awarded without an approved Recovery Action Program on file with the appropriate Regional Office. Communities are required to submit four (4) copies of the Action Program. Regional Offices and their States are:

Northeast Region

Federal Office Bldg. Room 9310, 600 Arch Street, Philadelphia, Pennsylvania 19106.
Connecticut, Delaware, Maine, Maryland, Massachusetts, New Hampshire, New Jersey, New York, Pennsylvania, Rhode Island, Vermont, Virginia, West Virginia, and the District of Columbia.

Southeast Region

75 Spring Street, Atlanta, Georgia 30303.
Alabama, Florida, Georgia, Kentucky, Mississippi, North Carolina, Puerto Rico, South Carolina, Tennessee, and the Virgin Islands.

Lake Central Region

Federal Building, Ann Arbor, Michigan 48107.
Illinois, Indiana, Michigan, Minnesota, Ohio, and Wisconsin.

Mid-Continent Region

Denver Federal Center, P.O. Box 25387, Denver, Colorado 80225.
Colorado, Iowa, Kansas, Missouri, Montana, Nebraska, North Dakota, South Dakota, Utah, and Wyoming.

Pacific Southwest Region

450 Golden Gate Avenue, San Francisco, California 94102.
American Samoa, Arizona, California, Guam, Hawaii, and Nevada.

Northwest Region

Federal Building, 914 Second Avenue, Seattle, Washington 98174.
Idaho, Oregon and Washington.

South Central Region

5000 Marble Avenue, N.E., Albuquerque, New Mexico 87110.
Arkansas, Louisiana, New Mexico, Oklahoma, and Texas.

Alaska Area Office

1011 East Tudor, Suite 297, Anchorage, Alaska 99503.

2. Section 1228.15 is amended to read as follows:

§ 1228.15 Preliminary action program.

During an initial interim period, the Action Program requirements, as described in §§ 1228.11, 1228.12 and 1228.13 may be satisfied by local governments' submission of a Preliminary Action Program. The initial interim period shall end on January 1, 1981. Communities are required to submit four (4) copies of the Preliminary Action Program.

(Sec. 1007(a) and (b) of Title 10 National Parks and Recreation Act of 1978, Pub. L. 95-625, 16 U.S.C. 2506)

[FR Doc. 80-24849 Filed 8-14-80; 8:45 am]

BILLING CODE 4310-10-M

ENVIRONMENTAL PROTECTION AGENCY

40 CFR Part 52

[FRL 1568-1]

Approval of Conditionally Approved Elements in the Arkansas Plan for Nonattainment Areas

AGENCY: Environmental Protection Agency (EPA).

ACTION: Final rulemaking.

SUMMARY: The purpose of this notice is to approve elements of the State Implementation Plan (SIP) revisions for Arkansas, which were conditionally approved on January 29, 1980, (45 FR 6569). These revisions were submitted by the Governor on December 10, 1979 to fulfill the requirements of Part D of Title I of the Clean Air Act, as amended in 1977, with regard to nonattainment areas.

When originally submitted, certain portions of the SIP contained minor deficiencies which the State agreed to correct by a specified deadline. The deadline committed to was December 15, 1979. The EPA received the required documentation according to schedule and has evaluated the State's submittal. A notice of receipt was published on April 7, 1980 announcing receipt of the material and that the conditional approval was to be continued pending EPA's final action on the submission.

EFFECTIVE DATE: August 15, 1980.

FOR FURTHER INFORMATION CONTACT: Jerry Stubberfield, Chief Implementation Branch, U.S. EPA Region VI, (214) 767-1518.

SUPPLEMENTARY INFORMATION:

Introduction

On July 31, 1979 (at 44 FR 44904), EPA published a notice of proposed rulemaking on revisions to the Arkansas SIP. Under that notice the Agency discussed the SIP in detail and described the deficiencies of the SIP pursuant to Part D of the Act and the General Preamble, which was published in the April 4, 1979 issue of the Federal Register (at 44 FR 20372) and supplemented on July 2, 1979 (44 FR 38583), August 28, 1979 (44 FR 50371), September 17, 1979 (44 FR 5376), and November 23, 1979 (44 FR 67182).

In response to the proposed rulemaking notice dated July 31, 1979, (44 FR 44904), the State committed to correct the deficiencies and submit their corrections by December 15, 1979.

EPA took final action to conditionally approve certain elements of the Arkansas plan January 29, 1980 (45 FR 6569).

A discussion of conditional approval and its practical effect appears in supplements to the General Preamble, 44 FR 38583 (July 2, 1979) and 44 FR 67182 (November 23, 1979).

The conditional approvals required the State to submit a final compliance date which would demonstrate attainment as expeditiously as practicable for all applicable stationary sources of volatile organic compounds (VOC) and a definition of lowest achievable emission rate (LAER) consistent with the definition of LAER contained in Section 171(3) of the Act. These submittals were required to be submitted by December 15, 1979 in order to satisfy the conditional approval.

The State submitted a final compliance date of June 1, 1981 for VOC sources covered by State regulation, and a modified definition of LAER consistent with the definition contained in section 171(3) of the Act. These items were received on December 10, 1979. The EPA published a notice of receipt in the Federal Register, on April 7, 1980 45 FR 2373.

The EPA has evaluated the State's submittal and has determined the conditions are fully met. Therefore, EPA is withdrawing conditional approval, and is fully approving this portion of the SIP.

PUBLIC COMMENTS: The public was given the opportunity to comment on the substance and schedules of the conditioned items in the proposed rulemaking of July 31, 1979 (44 FR 44904). There were no comments specific to the Arkansas SIP.

EPA finds that good cause exists for making this rule immediately effective. In the notice of final rulemaking concerning the Arkansas SIP (45 FR 6569, January 29, 1980), EPA imposed certain conditions which the State had to meet before full approval could be promulgated. The State has now met those conditions.

Under Executive Order 12044, EPA is required to judge whether a regulation is "significant" and therefore subject to the procedural requirements of the Order or whether it may follow other specialized development procedures. EPA labels these other regulations "specialized". I have reviewed this regulation and determined that it is a specialized regulation not subject to the procedural requirements of Executive Order 12044.

This Notice of final rulemaking is issued under the authority of Section 110 of the Clean Air Act, as amended.

Dated: August 6, 1980.

Douglas M. Costle,

Administrator.

1. Section 52.170(c) (7) and (8) is added as follows:

§ 52.170 Identification of Plan.

* * * * *

(c) * * *

(7) Revisions to Arkansas Regulation 4.5(a) for the "Control of Volatile Organic Compounds" showing a final compliance date of June 1, 1981, was submitted by the Arkansas Governor on December 10, 1979.

(8) A modification to the definition for lowest achievable emission rate (LAER), consistent with the definition contained in Section 171(3) of the Act, was submitted by the Arkansas Governor on December 10, 1979.

§ 52.174 [Reserved]

2. Section 52.174 Compliance Schedules is hereby revoked and reserved.

§ 52.177 [Reserved]

3. Section 52.177 Review of New Sources and modifications is hereby revoked and reserved.

[FR Doc. 80-24691 Filed 8-14-80; 8:45 am]

BILLING CODE 6560-01-M

---

40 CFR Part 52

[FRL 1571-3]

Approval and Promulgation of Implementation Plans—N.H.; Receipt of Implementation Plan Revisions: Regulating the Operation of Major New and Modified Sources of Air Pollution

AGENCY: Enviromental Protection Agency (EPA).

ACTION: Notice of receipt of submittal to satisfy condition of plan approval.

SUMMARY: This notice is to announce the receipt of State Implementation Plan (SIP) revisions for New Hampshire. The revisions were submitted on July 8, 1980 to satisfy a condition of EPA's approval of New Hampshire's Attainment Plan SIP revisions, which were required under Part D of Clean Air Act. New Hampshire's submittal amends Regulation No. 16, *Requirement for statewide permit system regulating the operation of new and existing sources of air pollution.*

DATES: See Supplementary Information.

ADDRESSES: Copies of the New Hampshire submittal are available for public inspection during normal business hours at the Environmental Protection Agency, Region I, Room 1903, JFK Federal Building, Boston,

Massachusetts 02203; Public Information Reference Unit, Environmental Protection Agency, 401 M Street, S.W., Washington, D.C. 20460; and the Air Resources Agency, Health and Welfare Bldg., Hazen Drive, Concord, New Hampshire 03301.

FOR FURTHER INFORMATION CONTACT: Arnie Leriche, Air Branch, EPA Region I, Room 1903, JFK Building, Boston, Massachusetts 02203, (617) 223-4448.

SUPPLEMENTARY INFORMATION: EPA published a Final Rulemaking Notice in the Federal Register on April 11, 1980 (45 CFR 24869), conditionally approving New Hampshire's Attainment Plan SIP revisions submitted on May 29 and November 6, 1979.

The revision was submitted to comply with the requirements of Part D of the Clean Air Act by implementing new measures for controlling air pollution which are designed to achieve attainment of the primary and secondary National Ambient Air Quality Standards by December 31, 1982. However, EPA's conditional approval was based on a commitment by the state to meet several conditions, one of which specified that by July 1, 1980 the state must amend its regulations to assure that proposed new sources must be in compliance with federal as well as state regulations and standards and that legally binding offsets are secured by the time the proposed source is to commence operation.

New Hampshire has submitted SIP revisions amending its regulations. EPA is presently reviewing the state's submittal to determine compliance with Clean Air Act requirements, and intends to publish a rulemaking notice in the Federal Register by September 1, 1980.

Date: August 7, 1980.

William R. Adams, Jr.,

Regional Administrator, Region I.

[FR Doc. 80-24806 Filed 8-14-80; 8:45 am]

BILLING CODE 6560-01-M

---

40 CFR Part 169

[FRL 1536-5]

Amendment to Regulations for Books and Records of Pesticide Production and Distribution

AGENCY: Office of Enforcement, Environmental Protection Agency (EPA or the Agency).

ACTION: Final rule.

SUMMARY: This document contains final regulations which impose certain recordkeeping requirements upon producers of pesticides, and devices, as authorized by Section 8(a) of the Federal Insecticide, Fungicide, and Rodenticide Act, as amended (FIFRA or the Act). This rule adds new recordkeeping requirements to those currently required to be kept by producers who manufacture pesticides and devices for export. It also extends the recordkeeping requirements to producers who manufacture active ingredients used in producing pesticides.

EFFECTIVE DATE: October 14, 1980.

FOR FURTHER INFORMATION CONTACT: John J. Neylan III, Office of Enforcement, Pesticides and Toxic Substances Enforcement Division (EN-342), EPA, 401 M Street, S.W., Washington, D.C. 20460, (202) 755-1212.

SUPPLEMENTARY INFORMATION:

Background:

The Federal Pesticide Act of 1978, Pub. L. 95-396, 92 Stat. 819, September 30, 1978, substantially amended the FIFRA. The terms "Producer" and "Produce" as found in Section 2(w) were expanded to include the manufacturer of, and the manufacturing of active ingredients used in producing pesticides. This amendment extends the recordkeeping requirements to producers of pesticide active ingredients. Section 17(a) of the FIFRA was modified so that pesticides, devices, and active ingredients used in producing pesticides, which are destined for export must now bear certain minimal labeling. The producers of such products are now subject to both FIFRA Sections 7 (establishment registration) and 8 (books and records). In addition, unless a pesticide is registered under Section 3 or sold under Section 6(a)(1), it cannot be exported without being in violation of the Act unless, prior to export, the foreign purchaser has signed a statement acknowledging that the purchaser understands that the pesticide is not registered and therefore cannot be sold in the United States. This amendment also sets forth new recordkeeping requirements for exporters of pesticides, devices, and pesticide active ingredients.

Comments on the proposed rules, published for comment on April 24, 1980 (45 FR 27780), were received from 10 sources. These comments are available for public inspection at the Office of Enforcement, Pesticides and Toxic Substances Enforcement Division, EPA, Rm. 3624, 401 M Street, S.W., Washington, D.C. 20460.

After consideration of all comments received, EPA has made several, relatively minor, changes to Part 169. Both the relevant comments and the changes to the rule are discussed below.

Comments

General.—One commenter stated that EPA's roster of pesticide active ingredients is inflated by the presence of substances with no genuine pesticidal activity, such as magnesium sulfate, sodium carbonate and silicon dioxide.

This commenter may be addressing the publication entitled *Acceptable Common Names and Chemical Names for the Ingredient Statement on Pesticide Labels.* This publication lists the correct names of chemicals which *might* be used as active ingredients. Therefore, it would be inappropriate to remove any of these names, even though in some cases most of their uses are non-pesticidal. In any event, because a chemical is listed in that publication does not imply that the producer is automatically required to keep books and records in accordance with these rules. As mentioned in the Preamble to the proposed rule for books and records, producers subject to this rule will be identified through an amendment to FIFRA Section 7's Establishment Registration regulations (40 CFR Part 167).

Maintenance of Records.—One commenter suggested that requiring the name of the delivering carrier for pesticides received and the name of the originating carrier for pesticides shipped was duplicative since the information could be gotten from the shipper's records.

The Agency does not agree. One purpose of this record keeping is to provide a means for tracing violative shipments such as when the Agency is requesting a product recall. Names of both incoming and outgoing carriers may then be important. Besides, most company shipment and receipt records would now have information on who the carrier was. The requirement should, therefore, not be burdensome.

Two comments were received concerning the need to keep a record of statements from foreign purchasers of unregistered pesticides in which the purchaser acknowledges the registration status of the pesticides. One commenter felt the process was time consuming and harmful to the country's competitive position. This commenter also felt it was duplicative of the reporting requirements of FIFRA Section 7. The other commenter did not disagree with the record keeping requirement, just the need to secure the record before exporting the product.

The Agency believes these comments are more appropriately addressed to the Export Policy Statement which was proposed on July 18, 1979. The requirement that a foreign purchaser

sign a statement in which the unregistered status of the exported pesticide is acknowledged is a statutory requirement of FIFRA Section 17(a)(2). In order to be certain that foreign purchasers (and exporters) adhere to this requirement, EPA requires that the acknowledgement statement be obtained before the shipment. This is in no way duplicative of the pesticide production reporting requirement under FIFRA Section 7, since that requirement asks for total production reporting for all domestic and exported pesticides.

Two commenters felt the requirements for records on disposal of pesticides were duplicative of the recently published hazardous waste management rules promulgated under the Resource Conservation and Recovery Act (RCRA) (45 F.R. 33063, May 19, 1980).

The Agency agrees with these comments to some extent. At the present time, not all pesticides and pesticide active ingredients are covered by these RCRA rules. Nevertheless, this rule has been changed so that pesticides regulated under RCRA will not regulated by this rule also. However, until disposal of a pesticide or pesticide active ingredient is covered by RCRA, records of its disposal will have to be maintained in accordance with § 169.2(i).

One commenter felt that the Agency too broadly interpreted the statute when it required a record be kept of "*any* factual information *coming to the attention of* the producer regarding unreasonable adverse effects * * * by any pesticide or pesticide active ingredients * * * " (Emphasis added). Further, the commenter felt it placed the registrant/producer in the position of being twice liable for the same omission: First, failure to make the proper submission of known unreasonable adverse effects to EPA, and second, failure to keep a record of the item.

The Agency has deleted this record keeping requirement since there is already a reporting requirement for information of this nature [See 43 FR 37611, August 23, 1978 and 44 FR 40716, July 12, 1979].

Inspection.—One commenter objected to the scope of EPA's inspection authority, as detailed in § 169.3, in that it went beyond the authority of FIFRA Section 8(b).

The Agency does not agree. This same comment was raised in response to the 1974 regulations and was answered in the response to comments in the Preamble to those regulations (39 FR 33499, September 18, 1974). Briefly, it is the Agency's belief that Congress would not have authorized the Agency, under Section 8(a), to require producers to keep records "necessary for the effective enforcement of this Act," if these records were not reviewable. Therefore, it is the Agency's position that any records required under Section 8(a) may be inspected.

One commenter suggested that the availability for inspection and copying of the information required by § 169.2(d)(2) be limited to proceedings described in Section 10 of FIFRA. This commenter was concerned with the confidentiality of their customer lists.

The Agency may require information on consignees of pesticides, devices, or pesticide active ingredients for purposes other than contemplated by FIFRA Section 10, for example, where monitoring a product recall. Therefore, this comment is rejected.

Conclusion.—As the preceding discussion shows, relatively few changes in the proposed regulations were necessary and those changes were minor. Therefore, this regulation does not require reproposal under 5 U.S.C. 553(b).

Effective Date: This regulation is effective October 14, 1980.

Regulatory Analysis: EPA has determined that this amended rule does not require a Regulatory Analysis under Executive Order 12044.

Statutory Review: In accordance with Section 25 of FIFRA, this final rule was submitted to the U.S. Department of Agriculture (USDA) and the FIFRA Scientific Advisory Panel (SAP) for review. No comments were received from USDA. The SAP determined that these rules were administrative/procedural in nature; therefore, they waived scientific review.

Regulatory Review: Section 2(d)(8) of Executive Order 12044 requires that a plan for evaluating the regulation after its issuance be developed. The Agency's plan for evaluation of this rule calls for a public comment period on the effects of the regulation five years from the date of promulgation of this rule. A determination will be made at that time, based on an evaluation of the comments as to whether modification of the rule is necessary.

(Sections 8(a) and 25(a)(1) of the Federal Insecticide, Fungicide, and Rodenticide Act, as amended (7 U.S.C. 136f, 136w)).

Dated: August 7, 1980.

Douglas M. Costle,

Administrator.

PART 169—BOOKS AND RECORDS AND PESTICIDE PRODUCTION AND DISTRIBUTION

It is proposed to amend 40 CFR Part 169 to read as follows:

Sec.
169.1 Definitions.
169.2 Maintenance of records.
169.3 Inspection.

Authority: Secs. 8 and 25, Federal Insecticide, Fungicide, and Rodenticide Act, as amended by the Federal Pesticide Act of 1978 (92 Stat. 829, 89 Stat. 751).

§ 169.1 Definitions.

Terms used in this part shall have the meanings set forth for such terms in the Federal Insecticide, Fungicide, and Rodenticide Act, as amended. In addition, as used in this part, the following terms shall have the meanings set forth below:

(a) *Amount of pesticide or active ingredient.* The term "amount of pesticide or active ingredient" means the weight or volume of the pesticide or active ingredient used in producing a pesticide expressed as weight for solid or semi-solid products and as weight or volume of liquid products.

(b) *Batch.* The term "batch" means a quantity of a pesticide product or active ingredient used in producing a pesticide made in one operation or lot or if made in a continuous or semi-continuous process or cycle, the quantity produced during an interval of time to be specified by the producer.

(c) *Device.* The term "device" means any device or class of device as defined by the Act and determined by the Administrator to be subject to the provisions of the Act.

(d) *Inability.* The term "inability" means the incapacity of any person to maintain, furnish or permit access to any records under this Act and regulations, where such incapacity arises out of causes beyond the control and without the fault or negligence of such person. Such causes may include, but are not restricted to acts of God or of the public enemy, fires, floods, epidemics, quarantine restrictions, strikes, and unusually severe weather, but in every case, the failure must be beyond the control and without the fault or negligence of said person.

(e) *Producer.* The term "producer" means the person, as defined by the Act, who produces or imports any pesticide or device or active ingredient used in producing a pesticide.

§ 169.2 Maintenance of records.

All producers of pesticides, devices, or active ingredients used in producing pesticides subject to this Act, including pesticides produced pursuant to an experimental use permit and pesticides, devices, and pesticide active ingredients produced for export, shall maintain the following records:

(a) Records showing the product name, EPA Registration Number,

Experimental Permit Number if the pesticide is produced under an Experimental Use Permit, amounts per batch and batch identification (numbers, letters, etc.) of all pesticides produced. In cases where the product is an active ingredient used in producing a pesticide or where the product is a pesticide which is not registered, is not the subject of an application for registration, or is not produced under an Experimental Use Permit, the records shall also show the complete formula. The batch identification shall appear on all production control records. These records shall be retained for a period of two (2) years.

(b) Records showing the brand names and quantities of devices produced. These records shall be retained for a period of two (2) years.

(c) Records showing the following information regarding the receipt, by the producer, of all pesticides, devices, and active ingredients used in producing pesticides:

(1) Brand name of the pesticide or device, or common or chemical name of the pesticide active ingredient;

(2) Name and address of shipper;

(3) Name of delivering carrier;

(4) Date received; and

(5) Quantities received.

These records are not intended to cover receipt of pesticides used for in-plant maintenance, extermination, or sanitation programs, etc. Shipping and receiving documents such as invoices, freight bills, receiving tickets, etc., which provide the required information will be considered satisfactory for the purposes of this section. These records shall be retained for a period of two (2) years.

(d) Records showing the following information regarding the shipment of all pesticides, devices, and active ingredients used in producing pesticides:

(1) Brand name of pesticide or device, or the common or chemical name of the pesticide active ingredient;

(2) Name and address of consignee;

(3) Where the pesticide is produced pursuant to an experimental use permit (FIFRA section 5), a special exemption (section 18), or a special local need (section 24), the information required under these sections and any regulations promulgated thereto regarding the distribution of such pesticides;

(4) Name of originating carrier;

(5) Date shipped or delivered for shipment; and

(6) Quantities shipped or delivered for shipment.

Such records are required regardless of whether any shipment or receipt of shipment is between plants owned or otherwise controlled by the same person. Shipping and receiving documents such as invoices, freight bills, receiving tickets, etc., which provide the required information will be considered satisfactory for purposes of this section. These records shall be retained for a period of two (2) years.

(e) Inventory records with respect to the types and amounts of pesticides or pesticide active ingredients, or quantities of devices in stock which he has produced. These records may be disposed of when a more current inventory record is prepared.

(f) Copies of all domestic advertising of the restricted uses of any pesticide registered for restricted use which the producer caused to have prepared, including any radio or television scripts for all such pesticides. These records shall be retained for a period of two (2) years.

(g) Copies of all guarantees given pursuant to section 12(a)(2)(C) of the Act. These records shall be retained for a period of one (1) year after expiration of the guarantee.

(h) In the case of all pesticides, devices, and active ingredients used in producing pesticides intended solely for export to any foreign country:

(1) Copies of the specification or directions of the foreign purchaser for the production of such pesticides, devices, or pesticide active ingredients;

(2) Copies of labels or labeling required to comply with section 17(a)(1) of the Act; and

(3) For any pesticide other than a pesticide registered under section 3 or sold under section 6(a)(1) of the Act, copies of a statement signed by the foreign purchaser of the pesticide acknowledging that the purchaser understands that such pesticide is not registered for use in the United States and cannot be sold for use in the United States under this Act. These foreign purchaser acknowledgement statements must be obtained for the first shipment of a particular product to a particular purchaser for each importing country, once annually.

These records shall be retained for a period of two (2) years after expiration of the contract.

(i) Records on the method of disposal (burial, incineration, etc.) date or dates of disposal, location of the disposal sites, and the types and amounts of pesticides or pesticide active ingredients disposed of by the producer or his contractor. With regard to the disposal of containers accumulated during production, the Agency will consider satisfactory a statement, attested to by a responsible firm official, describing in general terms the method and location of disposal, e.g., all containers are taken periodically to a certain site. Records of deviations from normal practice must be maintained. In addition, any records on the disposal of pesticides or pesticide active ingredients and/or containers specified pursuant to section 19 of the Act and any regulations promulgated thereto shall also be maintained. The above requirements apply to those products bearing label instructions for disposal and to any other products specified under any regulations promulgated pursuant to section 19. These records shall be retained for twenty (20) years or may be forwarded after three (3) years to the Environmental Protection Agency Regional Administrator for maintenance. Notwithstanding these record keeping requirements, whenever any producer of pesticides or pesticide active ingredients is complying with a rule promulgated under the authority of the Resource Conservation and Recovery Act of 1976 (RCRA) (Pub. L. 94-580, 90 Stat. 2795, October 21, 1976), for the handling or disposal of hazardous wastes, as defined by RCRA or any regulations promulgated thereunder, such producer will no longer be required to maintain records in accordance with this subsection.

(j) Records of any tests conducted on human beings whether performed by the producer himself or authorized and/or paid for by the producer. Such records shall include: The names and addresses of subjects tested, dates of tests, types of tests, written consent of subjects to test, and all information and instructions given to the subjects regarding the nature and purpose of the tests and of any physical and mental health consequences which were reasonably foreseen therefrom, and any adverse effects of the test on the subjects, including any such effects coming to the attention of the producer after completion of the tests. These records shall be retained for twenty (20) years or may be forwarded after three (3) years to the Environmental Protection Agency Regional Administrator for maintenance.

(k) Records containing research data relating to registered pesticides including all test reports submitted to the Agency in support of registration or in support of a tolerance petition, *all* underlying raw data, and interpretations and evaluations thereof, whether in the possession of the producer or in the possession of the independent testing facility or laboratory (if any) which performed such tests on behalf of the producer. These records shall be

retained as long as the registration is valid and the producer is in business.

§ 169.3 Inspection.

(a) *Producers.* Any producer of any pesticide, device, or active ingredient used in producing a pesticide which is subject to this Act shall, upon request of any officer or employee of the Agency or of any State or political subdivision, duly designated by the Administrator, furnish or permit such person at all reasonable times to have access to and to copy all records required to be maintained by this part, including records in the possession of an independent testing facility or laboratory which performed tests on behalf of the producer. Such inspection will be conducted in accordance with procedures detailed in section 8(b) of the Act.

(b) Distributors, carriers, dealers, etc. Any distributor, carrier, dealer, or any other person who sells or offers for sale, delivers or offers for delivery any pesticide, device, or active ingredient used in producing a pesticide which is subject to this Act, shall, upon request of any officer or employee of the Agency or of any State or political subdivision, duly designated by the Administrator, furnish or permit such person at all reasonable times to have access to and copy all records showing the delivery or holding of such pesticide, device, or active ingredient used in producing a pesticide, including the quantity, the date of shipment and receipt, and the name and address of the consignor and consignee, and any guarantee received pursuant to section 12(b)(1) of the Act.

(c) *Confidentiality.* Any record which is subject to the regulations under this part, and which may be confidential, shall be treated in accordance with the provisions of section 10 of the Act. The availability to the public of information provided to, or otherwise obtained by, the Administrator under this Part shall be governed by Part 2 of this chapter.

(d) *Inability.* (1) In the event of the inability of any person to produce records containing the information required to be maintained, furnished for inspection, or given access to, all other records and information regarding the same shall be provided.

(2) Where no such inability exists and any such person fails to give access to and permit copying of such records as required, such failure shall be deemed a refusal to keep records required or a refusal to allow the inspection of any such records or both.

[FR Doc. 80-24764 Filed 8-14-80; 8:45 am]
BILLING CODE 6560-01-M

40 CFR Part 180

[FRL 1575-4; PP 7F1907/R267]

Oxamyl; Tolerances and Exemptions From Tolerances for Pesticide Chemicals in or on Raw Agricultural Commodities

AGENCY: Environmental Protection Agency (EPA).

ACTION: Final rule.

SUMMARY: This rule establishes a tolerance for residues of the insecticide oxamyl (methyl *N',N'*-dimethyl-*N*-[methylcarbamoyl)oxy]-1-thiooxamimidate) in or on cottonseed at 0.2 part per million (ppm). This regulation was requested by E. I. du Pont de Nemours. This regulation will permit the maximum permissible level for residues of oxamyl on cottonseed.

EFFECTIVE DATE: Effective on August 15, 1980.

ADDRESS: Jay S. Ellenberger, Product Manager (PM) 12, Registration Division (TS-767), Office of Pesticide Programs, Environmental Protection Agency, 401 M St., SW., Washington, DC 20460.

FOR FURTHER INFORMATION CONTACT: Jay S. Ellenberger, (202-426-2635).

SUPPLEMENTARY INFORMATION: EPA issued a notice published in the Federal Register on March 21, 1977 (42 FR 15361) that E. I. du Pont de Nemours and Company, Wilmington, DE 19898 had filed a pesticide petition (PP 7F1907). The petition proposed that 40 CFR 180.303 be amended to establish a tolerance for residues of the insecticide oxamyl (methyl *N',N'*-dimethyl-*N*-[methylcarbamoyl)oxy]-1-thiooamimidate) in or on cottonseed at 0.2 part per million (ppm).

The data submitted in the petition and other relevant material have been evaluated. The toxicological data considered in support of the proposed tolerance included a two-year rat feeding oncogenicity study and a two-year dog feeding study with no-observed-effect levels (NOEL) of 50 ppm and 100 ppm, respectively; a three-generation rat reproduction study with a NOEL of 50 ppm; and a rat teratogenicity study, which was negative at 300 ppm (highest level tested). Based on the two-year chronic rat feeding/oncogenicity study with a 50 ppm NOEL and using the safety factor of 100, the acceptable daily intake (ADI) for humans is 0.025 milligrams (mg)/kilogram (kg) of body weight (bw)/day. The theoretical maximal residue contribution (TMRC) in the human diet from the previously established tolerance at levels ranging from 0.1 ppm to 10 ppm and the proposed tolerance does not exceed the ADI.

Desirable data that are lacking from the petition are a second oncogenicity study and a second teratology study. In a letter of February 8, 1980, the petitioner indicated that the oncogenicity study would be submitted to the Agency about the third quarter of 1980, and that the teratology study is scheduled to be initiated in March 1980 and completed in late 1980.

Although the evaluation of the oncogenicity potential of oxamyl is not complete, it is concluded, that based on the available data, that the risks are acceptable since the absence of an oncogenic potential is adequately shown in the two-year rat feeding/oncogenic studies.

The metabolism of oxamyl is adequately understood, and an adequate analytical method (gas chromatography using a flame photometric detector) is available for enforcement purposes. No actions are currently pending against continued registration of oxamyl nor are there any other relevant considerations involved in establishing the tolerance. There is no reasonable expectation of secondary residues in eggs, meat, milk, or poultry as delineated in 40 CFR 180.6(a)(3).

The pesticide is considered useful for the purpose for which a tolerance is sought, and it is concluded that the tolerance of 0.2 ppm established by amending 40 CFR 180.303 will protect the public health. It is concluded therefore, that the tolerance be established as set forth below.

Therefore, Subpart C of 40 CFR Part 180 is amended by alphabetically inserting "cottonseed" in the table in § 180.303 to read as follows:

§ 180.303 Oxamyl; tolerances for residues.

* * * * *

Commodity	Parts per million
* * * * *	
Cottonseed	0.2
* * * * *	

Any person adversely affected by this regulation may, on or before September 15, 1980, file written objections with the Hearing Clerk, EPA, Room M-3708 (A-110), 401 M Street, SW, Washington, DC 20460. Such objections should be submitted in quintuplicate and specify the provisions of the regulation deemed to be objectionable and the grounds for the objections. If a hearing is requested the objections must be supported by

grounds legally sufficient to justify the relief sought.

Under Executive Order 12044, EPA is required to judge whether a regulation is "significant" and therefore subject to the procedural requirements of the Order or whether it may follow other "specialized" procedures. This regulation has been reviewed, and it has been determined that it is a specialized regulation not subject to the procedural requirements of Executive Order 12044.

Effective date: August 15, 1980.

(Sec. 408(d)(2), 68 Stat. 514, (21 U.S.C. 346a(e))

Dated: August 11, 1980.

Edwin L. Johnson,

Deputy Assistant Administrator for Pesticide Programs.

[FR Doc. 80-25001 Filed 8-14-80; 8:45 am]

BILLING CODE 6560-01-M

FEDERAL COMMUNICATIONS COMMISSION

47 CFR Part 68

[CC Docket No. 79-143]

Connection of Terminal Equipment to the Telephone Network

AGENCY: Federal Communications Commission.

ACTION: Correction.

SUMMARY: The Commission is correcting errors in Figures 68.306(d) and 68.310(j) which appear in Part 68 of the Commission's rules and regulations. The rules The First Report and Order which concerned registration of and direct connection of customer provided equipment to the telephone network. The First Report and Order was published in the Federal Register on March 31, 1980 at 45 FR 20830.

ADDRESSES: Federal Communications Commission, Washington, D.C. 20554.

FOR FURTHER INFORMATION CONTACT: William J. von Alven, Common Carrier Bureau, (202) 632-6440.

Released: July 31, 1980.

SUPPLEMENTARY INFORMATION:

In the matter of revision of Part 68 of the Commission's rules to Permit Connection of Telephone Equipment, Systems and Protective Apparatus to Certain Private Line Services.

1. Two drawings were inadvertently left out of the First Report and Order in the above entitled matter, FCC 80-88, published in the Federal Register dated March 31, 1980 at 45 FR 20830. See attachment for corrections in § 68.306(d) and § 68.310(j).

Federal Communications Commission.

William J. Tricarico,

Secretary.

BILLING CODE 6712-01-M

1. Figure 68.306(d) should be added to appear just after paragraph (d)(4)(iii) of 68.306.

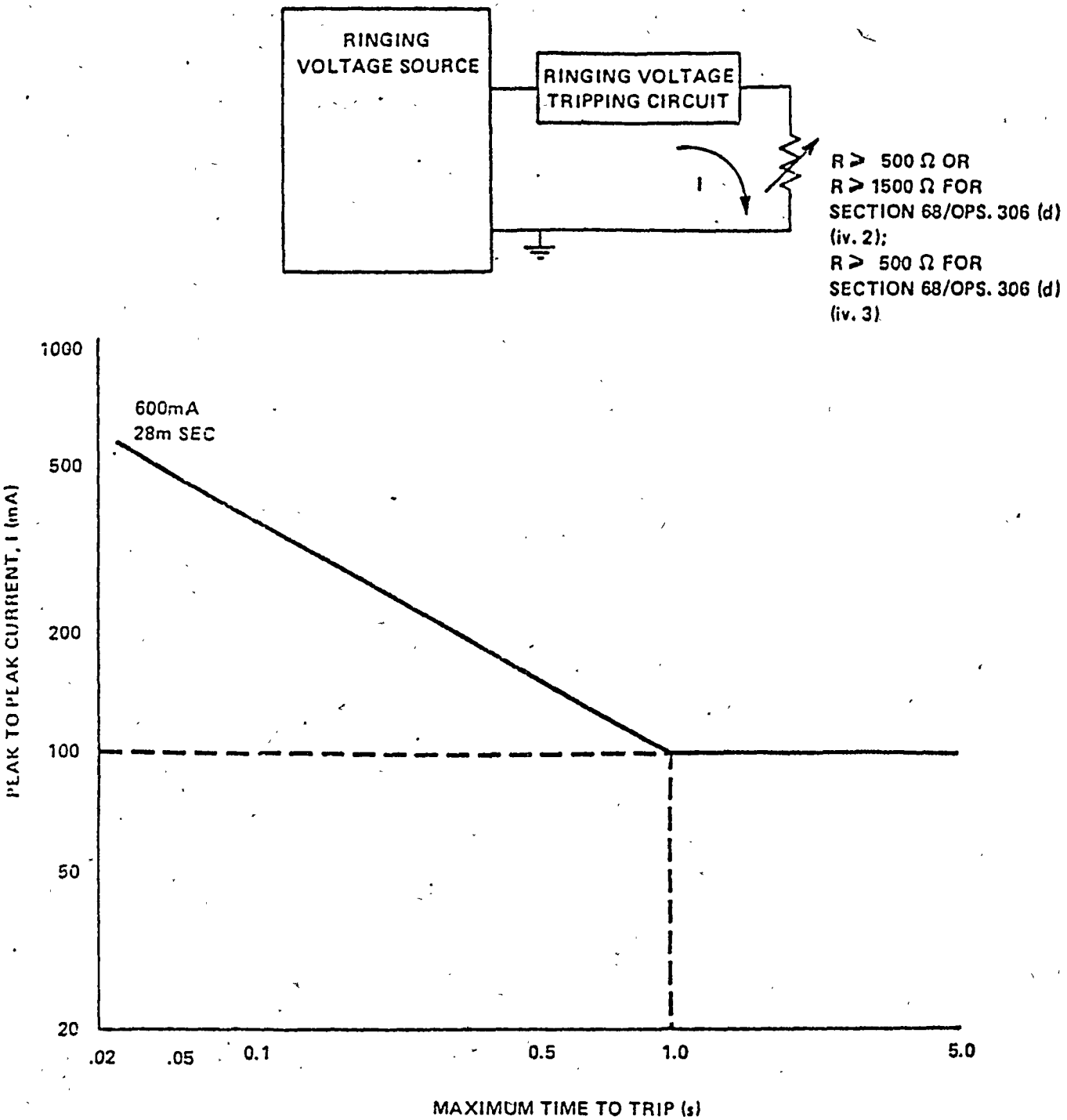

RINGING VOLTAGE TRIP CRITERIA

Fig. 68.306(d)

2. Figure 68.310(j) should be added to appear just after figure 68.310(g).

REQUIRED TERMINATION FOR CONNECTIONS TO NONREGISTERED EQUIPMENT:

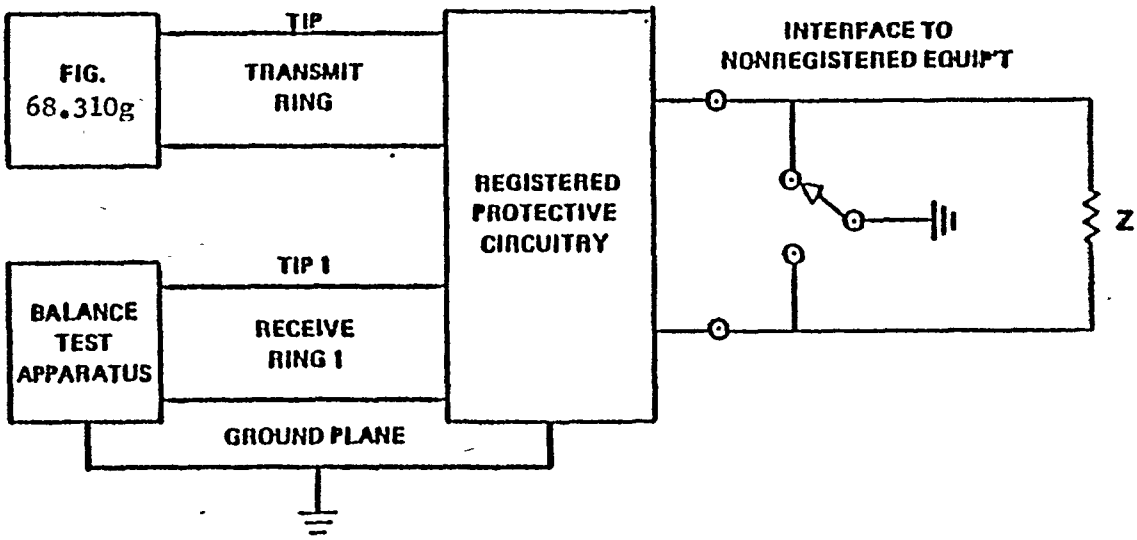

NOTE:

– Z – SELECTED SO THAT THE REFLECTED IMPEDANCE AT TIP 1 AND RING 1 IS 600 ohms.

– CONFIGURATION SHOWN IS FOR MEASUREMENT OF RECEIVE PAIR.

Fig. 68.310(j)
4 Wire

[FR Doc. 24948 Filed 8-14-80; 8.45 am]
BILLING CODE 6712-01-C

INTERSTATE COMMERCE COMMISSION

49 CFR Part 1033

[Amdt. No. 1 to Rev. S.O. No. 1381]

Indiana Interstate Railway Co., Inc. Authorized To Operate Over Tracks Leased From the State of Indiana

Decided August 8, 1980.

AGENCY: Interstate Commerce Commission.

ACTION: Amendment No. 1 to Revised Service Order No. 1381.

SUMMARY: This order amends Revised Service Order No. 1381 by extending its expiration date until 11:59 p.m., September 30, 1980. Revised Service Order No. 1381 authorizes Indiana Interstate Railway Company, Inc. to operate over tracks leased from the State of Indiana, and this extension will permit the Commission time to act on Indiana Interstate's authority application filed July 28, 1980.

EFFECTIVE DATE: 11:59 p.m., July 31, 1980, and continuing in effect until 11:59 p.m., September 30, 1980, unless otherwise modified, amended, or vacated by order of this Commission.

FOR FURTHER INFORMATION CONTACT: M. F. Clemens, Jr. (202) 275-7840.

SUPPLEMENTARY INFORMATION: Upon further consideration of Revised Service Order No. 1381 (44 FR 35227 and 41637), and good cause appearing therefor:

§ 1033.1381 [Amended]

It is ordered, That, § 1033.1381 *Indiana Interstate Railway Company, Inc. authorized to operate over tracks leased from the State of Indiana,* Revised Service Order No. 1381 is amended by substituting the following paragraph (e) for paragraph (e) thereof:

(e) *Expiration date.* The provisions of this order shall expire at 11:59 p.m., September 30, 1980, unless modified, amended or vacated by order of this Commission.

Effective date. This amendment shall become effective at 11:59 p.m., July 31, 1980.

This action is taken under the authority of 49 U.S.C. 10304-10305 and 11121-11126.

This amendment shall be served upon the Association of American Railroads, Car Service Division, as agent of the railroads subscribing to the car service and car hire agreement under the terms of that agreement and upon the American Short Line Railroad Association. Notice of this amendment shall be given to the general public by depositing a copy in the Office of the Secretary of the Commission at Washington, D.C., and by filing a copy with the Director, Office of the Federal Register.

By the Commission, Railroad Service Board, members Joel E. Burns, Robert S. Turkington and John H. O'Brien.

Agatha L. Mergenovich,

Secretary.

[FR Doc. 80-24789 Filed 8-14-80; 8:45 am]

BILLING CODE 7035-01-M

DEPARTMENT OF THE INTERIOR

Fish and Wildlife Service

50 CFR Part 32

Opening of Certain National Wildlife Refuges in Arizona, California and New Mexico; Hunting

AGENCY: U.S. Fish and Wildlife Service, Department of the Interior.

ACTION: Special regulations.

SUMMARY: The Director has determined that the opening to hunting of migratory game birds on certain National Wildlife Refuges is compatible with the objectives for which the area were established, will utilize a renewable natural resource, and will provide additional recreational opportunity to the public. These special regulations describe the conditions under which hunting will be permitted on portions of certain National Wildlife Refuges in Arizona, California and New Mexico.

DATE: Effective on August 15, 1980 from September 1, 1980 through January 31, 1981.

FOR FURTHER INFORMATION CONTACT: The Area Manager or appropriate Refuge Manager at the address or telephone number listed below:

Albert W. Jackson, Area Office Manger, U.S. Fish and Wildlife Service, 2953 West Indian School Road, Phoenix, AZ 85017. Telephone: 602-241-2487.

Wesley V. Martin, Refuge Manager, Cibola National Wildlife Refuge, P.O. Box AP, Blythe, CA 92225. Telephone: 714-922-2129.

Tyrus W. Berry, Refuge Manager, Havasu National Wildlife Refuge, P.O. Box A, Needles, CA 92363. Telephone: 714-326-3853.

Gerald E. Duncan, Refuge Manager, Imperial National Wildlife Refuge, P.O. Box 2217, Martinez Lake, AZ 85364. Telephone: 602-783-3400.

LeMoyne B. Marlett, Refuge Manager, Bitter Lake National Wildlife Refuge, P.O. Box 7, Roswell, NM 88201. Telephone: 505-622-6755.

Ronald L. Perry, Refuge Manager, Bosque del Apache National Wildlife Refuge, P.O. Box 1246, Socorro, NM 87801. Telephone: 505-835-1828.

Ronald L. Perry, Refuge Manager, Sevilleta National Wildlife Refuge, P.O. Box 1246, Socorro, NM 87801. Telephone: 505-835-1828.

SUPPLEMENTARY INFORMATION:

General

Hunting of migratory game birds on portions of the following refuges shall be in accordance with applicable State and Federal regulations, subject to additional special regulations and conditions as indicated. Portions of refuges which are open to hunting are designated by signs and/or delineated on maps available at the above addresses. Vehicular travel is restricted to designated roads and trails.

The Refuge Recreation Act of 1962 (16 U.S.C. 460k) authorizes the Secretary of the Interior to administer such areas for public recreation as an appropriate incidental or secondary use only to the extent that it is practicable and not inconsistent with the primary objectives for which the area was established. In addition, the Refuge Recreation Act requires that before any area of the refuge system is used for forms of recreation not directly related to the primary purposes and functions of the area, the Secretary must find that: (1) Such recreational use will not interfere with the primary purposes for which the area was established; and (2) funds are available for the development, operations, and maintenance of the permitted forms of recreation.

The recreational use authorized by these regulations will not interfere with the primary purposes for which these refuges were established. This determination is based upon consideration of, among other things, the Service's Final Environmental Statement on the operation of the National Wildlife Refuge System published in November 1976. Funds are available for the administration of the recreational activities permitted by these regulations.

§ 32.12 Special regulations; migratory game birds; for individual wildlife refuge areas.

Listed migratory game bird species may be hunted on the following refuges in accordance with applicable state regulations:

Arizona and California

Cibola National Wildlife Refuge

Mourning and white-winged doves.

Arizona First season: Mourning doves and white-winged doves from September 1 through September 28, 1980

inclusive. Shooting hours will be from ½ hour before sunrise until noon.

Second season: Mourning doves only from November 28, 1980 through January 8, 1981 inclusive. Shooting hours will be from noon to sunset.

California: Mourning doves and white-winged doves in accordance with the California State regulations and special refuge regulations. First season: September 1 through September 30, 1980. Second season: November 15 through December 4, 1980 inclusive.

Special conditions: (1) Up to two (2) dogs per hunter may be used for the purpose of hunting and retrieving. (2) Hunting is prohibited within one-fourth mile of any occupied dwelling or 250 yards from any farm worker. Hunting is also prohibited within 50 yards of any road or levee. (3) Vehicles are prohibited from driving across farm fields or through any undefined trail or road. All off-road vehicles are prohibited. (4) In Arizona, both Zone I and Zone III are closed to hunting. (5) Construction of pits or permanent blinds is prohibited. (6) Camping overnight on the refuge is prohibited. (7) Possession of all handguns and all .22 caliber rimfire firearms is prohibited. (8) Hunting in the floodplain (between the levee and river) is prohibited.

Havasu National Wildlife Refuge

Mourning doves and White-winged doves.

Arizona: Topock Marsh and Topock Gorge: Mourning doves from September 1 through October 20, 1980. White-winged doves from September 1 through September 28, 1980.

Bill Williams Unit: First season: Mourning doves and white-winged doves from September 1 through September 28, 1980. Shooting hours will be from ½ hour before sunrise until noon.

Second season: Mourning doves only from November 28, 1980 through January 8, 1981 inclusive. Shooting hours will be from noon to sunset.

California: Mourning doves and white-winged doves in accordance with California State regulations and special refuge regulations. First season: September 1 through September 30, 1980. Second season: November 15 through December 4, 1980 inclusive.

Special conditions: (1) Hunting is prohibited within one-fourth mile of any occupied dwelling or concession operation. (2) Hunting at Pintail Slough will be permitted only on Fridays, Saturdays, and Sundays. Pintail Slough is comprised of all refuge lands north of the north dike. (3) Hunting at the Bill Williams Unit is only permitted on refuge land which lies south of the Planet Ranch Road. (4) Up to two (2) dogs per hunter are permitted for the purpose of hunting and retrieving game. (5) Neither hunters nor dogs may enter areas closed to hunting to retrieve game. (6) Pits may not be dug, and permanent blinds may not be constructed. Hunters may not have possessory rights to any blinds. Temporary blinds may be made of native dead vegetation. Any materials brought on the refuge for blind construction must be removed at the end of each hunt.

Imperial National Wildlife Refuge

Arizona: Mourning doves only in accordance with Arizona State regulations and special refuge regulations from November 28, 1980 through January 8, 1981 inclusive.

California: Mourning doves and white-winged doves in accordance with California State regulations and special refuge regulations. Second season only: November 15 through December 4, 1980 inclusive.

Special conditions: (1) In both Arizona and California, hunting will be only during the second (last) segment of the hunting season. (2) Up to two (2) dogs per hunter may be used for the purpose of hunting and retrieving. (3) Pits and/or permanent blinds are prohibited.

New Mexico: Bitter Lake National Wildlife Refuge

Mourning and white-winged doves and teal ducks.

Special conditions: The refuge is open to public access in accordance with New Mexico State regulations and special refuge regulations listed. (1) Steel (iron) shot shotgun ammunition only may be used for the taking of doves on the South Refuge Unit (Area C) during any period when a duck or waterfowl season runs concurrently with a dove season. (2) Steel (iron) shot shotgun ammunition only may be used for the taking of teal ducks on the South Refuge Unit (Area C), and it will not be permissible to possess shotgun ammunition containing other than steel (iron) shot in this unit during any waterfowl season. (3) Up to two (2) dogs per hunter may be used for the purpose of hunting and retrieving. (4) Pits and/or permanent blinds are prohibited. (5) Entrance into closed areas by hunters or dogs for retrieving of game or for any other reason is prohibited.

Bosque del Apache National Wildlife Refuge

Mourning and white-winged doves.

Special conditions: The refuge is open to public access in accordance with New Mexico State regulations and special refuge regulations from 1 hour before sunrise to ½ hour after sunset only.

Sevilleta National Wildlife Refuge

Mourning and white-winged doves and teal ducks.

Special conditions: The refuge is open to public access in accordance with New Mexico State regulations and special refuge regulations listed. (1) No camping is permitted. (2) Parking will be limited to areas as posted and designated on hunt map. (3) There will be no entry to the hunt area earlier than 2 hours before sunrise. (4) Pits and/or permanent blinds are prohibited. (5) All hunters must be out of the hunt area by 2 hours after shooting hours. (6) Fires of any type are prohibited. (7) Unloaded firearms that are dismantled or cased may be transported through the closed area over posted routes of travel.

The provisions of these special regulations supplement the regulations which govern on wildlife refuge areas generally which are set forth in Title 50, Code of Federal Regulations, Part 33. The public is invited to offer suggestions and comments at any time.

Note.—The Fish and Wildlife Service has determined that this document does not contain a major proposal requiring preparation of an economic impact statement under Executive Order 11929 and OMB Circular A-107.

Albert W. Jackson,

Area Manager, Fish and Wildlife Service, Phoenix, Ariz.

August 7, 1980.

[FR Doc. 80-24724 Filed 8-14-80; 8:45 am]

BILLING CODE 4310-55-M

Proposed Rules

Federal Register
Vol. 45, No. 160
Friday, August 15, 1980

This section of the FEDERAL REGISTER contains notices to the public of the proposed issuance of rules and regulations. The purpose of these notices is to give interested persons an opportunity to participate in the rule making prior to the adoption of the final rules.

DEPARTMENT OF AGRICULTURE

Federal Crop Insurance Corporation

7 CFR Part 427

[Amdt. No. 3]

Oat Crop Insurance Regulations

AGENCY: Federal Crop Insurance Corporation.

ACTION: Proposed rule.

SUMMARY: This proposed rule amends the Oat Crop Insurance Regulations by updating the list of counties approved by the Board of Directors of the Federal Crop Insurance Corporation for oat crop insurance effective with the 1981 and succeeding crop years. This proposed rule is promulgated under the authority contained in the Federal Crop Insurance Act, as amended.

DATE: Written comments, data, and opinions on this proposed rule must be submitted not later than October 14, 1980, to be sure of consideration.

ADDRESS: Written comments on this proposed rule should be sent to the Manager, Federal Crop Insurance Corporation, U.S. Department of Agriculture, Washington, D.C., 20250

FOR FURTHER INFORMATION CONTACT: Peter F. Cole, Secretary, Federal Crop Insurance Corporation, U.S. Department of Agriculture, Washington, D.C. 20250, telephone 202-447-3325.

Actions of this kind were anticipated under the provisions of 7 CFR 427.1, and were generally considered in the Final Impact Statement (FIS) prepared for that action. However, for actions related to the action covered by the original FIS, but which were not specifically discussed in the analysis, an addendum has been added to cover the new issue.

Thus, the amended FIS describing the options considered in developing this proposed rule and the impact of implementing each option is available from the above-named individual.

SUPPLEMENTARY INFORMATION: This rule has been reviewed under USDA procedures established in Secretary's Memorandum No. 1955 (August 25, 1978), to implement Executive Order No. 12044 (March 23, 1978), and has been classified as "not significant".

On Monday, October 22, 1979, the Federal Crop Insurance Corporation (FCIC) published the Oat Crop Insurance Regulations (7 CFR Part 427) in the Federal Register (44 FR 60701) as a final rule prescribing procedures for insuring oats effective with the 1980 crop year.

In accordance with the provisions of 7 CFR 427.1, an Appendix "B" listed the counties where such insurane was available (appearing at 44 FR 60708). This Appendix "B" was updated to include counties approved for the 1980 crop year by the Board of Directors of the Corporation in Amendment No. 1 appearing at 44 FR 75373, published on Thursday, December 20, 1979.

Additional counties have been approved by the Board of Directors effective for the 1981 crop year, necessitating revisions and reissuance of Appendix "B" as Amendment No. 3 below.

All written submissions made pursuant to this notice will be available for public inspection in the Office of the Manager during regular business hours, 8:15 a.m. to 4:45 p.m., Monday through Friday.

Proposed Rule

Accordingly, pursuant to the authority contained in the Federal Crop Insurance Act, as amended (7 U.S.C. 1501 *et seq.*), the Federal Crop Insurance Corporation proposes to revise and reissue Appendix "B" as Amendment No. 3 which will supersede Amendment No. 1 (44 FR 75373) to 7 CFR Part 427 Oat Crop Insurance Regulations effective with the 1981 crop year and which shall remain in effect until amended or superseded, to read as follows:

Appendix "B"

Counties Designated for Oat Crop Insurance—7 CFR Part 427

In accordance with the provisions of 7 CFR 427.1, the following counties are designated for oat crop insurance:

California

Modoc

Illinois

Bureau
Carroll
Henry
Jo Daviess
Ogle
Stephenson

Iowa

Adair
Adams
Allamakee
Appanoose
Audubon
Benton
Black Hawk
Boone
Bremer
Buchanan
Buena Vista
Butler
Calhoun
Carroll
Cass
Cedar
Cerro Gordo
Cherokee
Chickasaw
Clarke
Clay
Clayton
Clinton
Crawford
Dallas
Davis
Decatur
Delaware
Des Moines
Dickinson
Dubuque
Emmet
Fayette
Floyd
Franklin
Fremont
Greene
Grundy
Guthrie
Hamilton
Hancock
Hardin
Harrison
Henry
Howard
Humboldt
Ida
Iowa
Jackson
Jasper
Jefferson
Johnson
Jones
Keokuk
Kossuth
Lee
Linn
Louisa
Lucas
Lyon
Madison
Mahaska
Marion
Marshall
Mills
Mitchell
Monona
Monroe
Montgomery
Muscatine
O'Brien
Osceola
Page
Palo Alto
Plymouth
Pocahontas
Polk
Pottawattamie
Poweshiek
Sac
Scott
Shelby
Sioux
Story
Tama
Taylor
Union
Van Buren
Wapello
Warren
Washington
Webster
Winnebago
Winneshiek
Woodbury
Worth
Wright

Michigan

Isabella
Kent
Lapeer
Montcalm

Minnesota

Anoka
Becker
Benton
Big Stone
Blue Earth
Brown
Carver
Chippewa
Chisago
Clay
Cottonwood
Dakota
Dodge
Douglas
Faribault
Fillmore
Freeborn
Goodhue
Grant
Houston
Isanti
Jackson
Kanabec
Kandiyohi
Kittson
Lac qui Parle
LeSueur
Lincoln
Lyon
McLeod
Mahnomen
Marshall
Martin
Meeker
Mille Lacs
Morrison
Mower
Murray
Nicollet
Nobles
Norman
Omsted
Otter Tail
Pennington
Pine
Pipestone
Polk
Pope
Red Lake
Redwood

Renville
Rice
Rock
Roseau
Scott
Sherburne
Sibley
Stearns
Steele
Stevens
Swift
Todd
Traverse
Wabasha
Wadena
Waseca
Washington
Watonwan
Wilkin
Winona
Wright
Yellow Medicine

Montana

Phillips
Valley

Nebraska

Boyd
Cedar
Dakota
Dixon
Knox
Pierce
Wayne
Thurston

New York

Cayuga
Genesee
Wayne

North Dakota

Adams
Barnes
Benson
Billings
Bottineau
Bowman
Burke
Burleigh
Cass
Cavalier
Dickey
Divide
Dunn
Eddy
Emmons
Foster
Golden Valley
Grand Forks
Grant
Griggs
Hettinger
Kidder
La Moure
Logan
McHenry
McIntosh
McKenzie
McLean
Mercer
Morton
Mountrail
Nelson
Oliver
Pembina
Pierce
Ramsey
Ranson
Renville
Richland
Rolette
Sargent
Sheridan
Sioux
Slope
Stark
Steele
Stutsman
Towner
Traill
Walsh
Ward
Wells
Williams

Oregon

Klamath

Ohio

Coshocton
Holmes
Lorain
Stark

Pennsylvania

Berks
Chester
Crawford
Cumberland
Dauphin
Northumberland
Perry

South Dakota

Aurora
Beadle
Bon Homme
Brookings
Brown
Brule
Buffalo
Campbell
Charles Mix
Clark
Clay
Codington
Davison
Day
Deuel
Douglas
Edmunds
Faulk
Grant
Gregory
Hamlin
Hand
Hanson
Harding
Hughes
Hutchinson
Hyde
Jerauld
Kingsbury
Lake
Lincoln
Lyman
McCook
McPherson
Marshall
Miner
Minnehaha
Moody
Potter
Roberts
Sanborn
Spink
Sully
Tripp
Turner
Union
Walworth
Yankton
Ziebach

Wisconsin

Barron
Brown
Buffalo
Calumet
Chippewa
Clark
Columbia
Crawford
Dane
Dodge
Door
Dunn
Eau Claire
Fond du Lac
Grant
Green
Green Lake
Iowa
Jackson
Jefferson
Juneau
Kenosha
Kewaunee
La Crosse
Marathon
Marquette
Monroe
Oconto
Outagamie
Pepin
Pierce
Polk
Portage
Racine
Richland
Rock
St. Croix
Saulk
Shawano
Sheoygan
Trempealeau
Vernon
Walworth
Washington
Waukesha
Waupaca
Waushara
Winnebago
Wood

(Secs 506, 516, 52 Stat. 73, as amended, 77, as amended (7 U.S.C. 1501, 1516))

Note.—The reporting requirements contained herein have been approved by the Office of Management and budget in accordance with the Federal Reports Act of 1942 and OMB Circular A-40.

This action will not have a significant effect specifically on area or community development; therefore, review as required by OMB Circular A-95 is inapplicable.

Approved by the Board of Directors on July 14, 1980.

Dated: August 8, 1980.

Peter F. Cole,

Secretary, Federal Crop Insurance Corporation.

Approved by: Roland Wentzel, *Acting Manager.*

[FR Doc. 80-24725 Filed 8-14-80; 8:45 am]

BILLING CODE 3410-08-M

Commodity Credit Corporation

7 CFR Part 1435

Price Support for 1980 Crop; Sugar Beets and Sugarcane

AGENCY: Commodity Credit Corporation, USDA.

ACTION: Proposed rule.

SUMMARY: The Secretary of Agriculture gives notice that he is considering a proposal to support prices to domestic producers of 1980 crop sugar beets and sugarcane either through purchase agreements (USDA's preferred option) made by the Commodity Credit Corporation (CCC) with sugar processors, or by nonrecourse loans made by CCC to sugar processors (USDA's alternative option).

The proposed price support programs would be implemented under existing statutory authorities and would provide continuation of price support coverage for sugar beet and sugarcane producers which would not otherwise exist.

DATE: Comments on the proposed action must be received on or before August 29, 1980, to be assured of receiving consideration.

ADDRESS: Mail comments to Sugar Branch, Procurement and Sales Division, ASCS-USDA, Room 5768, South Building, P.O. Box 2415, Washington, D.C. 20013.

FOR FURTHER INFORMATION CONTACT: Laurence E. Ackland, Sugar Branch, 202-447-5647. The Draft Impact Analysis detailing the options considered in developing this proposed rule and the impact of implementing each option is published in its entirety below in "Supplementary Information."

SUPPLEMENTARY INFORMATION: This proposed action has been reviewed under USDA procedures established in Secretary's Memorandum 1955 to implement Executive Order 12044, and has been classfied significant.

Section 301 of the Agricultural Act of 1949, as amended (7 U.S.C. 1447), provides the Secretary of Agriculture with discretionary authority to make price support available for 1980 crop sugar beets and sugarcane. Section 401(b) of the Act (7 U.S.C. 1421(b)) requires, in the case of any commodity for which price support is discretionary, that specified factors be taken into consideration in determining whether a price support operation shall be undertaken and the level of such support.

The discretionary authority and specified factors cited are the same as were applicable to the price support program established for the 1979 crops of sugar beets and sugarcane (44 FR 45596). These factors are detailed for the 1980 crop price support proposal in the Draft Impact Analysis, which presents three options for the 1980 crop:

1. Price support for producers of sugar beets and sugarcane achieved through a purchase agreement program.

2. Price support for producers of sugar beets and sugarcane through a nonrecourse loan program.

3. No price support.

The purchase agreement program proposed as the preferred option would include the following major provisions:

(1) The basic purchase rates for raw cane sugar and for refined beet sugar are calculated to support sugar beet and sugarcane prices at 43 percent of the estimated July 1980 parity prices.

(2) The purchase rate for refined beet sugar would reflect the long-term relationship (1.10 to 1.00) between refined beet sugar net selling prices and raw cane sugar prices. After adjustment to reflect the proper price relationship, the estimated average 1980 crop fixed marketing costs (which are incurred by beet processors regardless of the disposition of the sugar would be added to make up the basic purchase rate for refined beet sugar.

(3) Regional purchase rates for sugar and specified minimum support prices for sugar beets and sugarcane would apply to the 1980 crop. Such purchase and price support rates would be based on the estimated average costs of transporting 1980 crop sugar from the processing region to destination.

(4) Payment by participating processors to producers of less than the required minimum support price per ton of sugar beets or sugarcane because of an existing marketing custom or practice would not be permitted.

(5) Purchase agreements would be issued and serviced by State and county ASCS offices.

The loan program presented as an alternative option would be patterned after the 1979 crop nonrecourse loan program and would include the following major provisions and changes:

(1) Loan rates would be the same as the purchase rates previously described for a purchase agreement program. Loan rates and price support rates would be established regionally and would be identical to the regional rates described for a purchase agreement program. Processors, however, would be required to pay interest on the principal of the loan even upon forfeiture of loan collateral. The latter modification would be made because of the treatment of interest charges under most contracts between independent processors and growers. Most such contracts provide that interest costs (and in certain instances, transportation costs) must be borne entirely by the processor, while the grower payment is based on a percentage of net proceeds without regard to interest costs. If interest is not charged upon forfeiture, these types of contracts sometimes result in a situation where it is more financially desirable for the processor to forfeit sugar, rather than to redeem and pay interest, even when the market price for sugar is more than adequate to cover the principal and interest on the loan. Thus, when forfeiture occurs, there is no interest cost for the processor to absorb, while in the latter situation the interest charge may reduce the net return to the processor to such an extent that it would be below what the processor would receive if it simply forfeited the commodity. The converse is true, however, of net returns received by the grower, i.e., redemption and sale in the market would result in higher returns to the grower than would forfeiture. To this extent, then, the economic interests of the processor and the grower are not completely parallel. The charging of interest upon forfeiture, however, would largely eliminate this anomalous situation.

(2) Under the 1979 crop program a processor could, with prior permission of the loan making office, substitute as loan collateral other sugar of the same or a subsequent crop which was located in a different storage facility. A 1980 crop loan program would eliminate this provision. The frequent removals of loan collateral before replacement collateral could be verified as being in place have, at times, jeopardized CCC's security interest. Since the concept of substitution of loan collateral was originated in order to permit processors to market sugar to the best locational advantage, it is now believed that the Department would better achieve this goal under a loan program by permitting processors to obtain new loans, after the normal loan availability period, to "replace" redeemed loan quantities. Processors would also be permitted to reoffer sugar that had been redeemed from CCC loan. Under these procedures, processors could continue to market to best advantage without having to reduce quantities under CCC loan.

The Draft Impact Analysis, in its entirety, follows.

Draft Impact Analysis

Date: July 25, 1980.

Contact: Laurence E. Ackland.

Agency: USDA–ASCS, Procurement & Sales Division, Rm 5764–S, Washington, D.C. 20250.

Phone: (202) 447–5647.

I. Title: 1980 Crop Sugar Price Support Program for Sugar Beets and Sugarcane

II. Nature of Proposed Action, Groups Impacted & Duration

A. *Consideration.* Whether to have a 1980 sugar price support program, and if so, what type of program to offer.

B. *Groups impacted.* Groups impacted. Groups directly impacted include sugarcane and sugar beet producers and processors. Those indirectly impacted include consumers, manufacturers of artificial sweetners, refiners and foreign sugar exporters.

C. *Duration.* Program provisions would be effective for the 1980 crop year.

III. Purpose and Need for the Action

A. *Legal basis for the consideration.* Section 301 of the Agricultural Act of 1949, as amended, provides the Secretary of Agriculture discretionary authority to offer a price support program for sugar. Section 401(b) of the Act (7 U.S.C. 1421(b)) requires that, whenever a commodity price support program is discretionary, prior consideration be given to the following eight factors in determining whether a price support operation shall be undertaken and the level of such support:

1. The supply of the commodity in relation to the demand therefor.
2. The price levels at which other commodities are being supported.
3. The availability of funds.
4. The perishability of the commodity.
5. The importance of the commodity to agriculture and the national economy.
6. The ability to dispose of stocks acquired through a price-support operation.
7. The need for offsetting temporary losses of export markets.
8. The ability and willingness of producers to keep supplies in line with demand.

Each of these factors will be analyzed in the following sections.

B. *Goals.* The goal of the 1980 program would be to contribute toward balance between maintenance of a domestic production base and adequate supplies of sugar and products containing sugar.

C. *World Situation/Outlook.* World stocks are down from record levels and further reductions may occur. Estimated world production for crop year 1979–80 will total around 85.4 million metric tons (mmt.) (raw value)—7.1 mmt. below the record level set during 1977–78 (Table 1).

Table 1.—*World Production, Consumption, and Ending Stocks (Raw Value), 1977–78—1980–81*

Crop year (September–August)	Production			Total consumption	Total ending stocks	Ending stocks as a percent of consumption (percent)
	Cane	Beet	Total			
	(In million metric tons)					
1977–78	57.5	35.0	92.5	85.6	31.0	36.21
1978–79	55.2	35.2	90.4	89.4	32.0	35.79
1979–80 (estimated)	52.0	33.4	85.4	91.0	26.4	29.01
1980–81 (projected)	54.0	33.0	87.0	89.0	24.4	27.40

World consumption during 1979/80 is expected to exceed world production by about 5.6 mmt. Final stocks will probably represent about 29 pecent of global consumption requirements. This stock-to-consumption ratio would be substantially lower than the record high level of 36 percent for 1978–79. A further decline is projected for 1980–81. The intermediate term outlook is for a leveling of production with global consumption increasing 2 to 3 mmt. per year. With world consumption continuing to exceed production, stocks will continue to decline.

D. *United States (U.S.) Situation/Outlook.* The U.S. is the sixth largest producer of sugar in the world—producing an annual average of 6.3 million tons of sugar for the period 1973–1979, or about 6.7 percent of world production (Table 2). U.S. production during that time ranged from a low of 5.7 million tons in 1974 to a high of 7.25 million tons in 1975. Production from the 1980 crop is expected to total about 6.0 million tons.

Table 2.—*Domestic Production, Imports and Consumption, 1973–80*

[Production is on a crop year basis, imports and consumption are on calendar year basis—1,000 short tons raw value]

	Production			Imports		Consumption		
	Cane	Beet	Total	Foreign	Territories	Total	Total	Per capita
Year:								
1973	2,794	3,216	6,020	5,329	79	5,408	11,429	101.5
1974	2,793	2,916	5,709	5,770	157	5,927	10,495	96.5
1975	3,233	4,019	7,252	3,882	96	3,978	10,302	90.2
1976	3,036	3,895	6,931	4,658	203	4,861	10,863	94.6
1977	2,952	3,108	6,060	6,138	102	6,240	11,069	95.7
1978	2,816	3,289	6,105	4,683	52	4,735	10,869	93.1
1979 [1]	2,931	2,884	5,815	5,026	47	5,073	10,756	91.1
1980 [2]	2,993	3,007	6,000	4,710	90	4,800	10,800	89.0

[1] Preliminary. [2] Estimate.

NOTE.—During 1973–79, domestic consumption averaged about 10.8 million tons per year. Therefore, the U.S. relied on imports for about 42 percent of its annual sugar requirements. The U.S. is the largest sugar importer from the world free market. Thus, the U.S. has a long-range interest in supporting a viable domestic sugar industry. The small quantity of sugar exported by the U.S. is generally refined sugar with specialized applications, for which the demand remains stable.

E. *Background of sugar price support program.* A price support program removes some of the uncertainty from the industry by providing producers and processors assurance that they have a market for and return from their product, while avoiding CCC accumulation of large inventories.

Loans/purchase agreements are made for 9 month periods and would be available until 3 months after completion of processing. Perishability is not a serious problem because, under proper storage conditions, sugar can be stored for more then 18 months with little or no deterioration in quality. Should the Commodity Credit Corporation (CCC) acquire stocks, sales programs are available for their orderly disposition.

IV. *Options Considered*

A. *Listing of options for 1980 sugar price support program.* 1. *Nonrecourse loan program*—a. National average loan rate (raw cane sugar) 14.50 cents/pound.

b. National average loan rate (refined beet sugar) 16.87 cents/pound.

(Interest is charged to processor whether the loan is redeemed or forfeited.)

2. *Purchase agreement program.*—a. National average purchase rate (raw cane sugar) 14.50 cents/pound.

b. National average purchase rate (refined beet sugar) 16.87 cents/pound.

3. *No program.*

B. *Background.* Rates under Options 1 and 2 are sufficient to provide price support to both sugar beet and sugarcane producers at approximately 43 percent of estimated July 1980 parity levels ($25.01 and $19.78 per net ton of average quality sugar beets and sugarcane, respectively). This equals the percentage level of support for 1979 crop sugar beets and sugarcane. The 1980 support levels for other major commodities will range from 39.8 percent for soybeans to 80 percent for milk.

The spread between refined beet sugar (16.87 cents/pound) and raw cane sugar rates (14.50 cents/pound) is based on the relationship between refined beet sugar net selling prices and raw sugar prices. Data for 1969 through 1978 indicate that the net selling price for refined beet sugar averaged 110 percent of the price for raw cane sugar. Accordingly, the net selling price guaranteed by the 1980 crop refined beet sugar loan or purchase rate would be 15.95 cents per pound, which is 110 percent of 14.50 cents per pound (the proposed loan or purchase rate for raw sugar), plus 0.92 cents per pound for estimated fixed marketing expenses.

Net selling price is determined by deducting fixed marketing expenses from the gross selling price. Fixed marketing expenses include insurance, taxes, advertising, sales promotion, salaries, storage warehousing, handling, and other related costs. The price support level proposed for 1980 crop sugar beets would, therefore, be achieved by setting the refined beet sugar loan or purchase rate at 16.87 cents per pound.

All loan or purchase and price support rates would vary regionally, based on estimated average transportation costs between processing regions and normal market destinations. Proposed rates are shown in Appendix Tables 1 & 2.

V. *Expected Impacts*

A. *Impact on main purpose and need.* Supply-use projections for the U.S. sugar industry during crop year 1980 indicate market prices will substantially exceed price support loan or purchase levels proposed under Option 1 (nonrecourse loans) and Option 2 (purchase agreements) raw cane sugar. Thus, price support programs under Options 1 and 2 would not be likely to result in CCC accumulation of stocks, but would still guarantee the domestic industry a market for its output should volatile world market prices drop below domestic support levels.

An analysis of the differences in net returns to independent sugarcane processors between Options 1 and 2 under alternative scenarios for program participation is shown in Table 3. The analysis assumes that processors must bear the entire cost of loan interest and transportation. In cases where processors borrow commercially, their returns would be less than shown but the effect on sale or forfeiture to CCC would be unchanged since such loans must be repaid regardless of the disposition of the sugar.

Under Case 1 (no program participation), net returns would be identical between the loan and purchase agreement price support programs. Under Case 2 (initial program participation with processors eventually deciding to sell on the open market), participants in the purchase agreement program would receive the same return as in Case 1, while participants in the loan program would have the additional expense of an interest charge. Under Case 3 (program participation with delivery of stocks to CCC), both options would result in reduced returns compared with Case 1 or 2. However, processor returns under the purchase agreement program would still exceed those under the loan program by the amount of the interest charge.

Table 3.—*Differences in Net Returns to Independent Processors Between Options 1 (Nonrecourse Loan Program) and 2 (Purchase Agreement Program) Under Alternative Scenarios for Program Participation*

[In cents per pound]

Item	Option 1—Loan program	Option 2—Purchase agreement program
Case 1.—No Program Participation		
1. Market price [1]	16.91	16.91
2. Gross return to processor [2]	6.76	6.76
3. Less transportation costs [3]	#−.77	#−.77
4. Net return to processor	5.99	5.99
Case 2.—Program Participation With Processors Eventually Deciding To Sell on Option Market		
1. Market price	16.91	16.91
2. Gross return to processor	6.76	6.76
3. Less transportation costs	−.77	−.77
4. Less interest charge [4]	−1.25	
5. Net return to processor	4.74	5.99
Case 3.—Program Participation With CCC Acquiring Stocks		
1. Loan/purchase rate	14.50	14.50
2. Gross return to processor	5.80	5.80
3. Less interest charge	−1.25	
4. Net return to processor	4.55	5.80

[1] Market price assumed for this example.
[2] Based on assumption that processor's share is 40 percent of delivery price.
[3] Derivation of estimate is in Appendix Table 1.
[4] CCC loan interest based on current 11.5 percent annual rate. No interest for commercial borrowing assumed under either program.

NOTE.—Under Option 3 (no price support program), net returns would equal those under the Case 1 scenario for Options 1 and 2 as long as the market price did not fall below the market price assumed under Case 1. However, the volatility of world markets would create more uncertainty for the domestic sugar industry and processors would have no protection in prices fell drastically.

B. *Cost impacts.* Since the 1980 market price for sugar is expected to exceed the market price assumed in Table 3, a 1980 sugar price support program would be noninflationary.

C. *Other significant economic impacts.* Section 22 of the Agricultural Adjustment Act of 1933, as amended, empowers the President to regulate importation of commodities whenever he finds that such importation renders or tends to render ineffective or materially interferes with the price support or stabilization programs relating to farm commodities. Thus, Option 3 (no price support program) would require that the present Section 22 fee mechanism be terminated when no longer needed in connection with price support programs for prior year crops.

D. *Significant social impacts.* Program options considered in this analysis are not expected to have any health, safety, nutritional, civil rights or institutional impacts.

E. *Distribution of impacts.* Appendix Table 1 lists the major domestic sugar producing areas. All would be affected.

F. *Environmental impact assessment.* The options considered in this statement would have no significant impact on the quality of the human environment. Therefore, neither an Environmental Assessment nor an Environmental Impact Statement is needed.

VI. USDA and Other Federal Cost

Funds necessary to provide a 1980 sugar price support program are available under the statutory borrowing authority of CCC. Currently, about $6 billion of the $20 billion CCC authorization remains available.

Neither Option 2 (purchase agreements) nor Option 3 (no price support program) would likely result in net CCC outlays for the 1981 fiscal year (FY). However, Option 1 (nonrecourse loans) would likely result in FY 1981 outstanding loans of about $44 million which would be repaid in FY 1982. No acquisitions are likely under either option. Table 4 summarizes budget outlays under the various options during FY 1981.

Table 4.—*Estimated Budget Outlays for fiscal year 1981 (1,000 Dollars)*

	Purchase agreement	Loan program	No program
Beginning loans	$102,004	$102,004	$102,004
Loans made	0	225,120	0
Repaid	−102,004	−283,173	102,004
Net outlay	−102,004	−58,053	−102,004
Ending loans	0	[1]43,951	0
Acquistions by CCC (loan purchase)	0	0	0

[1] Would be repaid in FY 1982.

VII. *Sunset Review.* In compliance with Secretary's Memorandum Number 1955 and "Improving USDA Regulations" (43 FR 50988), it is determined after review of these and related regulations contained in 7 CFR 1435 for need, currency, clarity, and effectiveness that no changes be proposed at this time.

VIII. *Public Comment.* Public comment will be solicited by press release and Notice of Proposed Determination published in the Federal Register. Comments and recommendations, including those on any of the regulations outlined in Section VII, will be evaluated and incorporated in the Final Impact Statement.

Approved:

Howard W. Hjort,

Director of Economics, Policy Analysis and Budget.

Table 1.—*Calculation of Proposed 1980 Regional Loan/Purchase Rates for Raw Cane Sugar and Refined Beet Sugar (Cent/Pound)*

Processing region and type of sugar	Regional August transportation costs [1]	Adjustment factor [2]	Regional August loan/purchase rate [3]
Raw cane sugar:			
Louisiana	0.44	0.33	14.83
Florida	.68	.09	14.59
Texas	.88	−.11	14.39
Hawaii	.88	−.11	14.39
Puerto Rico	1.53	−.76	13.74
Weighted national average	.77		14.50

Table 1.—*Calculation of Proposed 1980 Regional Loan/Purchase Rates for Raw Cane Sugar and Refined Beet Sugar (Cent/Pound)—Continued*

Processing region and type of sugar	Regional August transportation costs [1]	Adjustment factor [2]	Regional August loan/purchase rate [3]
Refined beet sugar:			
1. Michigan and Ohio	.76	.83	17.70
2. Minnesota and E½ North Dakota	1.72	−.13	16.74
3. NE½ Kansas; NW¼ of Colorado, Nebraska, and SE¼ of Wyoming	1.99	−.40	16.47
4. SE¼ of Colorado and Texas	1.78	−.19	16.68
5. Montana and NW¼ of Wyoming	1.84	−.25	16.62
6. Idaho east of Owyhee County with east boundary extending north, and, Utah	1.94	−.35	16.52
7. Idaho west of Owyhee County with east boundary extending north; Oregon and Washington	1.94	−.35	16.52
8. Arizona and Colorado	1.00	.59	17.46
Weighted national average [4]	1.59		16.87

[1] For the best sugar regions the cost of transporting sugar to destination was derived from 1979 estimated costs increased (1) by 1.4 percent to adjust 7.6 percent increase used previously to 9.0 percent (2) then by 9.0 percent to arrive at 1980 crop estimated costs.

[2] Calculated by subtracting regional transporting cost from the weighted national average transporting cost.

[3] Calculated by adding the algebraic difference, whether positive or negative, to the basic (weighted national average) rate for refined beet sugar or raw cane sugar.

[4] Weighted on the basis of estimated sugar production in each processing region.

Appendix Table 2.—*Regional Support Prices to Producers Based on National Average Loan/Purchase rates of 14.50 Cents Per Pound of Raw Can Sugar and 16.87 Cents Per Poind of Refined Beet Sugar*

Region	Support prices (dollars per net ton)
Sugarcane:	
Louisiana	18.82
Florida	20.65
Texas	(1)
Hawaii	(2)
Puerto Rico	(3)
Sugar beets:	
Region:	
1	23.06
2	25.09
3	24.68
4	25.00
5	24.91
6	24.76
7	24.76
8	26.17

[1] Derived by multiplying 8.624 cents times the average poinds of cane sugar (raw value) recovered per ton from sugarcane delivered to the processors by all producers, and adjusted by the processor to reflect the quality of the juice (normal juice sucrose and normal juice purity) extracted from the individual producer's sugarcane.

[2] When the delivery point is at the mill, the amount determined by multiplying 9.4974 cents times the total pounds of cane sugar (raw value) recovered per ton from the sugarcane delivered to the processor the individual producer. When delivery point is to trucks in the field, 7.3389 cents is the multiplication factor.

[3] Determined in accordance with the provisions of Puerto Rico Law No. 426—also known as the Puerto Rico Sugar Law—and the rules issued thereunder by the Sugar Board of Puerto Rico.

In the interest of obtaining information which will assist the Secretary in establishing the provisions of a price support program for 1980 crop suguar beets and sugarcane, it is requested that respondents to this invitiation for comments give careful consideration to all of the matters discussed above and to the general provisions of the proposed rule following below, which is presented for the option preferred by the Department.

This regulation has been determined significant under the USDA criteria implementing Executive Order 12044.

I have determined that it would be impracticable and contrary to the public interest to comply with the Department's requirement that 60 days be allowed for public comment on this proposal. The proposed action, if implemented, should not unduly delay the availability of loans to those producing areas where harvest and processing of the 1980 crop has already started. Therefore, the closing date for comments is August 29, 1980.

Prior to taking final action, the Department of Agriculture will give consideration to comments submitted in writing within the comment period. All written submissions made pursuant to this notice will be made available for inspection from 8:15 a.m. to 4:45 p.m., Monday through Friday, in Room 5761—South Building, 14th Street and Independence Avenue, S.W., Washington, D.C. (7 CFR 1.27(b)).

In consideration of the foregoing, it is proposed to amend 7 CFR Part 1435 by adding a new Subpart—Price Support Purchase Agreement Program for 1980 Crop Sugar Beets and Sugarcane—to read as follows:

PART 1435—SUGAR

Subpart—Price Support Purchase Agreement program for 1980 Crop Sugar Beets and Sugarcane

Sec.
1435.76 General statement.
1435.77 Administration.
1435.78 Definitions.
1435.79 Level and method of support and purchase agreement rates.
1435.80 Elgibility requirements.
1435.81 Availability, disbursement, and maturity of purchase agreement.
1435.82 Quantity for purchase agreement.
1435.83 Delivery to CCC and settlement.
1435.84 Processor storage agreement.
1435.85 Micellaneous provisions.
1435.86 Applicable forms.

Authority: Secs. 301–303 and 401 et seq. of the Agricultural Act of 1949, as amended (7 U.S.C. 1447 et seq., 1421 et seq.).

Subpart—Price Support Purchase Agreement Program for 1980 Crop Sugar Beets and Sugarcane

§ 1435.76 General statement.

This subpart contains the regulations which set forth the requirements with respect to price support for the 1980 crop of sugar beets and sugarcane. The Commodity Credit Corporation (CCC) will offer purchase agreements to processors under which processors may elect to sell sugar to CCC upon maturity of the agreements. Only eligible sugar which is in eligible storage shall be accepted for delivery.

§ 1435.77 Administration.

(a) The Procurement and Sales Division, Agricultural Stabilization and Conservation Service (referred to as "ASCS"), will administer this subpart under the general direction and supervision of the Deputy Administrator, Commodity Operations.

(b) In the field, this subpart will be administered by the Kansas City Commodity Office and the Management Field Office (referred to as KCCO and MFO respectively) and designated Agricultural Stabilization and Conservation State and county committees (referred to as State and county committees).

§ 1435.78 Definitions.

(a) "1980 crop" means domestic sugar beets and sugarcane, the substantial portion of which is harvested in the areas indicated below during the following periods:

Sugar producing area	Harvesting period
Sugar beets:	
All States, excluding California and Arizona.	Sept.-Nov. 1980.
California, excluding the southern area.	July 1980-June 1981.
Southern California [1]	Mar.-Sept. 1980.
Arizona-Lowland Area	Apr.-Aug. 1980.
Arizona-Upland Area	Sept. 1980-Jan. 1981.
Sugarcane:	
Puerto Rico	Calendar year 1980.
Hawaii	Calendar year 1980.
Florida	Oct. 1980-May 1981.
Texas	Oct. 1980-May 1981
Louisiana	Oct. 1980-Jan. 1981.

[1] Southern California includes the counties of Imperial, San Diego, Riverside, Orange, San Bernardino, and that part of Los Angeles lying south of the San Gabriel Mountains.

(b) "Eligible producer" means the owner of a portion or all of the sugar beets or sugarcane, including share rent landowners, at the time of harvest and delivery to the processor.

(c) "Sugar" means refined beet sugar, refined cane sugar, raw cane sugar, sugarcane syrup or edible molasses which is (1) processed by a processor from domestically produced sugar beets or sugarcane, and which is (2) not contaminated and does not contain chemicals or other substances poisonous to man or animals.

(d) "Processor" means a person who (1) commercially processes sugar beets into refined sugar or sugarcane into raw sugar, cane syrup or edible molasses: (2) is a commercial refiner of raw cane sugar cooperatively owned by its raw cane sugar processors, or (3) is a processor of sugarcane into raw cane sugar who is also a refiner.

(e) "Raw value" of any quantity of sugar means its equivalent in terms of ordinary commercial raw sugar testing ninety-six degrees by the polariscope.

(f) "Sugar beets or average quality" means sugar beets containing 15.45 percent sucrose.

(g) "Sugarcane of average quality" means (1) for Florida, sugarcane containing 13.97 percent sucrose in normal juice; and (2) for Louisiana, sugarcane containing 13.01 percent sucrose in normal juice of 78.96 percent purity.

(h) "Secretary" means the Secretary of Agriculture or an official who has been designated to act on his behalf.

§ 1435.79 Level and method of support and purchase agreement rates.

(a) *Level of support.* Prices to domestic producers of 1980 crop sugar beets and sugarcane will be supported at average levels estimated to be approximately 43 percent of the parity prices for sugar beets and sugarcane as of July 1980. The general support prices for sugar beets and sugarcane are as specified in § 1435.80(b).

(b) *Method of support.* The support to domestic producers of 1980 crop sugar beets and sugarcane will be made available through purchase agreements with eligible processors.

(c) *Purchase agreement rates.* The basic (weighted average) rates for the 1980 crop shall be 16.87 cents per pound for refined beet sugar and 14.50 cents per pound for cane sugar, raw value, including the cane sugar, raw value, equivalent contained in refined cane sugar, sugarcane syrup and edible molases.

(d) *Locational differentials.* (1) The purchase agreement rate applicable to sugar shall be the rate specified in paragraph (d) (2) and (3) of this section for the region in which such sugar was processed: *Provided,* That in the case of refined or specialty sugar made from raw cane sugar the rate shall be the appropriate regional rate applied to the cane sugar raw value equivalent of the refined or specialty sugar.

(2) The processing regions and applicable purchase agreement rates for refined beet sugar shall be as listed below:

Region number and description	Cents per pound
1—Michigan and Ohio	17.70
2—Minnesota and the eastern half of North Dakota	16.74
3—Northeastern quarter of Colorado; northwestern quarter of Kansas; Nebraska; and the southwestern quarter of Wyoming	16.47
4—Southeastern quarter of Colorado; and Texas	16.68
5—Montana and the northwestern quarter of Wyoming	16.62
6—That part of Idaho east of the eastern boundary of Owyhee county and of such boundary extended northward; and Utah	16.52
7—That part of Idaho west of the eastern boundary of Owyhee county and of such boundary extended northward; Oregon; and Washington	16.52
8—Arizona and California	17.46

(3) The processing regions and applicable purchase agreement rates for cane sugar, raw value, shall be as listed below, except that for such sugar processed in Hawaii or Puerto Rico but delivered to CCC on the mainland of the United States the applicable rate shall be 14.50 cents per pound:

Region	Cents per pound
Florida	14.59
Louisiana	14.83
Texas	14.39
Hawaii	14.39
Puerto Rico	13.74

§ 1435.80 Eligibility requirements.

(a) The maximum quantity of sugar which is eligible to be offered by a processor under the 1980 Price Support Purchase Agreement Program is that quantity of domestic production which is equivalent to the quantity processed by the processor from that part of the 1980 crop grown by eligible producers. Such sugar must be processed and owned by the eligible processor (or jointly owned by eligible processor and eligible producer) offering the sugar.

(b) Eligible processors for the 1980 crop are those who, as a condition for obtaining a purchase agreement, agree to pay to all eligible producers who deliver to them for processing sugar beets and sugarcane of average quality in the following locations, not less than:

(1) For sugar beets in the regions described in paragraph (d)(2) of this section, the following rates per net ton: Region 1, $23.06: *Provided,* That, if (i) the sugar extracted by a processor from 1980 crop sugar beets yields, on the average, less than 230.76 pounds per net ton of beets delivered and accepted by the processor or (ii) the processor's net return on by-products per net ton of beets delivered and accepted by the processor averages less than $6.26 per net ton, the required minimum price support rate per net ton of sugar beets may be adjusted. The adjusted rate will be determined by (A) multiplying $.1678 (the purchase agreement rate per pound less $.0092 considered as fixed marketing costs) times the average pounds and hundredths of pounds of sugar extracted per net ton, (B) adding thereto the net return to the processor on by-products per net ton of sugar beets delivered and accepted, and (C) multiplying the result times 53.1 percent.

Region 2, $25.09.
Region 3, $24.68.
Region 4, $25.00.
Region 5, $24.91.
Region 6, $24.76.
Region 7, $24.76.
Region 8, $26.17.

(2) For sugarcane in Florida, $20.65 per net ton;

(3) For sugarcane in Louisiana, $18.62 per net ton;

(4) For sugarcane in Texas, the amount determined by multiplying 8.624 cents times the average pounds of cane sugar, raw value, recovered per ton from the sugarcane delivered to the processor by all producers, as adjusted by the processor to reflect the quality of the juice (normal juice sucrose and normal juice purity) extracted from the individual producer's sugarcane.

(5) For sugarcane in Hawaii, the amount determined by multiplying the total pounds of cane sugar, raw value,

recovered per ton from the sugarcane delivered to the processor by the individual producer times (i) 9.4974 cents where the delivery point is at the mill, or (ii) 7.3389 cents where the cane is delivered by loading into trucks in the field; and

(6) For sugarcane in Puerto Rico, that price determined in accordance with the provisions of Puerto Rico Law No. 426—also known as the Puerto Rico sugar Law—and the rules issued thereunder by the Sugar Board of Puerto Rico: *Provided, however,* That the foregoing prices may be adjusted for sugar beets or sugarcane of nonaverage quality on the method agreed upon by the producer and processor.

§ 1435.81 Availability, disbursement, and maturity of purchase agreement.

(a) *Obtaining price support.* To obtain price aupport on eligible sugar, an eligible processor must file a request with the State committee of the State where he is headquartered and must execute a purchase agreement as prescribed by CCC. Such request must be filed no later than 90 calendar days after the processor completes processing the 1980 crop.

(b) *Maturity of purchase agreements.* (1) Purchase agreements will mature on the last day of the ninth calendar month following the month in which approved. (2) Whenever the maturity date falls on a weekend or Federal holiday, the date shall be extended to the next workday.

§ 1435.82 Quantity for purchase agreement.

Purchase agreements shall not be approved for more than the quantity which an eligible processor certifies is eligible and available. A processor's total purchase agreement quantity may not exceed his total eligible storage capacity less ineligible sugar in storage.

§ 1435.83 Delivery to CCC and settlement.

(a) The maximum quantity of sugar acceptable to CCC which a processor may deliver to CCC may be less than, but shall not exceed, that portion of the quantity approved on the purchase agreement which is in storage space acceptable to CCC.

(1) Sugar acceptable to CCC is limited to (i) refined beet or cane sugar which is dry and free flowing, without excessive sediment, and free of objectionable color, flavor and odor; (ii) raw cane sugar with acceptabale grain size which does not have excessive color or moisture; and (iii) sugarcane syrup or edible molasses which has acceptable color and flavor.

(2) Storage space acceptable to CCC is limited to that space which is determined by CCC between the time of receipt or processors notice of intent to deliver and the maturity date of the purchase agreement to be, under terms acceptable to CCC, both qualified and available for the storage of sugar owned by CCC.

(b) A processor who delivers to CCC shall give notice of intent to sell to CCC no later than 30 days prior to maturity of the purchase agreement. At that time, the processor shall furnish to CCC complete information as to the storage locations where delivery to CCC is proposed and, for each location, the quantity proposed for delivery to CCC. The processor shall also furnish such production records as CCC considers necessary to satisfy the quantity limitations of § 1435.80(a).

(c) After notification by CCC of the acceptable storage locations and quantities, but not later than the purchase agreement maturity date, the processor shall, for such portion of the quantity acceptable to CCC which the processor elects to deliver to CCC, provide CCC with warehouse receipts which transfer title for the delivered sugar to CCC.

(d) Disbursement for purchases will be made by sight drafts drawn on the account of CCC.

§ 1435.84 Processor storage agreement.

(a) The processor shall agree (1) to maintain sugar delivered to CCC in the eligible storage where delivered as long as deemed necessary by CCC, and (2) to remove and physically deliver loan collateral in accordance with written instructions from CCC.

(b) CCC shall make monthly storage payments to the processor for the time the processor stores the commodity for CCC after delivery. The storage payment rate shall not exceed $.000833 per pound, per month.

§ 1435.85 Miscellaneous provisions.

(a) *Subterfuge.* The processor shall not reduce returns to the producer below those determined in accordance with the requirements of this subpart through any subterfuge or device whatsoever.

(b) *Processor indebtedness.* The regulations issued by the Secretary governing setoffs and withholding, Part 13 of this title, shall be applicable to the program.

(c) *Liens.* Waivers of liens or encumbrances on the sugar delivered to CCC must be obtained which will fully protect the interest of CCC. A lienholder, in lieu of waiving a prior lien on sugar, may execute with CCC a Lienholder's Subordination Agreement (Form CCC-864) in which the Lienholder's security interest is subordinated to the rights of CCC.

(d) *Appeals.* A producer or processor may obtain reconsideration and review of determinations made under this subpart in accordance with the regulations in Part 780 of this title.

(e) *Records and inspection thereof.* ASCS shall reserve the right to have access to the premises of the processor, in order to inspect, examine, and make copies of the books, records, accounts, and other written data as are deemed necessary by ASCS to determine compliance with the requirements of this subpart. Such books, records, accounts and other written data shall be retained by the processor for not less than 3 years.

(f) *False certifications.* Any false certification, which is made for the purpose of enabling a processor to obtain a purchase agreement to which he is not entitled, will subject the person making such certification to liability under applicable Federal civil and criminal statutes.

(g) *Handling payments and collections not exceeding three dollars.* In order to avoid unreasonable administrative costs of making small payments and handling small accounts, amounts of $3 or less which are due the processor will be paid only upon his request. Deficiencies of $3 or less including interest, may be disregarded unless demand for payment is made by CCC.

(h) *Death, incompetency, or disappearance.* In case of death, incompetency, or disappearance of any processor who is entitled to the payment of any sum in settlement of a purchase payment shall, upon proper application to the State committee, be made to the persons who would be entitled to such processor's payment under the regulations contained in Part 707 of this title—Payment Due Persons Who Have Died, Disappeared, or Have Been Declared Incompetent.

§ 1435.86 Applicable forms.

The CCC forms for use in connection with this program will be made available by the State committee.

Signed at Washington, D.C. on August 11, 1980.

Dale E. Hathaway,

Under Secretary for International Affairs and Commodity Programs.

[FR Doc. 80-24580 Filed 8-14-80; 8:45 am]

BILLING CODE 3410-05-M

Rural Electrification Administration

7 CFR Part 1701

Proposed Revision of REA Bulletin 385-4, Form 397b, Design Specifications for Trunk Carrier Systems, and 397c, Design Specifications for Subscriber Carrier Systems

AGENCY: Rural Electrification Administration.

ACTION: Proposed rule.

SUMMARY: REA proposes to issue revised Bulletin 385-4, Forms 397b and c. This revision will update documents which are nine and seven years old, respectively, to reflect advances in technology thus permitting REA borrowers to provide the best, most cost-effective service possible.

DATE: Public comments must be received by REA no later than October 14, 1980.

ADDRESS: Submit written comments to Joseph M. Flanigan, Director, Telecommunications Engineering and Standards Division, Rural Electrification Administration, Room 1355, South Building, U.S. Department of Agriculture, Washington, D.C. 20250.

FOR FURTHER INFORMATION CONTACT: C. F. Buster, Jr., Chief, Transmission Branch, Telecommunications Engineering and Standards Division, Rural Electrification Administration, Room 1367, South Building, U.S. Department of Agriculture, Washington, D.C. 20250, telephone (202) 447-3917. The Draft Impact Analyses describing the options considered in developing this proposed rule and the impact of implementing each option is available from the above office.

SUPPLEMENTARY INFORMATION: Pursuant to the Rural Electrification Act, as amended (7 U.S.C. 901 et. seq.), REA proposed to revise REA Forms 397b and c, Design Specifications for Trunk and Subscriber Carrier Systems. This proposed action has been reviewed under USDA procedures established in Secretary's Memorandum No. 1955 to implement Executive Order No. 12044, and has been classified not significant.

REA, in an effort to aid REA borrowers in providing the best, most cost-effective telecommunications service to rural America is revising REA Forms 397b and c to reflect advances in technology.

Copies of the draft bulletin are available from the address indicated above. All written submissions made pursuant to this action will be made available for public inspection during regular business hours, above address.

Dated: August 7, 1980.

John H. Arnesen,

Assistant Administrator-Telephone.

[FR Doc. 80-24841 Filed 8-14-80; 8:45 am]

BILLING CODE 3410-15-M

DEPARTMENT OF ENERGY

Federal Energy Regulatory Commission

18 CFR Parts 2 and 154

[Docket No. RM78-4]

Compensation Provisions for Curtailment Plans; Notice of withdrawal of a proposed rulemaking and termination of a Docket

Issued August 7, 1980.

AGENCY: Federal Energy Regulatory Commission.

ACTION: Notice of Withdrawal of a Proposed Rulemaking and Termination of Docket No. RM78-4.

SUMMARY: The Federal Energy Regulatory Commission (Commission) hereby gives notice that the proposed rulemaking in Docket No. RM78-4 has been terminated. In Docket No. RM78-4, the Commission issued on November 30, 1977 (42 FR 62018, Dec. 8, 1977) a Notice of Proposed Rulemaking entitled "Proposal by the Federal Energy Regulatory Commission Relating to the Incorporation of Compensation Provisions in Curtailment Plans." On August 4, 1980, the Commission acted in several individual curtailment cases involving the compensation issue thereby making continuation of the rulemaking in Docket No. RM78-4 unnecessary.

EFFECTIVE DATE: August 4, 1980.

FOR FURTHER INFORMATION CONTACT: Auburn L. Mitchell, Office of Opinions and Review, Federal Energy Regulatory Commission, 825 North Capitol Street, N.E., Washington, D.C. 20426, (202) 357-8283.

Kenneth F. Plumb,

Secretary.

[FR Doc. 80-24758 Filed 8-14-80; 8:45 am]

BILLING CODE 6450-85-M

DEPARTMENT OF HEALTH AND HUMAN SERVICES

Food and Drug Administration

21 CFR Part 310

[Docket No. 79N-0176]

Stomach Acidifier Drug Products for Over-the Counter Use; Notice of Proposed Rulemaking; Correction

AGENCY: Food and Drug Administration.

ACTION: Proposed rule; correction.

SUMMARY: In FR Doc. 79-32107 appearing at page 60316 in the Federal Register of Friday, October 19, 1979 (44 FR 60316), the following correction is made: On page 60319, in the third column, in the seventh line of § 310.540(c), "presented" should read "represented."

FOR FURTHER INFORMATION CONTACT: Agnes Black, Federal Register Writer (HFC-11), Food and Drug Administration, 5600 Fishers Lane, Rockville, MD 20857, 301-443-2994.

Dated: August 6, 1980.

William F. Randolph,

Acting Associate Commissioner for Regulatory Affairs.

[FR Doc. 80-24384 Filed 8-14-80; 8:45 am]

BILLING CODE 4110-03-M

21 CFR Part 346

[Docket No. 80N-0050]

Anorectoral Drug Products for Over-the-Counter Human Use; Establishment of a Monograph

Correction

In FR Doc. 80-15334, appearing at page 35576 in the issue for Tuesday, May 27, 1980, make the following correction:

On page 35677, in the middle column, in the next to last paragraph, in the seventh line, the comments deadline is incorrectly printed as "August 18, 1980". The correct comments closing date is "August 25, 1980".

BILLING CODE 1505-01-M

DEPARTMENT OF LABOR

Occupational Safety and Health Administration

29 CFR Part 1960

[Docket No. F-002]

Basic Program Elements for Federal Employee Occupational Safety and Health Programs

AGENCY: Occupational Safety and Health Administration, Labor.

ACTION: Proposed rulemaking.

SUMMARY: Executive Order 12196, issued to provide direction for the implementation of Section 19 of the Occupational Safety and Health Act of 1970 (29 U.S.C. § 668), directs the Secretary of Labor to issue a set of basic program elements to assist the various Federal agencies in carrying out their responsibilities under the Act. In order to provide occupational safety and health protection for Federal employees, Section 19 imposes on the head of each Federal agency the responsibility to "establish and maintain an effective and comprehensive occupational safety and health program which is consistent with the standards promulgated under Section 6." This document proposes to revise 29 CFR Part 1960 to reflect the requirement of E.O. 12196 and to carry out the Secretary's responsibilities under Sections 19 and 24 of the Act.

DATES: Comments should be submitted on or before September 15, 1980.

ADDRESS: Comments should be sent to: Docket Officer, Docket No. F-002, Room S-6212, U.S. Department of Labor, Washington, D.C. 20210.

FOR FURTHER INFORMATION CONTACT: Mr. Robert Broderick, OSHA, U.S. Department of Labor, Washington, D.C. 20210. Telephone: (202) 376-3005

SUPPLEMENTARY INFORMATION: On March 12, 1980, a draft revision of Part 1960 was submitted to a task group of the Federal Advisory Council on Occupational Safety and Health (FACOSH) for consideration. On March 21 and March 28, 1980, the draft proposal of Part 1960 was submitted by the task group to all members of FACOSH for consideration and advice. This proposal was prepared after the Agency's full consideration of the views and advice of FACOSH. On May 21, 1980, in accordance with Section 1-401(c) of E.O. 12196, the Secretary of Labor submitted this proposed revision to the Office of Management and Budget (OMB). OMB, on June 17, 1980, distributed the proposal to selected agencies for comment. By this publication, OSHA is soliciting comments from interested persons. Comments received pursuant to this publication may be reviewed at the Docket Office, Room S-6212, U.S. Department of Labor, Washington, D.C. 20210.

Public Participation: Interested persons are hereby given until September 15, 1980, to submit comments, views and arguments. These comments are to be submitted to the Docket Officer, Docket No. F-002, Room S-6212 U.S. Department of Labor, Washington, D.C. 20210. Although the public participation and comment requirements of both the Administrative Procedure Act (5 U.S.C. 553(a)(2)) and Executive Order 12044, (Improving Government Regulations) do not apply to this proposal because this document deals with matters related to agency management or personnel, OSHA is nevertheless publishing this proposed rule in order to solicit the widest possible comment from interested persons. However, in order to issue the final rule as early as possible before the October 1, 1980, effective date of E.O. 12196, a 30-day public comment period as provided in the Administrative Procedure Act is being allowed instead of the 60-day comment period provided in E.O. 12044.

Authority: This document was prepared under the direction of Eula Bingham, Assistant Secretary of Labor for Occupational Safety and Health, U.S. Department of Labor, Third and Constitution Avenue, N.W., Washington, D.C. 20210. Accordingly, pursuant to Sections 19 and 24 of the Occupational Safety and Health Act of 1970 (84 Stat. 1609, 1614, 29 U.S.C. 668, 673), Secretary of Labor's Order No. 8-76 (41 FR 25059), and Executive Order 12196, it is proposed to delete 29 CFR Part 1960 and substitute in lieu thereof the following.

Signed at Washington, D.C., this 11th day of August, 1980.

Eula Bingham,

Assistant Secretary of Labor.

PART 1960—BASIC PROGRAM ELEMENTS FOR FEDERAL EMPLOYEE OCCUPATIONAL SAFETY AND HEALTH PROGRAMS AND RELATED MATTERS

Subpart A—General

1960.1 Purpose and scope.
1960.2 Definitions.
1960.3-.5 [Reserved]

Subpart B—Administration

1960.6 Designation of agency safety and health officials.
1960.7 Financial management.
1960.8 Agency responsibilities.
1960.9 Supervisory responsibilities.
1960.10 Employee responsibilities and rights.
1960.11 Evaluation of occupational safety and health performance.
1960.12 Dissemination of occupational safety and health program information.
1960.13-.15 [Reserved]

Subpart C—Standards

1960.16 Compliance with OSHA standards.
1960.17 Alternate standards.
1960.18 Supplementary standards.
1960.19 Emergency standards.
1960.20 Conflicting standards.
1960.21-.24 [Reserved]

Subpart D—Inspection and Abatement

1960.25 Qualifications of safety and health inspectors and agency inspections.
1960.26 Conduct of inspections.
1960.27 Representatives of officials in charge and representatives of employees.
1960.28 Reports of unsafe or unhealthful working conditions.
1960.29 Accident investigation.
1960.30 Abatement of unsafe or unhealthful working conditions.
1960.31 Inspections by OSHA.
1960.32-.33 [Reserved]

Subpart E—General Services Administration and Other Federal Agencies

1960.34 General provisions.
1960.35 [Reserved]

Subpart F—Occupational Safety and Health Committees

1960.36 General provisions.
1960.37 Committee organization.
1960.38 Committee certification.
1960.39 Agency responsibilities.
1960.40 Establishment committee duties (responsibilities).
1960.41 National committee duties (responsibilities).
1960.42-.45 [Reserved]

Subpart G—Allegations of Discrimination

1960.46 Agency responsibility.
1960.47 Employee reports of discrimination.
1960.48 Investigation procedures.
1960.49-.53 [Reserved]

Subpart H—Training

1960.54 Training of top management officials.
1960.55 Training of supervisors.
1960.56 Training of safety and health specialists.
1960.57 Training of safety and health inspectors.
1960.58 Training of collateral duty safety and health personnel.
1960.59 Training of occupational safety and health committee members.
1960.60 Training of employees and employee representatives.
1960.61 Training assistance.
1960.62-.65 [Reserved]

Subpart I—Recordkeeping and Reporting Requirements

1960.66 Purpose, scope and general provisions.
1960.67 Record of log of federal occupational injuries and illnesses.
1960.68 Supplementary record of federal occupational injuries and illnesses.
1960.69 Annual summaries of federal occupational injuries and illnesses.
1960.70 Annual summaries of federal occupational property damage incidents.

1960.71 Reporting of serious incidents.
1960.72 Location and utilization of records and reports.
1960.73 Access to records by Secretary.
1960.74 Retention of records.
1960.75 Identification of reporting units.
1960.76 Agency annual reports.
1960.77 [Reserved]

Subpart J—Evaluation of Federal Occupational Safety and Health Programs

1960.78 Purpose of scope.
1960.79 Self-evaluations of occupational safety and health programs.
1960.80 Secretary evaluations of agency occupational safety and health programs.
1960.81–.83 [Reserved]

Subpart K—Field Federal Safety and Health Councils

1960.84 Purpose.
1960.85 Role of the Secretary.
1960.86 Establishing councils.
1960.87 Objectives.
1960.88 Membership.
1960.89 Organization.
1960.90 Participation.
1960.91 Operating procedures.
1960.92–.99 [Reserved]

Authority: Secs. 19 and 24 of the Occupational Safety and Health Act of 1970 (84 Stat. 1609, 1614, 29 U.S.C. 668, 673); Secretary of Labor's Order No. 8–76 (41 FR 25059); E.O. 12196.

Subpart A—General

§ 1960.1 Purpose and scope.

(a) Section 19 of the Occupational Safety and Health Act (the Act) contains special provisions to assure safe and healthful working conditions for Federal employees. Under that section, it is the responsibility of the head of each Federal agency to establish and maintain an effective and comprehensive occupational safety and health program which is consistent with the standards promulgated under section 6 of the Act. The Secretary of Labor (the Secretary), under section 19, is to report to the President certain evaluations and recommendations with respect to the programs of the various agencies; and under section 24 of the Act, is to develop and maintain an effective program of collection, compilation and analysis of occupational safety and health statistics. The role of the General Services Administration in this area stems from its duties as the Government's principal landlord and from its specific safety and health responsibilities under 41 CFR Part 101, Subchapter D, Federal Property Management Regulations.

(b) Executive Order 12196, Occupational Safety and Health Programs for Federal Employees, issued February 26, 1980 prescribes additional responsibilities for the heads of agencies, the Secretary, and the General Services Administration. Among other duties, the Secretary is required to issue basic program elements with which the heads of agencies are to comply in operating their safety and health programs. The purpose of this part is to issue these basic program elements. The basic program elements are designed to ensure that agency heads retain the flexibility necessary to implement their programs in a manner consistent with their respective missions, sizes, and organizations. Upon the request of an agency head, and after consultation with the Federal Advisory Council on Occupational Safety and Health (FACOSH), the Secretary may approve alternate program elements.

(c) Under Executive Order 12196, the Secretary is required to perform various services for the agencies, including consultation, training, recordkeeping, inspections, and evaluations. Agencies are encouraged to seek such assistance from the Secretary as well as advice on how to comply with the basic program elements and operate effective occupational safety and health programs. Upon the request of an agency, the Office of Federal Agency Safety and Health Programs will review proposed agency plans for the implementation of program elements.

(d) Section 19 of the Act and the Executive Order require specific opportunities for employee participation in the operation of agency safety and health programs. The manner of fulfilling these requirements is set forth in part in these program elements. These requirements are separate from but consistent with Federal Service Labor Management Relations Statute (5 U.S.C. 71) and regulations dealing with labor-management relations within the Federal Government.

(e) Executive Order 12196 and these basic program elements apply to all agencies of the Executive Branch. They apply to all employees except military personnel. They apply to all working conditions except those involving uniquely military equipment, systems, and operations.

(f) Protection of employees of private contractors is assured under the other provisions of the Act, not under Section 19. No provisions of the Executive Order or of this part shall be construed in any manner to relieve Federal contractors or their employees of any rights or responsibilities under the provisions of the Act, including compliance activities conducted by the Department of Labor or other appropriate authority.

(g) Federal employees who work in establishments of private employers are covered by their agencies' occupational safety and health programs. Although an agency may not have the authority to require abatement of hazardous conditions in a private sector workplace, the agency head must assure safe and healthful working conditions for his/her employees. This shall be accomplished by administrative controls, personal protective equipment, or withdrawal of Federal employees from the private sector facility to the extent necessary to assure that the employees are protected.

§ 1960.2 Definitions.

(a) The term "Act" means the Occupational Safety and Health Act of 1970 (84 Stat. 1590 et seq., 29 U.S.C. 651 et seq.).

(b) The term "agency" for the purposes of this part means an Executive Department, as defined in 5 U.S.C. 101, or any employing unit or authority of the Executive Branch of the Government. By agreement between the Secretary of Labor and the head of an agency of the Legislative or Judicial Branches of the Government, these regulations may be applicable to such agencies.

(c) The term "agency liaison" means an agency person appointed with full authority and responsibility to represent the occupant agency management with the official in charge of a facility or installation such as a GSA Building Manager. This liaison is the agency person who has authority to obligate agency funds for correction of conditions.

(d) The term "building manager" means the person who manages one or several buildings under the authority of Federal agency. For example, a building manager may be the GSA person who manages building(s) for GSA.

(e) As used in Executive Order 12196, the term "consultation with representatives of the employees thereof" shall include such consultation, conference, or negotiation with representatives of agency employees as is consistent with the Federal Service Labor Management Relations Statute (5 U.S.C. 71), or other collective bargaining arrangement. As used in this part, the term "representative of employees" shall be interpreted with due regard for any obligation imposed by the aforementioned statute and any other collective bargaining arrangement that may cover the employees involved.

(f) The term "Designated Agency Safety and Health Official" means the individual who is responsible for the management of the safety and health program within an agency, and is so designated or appointed by the head of the agency pursuant to § 1960.6 and the provisions of Executive Order 12196.

(g) The term "employee" as used in this part means any person employed or otherwise suffered, permitted, or required to work by an "agency" as the latter term is defined in paragraph (b) of this section.

(h) The term "establishment" means a single physical location where business is conducted or where services or operations are performed. Where distinctly separate activities are performed at a single physical location, each activity shall be treated as a separate "establishment." Typically, an "establishment" as used in this part is referred to as a field activity, regional office, area office, installation, or facility.

(i) The term "uniquely military equipment, systems, and operations" is interpreted as *excluding* from the scope of the order the *design* of Department of Defense equipment and systems that are unique to the national defense mission, such as military aircraft, ships, submarines, missiles, and missile sites, early warning systems, military space systems, artillery, tanks, and tactical vehicles; and *operations* that are uniquely military such as field maneuvers, naval operations, military flight operations, associated research test and development activities, and actions required under emergency conditions as declared by the President or Secretary of Defense with notification to the Secretary of Labor. The term, as interpreted, does not exclude from the scope of the Order, Department of Defense workplaces and operations comparable to those of industry in the private sector such as: vessel, aircraft, and vehicle repair, overhaul, and modification (except for equipment trials); construction; supply sevices; civil engineering or public works; medical services; and office work.

(j) The term "incidence rates" means the number of injuries and illnesses, or lost workdays, per 100 full-time workers. Rates are calculated as

$$\frac{N \times 200{,}000}{EH}$$

N=number of injuries and illnesses, or number of lost workdays.

EH=total hours worked by all employees during a month, a quarter, or a calendar year.

200,000=base for 100 full-time equivalent workers (working 40 hours per week, 50 weeks per year).

(k) The term "inspection" means a comprehensive survey of a workplace in order to detect safety and health hazards, performed during the regular work hours of the agency, except as special circumstances may require.

(l) The term "lost workday cases" means injuries and illnesses which involve days away from work and/or days of restricted work activity. "Lost workdays—away from work" means the number of workdays (consecutive or not) on which the employee would have worked but could not because of an occupational injury or illness. "Lost workdays—restricted work activity" means the number of workdays (consecutive or not) on which, because of injury or illness:

(1) The employee was assigned to another job on a temporary basis;

(2) The employee worked at a permanent job less than full time, or

(3) The employee worked at a permanently assigned job but could not perform all duties normally connected with the job.

(m) The term "representative of management" means a supervisor or management official as defined in the applicable labor-management relations program covering the affected employees.

(n) The term "medical treatment" includes treatment administered by a physician, or by registered professional personnel under standing orders of a physician, for an occupational injury or illness which does not result in days away from work or days of restricted work activity. "Medical treatment" does not include first aid treatment, even though provided by a physician or registered professional personnel. For further details and specific examples of what is considered first aid treatment versus medical treatment, see OSHA 2014, Recordkeeping and Reporting Guidelines for Federal Agencies.

(o) The term "recordable occupational injuries or illnesses" means any occupational injuries or illnesses which result in:

(1) Occupation-related deaths regardless of the time between injury and death, or the length of illness;

(2) Nonfatal occupational illnesses, or

(3) Nonfatal occupational injuries which involve one or more of the following: days away from work or days of restricted work activity; loss of consciousness; restriction of work or motion; transfer to another job; or medical treatment (other than first aid).

(p) The term "reporting unit" means an establishment, except as otherwise agreed between the agency and the Office of Federal Agency Safety and Health Programs, U.S. Department of Labor, as provided in section 1960.75.

(q) The term "Safety and Health Inspector" means a safety and health specialist or other person authorized pursuant to Executive Order 12196, section 1-201(g), to carry out inspections for the purpose of Subpart D of this part, a person having equipment and competence to recognize safety and/or health hazards in the workplace.

(r) The term "Safety and Health Official" means an individual who manages the safety and health program at organizational levels below the Designated Agency Safety and Health Official.

(s) The term "Safety and Health Specialist" means a person or persons meeting the Office of Personnel Management standards for such occupations as Safety Manager/Specialist GS-018, Safety Engineer GS-803, Fire Protection Engineer GS-804, Industrial Hygienist GS-690, Fire Protection Specialist/Marshal GS-081, Health Physicist GS-1306, or equally qualified military, agency, or nongovernment personnel. The agency head shall be responsible for determination and certification of equally qualified personnel.

(t) The term "workplace" means the the individual and actual physical location where the agency's work or operations are performed.

§§ 1960.3-1960.5 [Reserved]

Subpart B—Administration

§ 1960.6 Designation of agency safety and health officials.

(a) The head of each agency shall designate an official with sufficient authority and responsibility to represent effectively the interest and support of the agency head in the management and administration of the agency occupational safety and health program. This Designated Agency Safety and Health Official shall be of the rank of Assistant Secretary, or of equivalent rank. There shall be sufficient headquarters staff, with the necessary training and experience, reporting directly to the Designated Agency Safety and health Official, to carry out the responsibilities under this part.

(b) The Designated Agency Safety and Health Official shall assist the agency head in establishing:

(1) An agency occupational safety and health policy and program to carry out the provisions of section 19 of the Act, Executive Order 12196, and this part;

(2) An organization, including provision for the designation of safety and health officials at appropriate levels, with an adequate budget and staff to implement the occupational safety and health program at all operational levels;

(3) A set of procedures that ensures effective implementation of the agency policy and program as required by section 19 of the Act, Executive Order 12196, and the program elements of this part, considering the mission, size, and organization of the agency;

(4) Goals and objectives for reducing and eliminating occupational accidents, injuries, and illnesses;

(5) Plans and procedures for evaluating the agency's occupational safety and health program effectiveness at all operational levels, and

(6) Priorities with respect to the factors which cause occupational accidents, injuries, and illnesses in the agency's workplaces so that appropriate corrective actions can be taken.

(c) The Designated Agency Safety and Health Official shall assure that safety and health officials are designated at each appropriate level with sufficient authority and responsibility to plan for and provide funds for necessary safety and health staff, equipment, materials, and training required to ensure implementation of an effective occupational safety and health program.

§ 1960.7 Financial management.

(a) The head of each agency shall ensure that the agency budget submission includes appropriate financial resources to effectively implement and administer the agency occupational safety and health program.

(b) The Designated Agency Safety and Health Official, management officials in charge of each establishment, safety and health officials at all appropriate levels, and other management officials shall be responsible for planning, requesting resources, implementing, and evaluating the occupational safety and health program budget in accordance with the regulations of the Office of Management and Budget Circular A-11 (§§ 13.2(f) and 13.5(f)) and other relevant documents such as OMB Bulletin 79-14.

(c) Occupational safety and health program budgets *shall* include funding for:

(1) Sufficient personnel to implement and administer the program at all levels, including necessary administrative costs such as training, travel, and personal protective equipment;

(2) Abatement of unsafe or unhealthful working conditions related to agency operations or facilities;

(3) Safety and health sampling, testing, and diagnostic and analytical tools and equipment, including laboratory analyses;

(4) Any necessary contracts to identify, analyze, or evaluate unsafe or unhealthful working conditions and operations;

(5) Program promotional cost such as publications, posters, or films;

(6) Technical information, documents, books, standards, codes, periodicals, and publications, and

(7) Medical surveillance programs for employees.

§ 1960.8 Agency responsibilities.

(a) The head of each agency shall furnish to each employee employment and a place of employment which are free from recognized hazards that are causing or are likely to cause death or serious physical harm.

(b) The head of each agency shall comply with the Occupational Safety and Health Administration standards applicable to the agency and with all related rules, regulations, and orders issued by the Secretary of Labor.

(c) The head of each agency shall develop, implement, and evaluate an occupational safety and health program in accordance with the requirements of section 19 of the Act, Executive Order 12196, and the basic program elements prescribed in this part.

(d) The head of each agency shall acquire, maintain, and require the use of approved personal protective equipment, approved safety equipment, and other devices necessary to protect employees.

§ 1960.9 Supervisory responsibilities.

Employees who exercise supervisory functions shall, to the extent of their authority, furnish employees employment free from recognized hazards that are causing or are likely to cause death or serious physical harm. They shall also comply with the occupational safety and health standards applicable to their agency and with all rules, regulations, and orders issued by the head of the agency with respect to the agency occupational safety and health program.

§ 1960.10 Employee responsibilities and rights.

(a) Each employee shall comply with the standards, rules, regulations, and orders issued by his/her agency in accordance with section 19 of the Act, Executive Order 12196, and this part which are applicable to his/her own actions and conduct.

(b) Employees shall use safety equipment, personal protective equipment, and other devices provided by the agency and necessary for their protection.

(c) Employees shall have the right to report unsafe and unhealthful working conditions to appropriate officials.

(d) Employees shall be authorized official time to participate in the activities provided for in section 19 of the Act, Executive Order 12196, this part, and the agency occupational safety and health program.

§ 1960.11 Evaluation of occupational safety and health performance.

Each agency head shall ensure that any performance evaluation of a management officical in charge of an establishment, a supervisory employee, or other management official, measures that employee's performance in meeting requirements of the agency occupational safety and health program, taking into consideration any applicable rules of the Office of Personnel Management or other appropriate authority. The recognition of superior performance in discharging safety and health responsibilities by an individual or group should be encouraged and noted.

§ 1960.12 Dissemination of occupational safety and health program information.

(a) Copies of the Act, Executive Order 12196, program elements published in this part, details of the agency's occupational safety and health program, and applicable safety and health standards shall be made available upon request to employees or employee representatives for review.

(b) A copy of the agency's written occupational safety and health program shall be made available to each supervisor and to employee representatives.

(c) Each agency shall post and keep posted a notice or notices informing employees of the provisions of the Act, Executive Order 12196, and the agency occupational safety and health program under this part. The Department of Labor will furnish a uniform poster to agencies. Each agency shall add to this uniform poster, or include in its notice or notices, the following items: (1) details of the agency's procedures for reports by employees of unsafe or unhealthful working conditions, and allegations of discrimination or reprisal due to participation in safety and/or health activities; (2) the location where employees may obtain information about the agency's occupational safety and health program, including specific agency occupational safety and health standards, and (3) relevant information about any agency safety and health committees. Such notice or notices shall

be posted by the agency in each establishment in a conspicuous place or places where notices to employees are customarily posted. Such notices shall not be altered, deface, or covered by other material, and shall be kept up to date. Agencies may also convey the information required by this paragraph to employees by other means, provided that such dissemination is in accordance with this paragraph.

(d) Agency heads shall promote employee awareness of occupational safety and health matters through their ordinary information channels, such as newsletters, bulletins and handbooks.

§§ 1960.13-1960.15 [Reserved]

Subpart C—Standards

§ 1960.16 Compliance with OSHA standards.

Each agency shall comply with all occupational safety and health standards issued under section 6 of the Act, or with alternate standards issued pursuant to this subpart.

§ 1960.17 Alternate standards.

An agency head may determine it necessary to apply an alternate standard, and shall, after consultation with employees or their representatives, and/or with appropriate occupational safety and health committees, notify the secretary and request approval of such alternate standards.

(a) Any request for an alternate standard shall be transmitted to the Secretary by the head of the agency.

(b) Any such request for an alternate standard shall not be approved by the Secretary unless it provides equivalent or greater protection for affected employees. Any such request shall include:

(1) A statement of why the agency cannot comply with the OSHA standard or wants to adopt an alternate standard;

(2) A description of the alternate standard;

(3) A demonstration that the alternate standard provides equivalent or greater protection for the affected employees;

(4) A description of interim protective measures afforded employees until a decision is rendered by OSHA, and

(5) A summary of written comments, if any, from interested employees, employee representatives, and occupational safety and health committees, where established.

§ 1960.18 Supplementary standards.

(a) An agency head shall adopt such supplementary standards as necessary and appropriate for application to working conditions of agency employees for which there exist no appropriate OSHA standards. The agency head shall notify the Secretary of the subject matter of such standard when the development of the standard begins.

(b) The agency head shall notify the Secretary of adoption of a supplementary standard and transmit a copy of any supplementary standard adopted, where OSHA has not issued an applicable standard under section 6 of the Act.

(c) Upon request of the Secretary, the agency head shall make available to the Secretary any written comments on the supplementary standard from interested employees, employee representatives, and occupational safety and health committees, as well as other background material.

§ 1960.19 Emergency standards.

(a) In addition to emergency temporary standards issued under section 6 of the Act, an agency head shall adopt or develop any other emergency temporary occupational safety and health standards when such action is deemed necessary to protect employees from grave dangers. The authorized representatives of the employees, the occupational safety and health committee (where established), and the Office of Federal Agency Safety and Health Programs shall be informed of such action.

(b) The head of each agency shall initiate appropriate procedures under § 1960.17, or § 1960.18 to convert any emergency temporary standard to a standard which provides permanent protection for the employees.

§ 1960.20 Conflicting standards.

(a) Where employees of different agencies engage in joint operations, and/or primarily report to work or carry out operations in the same establishment, the standards adopted under §§ 1960.17, 1960.18, or 1960.19 of the host agency shall govern.

(b) There may be situations where the head of an agency is additionally required to comply with standards issued by a Federal authority other than OSHA. Such standards may conflict with the agency occupational safety and health standards applicable under this subpart. For example, standards issued by the General Services Administration pertaining to space for which it has assigned responsibility, pursuant to its statutory authority to conserve and protect such property, may create a conflict with the standards adopted pursuant to this part. (GSA standards pertain to certain aspects of fire safety and sanitation, as well as levels of illumination, security, heating, cooling, and gas consumption for government vehicles.) In cases where such conflicts occur, the head of the agency shall inform the other Federal authority and the Secretary of Labor, so that joint efforts to resolve the issues may be undertaken.

§§ 1960.21-1960.24 [Reserved]

Subpart D—Inspection and Abatement

§ 1960.25 Qualifications of safety and health inspectors and agency inspections.

(a) Executive Order 12196 requires that each agency utilize as inspectors "personnel with equipment and competence to recognize hazards." Inspections shall be conducted by inspectors qualified to recognize, evaluate, and to recommend abatement techniques for hazards of the working environment to which assigned. Safety and health specialists as defined in § 1960.2(s), with experience and/or up-to-date training in occupational safety and health hazard recognition, evaluation, and abatement techniques, are considered as meeting the qualifications of safety and health inspectors. For those working environments where there are less complex hazards, such safety and health specializations as cited above may not be required, but inspectors in such environments shall have sufficient documented training and/or experience in the safety and health hazards of the workplace involved to recognize, evaluate, and recommend abatement techniques for those particular hazards. All inspector personnel must be provided the equipment necessary to conduct a thorough inspection of the workplace involved.

(b) Agency heads shall authorize safety and health inspection personnel, and labor organization and/or safety and health committee members who possess essential expertise, to aid them in evaluating the safety and health aspects of working conditions while conducting an inspection.

(c) Each agency which has workplaces containing information classified in the interest of national security shall provide access to safety and health inspectors who have obtained the appropriate security clearance.

(d) All areas and operations of each workplace, including office operations, shall be inspected at least annually. Additional announced and unannounced inspections shall be conducted at all workplaces where there is an increased risk of accident, injury, or illness due to the nature of the work performed. Sufficient unannounced inspections shall be conducted by the

agency to ensure identification and abatement of hazardous conditions.

(e) When situations arise involving multiple agencies' responsibilities for conditions affecting employee safety and health, coordination of inspection functions is encouraged.

(f) Inspections which meet the requirements of this subpart may be conducted by nonagency personnel having the appropriate test equipment and the required degree of competence, when the Designated Agency Safety and Health Official or designee deems it appropriate to employ such personnel from other Federal agencies or through an appropriate contracting procedure.

§ 1960.26 Conduct of inspections.

(a) *Preparation.* (1) Prior to commencement of the inspection, the Safety and Health Inspector shall review all available relevant information which pertains to the workplace to be inspected, including complaints, injury and illness records, previous inspection reports, and reports of unsafe and unhealthful working conditions.

(2) The Safety and Health Inspector shall determine in advance, where possible, the actual work procedures and conditions to be inspected, in order to have the proper equipment available to conduct an effective inspection.

(b) *Inspection.* (1) For the purpose of assuring safe and healthful working conditions for employees of agencies, the head of the agency or Designated Agency Safety and Health Official shall authorize safety and health inspectors: to enter without delay, and at reasonable times, any building, installation, facility, construction site, or other area, workplace, or environment where work is performed by employees of the agency; to inspect and investigate during regular working hours and at other reasonable times, and within reasonable limits and in a reasonable manner, any such place of employment and all pertinent conditions, structures, machines, apparatus, devices, equipment, and materials therein, and to question privately any agency employee, and/or any agency supervisory employee, and/or any official in charge of an establishment.

(2) The Safety and Health Inspector shall, at the beginning of the inspection, contact the management official in charge of the workplace, inform that official of the inspection procedures, and invite the official or the representative thereof to witness the inspection.

(3) The inspector shall meet the employee representatives involved, inform them of inspection procedures, and invite them to accompany the inspector. If there are no authorized representatives of employees, the inspector shall consult with a reasonable number of employees during the walkaround.

(4) The inspector shall limit the inspection party to a size which will not disrupt either the inspection or the operations of the workplace.

(5) When hazards are observed, they shall be sufficiently documented regarding type of hazard and location. Documentation may include photographs, measurements, diagrams, interviews with employees, and personal and/or environmental air samples.

(6) When, in the opinion of the inspector, it is necessary to conduct personal monitoring (sampling) of employees' work environments, the inspector shall have the authority to place reasonable and necessary personal monitoring devices, e.g., noise dosimeters and air sampling pumps, upon the person of employees for periods determined by the inspector to be necessary for complete and effective sampling of the environment.

(7) Upon request of the inspector, the employer shall require employees to wear personal environmental monitoring devices for relevant sampling procedures during the inspection.

(8) Whenever and as soon as it is concluded on the basis of an inspection that a danger exists which could reasonably be expected to cause death or serious physical harm immediately, the inspector shall inform the affected employees and official in charge of the workplace of the danger. The official in charge of the workplace, or a person empowered to act for that official, shall undertake immediate abatement and the withdrawal of employees not necessary for abatement of the dangerous conditions. In the event the official in charge of the workplace needs assistance to undertake full abatement, that official shall promptly contact the Designated Agency Safety and Health Official and other responsible agency officials, who shall assist the abatement effort. Safety and health committees shall be informed of all relevant actions, as shall representatives of the employees.

(c) *Closing Conference.* At the conclusion of an inspection, the Safety and Health Inspector shall confer with the official in charge of the workplace or that official's representative, and with an appropriate representative of the employees of the establishment, and informally advise them of any apparent unsafe or unhealthful working conditions disclosed by the inspection. During such conference, the official in charge of the workplace and the employee representative shall be afforded an opportunity to bring to the attention of the Safety and Health Inspector any pertinent information regarding conditions in the workplace.

(d) *Written reports and notices of unsafe or unhealthful working conditions.* (1) The inspector shall, in writing, describe with particularity the procedures followed in the inspection and the findings which form the basis for the issuance of any Notice of Unsafe or Unhealthful Working Conditions.

(2) Each agency shall establish a procedure for the prompt issuance of a Notice of Unsafe or Unhealthful Working Conditions. Such notices shall be issued not later than 30 days after completion of the inspection. If such notice cannot be issued within 30 days, the officials noted (see 3 below) shall be notified of the reasons for the delay. Such procedure shall include the following: (i) notices shall be in writing and shall describe with particularity the nature of the unsafe or unhealthful working condition, including a reference to the standard or other standard or other requirement involved; (ii) the notice shall fix a reasonable time for the abatement of the unsafe or unhealthful working condition, and (iii) a copy of the notice shall be sent to the official in charge of the workplace, the employee representative who participated in the closing conference, and/or the safety and health committee of the workplace, if any.

(3) Upon receipt of any notice of an unsafe or unhealthful working condition, the official in charge of a workplace shall immediately post such notice, or copy thereof, unedited, except for reason of national security, at or near each place an unsafe or unhealthful working condition referred to in the notice exists or existed. In addition, a notice shall be posted if any special procedures are in effect. Where, because of the nature of the workplace operations, it is not practicable to post the notice at or near each such place, such notice shall be posted, unedited, except for reason of national security, in a prominent place where it will be readily observable by all affected employees. For example, where workplace activities are physically dispersed, the notice may be posted at the location to which employees report each day. Where employees do not primarily work at or report to a single location, the notice may be posted at the location from which the employees operate to carry out their activities. The official in charge of a workplace shall take steps to ensure that the notice is

not altered, defaced, or covered by other material.

(4) Each notice of an unsafe or unhealthful working condition, or a copy thereof, shall remain posted until the unsafe or unhealthful working condition has been abated, or for three working days, whichever is later. A copy of the notice will be permanently filed at the establishment and made available to the Secretary upon request.

§ 1960.27 Representatives of officials in charge and representatives of employees.

(a) Safety and health inspectors shall be in charge of inspections and may interview any employee in private if the inspector deems it necessary. A representative of the official in charge of a workplace and a representative of employees shall accompany the Safety and Health Inspector during the physical inspection of any workplace, both to aid the inspection and to provide such representatives with more detailed knowledge of any existing or potential unsafe or unhealthful working conditions. Additional representatives of the official in charge and additional representatives of employees may accompany the Safety and Health Inspector if it is determined that such additional representatives will further aid the inspection. A different representative of the agency official in charge and a different representative of employees may be allowed to accompany the Safety and Health Inspector during each different phase of an inspection. Members of the certified safety and health committee may accompany the inspector.

(b) Safety and health inspectors shall be authorized to deny the right of accompaniment under this section to any person whose participation interferes with a fair and orderly inspection. With regard to facilities classified in the interest of national security, only persons authorized to have access to such facilities shall be allowed to accompany a Safety and Health Inspector in such areas.

(c) Safety and health inspectors shall consult with employees concerning matters of occupational safety and health to the extent deemed necessary for the conduct of an effective and thorough inspection. During the course of an inspection, any employee shall be afforded an opportunity to bring to the attention of the Safety and Health Inspector any unsafe or unhealthful working condition which the employee has reason to believe exists in the workplace.

§ 1960.28 Reports of unsafe or unhealthful working conditions.

(a) The purpose of employee reports is to inform agencies of the existence of unsafe or unhealthful working conditions. This section provides guidance in establishing a channel of communication between agency employee and those with responsibilities for safety and health matters, e.g., their supervisor, the Designated Agency Safety and Health Official, safety and health committees (where established), the head of the agency, or the Secretary of Labor. These channels of communication are intended to assure prompt analysis and response to reports of unsafe or unhealthful working conditions in accordance with the requirements of Executive Order 12196. Since many safety and health problems can be eliminated as soon as they are identified, the existence of a formal channel of communication shall not preclude immediate corrective action by an employee's supervisor in response to oral reports of unsafe or unhealthful working conditions where such action is possible. Nor should an employee be required to await the outcome of such an oral report before filing a written report pursuant to the provisions of this section.

(b) A report under this part is not a grievance. However, nothing in this section is intended to interfere in any way with the prior, simultaneous, or subsequent use by any employee of the grievance procedures available to the employees of an agency, pursuant to the Federal Service Labor-Management Relations statute which makes a negotiated grievance procedure the exclusive means of resolving grievances (5 USC 7121).

(c) Any employee or representative of employees, who believes that an unsafe or unhealthful working condition exists in any workplace where such employee is employed, shall be authorized to request an inspection of such workplace by making a report of the unsafe or unhealthful working condition to an appropriate agency Safety and Health Official, for this purpose. The report shall be reduced to writing either by the person submitting the report or, in the case of a verbal notification, by the person designated to receive the reports in the workplace. Any such report shall set forth the grounds for the report and shall contain the name of the employee or representative of employees. Upon the request of the person making such report, the Designated Agency Safety and Health Official or that official's designee for this purpose shall not disclose the name of such person, or the names of individual employees referred to in the report, to anyone other than authorized representatives of the Secretary of Labor. In the case of imminent danger situations, employees shall make reports by the most expeditious means available.

(d) *Reports received by the agency.* (1) Each written report of an unsafe or unhealthful working condition shall be recorded on a log maintained by the agency's designated Safety and Health Official or that official's designee at the establishment. If any agency finds it inappropriate to maintain a log of written complaints at the establishment level, it may avail itself of procedures set forth in § 1960.72.

(2) A sequentially numbered case file, coded for identification, shall be assigned for purposes of maintaining an accurate record of the report and the response thereto. As a minimum, each establishment's log shall contain the following information: date, time, code/reference/file number, location of condition, brief description of the condition, classification (imminent danger, serious or other), and date and nature of action taken.

(3) Executive Order 12196 requires that agency inspections be conducted within 24 hours for imminent danger conditions, within three working days for potentially serious conditions, and within 20 working days for other than serious safety and health risk conditions. The employee submitting the report of unsafe or unhealthful condition shall be notified in writing of the inspection results not later than 30 days after the completion of the inspection. If such notice cannot be issued within 30 days, the employee shall be notified of the reasons for the delay and given a date by which the employee may reasonably expect to receive the notice, which shall include plans for abating any hazards discovered during the inspection. The notification shall include a statement of the employee's right to request review by the certified safety and health committee. An agency's investigation report, if any, shall be made available to the Secretary or the Secretary's authorized representative on request.

(4) When an agency has established occupational safety and health committees which meet the requirements of Executive Order 12196, an employee or employee representative, if substantially dissatisfied with an agency's response to a report of a unsafe or unhealthful condition, may submit a request for review to the appropriate safety and health committee.

(e) *Reports received by the Secretary of Labor.* (1) Agency safety and health programs must have provisions for responding to employees' reports of unsafe or unhealthful working conditions and the Secretary encourages employees to use those agency procedures as the most expeditious means of achieving abatement of hazardous conditions. It is recognized, however, that despite the existence of such procedures, employee reports may be received directly by the Secretary.

(2) When such reports are received directly from an employee or employee representative, the Secretary shall, where a certified safety and health committee has been established, forward the report to the agency for investigation. Where there is no certified safety and health committee, the Secretary may initiate an inspection or other appropriate action.

(3) When the Secretary determines that an inspection is warranted in response to an employee's or employee representative's report of unsafe or unhealthful working conditions, the Secretary shall observe the same response times as required of the agencies under the Executive Order and paragraph (d)(3) of this section.

§ 1960.29 Accident investigation.

While all accidents should be investigated, the extent of such investigation shall be reflective of the seriousness of the accident. In any case, each incident which results in a fatality, or the hospitalization of five or more employees, or property damage of $100,000 or more shall be investigated to determine the causal factors involved. Except to the extent necessary to protect employees and the public, evidence at the scene of an accident shall be left untouched until inspectors have an opportunity to examine it. The investigative report of the incident shall include appropriate documentation on data, time, location, description of operation, description of accident, photographs, interview of employees and witnesses, measurements, and other pertinent information. A copy of the investigation report shall be forwarded to the official in charge of the workplace, the appropriate safety and health committee, and the exclusive employee representative, if any. The investigation report shall be made available to the Secretary or his authorized representative upon request.

§ 1960.30 Abatement of unsafe or unhealthful working conditions.

(a) The agency shall ensure the prompt abatement of unsafe and unhealthful conditions. Where a Notice of an Unsafe or Unhealthful Working Condition has been issued, abatement shall be within the time set forth in the notice.

(b) The procedures for correcting unsafe or unhealthful working conditions shall include a follow-up to the extent necessary, to determine whether the correction was made. If, upon the follow-up, it appears that the correction was not made, or was not carried out in accordance with an abatement plan submitted pursuant to paragraph (c) of this section, the official in charge of the establishment and the appropriate safety and health committee shall be notified of the failure to abate.

(c) The official in charge of the establishment shall promptly submit an abatement plan to the Designated Agency Safety and Health Official, if in the judgment of the establishment official the abatement of an unsafe or unhealthful working condition will not be possible within 30 working days. Such plan shall contain an explanation of the circumstances of the delay in abatement, a proposed timetable for the abatement, and a summary of steps being taken in the interim to protect employees from being injured as a result of the unsafe or unhealthful working condition. A copy of the plan shall be sent to the safety and health committee, where established, and, if no committee exists, to the representative of the employees. Any changes in an abatement plan will require the submission of a new plan in accordance with the provisions of this section.

(d) When a hazard cannot be abated without assistance of the General Services Administration or other Federal lessor agency, the occupant agency shall act with the lessor agency to secure abatement. Procedures for coordination with the General Services Administration are contained in subpart E.

§ 1960.31 Inspections by OSHA.

The Secretary of Labor or the Secretary's authorized representatives are authorized to conduct, when the Secretary deems necessary, announced or unannounced inspections of agency workplaces in the following situations:

(a) Where an agency has not established occupational safety and health committees in accordance with subpart F of this part, or where established committees have been decertified;

(b) In response to a request from half the membership of record of any certified safety and health committee;

(c) As an integral part of OSHA's evaluation of an agency's safety and health program in accordance with subpart J; of this part, and

(d) In response to an employee's report of an imminent danger situation where neither the agency nor the appropriate safety and health committee has responded to the employee.

The Secretary's inspectors or evaluators are authorized: to enter without delay, and at reasonable times, any building, installation, facility, construction site, or other area, workplace, or environment where work is performed by employees of the agency; to inspect and investigate during regular working hours and at other reasonable times, and within reasonable limits and in a reasonable manner, any such place of employement, and all pertinent conditions, structures, machines, apparatus, devices, equipment, and materials therein, and to question privately any employee, any supervisory employee, and/or any official in charge of an establishment. OSHA inspections shall follow the general format set forth for agency inspections in other applicable parts of this subpart.

§§ 1960.32-1960.33 [Reserved]

Subpart E—General Services Administration and Other Federal Agencies

§ 1960.34 General provisions.

Within six months of the effective date of this part, the Secretary of Labor and the Administrator of the General Services Administration (GSA) shall initiate a study of conflicts that may exist in their standards concerning Federal buildings, leased space, products purchased or supplied, and other requirements affecting Federal employee safety and health. Both agencies shall establish and publish a joint procedure for resolving conflicting standards. All other Federal agencies that have authority for purchasing equipment, supplies, and materials, and for controlling Government space, as well as the leasing of space, shall also be subject to the requirements of this subpart, including publication of a procedure for resolving conflicting standards.

(a) In order to assist agencies in carrying out their duties under section 19 of the Act, Executive Order 12196, and this part, the Administrator or the Administrator's designee shall:

(1) Furnish, upon an agency's request, owned or leased space which:

(i) Has had a pre-occupancy inspection to identify recognized hazards or violations of OSHA standards and

(ii) Meets any special requirements pertaining to safety and health considerations submitted by the requesting occupant agency;

(2) Repair, renovate, or alter, upon an agency's request, owned or leased space in a planned and controlled manner to reduce or eliminate, whenever possible, any hazardous exposure to the occupant agency's employees;

(3) Accompany, upon request, the Secretary or the Secretary's designee on any inspection or investigation of a facility subject to the authority of the General Services Administration. Requests made for this purpose shall, whenever possible, be made at the GSA regional level in order to facilitate prompt assistance;

(4) Investigate, upon an official agency request, reports of unsafe or unhealthful conditions within the scope of GSA's responsibility. Such investigation, when requiring an on-site inspection, shall be completed within 24 hours for imminent danger situations, within three working days for potentially serious conditions, and within 20 working days for other safety and health risk conditions;

(5) Abate unsafe or unhealthful conditions disclosed by reports, investigation, or inspection within 30 calendar days or submit to the occupant agency's designated liaison official an abatement plan. Such abatement plan shall give priority to the allocation of resources to bring about prompt abatement of the conditions. (GSA shall publish procedures for abatement of hazards in the Federal Property Management Regulations—41 CFR 101);

(6) Establish an occupancy permit program which will regulate the types of activities and occupancies in facilities in order to avoid incompatible groupings, e.g., chemical or biological laboratories in office space. GSA shall seek to consolidate Federal laboratory operations in facilities designed for such purposes;

(7) Ensure that agency safety and health problems still outstanding are resolved prior to renegotiation of leases, and

(8) Ensure that GSA or other Federal lessor agencies' building managers maintain a log of reports of unsafe or unealthful conditions submitted by tenants to include: date of receipt of report, action taken, and final resolution.

(b) *Product safety.* Agencies such as GSA, DOD, and others which procure and provide supplies, equipment, devices, and material to be available for use by other agencies shall establish and maintain a product safety program which:

(1) Ensures that items procured will allow user agencies to use such products for the purpose intended and comply with OSHA standards or NIOSH criteria without modification, work method alterations, or additional personal protective equipment;

(2) Requires that products meet the applicable safety and health requirements of Federal law and regulations issued thereunder;

(3) Ensures that in providing hazardous material such material will be labelled to alert users, shippers, and storage or emergency personnel to basic information concerning flammability, toxicity, compatibility, first aid procedures, and normal as well as emergency procedures;

(4) Ensures availability of appropriate safety, rescue, and personal protective equipment to supply user agencies. The writing of Federal procurement specifications will be coordinated by GSA with OSHA/NIOSH as needed to assure purchase of approved products;

(5) Ensures that products recalled by the manufacturer, either voluntarily or by order from a regulatory authority, are removed from inventory. Each recall notice or order shall be forwarded to all agencies which have ordered such product from or through the procuring/supplying Federal agency, e.g., GSA, DOD, etc.;

(6) Includes preparation of FEDSTD 313, Material Safety Data Sheets (MSDS), involving all interested agencies in review to keep the standard current. MSDS provided by agencies or contractors shall meet the requirements of FEDSTD 313 and be furnished to DOD for filing and distribution.

(c) In order to assist agencies in carrying out their duties under section 19 of the Act, Executive Order 12196, and this part, the DOD will operate and maintain an automated system to distribute copies of MSDS to all agencies or their establishments as requested.

(d) All Federal agencies shall use MSDS provided by DOD when purchasing hazardous materials (as defined by FEDSTD 313) from commercial sources, and shall require MSDS from the supplier upon delivery of the material.

§ 1960.35 [Reserved]

Subpart F—Occupational Safety and Health Committees

§ 1960.36 General provisions.

(a) The occupational safety and health committees described in this subpart are organized and maintained basically to monitor and assist an agency's safety and health program. These committees assist agencies to maintain an open channel of communications between employees and management concerning safety and health matters in agency workplaces. The committees provide a method by which employees can utilize their knowledge of workplace operations to assist agency management to improve policies, conditions, and practices.

(b) Agencies may elect to establish safety and health committees meeting the minimum requirements contained in this subpart. When such committees are not established or have been decertified, the Secretary is authorized by section 1-401 (i) of Executive Order 12196 to conduct unannounced inspections of agency workplaces when the Secretary determines them necessary.

§ 1960.37 Committee organization.

(a) For agencies which elect to utilize the committee concept, safety and health committees shall be formed at both the national level and, for agencies with field or regional offices, at appropriate levels within the agency.

(1) The national level committee shall represent the major headquarters units where agency safety and health policy is formulated and implemented. The principal function of national committees shall be to monitor and assist in agency safety and health policy.

(2) Committees at other appropriate levels shall be organized at agency establishments or groupings of establishments consistent with the mission, size and organization of the agency and its collective bargaining configuration. The agency shall form committees at the lowest practicable local level. The principal function of the establishment (or local) committees is to monitor and assist in the execution of the agency's safety and health policies and program at the workplaces within their jurisdiction. Any dispute regarding appropriate levels shall be resolved by the Secretary after consultation with the agency involved.

(3) Any agency electing to utilize safety and health committees under Executive Order 12196 and this subpart shall establish committees in all agency establishments or groupings of establishments and these committees shall effectively cover all employees.

(b) Committees shall have equal representation of management and nonmanagement employees, who shall be members of record.

(1) Management members shall be appointed in writing by the person empowered to make such appointments.

(2) Where employees are not represented by collective bargaining arrangements, nonmanagement members of establishment level committees shall be determined through procedures devised by the agency, which provide for effective representation of employees. Nonmanagement members of the national level committee shall be selected through procedures devised by the agency and organizations having local collective bargaining agreements anywhere in the agency.

(3) Where employees are represented by collective bargaining arrangements, nonmanagement members of both national and establishment level committees shall be determined in accordance with the terms of such arrangements.

(c) Committee members shall serve overlapping terms. Such terms shall be of at least two years duration except when the committee is initially organized.

(d) The committee chairperson shall be nominated from among the committee's members and shall be elected by the committee members. Management and nonmanagement members shall alternate in this position. Maximum service time as chairperson shall be two consecutive years.

(e) Committees shall meet regularly, at least quarterly. Special meetings shall be held as necessary.

(1) Adequate advance notice of committee meetings shall be furnished to employees.

(2) Each meeting shall be conducted pursuant to a prepared agenda.

(3) Written minutes of each committee meeting shall be maintained and distributed to each committee member, and made available to employees and to the Secretary upon request.

§ 1960.38 Committee certification.

(a) Upon forming such committees, agencies shall submit information to the Secretary concerning:

(1) the existence, name of chairperson, location, and coverage, in terms of establishments and population, of such committees, certifying to the Secretary that such committees meet the reqirements of this subpart, and

(2) other data as the Secretary deems necessary to carry out specified duties under this part.

(b) If, upon investigation, the Secretary determines that the operations of a committee do not meet the requirements of this subpart, the Secretary shall notify the agency and identify the deficiencies to be remedied. If the deficiencies are not satisfactorily corrected within 90 days, the committee shall not be deemed a committee under Executive Order 12196 and this part.

§ 1960.39 Agency responsibilities.

(a) Agencies shall make available to committees all agency information relevant and necessary to their duties, except where prohibited by law. Examples of such information include the agency's safety and health policies and program, human and financial resources availble to implement the program, accident, injury, and illness data, epidemiological data, Material Safety Data Sheets, inspection reports, abatement plans, and internal and external evaluation reports.

(b) Agencies shall provide all committee members appropriate training as required by subpart H of this part.

§ 1960.40 Establishment committee duties (responsibilities).

(a) The safety and health committee is an integral part of the safety and health program and helps ensure effective implementation of the program at the establishment level.

(b) An establishment committee formed under this subpart shall, except where prohibited by law:

(1) Monitor and assist the safety and health program at establishments under its jurisdiction and make recommendations to the official in charge on the operation of the program;

(2) Monitor findings and reports of workplace inspections to ensure that appropriate corrective measures are implemented;

(3) When requested by the agency Safety and Health Official, or when the committee deems it necessary for effective monitoring of agency establishment inspection procedures, participate in inspections of the establishment;

(4) Review internal and external evaluation reports concerning the establishment safety and health program;

(5) Review procedures for handling safety and health suggestions and recommendations from employees;

(6) When requested by the agency Safety and Health Official, or when the committee deems it necessary, comment on standards proposed pursuant to the provisions of subpart C of this part;

(7) Monitor the level of resources allocated and spent on the establishment safety and health program, and

(8) Review management responses to reports of hazardous conditions, safety and health program deficiences, and allegations of discrimination. If half the members of record on the committee are not substantially satisfied by the response, they may request the Secretary to conduct an appropriate investigation or inspection.

§ 1960.41 National committee duties (responsibilities).

National committees established under this subpart shall, except where prohibited by law:

(a) Monitor performance of the agency safety and health program and make policy recommendations to the head of the agency on the operation of the program;

(b) Monitor and assist with the development and operation of the agency's establishment committees. As appropriate, monitor and review: reports of inspections; internal and external evaluation reports; agency safety and health training programs; proposed agency standards; agency plans for abating hazards, and responses to reports to hazardous conditions, safety and health program deficiencies, and allegations of discrimination, and

(c) Monitor the resources allocated to the entire agency safety and health program.

§ 1960.42—1960.45 [Reserved]

Subpart G—Allegations of Discrimination

§ 1960.46 Agency responsibility.

The head of each agency shall assure that no person shall discharge or in any manner discriminate against any employee because such employee has filed any complaint or instituted or caused to be instituted any proceeding under or related to section 19 of the Act, Executive Order 12196, and this part, or has participated in or is about to participate in any such proceeding, or because of the exercise by such employee on behalf of himself or herself or others of any right afforded by section 19 of the Act, Executive Order 12196, or this part. These rights include, among others, the right of an employee to choose not to perform his or her assigned task because of a reasonable apprehension of health risk or serious injury coupled with a reasonable belief that no less drastic alternative action is available.

§ 1960.47 Employee reports of discrimination.

Any employee who believes that he or she has been subjected to discriminatory action by an agency official may file a report in accordance with established agency procedures. Upon finding by the agency head that the provisions of this subpart have been violated, the employee shall be afforded all appropriate relief including rehiring

or reinstatement of the employee to his or her former position with back pay.

§ 1960.48 Investigation procedures.

(a) Each agency shall establish a procedure for the investigation of such allegations of discrimination. These allegations shall be investigated by properly qualified personnel at the organizational level above that responsible for taking the alleged discriminatory action.

(b) The agency shall provide review procedures, which involve safety and health committees where established, for use by complainants dissatisfied with the initial agency determination regarding the allegations.

(c) Employees filing allegations of discrimination shall be advised in writing of the agency's initial determinations and any determinations regarding subsequent review.

(d) Occupational safety and health committees, where established, shall be advised of agency activity regarding allegations of discrimination and any agency determinations thereof.

(e) Upon request, agency officials shall provide copies of discrimination investigation findings, if any, to the Secretary.

§§ 1960.49-1960.53 [Reserved]

Subpart H—Training

§ 1960.54 Training of top management officials.

Each agency shall provide top management officials with orientation and other learning experiences which will enable them to manage the occupational safety and health programs of their agencies. Such orientation should include coverage of section 19 of the Act, Executive Order 12196, the requirements of this part, and the agency safety and health program.

§ 1960.55 Training of supervisors.

(a) Each agency shall provide occupational safety and health training for supervisory employees to include: supervisory responsibility for providing and maintaining safe and healthful working conditions for employees, the agency occupational safety and health program, section 19 of the Act, Executive Order 12196, this part, occupational safety and health standards applicable to the assigned workplaces, agency proocedures for reporting hazards, agency procedures for reporting and investigating allegations of discrimination, and agency procedures for the abatement of hazards, as well as other appropriate rules and regulations.

(b) This supervisory training shall include introductory and specialized courses and materials which will enable supervisors to recognize and eliminate, or reduce, occupational safety and health hazards in their working units. Such training shall also include the development of requisite skills in managing the agency's safety and health program within the work unit, including the training and motivation of subordinates toward safe and healthful work practices.

§ 1960.56 Training of safety and health specialists.

(a) Each agency shall provide occupational safety and health training for safety and health specialists through courses, laboratory experiences, field study, and other formal learning experiences to prepare them to perform the necessary technical monitoring, consulting, testing, inspecting, designing, and other tasks related to program development and implementation, as well as hazard recognition, evaluation and control, equipment and facility design, standards, analysis of accident, injury, and illness data, and other related tasks.

(b) Agency heads shall be responsible for implementing career development programs for their safety and health specialists to enable staff to meet present and future program needs of the agency.

§ 1960.57 Training of safety and health inspectors.

Each agency shall provide training for safety and health inspectors with respect to appropriate standards, and the use of appropriate equipment and testing procedures necessary to identify, evaluate, and suggest means of abating hazards during or following their assigned inspections, as well as preparation of reports and other documentation to support the inspection findings.

§ 1960.58 Training of collateral duty safety and health personnel.

Within six months after July 1, 1980, or on appointment of an employee to a collateral duty position, each agency shall provide training for collateral duty safety and health personnel commensurate with the scope of their assigned safety and health responsibilities. Collateral duty assignments vary from agency to agency and establishment to establishment. They may include such responsibilities as: hazard recognition; evaluation and control; reporting and recordkeeping, and program administration and promotion.

§ 1960.59 Training of occupational safety and health committee members.

Within six months after July 1, 1980, or on appointment of an employee to a committee, each agency shall provide training for all members of certified occupational safety and health committees commensurate with the scope of their assigned occupational safety and health responsibilities. Such training shall include: the agency occupational safety and health program; section 19 of the Act; Executive Order 12196; this part; agency procedures for the reporting of and abatement of hazards; agency procedures for reporting and investigating allegations of discrimination; the recognition of hazardous conditions or environments; identification and use of occupational safety and health standards, and other appropriate rules and regulations.

§ 1960.60 Training of employees and employee representatives.

(a) Each agency shall provide appropriate safety and health training for employees including specialized job safety and health training appropriate to the work performed by the employee, for example: clerical; printing; welding; crane operation; chemical analysis, and computer operations. Such training also shall inform employees of the agency occupational safety and health program, with emphasis on their rights and responsibilities.

(b) Agency heads shall provide occupational safety and health training for employees of the agency who are representatives of employee groups, such as labor organizations which are recognized by the agency. This training shall include both introductory and specialized courses and materials that will enable such groups to function appropriately in ensuring safe and healthful working conditions and practices in the workplace and enable them to effectively assist in conducting workplace safety and health inspections. Nothing in this paragraph shall be construed to alter training provisions provided by law, Executive Order, or collective bargaining arrangements.

§ 1960.61 Training assistance.

(a) After the effective date of Executive Order 12196, the Secretary shall conduct such orientation as the Secretary deems reasonable and necessary, for designated Safety and Health Officials which will enable them to manage the occupational safety and health programs of their agencies. Such orientation shall include coverage of section 19 of the Act, Executive Order 12196, and the requirements of this part.

(b) Upon request and with reimbursement, the Department of Labor shall provide each agency with training materials to assist in fulfilling the training needs of this subpart, including resident and field training courses designed to meet selected training needs of agency safety and health specialists, safety and health inspectors, and collateral duty safety and health personnel. These materials and courses in no way reduce each agency's responsibility to provide whatever specialized training is required by the unique characteristics of its work.

(c) In cooperation with OPM, the Secretary of Labor will develop guidelines and/or provide materials for the safety and health training programs for high-level managers, supervisors, members of committees, and employee representatives.

§§ 1960.62-1960.65 [Reserved]

Subpart I—Recordkeeping and Reporting Requirements

§ 1960.66 Purpose, scope and general provisions.

(a) The purpose of this subpart is to establish uniform requirements for the collection and compilation by agencies of occupational safety and health data, for proper evaluation and necessary corrective action and to assist the Secretary in meeting the requirement to develop and maintain an effective program of collection, compilation, and analysis of occupational safety and health statistics. The term incident as hereinafter used in this subpart, shall include all injuries, illnesses and property damage accidents.

(b) In order to perform his duties under section 19 of the Act and Executive Order 12196, particularly with respect to providing the President with current information about the Federal agency safety and health program, it is necessary that the Secretary be promptly informed of serious incidents involving agency employees as provided in Section 1960.71. Assistance to agencies in the investigation of such incidents is available pursuant to the provisions of Executive Order 12196.

(c) Each agency shall utilize the information collected through its management information system to identify unsafe and unhealthful working conditions, and to establish program priorities.

(d) The Department of Labor shall provide Federal agencies with the forms and instructions for meeting the recordkeeping and reporting requirements specified in §§ 1960.67, 1960.68, 1960.69 and 1960.70.

(e) The provisions of this subpart are not intended to discourage agencies from utilizing recordkeeping and reporting forms which contain a more detailed breakdown of information than the forms provided by the Department of Labor.

(f) Information required to be submitted to the Department of Labor by this subpart may be submitted on media processable by electronic data processing equipment provided that such media comply with the requirements of the Office of Federal Agency Safety and Health Programs, U.S. Department of Labor.

(g) Information concerning occupational injuries, illnesses or accidents which, pursuant to statute or Executive Order, must be kept secret in the interest of national defense or foreign policy, shall be recorded on separate forms. Such records shall not be submitted to the Department of Labor, but may be used by the appropriate Federal agency in evaluating the agency's program to reduce occupational injuries, illnesses and accidents.

§ 1960.67 Record or log of federal occupational injuries and illnesses.

(a) Each Federal agency shall maintain a record or log of all recordable occupational injuries and illnesses of each establishment.

(b) Within six working days after receiving information on a recordable occupational injury or illness, appropriate information concerning such injury or illness shall be entered on the record or log. For this purpose, OSHA Form No. 100F, or its equivalent, shall be used and shall be completed in the detail required by that form and the instructions constained therein.

(c) As a minimum, any occupational injury or illness reported by an employee on a Form CA-1 or CA-2 (except first aid cases) to the Office of Worker's Compensation Programs, Department of Labor, shall be considered recordable on the log.

§ 1960.68 Supplementary record of federal occupational injuries and illnesses.

In addition to the record or log of Federal occupational injuries and illnesses provided for under Section 1960.67, each Federal agency shall maintain a supplementary record for each occupational injury and illness. The record shall be completed within six working days after the receipt of information that a recordable occupational injury or illness has occurred. For this purpose, OSHA Form No. 101F, or its equivalent, shall be completed in the detail required by the form and the instructions therein.

§ 1960.69 Annual summaries of federal occupational injuries and illnesses.

(a) Each Federal agency, on a calendar year basis, shall compile an annual summary of occupational injuries and illness for each reporting unit listed and submitted pursuant to § 1960.75. The summaries shall be based on the record or log of Federal occupational injuries and illnesses maintained pursuant to § 1960.67. OSHA Form No. 102F shall be used for this purpose, and shall be completed in the form and detail required by that form and the instructions contained therein.

(b) Each agency shall furnish the Department of Labor with a copy of its annual summaries compiled on the basis of reporting unit no later than 45 calendar days after the close of the calendar year.

§ 1960.70 Annual summaries of Federal occupational property damage incidents.

(a) Each Federal agency, on a calendar year basis, shall compile an annual summary of Federal occupational property damage incidents for each reporting unit. OSHA Form No. 102FF shall be used for this purpose, and shall be completed in the form and detail required by that form and the instructions contained therein.

(b) Each annual summary of Federal occupational property damage incidents shall be completed and forwarded to the Department of Labor no later than 45 calendar days after the close of the calendar year.

§ 1960.71 Reporting of serious incidents.

(a) Within 8 hours after the occurrence of an employment accident, the head of the Federal agency shall report by telephone or telegraph to the Office of Federal Agency Safety and Health Programs:

(1) Any occupational injury which is fatal to one or more employees;

(2) Any occupational incident which results in the hospitalization of five or more employees;

(3) Any occupational illness which results in death;

(4) Any occupational property damage accident which results in $100,000 or more;

(5) Any occupational incident involving both Federal and non-Federal employees which results in a fatality or the hospitalization of five or more such employees.

Accidents not immediately reportable, but which result in death within six months of the date of the accident, shall be reported within 8 hours of the time

the employer becomes aware of the death.

(b) The report shall relate the circumstances of the incident, names of individuals involved, any actions taken by the agency, the number of fatalities, and/or injuries and illnesses and the extent of any injuries. The Secretary may require such additional information in writing or otherwise, as he deems necessary.

§ 1960.72 Location and utilization of records and reports.

(a) The provisions of this section, dealing with the availability of information compiled pursuant to this subpart, are designed to guide agencies in providing agency employees and their representatives with the basic information necessary to assure that they can actively participate in an agency safety and health program. The provisions of this section are also designed to encourage agencies to allow agency safety and health inspectors to have direct access to the accident, injury and illness records of the establishments they are inspecting in order that they may better carry out their duties pursuant to subpart D of this part.

(b) The log and supplementary records required by §§ 1960.67 and 1960.68 shall be maintained at each establishment. Where, for reasons of efficient administration or practicality, an agency must maintain these records at a place other than at each establishment, such agency shall ensure that there is available at each establishment a copy of these records. These records shall be complete and as current as possible; in no case shall more than 45 days elapse after the recording of an illness or injury occurring in an establishment and the availability of the records reflecting that injury or illness at that establishment.

(c) For:

(1) Agencies engaged in activites such as agriculture, construction, transportation, communications, and electric, gas and sanitary services, which may be physically dispersed, the log and supplementary records, or copies thereof, may be maintained at a place to which employees report each day.

(2) Personnel who do not primarily report or work at a single establishment, and who are generally not supervised in their daily work, such as traveling employees, technicians, engineers, etc., the long and supplementary records, or copies thereof, may be maintained at the base from which personnel operate to carry out their activities.

(d) Each Federal agency shall post a copy of the annual summary of Federal occupational injuries and illnesses for an establishment, as compiled pursuant to §§ 1960.67 or 1960.69, at such establishment, no later than 45 calendar days after the close of the calendar year, or otherwise disseminate a copy of the annual summary for an establishment in written form to all employees of the establishment. Copies of the annual summary shall be posted for a minimum of 30 consecutive days in a conspicuous place or places in the establishment where notices to employees are customarily posted. Where establishment activities are physically dispersed, the notice may be posted at the location to which employees report each day. Where employees do not primarily work at or report to a single location, the notice may be posted at the location from which the employees operate to carry out their activities. Each Federal agency shall take necessary steps to ensure that such summary is not altered, defaced, or covered by other material.

(e) The head of each agency shall make provisions to ensure access to establishment log and annual summary of records, to establishment Occupational Safety and Health Committees, and to that establishment's employees, former employees and employee representatives.

(f) Agency safety and health inspectors shall also have access to accident, injury and health records maintained under this subpart and in accordance with the provisions of § 1960.26(a)(1).

§ 1960.73 Access to records by Secretary.

The records required to be maintained under the provisions of this subpart shall also be available and made accessible to the Secretary or his authorized representative (including personnel of the National Institute for Occupational Safety and Health). The Secretary or his authorized representative shall request access to such records from the head of the agency prior to examination.

§ 1960.74 Retention of records.

The records and reports required to be maintained under the provisions of this subpart shall be retained by each agency for five years following the end of the calendar year to which they relate, at any location including a Federal record retention center, to which the Secretary or his authorized representative would have reasonable access. In addition, records required by OSHA standards shall be retained in accordance with those standards.

§ 1960.75 Identification of reporting units.

(a) Each Federal agency shall submit the following information to the Department of Labor, ATTN: Office of Federal Agency Safety and Health Programs, no later than January 1, 1981 and at such other times as changes occur:

(1) A list of the names and addresses of each Federal reporting unit which will be covered in the records and reports required by this subpart.

(2) A brief description of any differences between an agency's internal recordkeeping and reporting system and the recordkeeping and reporting system provided by this subpart, including differing forms.

(b) Any Federal agency created or reorganized after January 1, 1981 shall submit the above information within sixty working days of commencement of operations as a new entity.

§ 1960.76 Agency annual reports.

(a) The Act and E.O. 12196 require all Federal agency heads to submit to the Secretary an annual report on their agency's occupational safety and health program, containing such information as the Secretary prescribes.

(1) Each agency shall submit to the Secretary by April 1 of each year a report describing the agency occupational safety and health program of the previous calendar year, and objectives for the current year. The report shall include a summary of the agency's self-evaluation findings as required by § 1960.78(b).

(2) The Secretary shall furnish guidelines to agency heads by January 1 of each year concerning the preparation of this report.

(3) The agency reports shall be used in the preparation of the Secretary's report to the President and in selecting winners of the annual President's Safety Awards.

(b) The Secretary shall submit to the President by October 1 of each year a summary report of the status of the occupational safety and health of Federal employees, based on agency reports, evaluations of individual agency progress and problems in correcting unsafe and unhealthful working conditions, and recommendations for improving their performance.

§ 1960.77 [Reserved]

Subpart J—Evaluation of Federal Occupational Safety and Health Programs

§ 1960.78 Purpose and scope.

(a) The purpose of this subpart is to establish a comprehensive program for the evaluation of Federal employee occupational safety and health

programs. This subpart includes the responsibilities of agency heads in conducting self-evaluations of the effectiveness of thier occupational safety and health programs, and the responsibilities of the Secretary in evaluating the extent to which each agency head has developed and implemented agency programs in accordance with the requirements of Executive Order 12196 and this part.

(b) Agency heads shall develop and implement a program for evaluating the effectiveness of their agency's occupational safety and health program. Agency self-evaluations shall be conducted annually, and a summary report submitted to the Secretary.

(c) The Secretary shall conduct a comprehensive evaluation of each Federal agency's occupational safety and health program. Evaluations shall be conducted on a regular schedule to determine the performance levels of each agency's program. The Secretary shall submit to the President each year: a summary report of the status of the occupational safety and health of Federal employees; Department of Labor evaluations, together with agency responses, of individual agency progress and problems in correcting unsafe and unhealthful working conditions, and recommendations for improving agency's performance.

§ 1960.79 Self-evaluations of occupational safety and health programs.

(a) Agency heads shall develop and implement a program of annual self-evaluations to determine the effectiveness of thier occupational safety and health programs. The self-evaluations are to include annual qualitative assessments of the extent to which their agency safety and health programs are:

(1) Developed in accordance with the requirements set forth in Executive Order 12196 and this part and,

(2) Implemented effectively in all agency field activities.

(b) Each agency self-evaluation program shall have established scheduling procedures which ensure that all Field activities are evaluated at least every three years. Field activities which demonstrate a high potential for lost workday injuries and illnesses shall have comprehensive annual evaluations. Field activities are considered to have a high potential for injuries or illnesses when:

(1) Incidence rates for injuries or illnesses are higher than the government average; or

(2) Employees are routinely exposed to toxic chemicals, biological agents, and/or radiological operations, or

(3) Employees perform activities in high hazard operations; for example, warehousing sites, machine shops, construction activities, printing plants, maintenance areas, and wood-working shops.

(c) Agency self-evaluation programs shall be conducted through independent visits by safety and health professionals, that is, by professionals outside the jurisdiction of the agency official responsibile for management of establishments being evaluating.

(d) Agency heads shall utilize the results of their self-evaluations and evaluations conducted by the Secretary in determining priorities for allocation of human and financial resources during each annual budget cycle.

§ 1960.80 Secretary evaluations of agency occupational safety and health programs.

(a) In accordance with section 1-401(h), the Secretary shall develop a comprehensive program for evaluating an agency's occupational safety and health program. To accomplish this, the Secretary shall conduct:

(1) A complete and extensive evaluation of all elements of an agency's occupational safety and health program on a regular basis;

(2) Special studies of limited areas of an agency's occupational safety and health program as deemed necessary by the Secretary, and

(3) Field reviews and scheduled inspections of agency workplaces as deemed necessary by the Secretary.

(b) The Secretary shall develop and distribute to Federal agencies detailed documentation on the Department of Labor's evaluation program. The documentation shall include, but is not limited to:

(1) The major program elements included in a complete and extensive evaluation of an agency's occupational safety and health program;

(2) The methods and factors used to determine the effectiveness of each element of an agency's program;

(3) The factors used to define "large" or "high hazard" Federal agencies of establishments;

(4) The procedures for conducting evaluations including field visits and scheduled inspections, and

(5) The reporting format for agency heads in submitting annual summaries of their self-evaluation programs.

(c) The Secretary shall annually evaluate "large" or "high hazard" Federal agencies. "Small" and "low hazard" Federal agencies shall be evaluated at least once every three years.

(d) Prior to the initiation of an agency evaluation, the Department of Labor will review the annual agency self-evaluation summary report. If additional pertinent information and documentation are needed to explain the agency's evaluation program the Secretary will request this in writing from the agency head. Such information shall be submitted to the Secretary within 30 days of the receipt of the request.

(e) The Secretary will develop an "Occupational Safety and Health Program Evaluation Plan" before the initiation of the evaluation of an agency. The plan will define the type, content, and extent to which each program element is to be reviewed, as well as covering administrative concerns—budget, staffing, organization placement of the safety and health function, and on-site visits. Evaluation scheduling, employee participation, personnel and security considerations, hours of operation, and other factors deemed necessary to facilitate the desired evaluations shall be considered in the plan.

(f) To facilitate the evaluation process and to insure full understanding of the procedures to be followed and the support required from the agency, the Secretary, or the Secretary's representative, shall conduct an opening conference with the agency head. At the opening conference, the Secretary's authority and evaluation plan will be explained to the agency head.

(g) The agency evaluation shall be completed no later than 90 calendar days from the date of the opening conference.

(h) A report of the evaluation must be submitted to the agency head by the Secretary no later than 45 calendar days from the date of the closing conference.

(i) Agency heads shall respond to the evaluation report within 60 calendar days of receipt of the report.

(j) The Director of the Office of Federal Agency Safety and Health Programs and the agency's designated safety and health official are to report jointly to FACOSH on the Secretary's evaluation of the agency's progress.

§§ 1960.81-1960.83 [Reserved]

Subpart K—Field Federal Safety and Health Councils

§ 1960.84 Purpose.

(a) Executive Order 12196 provides that the Secretary shall "facilitate the exchange of ideas and information throughout the Government about occupational safety and health."

(b) Consistent with this objective, the Secretary will continue to sponsor and/or provide guidance for those Field

Federal Safety and Health Councils now established and in operation, and establish new field councils as necessary. The field councils will consist primarily of qualified representatives of local area Federal field activities whose duties pertain to occupational safety and health, and also of representatives of recognized local labor organizations, or other civilian employee organizations, at local area Federal field activities. For the purpose of this subpart the definition of field activity will be provided by each agency.

§ 1960.85 Role of the Secretary.

(a) The Secretary shall maintain liaison with agency heads to ensure that they encourage their field activities to participate actively in field council programs. To ensure maximum participation, the field councils' annual reports to the Secretary shall provide descriptions of the degree of Management and employee participation by the defined Federal field activities. The Secretary shall annually furnish each agency head with a report consolidating the information received as to the participation of the agency's several field installations in field council activities.

(b) The Secretary shall provide leadership and guidance and make available necessary equipment, supplies, and staff services to the Field Federal Safety and Health Councils to assist them in carrying out their responsibilities. The Secretary shall also provide consultative and technical services to field councils. These services shall involve aid in any phases of developing and planning programs; and in sponsoring, conducting or supporting safety and health training courses.

§ 1960.86 Establishing councils.

(a) Those field councils established and in operation prior to the effective date of this subpart will continue to function without interruption provided they are operating in accordance with the provision of their charter and this subpart.

(b) The Secretary may establish a council in any area where ten or more Federal establishments totaling 300 or more employees are located within an area having a radius of 50 miles. In any such area where there is no council already established, a field representative of the Secretary may, upon his own initiative or at the request of any establishment within the area, contact representatives of all establishments within the area and coordinate their efforts to organize a field council.

(c) After a new council has been organized, officers elected, and articles of organization drafted and accepted by the council membership, a formal request for recognition as a field council shall be sent to the Secretary. Upon approval of the Articles of Organization, a charter will be issued.

(d) At the first general meeting of the council, committees should be appointed and the cooperation of all participants should be solicited to aid the functioning of committees and the successful accomplishment of the council's objectives.

§ 1960.87 Objectives.

The basic objective of field councils is to accomplish the greatest possible reduction in the incidence, severity and cost of occupational accidents, injuries, and illnesses in the Federal Government. Field councils shall act on behalf of the Secretary or his designees on occupational safety and health activities in carrying out within their respective geographic areas the following functions:

(a) To act as a clearinghouse on information and data on occupational accidents, injuries, and illnesses and their prevention.

(b) To plan, organize and conduct field council meetings or programs which will give technical advice and information on occupational safety and health to representatives of participating agencies and employee organizations.

(c) To promote improvement of safety and health programs and organizations in each Federal agency represented or participating in council activities.

(d) To promote coordination, cooperation, and sharing of resources and expertise to aid agencies with inadequate or limited resources. These objectives can be accomplished in a variety of ways. For example, field councils could organize and conduct training programs for employee representatives, collateral duty and professional safety and health personnel, coordinate or promote programs for courtesy inspections, or, on request, conduct evaluations of the agencies' safety and health programs.

(f) To evaluate the safety and health problems peculiar to local conditions and facilitate solutions to these problems through council activities.

(g) To provide Federal Executive Boards, Federal Executive Associations, labor union organizations and other employee representatives with information on the administrative and technical aspects of safety and health programs.

(f) To develop a cooperative relationship with local community leaders by informing them of the existing functions and objectives of the council and by calling on them for support and participation in council meetings and activities.

§ 1960.88 Membership.

(a) Each field council shall consist of representatives of local Federal activities appointed by their respective activity heads as members or alternates. Such agency representation shall include both management and employee representatives. Activity heads should consult any appropriate certified agency occupational safety and health committees regarding selection of these representatives. Representatives shall be selected form individuals in the following categories:

(1) Federal occupational safety and health professionals.

(2) Related federal professionals, or collateral duty personnel. This includes persons employed in professions or occupations related to or concerned with safety and health of employees.

(3) Representatives of recognized Federal labor or other employee organizations. This category of membership includes representatives of recognized local labor organizations, if any, or other employee organizations representing civilian employees in each Federal field activity comprising the field council. Appointment of these members for attendance at meetings or participation in field council activities shall be by their respective activity heads after consultation with appropriate employee representatives or certified agency safety and health committees.

(4) Representatives from non-Federal organizations. Associate membership may be granted to any non-Federally employed person who has demonstrated interest in occupational safety and health. An associate member has no voting rights and may not hold any office.

(b) A primary objective of the field council is to facilitate an exchange of ideas and information with respect to health and safety. Accordingly, no maximum limitation shall be imposed by a council on itself, in regard to the numbers of personnel in any of the above categories that may be members and/or attend meetings and/or participate in field council activities.

(c) All officially designated members and representatives or their alternates shall have voting privileges and serve without additional compensation.

§ 1960.89 Organization.

(a) Field council officers shall include as a minimum, a chairperson, vice

chairperson, and secretary. Officers shall be elected for a one or two-year term on a calendar year basis by a majority vote of the members of record. Election of officers shall be held at least 60 days before the beginning of a calendar year. The election may be conducted at a regularly scheduled meeting or by letter ballot.

(b) Each council shall notify the appropriate OSHA Regional Office and the Office of Federal Agency Safety and Health Programs of the name, agency address, and telephone number of each newly elected official.

(c) Each council shall have an Executive Committee consisting of all elected officers, chairpersons of appointed committees and the immediate past chairperson of the field council.

(d) In addition to the Executive Committee, each council shall have either a membership committee, a program committee and a finance committee, or a council official designated responsibility in these areas. Additional committees may be appointed by the chairperson for specific purposes as warranted.

§ 1960.90 Participation.

(a) Federal agency heads shall ensure that each field activity having responsibility for the safety and health of agency employees is officially represented and actively participates in the programs of these councils. Agency heads shall ensure that such official representation includes the opportunity for active participation by employee organizations or representatives.

(1) Where certified occupational safety and health committees as described in Subpart F exist, employee members of the committees shall designate one individual for official appointment to field councils by the activity head.

(2) Where employees are represented through collective bargaining arrangements, but no committee exists, non-management members of field councils shall be designated by the exclusive bargaining representative for official appointment to field councils by the activity head.

(3) Where some employees in an activity are represented through collective bargaining units and others are not, the agency head shall solicit nominations from the labor union(s) or other employee organization(s) with collective bargaining status and from employees not represented through collective bargaining and shall select one of the nominees for official appointment as the employee representative on the field council.

(4) Agency heads shall appoint official non-management members of the field councils.

(b) Each activity shall appoint two voting members (with designated alternates), one representing management and one representing employees. The field council annual report shall reflect the participation in council meetings by appointed field activity voting members or their alternates.

(c) Field activity participation at meetings requiring travel in excess of 100 miles (one way) is encouraged but not required.

(d) Regarding travel to meetings, travel funds shall be made available equally to management and employee representation.

§ 1960.91 Operating procedures.

(a) The Executive Committee of each council shall meet at least 45 days before the beginning of each calendar year to approve an annual program for the council designed to accomplish the objectives and functions stated in § 1960.87. In addition, the Executive Committee shall meet periodically to ensure that the meetings and other activities of the council are being conducted as outlined in the council schedule.

(b) The council program shall include at least four meetings or activities per year dealing with occupational safety and health issues.

(c) Each field council shall submit to the Secretary or his designee by March 15 of each year a report describing the activities and programs of the previous calendar year and plans for the current year. In addition, the report shall address the participation of local agencies including representatives' attendance. The Office of Federal Agency Safety and Health programs, OSHA, shall furnish guidelines to field councils concerning the preparation of this report.

(d) Upon determination that a council is not operating in accordance with its charter and the provisions of this subpart, and after consultation with appropriate OSHA regional officials, the Secretary shall revoke the council's charter. Upon revocation of a charter, the council shall surrender all its government property to the appropriate OSHA regional official. Any continuing or future organization in the same geographical area shall not use the title Field Federal Safety and Health Council, or any derivation thereof, unless formally rechartered by the Secretary. Notification of revocation of a council's charter shall be sent to the chairperson, where identifiable, and to the appropriate OSHA Regional Office.

§§ 1960.92–1960.99 [Reserved]

[FR Doc. 80-24617 Filed 8-14-80; 8:45 am]
BILLING CODE 4510-26-M

Office of Pension and Welfare Benefit Programs

29 CFR Parts 2520 and 2530

Rules and Regulations for Reporting and Disclosure and Minimum Standards for Employee Pension Benefit Plans; Individual Benefit Reporting and Recordkeeping for Single Employer Plans

Correction

In FR Doc. 80-22911, appearing at page 51231, in the issue of Friday, August 1, 1980, make the following corrections:

(1) On page 51231, in the preamble under the heading designation of "SUMMARY" in the third column, the twenty-third line down, correct "employment" to read "employer".

(2) On page 51236, the first column, the third full paragraph down designated as number "4", the twelfth line down, correct "administration" to read "administrator".

(3) On page 51237, in the middle column, the third paragraph down, designated as "(ii)", the last line, correct "but" to read "not".

BILLING CODE 1505-01-M

---

29 CFR Parts 2520 and 2530

Rules and Regulations for Reporting and Disclosure and Minimum Standards for Employee Pension Benefit Plans; Individual Benefit Reporting and Recordkeeping for Single Employer Plans

AGENCY: Department of Labor.

ACTION: Proposed rule; correction.

SUMMARY: This document makes minor corrections in a document containing proposed regulations concerning individual benefit reporting to pension plan participants (and, in some cases, their beneficiaries), and individual benefit recordkeeping under the Employee Retirement Income Security Act of 1974 (the Act). (45 FR 51231, August 1, 1980)

FOR FURTHER INFORMATION CONTACT: Mary O. Lin, Plan Benefits Security Division, Office of the Solicitor, U.S. Department of Labor, Washington, D.C., 20210, (202) 523-9595, or Ronald D. Allen, Pension and Welfare Benefit Programs, U.S. Department of Labor,

Washington, D.C. 20216, (202) 523-8515. (These are not toll-free numbers.)

SUPPLEMENTARY INFORMATION: FR Doc. 80-22911, appearing at page 51231 in the Federal Register for August 1, 1980, is corrected as follows:

At page 51232 in the second column, under the preamble, heading designated as "B. Background", in the eighth line of the second paragraph, delete the first word "other";

At page 51236, in the second column, under the preamble heading designated as "G. Proposed Regulation", in the second line, correct "2520.105-11" to read "2520.105-2" and in the fourth line, "2530.209-9" to read "2530.209-2";

At page 51239, in § 2520.105-2, in the second column, under the regulation paragraph designated "(h) Manner of furnishing individual benefit reporting documents", in the next to last line, insert the words "or beneficiary" between "such participant" and "of the document".

Signed at Washington, D.C. this 12th day of August, 1980.

Ian D. Lanoff,

Administrator, Pension and Welfare Benefit Programs, Labor-Management Services Administration, U.S. Department of Labor.

[FR Doc. 80-24721 Filed 8-14-80; 8:45 am]

BILLING CODE 4510-29-M

DEPARTMENT OF THE INTERIOR

Office of Surface Mining Reclamation and Enforcement

30 CFR Ch. VII

Public Disclosure of Comments Received From Federal Agencies on the Oklahoma Permanent Program

AGENCY: Office of Surface Mining Reclamation and Enforcement (OSM), U.S. Department of the Interior.

ACTION: Disclosure of comments on the Oklahoma Program from Federal Agencies.

SUMMARY: Before the Secretary of the Interior may approve permanent state regulatory programs submitted under Section 503(a) of the Surface Mining Control and Reclamation Act of 1977 (SMCRA), the views of certain federal agencies must be solicited and disclosed. The Secretary has solicited comments from these agencies, and is today announcing their public disclosure.

ADDRESSES: Copies of the comments received are available for public review during business hours at:

Office of Surface Mining Reclamation and Enforcement, Region IV, 5th Floor, Scarritt Building, 818 Grand Ave., Kansas City, Missouri 64106, Telephone: (816) 374-3920.

Office of Surface Mining Reclamation and Enforcement, Room 153, Interior South Building, 1951 Constitution Avenue, NW., Washington, D.C. 20240, Telephone: (202) 343-4728.

Oklahoma Department of Mines, 4040 N. Lincoln, Suite 107, Oklahoma City, Oklahoma 73105, Telephone: (405) 521-3859.

FOR FURTHER INFORMATION CONTACT: Richard D. Rieke, Assistant Regional Director, State and Federal Programs, Office of Surface Mining, Scarritt Building, 818 Grand Ave., Kansas City, Missouri 64106, Telephone: (816) 374-3920.

SUPPLEMENTARY INFORMATION: The Secretary of the Interior is evaluating the permanent regulatory program submitted by Oklahoma for his review on February 28, 1980. See the March 6, 1980, Federal Register (45 FR 14599-14600), April 25, 1980, Federal Register (45 FR 27954, 27955) and the June 18, 1980, Federal Register (45 FR 41158-41160). In accordance with Section 503(b)(1) of SMCRA and 30 CFR 732.13(b)(1), the Oklahoma program may not be approved until the Secretary has solicited and publicly disclosed the views of the Administrator of the Environmental Protection Agency, the Secretary of Agriculture, and the heads of other federal agencies concerned with or having special expertise relevant to the program as proposed. In this regard, the following federal agencies were invited to comment on the Oklahoma program:

Department of the Agriculture:
- Soil Conservation Service
- Forest Service
- Agricultural Stabilization and Conservation Service
- Science and Education Administration

Advisory Council on Historic Preservation

Department of Labor:
- Mine Safety and Health Administration

Environment Protection Agency

Water Resources Council

Department of Energy

Department of the Interior:
- Bureau of Indian Affairs
- Bureau of Land Management
- Bureau of Mines
- Heritage Conservation and Recreation Service
- Water and Power Resources Service
- Fish and Wildlife Service
- National Park Service
- Geological Survey

U.S. Army Corps of Engineers

Of these agencies invited to comment, OSM received comments from the following offices:

Department of the Interior:
- Bureau of Land Management
- Fish and Wildlife Service
- Heritage Conservation and Recreation Service
- Bureau of Mines
- National Park Service
- Water and Power Resources Services
- Geological Survey

Environmental Protection Agency

Department of Energy

Department of Labor
- Mine Safety and Health Administration

These comments are available for review and copying during business hours, at the locations listed above under "Addresses."

Dated: August 11, 1980.

R. Bruce Carroll,

Acting Assistant Director, State and Federal Programs.

[FR Doc. 80-24806 Filed 8-14-80; 8:45 am]

BILLING CODE 4310-05-M

---

30 CFR Ch. VII

Public Disclosure of Comments Received From Federal Agencies on the Iowa Permanent Program

AGENCY: Office of Surface Mining Reclamation and Enforcement (OSM), U.S. Department of the Interior.

ACTION: Disclosure of comments on the Iowa program from Federal agencies.

SUMMARY: Before the Secretary of the Interior may approve permanent state regulatory programs submitted under Section 502(a) of the Surface Mining Control and Reclamation Act of 1977 (SMCRA), the views of certain federal agencies must be solicited and disclosed. The Secretary has solicited comments from these agencies, and is today announcing their public disclosure.

ADDRESSES: Copies of the comments received are available for public review during business hours at:

Office of Surface Mining Reclamation and Enforcement, Region IV, 5th Floor, Scarritt Building, 818 Grand Ave., Kansas City, Missouri 64106, Telephone (816) 374-3920.

Office of Surface Mining Reclamation and Enforcement, Room 153, Interior South Building, 1951 Constitution Avenue, NW., Washington, DC 20240, Telephone (202) 343-4728.

Iowa Department of Soil Conservation, Wallace State Office Building, Des Moines, Iowa 50312.

FOR FURTHER INFORMATION CONTACT: Richard D. Rieke, Assistant Regional Director, State and Federal Programs, Office of Surface Mining, Scarritt Building, 818 Grand Avenue, Kansas City, Missouri 64106, Telephone (816) 374-3920.

SUPPLEMENTARY INFORMATION: The Secretary of the Interior is evaluating the permanent regulatory program submitted by Iowa for his review on February 28, 1980. See the March 6, 1980, Federal Register (45 FR 14598-14599), April 25, 1980, Federal Register (45 FR 27953-27954) and the June 18, 1980, Federal Register (45 FR 41164-41166). In accordance with Section 503(b)(1) of SMCRA and 30 CFR 732.13(b)(1), the Iowa program may not be approved until the Secretary has solicited and publicly disclosed the views of the Administrator of the Environmental Protection Agency, the Secretary of Agriculture, and the heads of other federal agencies concerned with or having special expertise relevant to the program as proposed. In this regard, the following federal agencies were invited to comment on the Iowa program:

Department of Agriculture
- Soil Conservation Service
- Forest Service
- Agricultural Stabilization and Conservation Service
- Science and Education Administration

Advisory Council on Historic Preservation
Department of Labor Mine Safety and Health Administration
Environmental Protection Agency
Water Resources Council
Department of Energy
Department of the Interior
- Bureau of Indian Affairs
- Bureau of Land Management
- Bureau of Mines
- Heritage Conservation and Recreation Service
- Water and Power Resources Service
- Fish and Wildlife Service
- National Park Service
- Geological Survey

U.S. Army Corps of Engineers

Of these agencies invited to comment, OSM received comments from the following offices:

Bureau of Mines
- Soil Conservation Service
- Fish and Wildlife Service
- Heritage Conservation and Recreation Service
- National Park Service

Mine Safety and Health Administration
Geological Survey
Environmental Protection Agency
Iowa State Historical Department
Department of Energy

These comments are available for review and copying during business hours, at the locations listed above under "Addresses."

Dated: August 11, 1980.

R. Bruce Carroll,
Assistant Director State and Federal Programs.

[FR Doc. 80-24835 Filed 8-14-80; 8:45 am]
BILLING CODE 4310-05-M

---

30 CFR Ch. VII

Pennsylvania Permanent Regulatory Program

AGENCY: Office of Surface Mining Reclamation and Enforcement (OSM), U.S. Department of the Interior.

ACTION: Proposed rule; reopening of public comment period.

SUMMARY: OSM announces a public meeting and reopens the public comment period on Pennsylvania's program for fifteen days for comments on the anthracite provision in that program.

DATES: The public meeting discussed below will be held on August 15, 1980, at 11:00 a.m. All comments must be received by 4:00 p.m. on September 2, 1980.

ADDRESSES: Comments should be submitted to Patrick B. Boggs, Regional Director, Region I, Office of Surface Mining, 950 Kanawha Blvd., East Charleston, West Virginia 25301. Copies of the Pennsylvania program are available in the Administrative Record for review and copying during normal business hours at the OSM locations listed below. Copies of the Pennsylvania program are available at Commonwealth of Pennsylvania locations as listed in the July 11, 1980, Federal Register (45 FR 46820-46826).

Office of Surface Mining, Region I, 950 Kanawha Blvd., East Charleston, West Virginia 25301, Telephone: (304) 344-2331.

Office of Surface Mining, Department of the Interior, Room 153, 1951 Constitution Avenue NW., Washington, D.C. 20240, Telephone: (202) 343-4728.

The public meeting discussed below will be held at 11:00 a.m. on July 15, 1980, at the Fulton Bank Building, Tenth Floor, Third and Locust Streets, Harrisburg, Pennsylvania 17120.

FOR FURTHER INFORMATION CONTACT: Mr. Carl C. Close, Assistant Director, State and Federal Programs, Office of Surface Mining, U.S. Department of the Interior, 1951 Constitution Avenue NW., Washington, D.C. 20240 (202) 343-4225.

SUPPLEMENTARY INFORMATION: On Friday, August 15, 1980, at 11:00 a.m., OSM will hold a public meeting on the anthracite provisions of the proposed Pennsylvania permanent regulatory program. The meeting requested by the Commonwealth of Pennsylvania will be attended by Clifford Jones, Secretary, Pennsylvania Department of Environmental Resources, Walter N. Heine, Director, Office of Surface Mining, members of the state legislature, and members of the coal industry. The purpose of the meeting is to discuss the anthracite provisions of the Pennsylvania permanent regulatory program. In accordance with the Department of the Interior's guidelines on ex parte communication (44 FR 54444-54445, September 19, 1979), OSM is announcing the meeting, will place a summary of the meeting in the Administrative Record, and is seeking public comment on the anthracite provisions of the Pennsylvania program. The meeting will take place at 11:00 a.m. on August 15, 1980, in the Fulton Bank Building, Tenth Floor, Third and Locust Streets, Harrisburg, Pennsylvania 17120.

Dated: August 13, 1980.

Carl C. Close,
Assistant Director, State and Federal Programs.

[FR Doc. 80-24949 Filed 8-13-80; 3:13 pm]
BILLING CODE 4310-05-M

ENVIRONMENTAL PROTECTION AGENCY

40 CFR Part 52

[FRL 1571-2]

Approval and Promulgation of State Implementation Plans; Notice of Proposed Revision to the New York State Implementation Plan

AGENCY: Environmental Protection Agency.

ACTION: Proposed rulemaking.

SUMMARY: The purpose of this notice is to discuss in part the results of the Environmental Protection Agency's (EPA's) review of a proposed revision to the New York State Implementation Plan for the Niagara Frontier area (Erie and Niagara Counties) and to invite public comment on EPA's proposed conditional approval. The Clean Air Act, as amended, requires that the State Implementation Plan applicable to an area not in attainment of a national ambient air quality standard be revised by January 1, 1979 to provide for attainment of the standard. The revision received from New York State is intended to meet this requirement with

regard to particulate matter, sulfur dioxide, carbon monoxide, and ozone in designated portions of the Niagara Frontier. Today's action, however, only addresses the revision's approvability with regard to attainment of the particulate matter national ambient air quality standards; on April 29, 1980 (45 FR 28371) a separate rulemaking action was published by EPA in the Federal Register to propose conditional approval of the revision's provisions for attainment of the sulfur dioxide, carbon monoxide, and ozone standards.

DATES: Comments must be submitted on or before October 14, 1980.

ADDRESS: Copies of the SIP revision are available for inspection at the following locations:

Environmental Protection Agency, Region II, Room 908, 26 Federal Plaza, New York, New York 10278.

Environmental Protection Agency, Public Information Reference Unit, 401 M Street, S.W., Washington, D.C. 20460.

New York State Department of Environmental Conservation, 50 Wolf Road, Albany, New York 12233.

Erie County Department of Environment and Planning, 95 Franklin Street, Buffalo, New York 14202.

Niagara County Health Department, 5467 Upper Mountain Road, Lockport, New York 14094.

Erie & Niagara Counties Regional Planning Board, Northtown Plaza, 3103 Sheridan Drive, Amherst, New York 14426.

New York State Department of Environmental Conservation, Region 9, 584 Delaware Avenue, Buffalo, New York 14202.

Copies of the "reasonably available control technology" technical support docket are available for inspection at the Environmental Protection Agency, Public Information Reference Unit and Region II offices, and New York State Department of Environmental Conservation, Region 9 and Division of Air Offices, addresses specified above.

Written comments should be sent to: Charles S. Warren, Regional Administrator, Environmental Protection Agency—Region II, 26 Federal Plaza, New York, New York 10278.

FOR FURTHER INFORMATION CONTACT: William S. Baker, Chief, Air Programs Branch, Environmental Protection Agency—Region II, 26 Federal Plaza, New York, New York 10278, (212) 264-2517.

SUPPLEMENTARY INFORMATION:

I. Introduction

Pursuant to the requirements of Section 107(d) of the Clean Air Act, as amended, the Environmental Protection Agency (EPA) published in the Federal Register (44 FR 5119, January 25, 1979) a list of the attainment status designations with respect to each national ambient air quality standard for every area within New York State. These designations represent revisions, corrections and elaborations to designations originally published in the March 3, 1978 issue of the Federal Register at 43 FR 8962. The reader is referred to the January 25, 1979 Federal Register for a detailed description of the nonattainment designations for the Niagara Frontier. In summary, all or a part of the Niagara Frontier Air Quality Control Region (AQCR) is designated as not meeting national ambient air quality standards for particulate matter (both primary and secondary standards), sulfur dioxide (primary standards only), carbon monoxide, and ozone.

The 1977 Amendments to the Clean Air Act added Part D to Title I of the Act. This new Part requires that for each area within a state designated as not meeting a national ambient air quality standard, a revision to the State Implementation Plan (SIP) must be adopted by the State and submitted for approval to EPA by January 1, 1979. The SIP revision is to provide for attainment of the contravened standard by no later than December 31, 1982 or, or ozone and carbon monoxide, under certain conditions specified by the Act, by no later than December 31, 1987.

The required content of the SIP revisions mandated by the Clean Air Act is described in Part D and, more generally, in Section 110(a) of the Act. These requirements are further discussed and elaborated upon in a "General Preamble for Proposed Rulemaking on Approval of State Implementation Plan Revisions for Nonattainment Areas" published in the April 4, 1979 issue of the Federal Register at 44 FR 20372. The reader is referred to this Federal Register notice for a complete discussion of SIP revision requirements; these are not repeated in great detail in this notice.

The reader is also referred to several supplements to this April 4, 1979 notice which were published in the Federal Registers of July 2, 1979 (44 FR 38583) and November 23, 1979 (44 FR 67182). Among other things, these notices discuss conditional approval of SIPs. EPA proposes to conditionally approve a plan where there are minor deficiencies and a state provides assurances that it will submit corrections by specified deadlines. This notice solicits comment on items to be conditionally approved and on the deadlines for submittal which are specified in this notice. The restrictions on new major stationary source construction, also discussed in a July 2, 1979 Federal Register notive (44 FR 38583 and 44 FR 38471), will not apply where conditional approvals are granted unless a state fails to submit the necessary SIP revisions by the scheduled dates, or unless the revisions are not approved by EPA.

II. Background

In accordance with the provisions of Section 174 of the Clean Air Act, in a March 28, 1978 letter, the Governor of the State of New York designated the Erie & Niagara Counties Regional Planning Board (ENCRPB) as having primary responsibility for preparing the SIP revision for the Niagara Frontier. The ENCRPB then drew up a Memorandum of Understandin which delineated the responsibilities of other state and local governmental agencies that were given specific roles in the development of the SIP. These other governmental agencies are the New York State Department of Environmental Conservation NYSDEC], the New York State Department of Transportation (NYSDOT], the Erie County Department of Environment and Planning (ECDEP), the Niagara County Health Department (NCHD) and the Niagara Frontier Transportation Committee (NFTC). The State itself assumed responsibility for providing technical support to involved agencies, for developing stationary source emission control regulations, for carrying out new source reviews, and for developing other programs encompassing areas beyond the traditional role of local governments.

On May 25, 1979 the Governor of the State of New York formally adopted a SIP revision intended to meet the Clean Air Act's requirements for those portions of the Niagara Frontier designated as not meeting a national ambient air quality standard. The document, which was submitted on May 31, 1979, is entitled, "New York State Air Quality Implementation Plan, Niagara Frontier, Erie and Niagara Counties," May 1979. In addition, on May 23, 1979, June 13, 1979, June 18, 1979, July 25, 1979, August 10, 1979, September 26, 1979, October 1, 1979, November 13, 1979, November 14, 1979, November 27, 1979, January 3, 1980 and May 1, 1980 (2 documents) the State submitted to EPA additional information for inclusion in its SIP revision proposal. Notice of EPA receipt of the proposed SIP revision was announced in the Federal Register on June 28, 1979 at 44 FR 37681.

The proposed SIP revision document submitted by the State addresses attainment of national ambient air quality standards for particular matter, sulfur dioxide, ozone, and carbon monoxide. This notice, however, deals with the SIP revision's approvability with regard to only the particulate matter standards; a separate Federal Register proposal dealing with the SIP's provisions for attainment of the sulfur dioxide, ozone, and carbon monoxide standards was published on April 29, 1980 at 45 FR 28371. The April 29 proposal did not deal with particulate matter because EPA's review of the plan revision had uncovered some apparent discrepancies in the data which had been used in the particulate matter control strategy adequacy demonstration. This data and its effect on the demonstration of attainment of the particulate matter primary national ambient air quality standards were subsequently reevaluated by EPA and the State and the results of this reevaluation are discussed in Section III.B of this notice. Now that this effort is completed, EPA can publish today's notice of proposed rulemaking discussing its findings and proposed action on those aspects of the SIP revision dealing with particulate matter control.

The air quality standard attainment strategies for particulate matter, as contained in the proposed SIP revision for the Niagara Frontier may be summarized as follows:

—The control of by-product coke oven emissions, to be accomplished as a result of compliance with a revised regulation, 6 NYCRR (New York Code of Rules and Regulations) Part 214, By-Product Coke Oven Batteries.

—The control of fugitive and confined emissions from basic oxygen fornaces and blast furnace casting operations, to be accomplished as a result of compliance with a new regulation, 6 NYCRR Part 216, Iron and/Steel Processes.

—The continued enforcement of existing State regulations for the control of particular matter emissions.

—The development and implementation of strategies to control fugitive dust.

It should be noted that the last group of strategies, directed at the control of fugitive dust sources, is not in legally enforceable forms; it is, rather, a program of study culminating at a later time in the development of actual enforceable limitations. The State is committed to enforce these emission limitations so as to provide for attainment of primary air quality standards for particulate matter by December 31, 1982.

III. Plan Content and Review

This section describes the content of the proposed SIP revision for the Niagara Frontier, evaluates it with respect to each of the major criteria used by EPA to determine approvability, and discusses the deficiencies found by EPA through its evaluation and corrective actions which should be undertaken by the State in order to make its SIP revision fully approvable. However, as stated previously, this notice addresses the proposed revision only with regard to its provisions for attainment of the particulate matter standards; it does not deal with its provisions for attainment of sulfur dioxide, carbon monoxide, and ozone standards. These were addressed in a previously published Federal Register notice of proposed rulemaking.

A. SIP revisions shall be adopted by the state after reasonable notice and public hearing

The proposed SIP revision was adopted by the Governor of the State of New York on May 25, 1979 and formally submitted to EPA on May 31, 1979. A public hearing was held, after 30 days of notice, on April 5, 1979 at the Erie County Public Library Auditorium in Buffalo, New York. The State has provided documentation to identify that the necessary notices, public hearings and adoptions were carried out in such a manner as to be found acceptable to EPA.

B. The SIP revisions shall demonstrate that both primary and secondary national ambient air quality standards for particulate matter will be attained within the nonattainment area as expeditiously as practicable, but for primary standards no later than December 31, 1982

1. Primary Standards

EPA's policy with regard to demonstrating attainment of particulate matter primary standards in a non-rural area where fugitive dust causes or contributes to standard violations is discussed in the April 4, 1979 "General Preamble" (44 FR 20372). Two options were available to the State in developing its plan revision:

- to promulgate a collection of legally enforceable strategies providing for attainment of the standards by December 31, 1982, or
- to promulgate "reasonably available control technology" (RACT) requirements on traditional (i.e., non-fugitive dust) sources and to commit to study and develop control requirements for non-traditional sources of particulate matter.

The State has provided a demonstration, based on the results of a diffusion modeling analysis, that the primary standards for particulate matter will be attained by 1982 in those portions of the Niagara Frontier area currently not attaining these standards. Table 1 shows the reductions expected to be achieved as a result of the implementation of specific strategies listed therein. However, without the expected reductions from fugitive dust controls, attainment of the standards is not demonstrated. Since this strategy was not submitted by the State in an enforceable form, such reductions are not assured. Nevertheless, it should be noted that the State has provided adequate commitment to a schedule for study, adoption, and implementation of the non-traditional source measures. Therefore, as detailed in Section III.D of this notice, EPA must review the State's submission on the basis of whether or not the regulations submitted by the State provide for RACT on traditional sources.

Furthermore, EPA found that, while the diffusion model utilized was technically valid, certain discrepancies existed in the attainment demonstration data base. EPA found that the diffusion model was based on emissions inputs which underestimated true emission levels (both "base year" (1975) and "projection year" (1982)) and were overly optimistic in their estimate of emission reductions expected to occur in the future. EPA believes that this resulted from the use of uncertain emission factors and the fact that the State's regulations intended to deal with the existing air quality problem may not, as a result of enforceability problems, be as effective in reducing emissions as the model assumes them to be. However, as illustrated by Table 1, after developing "corrected" model inputs and rerunning the model, EPA found that changing the emission factors used in the analysis would not change the total reduction predicted by the State. Still, ambiguities and other enforceability problems present in the regulatory language have to be corrected to provide for consistency between assumptions made in model inputs and expected emission levels resulting from enforcement of the regulations. EPA's findings in this regard are found in Section III.D of this notice.

Table 1.—*Predicted Effectiveness of Various Control Strategies in Reducing the Annual Geometric Mean Total Suspended Particulate Matter Concentration at the PS-4 Monitoring Location in Lackawanna, N.Y.*[1] *(1975 to 1982)*

Strategy	NYS estimate		EPA estimate	
	Reduction (μg/m³)	Percent	Reduction (μg/m³)	Percent
Control of by-product coke oven emissions (revised Part 214)	24.7	39	26.0	41
Control of Basic oxygen furnaces and blast furnaces (Part 216)	5.1	8	11.2	17
Continued enforcement of existing regulations [2]	3.2	5	2.3	4
Fugitive dust controls (not in regulatory form):				
● Paving and cleaning of private roadways and parking lots	9.6	15	7.6	12
● Cleaning of public streets	3.9	7	3.1	5
● Stockpile controls	15.9	25	12.7	20
● Covers for trucks hauling loose materials	0.8	1	0.6	1
Total	63.2	100	63.5	100

[1] This monitor experienced the highest reading in the Niagara Frontier area (1975 level—142-4 μg/m³).
[2] Includes scheduled phase-out of facilities, reduced automobile emissions and enforcement of process and boiler emission limitations.

2. Secondary Standards

The State has requested an 18-month extension for the submittal of a SIP revision to demonstrate attainment of the secondary standard for particulate matter in the Niagara Frontier area. Section 110(b) of the Clean Air Act provides for such an extension. according to EPA policy (44 FR 20372, April 4, 1979), if a state demonstrates that the installation of reasonably available control technology on traditional stationary sources located in the secondary standard nonattainment area will not be sufficient to bring about attainment, then the state may be granted an extension of up to 18 months to the plan revision submittal date. The proposed SIP revision contains the required analysis and EPA proposes to find it adequate and to approve the request for an 18-month extension, until July 1, 1980, for submittal of the required plan revision. As of the date of publication for this notice, the submittal has not been received.

C. The SIP Revision Shall Require Reasonable Further Progress in the Period Before Attainment, Including Regular, Consistent Reductions Sufficient To Assure Attainment by the Required Date

As regards attainment of the primary ambient air quality standards, the State has presented tables and graphs depicting the change in emissions which will occur over time as the plan is implemented. However, these analyses are predicated on the enforcement of certain regulatory revisions which EPA has found to be deficient (see Section III.D of this notice). Nevertheless, if the conditions on approval proposed in today's notice are met by the State, this will serve to correct these deficiencies and validate the State's analyses. As such, EPA considers the plan to be acceptable in meeting this requirement. Also, since the State has requested, and EPA proposes to approve, an 18-month extension for submission of a plan revision to address attainment of the secondary standard for particulate matter, a reasonable further progress demonstration toward attainment of this standard is not required at this time.

D. The SIP Revision Shall Provide for Implementation of All Reasonably Available Control Measures as Expeditiously as Practicable Insofar as Is Necessary To Assure Reasonable Further Progress and Attainment by the Required Date

This subsection discusses in detail each of the regulations and strategies intended to reduce particulate matter to levels commensurate with the attainment of air quality standards in the Niagara Frontier area. In reviewing the control strategies, EPA has identified several specific problems. These are concerned with enforceability and the requirement to adopt reasonably available control technology.

Enforceability is an important consideration. If emission limitations are not fully enforceable, the emission reductions assumed in demonstrating attainment of national ambient air quality standards may no longer be valid (see Section III.B of this notice) and the proposed SIP revision may no longer be approvable. Deficiencies of this nature are discussed in Sections III.D.1.a(1) and III.D.2.a of this notice.

Additionally, as discussed in the introductory material to Section III.B of this notice, in the absence of enforcable fugitive dust strategies, the State's regulations must provide for the application of reasonably available control technology on stationary sources in order to be approved. EPA has defined RACT as the lowest emisson limitation that a particular source is capable of meeting by the application of control technology that is reasonably available considering technological and economic feasibility. EPA articulated its definition of RACT in a December 9, 1976 memorandum from Roger Strelow, Assistant Adminstrator for Air and Waste Management, to Regional Administrators, Regions I–X, on "Guidance for Determining Acceptability of SIP Regulations in Nonattainment Areas" and in the "Workshop on Requirements for Nonattainment Area Plans—Compilation of Presentations" (OAQPS No. 1.2–103, revised edition April 1978). Therefore, depending on site specific considerations, such as space or other constraints, RACT can differ for similar sources.

EPA believes that the burden of demonstrating that a regulation represents RACT rests with the State. Although EPA has not specified uniform RACT standards for the iron and steel industry, the industry judged to have the most significant impact on particulate matter primary standard nonattainment in the Niagara Frontier, it has collected data which reflects the emission limitations achieved by various iron and steel sources applying control technology. This data is available for review in the rulemaking docket on this notice at the addresses cited under "Address" at the beginning of this notice. Where a state proposes regulations which are not technically supported by EPA's data, the state must submit adequate data supporting its proposal as representing RACT. Such information has not been submitted by New York State. EPA has outlined the RACT related deficiencies in the State's regulations in Sections III.D.1.a(2) and III.D.2.b of this notice.

1. Part 214—By-Product Coke Oven Batteries

Revised 6 NYCRR Part 214, "By-Product Coke Oven Batteries," is intended to regulate emissions of particulate matter from this source. The regulation contains specific particulate matter emission limitations for coke pushing and transport to the quench tower and waste heat stack. It also contains specific limitations on visible emissions from the charging of coal, coke pushing and transport, the waste heat stacks, the oven doors and the topside of the battery.

Along with revised Part 214, New York State has submitted as part of its proposed SIP revision two adminstrative orders entered into by the New York State Department of Environmental

Conservation and the Bethlehem Steel Corporation. The two orders establish compliance schedules for the by-product coke oven batteries at Bethlehem Steel's Lackawanna, New York plant and are intended to bring the facilities into compliance with the revised Part 214 (except to the extent that the orders grant variances from the revised requirements). It should be noted that both Part 214 and the administrative orders serve to revise the compliance deadline incorporated in the currently approved SIP provisions beyond July 1, 1979. EPA has previously expressed, both to the State and to the Bethlehem Steel Corporation, its finding that these orders do not qualify as delayed compliance orders under Section 113(d) of the Clean Air Act. Therefore, as articulated in the Federal Register of April 4, 1979 at 44 FR 20372 (Section II.B.3, pages 20373, 20374), EPA cannot approve such compliance date extensions. Also, as discussed in Subsection III.D.1(b) of this notice, EPA is proposing to disapprove these orders. On this basis, in its enforcement of the SIP, including the collecton of penalties, EPA will not be bound by he consent decree entered into by Bethlehem Steel Corporaton and NYSDEC.

It should be further noted that Part 214, as discussed in today's notice, is a revision to an existing regulation, which is a part of the New York SIP currently in effect. In accordance with EPA's interpretation of the Clean Air Act, as articulated in the April 4, 1979 Federal Register at 44 FR 20372, the control requirements contained in the revised Part 214, not being inconsistent with the presently approved Part 214, do not supersede or replace the requirements of the existing regulation until the affected sources come into compliance with these new requirements. Instead, the existing requirements of Part 214 will remain as an enforceable provision of the SIP and will co-exist with the new requirements. The present emisson control requirements are to be retained in order to ensure that the affected sources do not operate without adequate emission controls while they are moving toward compliance with (or possibly challenging) the new requirements of Part 214. Failure of a source to meet an applicable existing regulatory requirement may result in appropriate enforcement action being taken, including the assessment of noncompliance penalties.

a. Part 214 Deficiencies

(1) Enforceability Issues

(a) Section 214.1, "Compliance"

Section 214.1, "Compliance," requires a source affected by Part 214 to be in compliance with its provisions within 180 days of the regulation's effective date. Alternately, a later date for compliance may be established by an order of the Commissioner of the NYSDEC. It is indicated in the proposed SIP revision that such orders will be necessary with respect to the three companies in New York State which operate by-product coke oven batteries. As indicated earlier, the State has already submitted to EPA administrative orders applicable to one of the companies; no orders applicable to the other two have been submitted as yet.

Because of their effect on the attainment and maintenance of ambient air quality standards, such enforcement orders must be formally submitted and approved as SIP revisions. Therefore, with respect to any future orders, or modifications to existing orders, issued under Section 214.1 of Part 214, EPA will not be bound by any agreement between the source and the State unless the agreements provisions, if otherwise acceptable, are incorporated into the SIP through a formal SIP revision process.

(b) Section 214.2(b), "Coke pushing and transport to quench tower"

Section 214.2(b), "Coke pushing and transport to quench tower," requires the installation of equipment to control emissions from coke pushing and transport operations to a level which represents "best available control technology" (BACT). However, it also provides specific emission limitations which EPA believes do not represent BACT. Therefore, because the reference to BACT conflicts with the emission limits proposed, EPA recommends that the State review its intent in this regard.

Of major concern to EPA with regard to Section 214.2(b) is that it only specifies mass and visible emission limits on the stack discharge from the exhaust system. Since in its regulation the State has failed also to address residual fugitive emissions (leaks from or poor capture efficiency of the exhaust system), EPA believes that the State did not adequately represent the control strategy identified in its SIP revision, which assumes a certain level of emissions capture as well as control of captured emissions. Because of the regulatory structure chosen, it would be advantageous for an affected source to minimize the quantity of captured emissions since the regulatory limitation only applies to these emissions. It is possible that the State intended to associate the BACT requirement with the capture efficiency of the exhaust system. However, in view of the flexibility inherent in an interpretation of BACT, such a requirement is considered neither clear nor enforceable as a means of guaranteeing the necessary emissions capture. This issue, which also impacts on the issue of RACT, is further discussed in Subsection III.D.1.a(2)(b) of this notice.

(c) Section 214.6, "Oven door maintenance"

Section 214.6, "Oven door maintenance," establishes coke oven door maintenance procedures and work practices. However, insofar as EPA interprets the visible emission standard for coke oven doors incorporated in § 214.4(a) as the overriding requirement, the maintenance procedures and work practices contained in § 214.6 are considered only as secondary considerations. Compliance with a coke oven door maintenance provisions of § 214.6 shall not be construed to alleviate the requirement for compliance with a visible emissions standard of § 214.4(a). EPA intends to apply this interpretation unless otherwise advised by the State during the comment period. If the State indicates that this interpretation is erroneous, EPA may have to reevaluate the basis for its proposed conditional approval.

(d) Section 214.8, "Inspection Methods"

Section 214.8, "Inspection Methods," describes the methods and procedures to be used to determine compliance with the visible emission limitations in Part 214.

- Section 214.8(a) presents a method for determining compliance with the visible emission standard of § 214.2(a), related to emissions from charging operations. EPA considers that this method is not defined in a sufficient manner. The method does not address the procedure for dealing with an obscured charge or other interruptions to the observations being made of a series of charges. For example, it is necessary to clarify whether an inspector may use readings taken before and after the obscured charge or other interruption, if such readings are otherwise consecutive. In this regard, EPA proposes to condition its approval of this SIP revision on State adoption of an acceptable inspection method to include a procedure for data aggregation and reduction of discontinuous visible emission observations made of coke oven charging operations. The State must adopt and submit these revisions to EPA by January 1, 1981.
- In addition, it is not clear to EPA how the visible emission standard inspection procedures described in § 214.8(a) should be applied to dry coal charging systems. Nevertheless, the State has indicated that its intent is to apply the standard in § 214.2(a) to dry coal-charged batteries. Therefore, in

enforcing the SIP with regard to this provision as it apples to conveyor type dry coal charging systems, EPA will read visible emissions only from the charging holes, offtake piping, charging buggy, drop sleeves, the interface between the charging buggy and the conveyor, the conveyor system, and any other equipment associated with the charging operation subsequent to the coal feed to the conveyor. Further, EPA intends to follow this procedure whether the conveyor system is charging the battery with wet or dry coal.

• Section 214.8(e) provides a method for determining compliance with the opacity standard of § 214.3(b) for the waste heat stack emissions. EPA considers that this method is inadequately defined in that it does not specify the procedure for aggregation and reduction of recorded values. An acceptable data reduction must be consistent with the aggregate three minute exception in the regulation. In this regard, EPA proposed to condition its approval of this SIP revision on the adoption of revisions fully describing the procedures comprising the test method. The State must adopt and submit these revisions to EPA by January 1, 1981.

(e) Section 214.9, "Exemptions"

Section 214.9, "Exemptions," provides for variances from the generally applicable emission limitations of Part 214. These variances may be granted for any one of three reasons, none of which are air quality related. However, with respect to any variances issues under § 214.9 of Part 214, EPA will not view an agreement between the source and the State as altering the SIP unless the agreement's provisions are incorporated into the SIP through a formal SIP revision process. Such a revision, in order to be approved by EPA, must consider air quality impacts.

(f) Section 214.10, "Definitions"

The definition of the end of pushing and the beginning of transport, found in § 214.10 (b) and (c) respectively, refer to the point in time when the ram begins to retract. EPA notes that a visible emissions observer frequently may not be able to observe the ram itself on batteries equipped with pushing emission controls. To the extent that it is necessary to determine this point in time, EPA, in its enforcement of the SIP, will consider the pushing period to end and the transport period to begin when the quench car begins to move, unless otherwise advised by the State during the comment period. If the State indicates that this interpretation is erroneous, EPA may have to reevaluate the basis for its proposed conditional approval.

(g) Mass Emissions Testing Methods

Part 214 contains no procedures for determining compliance with its particulate matter mass emission standards. The State has indicated that these are included in 6 NYCRR Part 202, "Emissions Testing, Sampling and Anayltical Determinations," but the procedures referenced therein are general in nature and do not specify necessary adaptations for testing coke making processes. Information regarding testing coke making sources may be found in the rulemaking docket. Consequently, EPA proposes to condition its approval of this SIP revision on State adoption of adequate test procedures. The State must adopt and submit to EPA acceptable test procedures by January 1, 1981.

(2) RACT Issues

(a) Section 214.2(a), "Charging"

Section 214.2(a), "Charging" requires visible emissions from charging coal to coke ovens to be limited to a total of 150 seconds of visible emissions of any opacity for five consecutive charges. In addition, the inspection procedure set forth in Section 214.8(a) would allow the reading from one charge in a set of twenty to be discarded. EPA has reviewed charging emissions data gathered at a number of batteries over several years and has concluded that a limitation of 20 to 25 sec of any visible emission per charge averaged over four to seven charges is technology that is reasonably available. Supporting data for this determination may be found in the rulemaking docket. In this regard, EPA proposes to condition its approval of this SIP revision on State adoption of an acceptable visible emissions standard for coke oven charging operations. The State must adopt and submit these revisions to EPA by January 1, 1981.

(b) Section 214.2(b), "Coke pushing and transport to quench tower"

As discussed in Section III.D.1.a(1)(b) of this notice, capture of pushing emissions by the required control equipment is essential to the effectiveness of the State's control strategy. This regulation does not provide adequate assurance that residual fugitive emissions will be captured. Equipment presently available to control coke pushing emissions is capable of capturing a high percentage of these emissions. EPA has concluded after reviewing visible emissions data gathered on pushing emission controls that a high degree of capture is reasonably achievable and will be provided for if one of the following fugitive emissions opacity standards is met:

—Ninety percent of the opacity observations taken at 15-second intervals are less than 20% opacity. This can be averaged over some number of consecutive pushes, e.g., four to six.

—The cumulative time that visible emissions exceed 20% opacity per push is less than six seconds, measured by a stopwatch. This can be averaged over some number of consecutive pushes e.g., four to six.

Supporting data for this determination may be found in the rulemaking docket.

Therefore, EPA proposes to condition its approval of this SIP revision on State adoption of an acceptable fugitive emissions opacity standard, including applicable inspection methods, for coke oven batteries during pushing and transport operations. The State must adopt and submit this revision to EPA by January 1, 1981.

Further, EPA finds that the mass emission limitations for coke pushing expressed in § 214.2(b) are RACT for pushing controls currently available, except sheds. The emission limitations expressed in the state's regulation are not appropriate for pushing emission control sheds because sheds typically operate continuously and at much higher gas flow rates than mobile scrubber cars or hoods with land-based controls, EPA has determined that a standard consistent with reasonably available shed technology is 0.10 lb/ton of coke pushed. Supporting data for this determination may be found in the rulemaking docket. EPA notes that no coke plant operator has yet proposed to install a cokeside shed in the Niagara Frontier. However, for a variety of technological and economic factors, sheds appear to be reemerging as a favorable control technology choice. Therefore, EPA is proposing to condition its approval of this SIP revision on State adoption of an emission limitation specific to pushing emission control shed exhausts. The State must adopt and submit this revision to EPA by January 1, 1981.

(c) Section 214.3(a), "Wet quench tower"

Section 214.3(a), "Wet quench tower," requires the installation of baffles on all wet quench towers and the use of makeup water meeting standards for total dissolved solids and total suspended solids which remain to be specified. EPA has determined that there is a linear relationship between the quality of water used to quench incandescent coke and the quantity of emissions generated by the coking process. EPA has reviewed data available to it on the use of clean quench

water and believes that limiting actual quench water to a maximum of 1300 mg/l total dissolved solids (TDS) or limiting quench tower sump make-up water to about 750 mg/1 TDS is reasonably available control technology. EPA also notes that the State might have chosen to regulate quench tower emissions by setting a mass emission standard applicable to such emissions. However, emission tests on such sources are difficult to perform due to source configuration. Nevertheless, such an approach would also be acceptable provided specific test procedures, applicable to each individual source of this type in the State, were developed also. Based on a review of available data; EPA believes that a standard of 0.6 to 0.75 lb/ton of coke would be consistent with reasonably available quench tower emissions control technology. Supporting data for this determination may be found in the rulemaking docket. Therefore, EPA is proposing to condition its approval of the proposed revision on adoption of an acceptable limitation on the quality of water used for quenching of coke or mass emission standard applicable to quench tower emissions which must include specific test procedures applicable to each individual source of this type in the State. The State must adopt and submit this revision to EPA on or before January 1, 1981.

(d) Section 214.8, "Inspection Methods"

Sections 214.8(c) and (d) provided methods for determining compliance with the visible emission standards of § 214.4(a) and (b), respectively, regarding emissions from coke oven doors, charging hole lids and battery offtake piping. These methods provide for determining the percentage of leaks based on the total number of doors, lids, or offtakes on the battery. However, EPA believes that the allowable leakage rates for doors, lids and offtakes can only be considered RACT when the compliance calculation is based upon the total doors, lids or offtakes associated with operating ovens and not the total doors, lids or offtakes on the battery irrespective of oven operational status. Therefore, EPA proposes to condition its approval of this SIP revision on State adoption of inspection methods which include only operating ovens in determining compliance with visible emission standards for coke oven doors, charging hole lids and battery offtake piping emissions. The State must adopt and submit these revisions to EPA by January 1, 1981.

b. Administrative Orders Issued to Bethlehem Steel

As mentioned earlier, the proposed SIP revision contains two administrative orders entered into by the NYSDEC and the Bethlehem Steel Corporation. One addresses coke oven batteries 3, 4, 5, 6, 7, and 8 and the other addresses coke oven battery 9. In its review of these orders, EPA found that they suffer from the same deficiencies as noted in Part 214. In view of the numerous deficiencies, the orders, as well as the regulation, will have to undergo extensive revision. Rather than restate the deficiencies recurring in the orders, the reader is referred to Section III.D.1 of this notice. Because of these deficiencies, EPA proposes to disapprove these orders as part of the SIP. EPA disapproval would have the effect of not incorporating the orders into the provisions of the SIP but would not result in application of the Clean Air Act funding or growth limitations, insofar as the plan revision is found consistent with Part D requirements. The State is, nevertheless, encouraged to develop suitable timetables for compliance with Part 214, as revised in response to EPA's final rulemaking, for the Bethlehem Steel Corporation and resubmit these for EPA approval as SIP revisions.

EPA also notes that the orders contain the following additional problems, beyond those duplicated from the regulation, which must be corrected prior to resubmission to EPA for approval:

(1) Issues Concerning Both Orders

• Both orders contain a paragraph c.X.C indicating that, if provisions of the orders are violated as a result of "equipment malfunction, maintenance, repair or the start-up, alteration or shut-down of process operations and air cleaning devices," the State will utilize enforcement discretion "consistent with its policy." The paragraphs refer to unarticulated State policy which has not been submitted as part of any SIP revision proposal. EPA cannot approve provisions based on unwritten State policy.

• Both orders contain an Attachment C, "Procedures for Observations of Visible Emissions from Coke Ovens." Its provisions vary from those of Part 214 as follows:

—Paragraph (2), "Pushing Emission Control Systems, Coke Oven Transport Emissions and Underfire Stacks," provides for the use of EPA Reference Method 9 to determine compliance of underfire, i.e., waste heat, stacks with the visible emission standard. Since the standard contains an aggregate three minutes exception and Method 9 provides for data reduction on the basis of six minute averages, this method is inappropriate.

—Paragraph (3), "Doors," requires a single observer to apply the test procedure identified. Since it would require an individual to observe both sides of the battery during the same time interval, this requirement is inappropriate.

(2) Issues Concerning The Order Addressing Coke Oven Battery 9 Only

• Paragraphs c.III.B.7 and c.V.A.5 do not provide a final date by which emissions from coke oven doors and offtake piping must achieve compliance with applicable visible emission limitations of Part 214. Since one objective of the SIP is attainment of the primary particulate matter ambient standard by December 31, 1982, a final compliance date, consistent with the SIP control strategy time frame, is necessary for approvability as a SIP revision.

• Paragraphs c.I.C, c.I.D, c.II.E, and c.V.C provide a variance mechanism for relaxing visible emission standards applicable to charging, pushing and offtake piping emissions points after air pollution control equipment is installed and operating. Such "discretionary authority" cannot be approved as a SIP revision; however, the State can submit such variances, on a case-by-case basis, for EPA approval as SIP revisions.

• Paragraph c.III.B does not require compliance with the standard for door leaks and paragraph c.V.A.5 does not require compliance with the limitation on battery offtake piping visible emissions, contained in Part 214. Any such variance must be accompanied by an impact analysis in order to be approvable as a SIP revision. Further, since EPA does not regard the limitations for doors and offtake piping contained in the administrative order to be consistent with RACT, a justification for the variances, based on distinctive factors affecting the RACT determination for these sources, would also have to be submitted in order for EPA to approve this revision.

2. Part 216—Iron and/or Steel Processes

6 NYCRR Part 216, "Iron and/or Steel Processes," establishes particulate matter mass and visible emission limitations for iron and steel processes, including those involving blast furnaces, basic oxygen furnaces, and electric arc furnaces. The following is a discussion of the deficiencies EPA found with this regulation during its review of the proposed SIP revision.

a. Enforceability Issues

(1) Section 216.1, "Particulate emissions"

• Section 216.1, "Particulate emissions," requires blast furnaces and basic oxygen furnaces to be in compliance with their respective particulate matter mass emission limitation within 180 days of the regulation's effective date. Alternately, a later date for compliance may be established by an order of the Commissioner of the NYSDEC.

Because of their effect on the attainment and maintenance of ambient air quality standards, such enforcement orders must be formally submitted and approved as SIP revisions. Therefore, with respect to any future orders issued under Section 216.1(c) of Part 216, EPA will not be bound by any agreement between the source and the State unless the agreement's provisions, if otherwise acceptable, are incorporated into the SIP through a formal SIP revision process.

• Sections 216.1(a) and 216.1(b) set particulate emission standards for "confined" iron and/or steel processes on the date when an application for a permit to construct was recevied by the Commissioner of the NYSDEC. These paragraphs provide for allowable particulate emissions of 0.15 gr/dscf and 0.050 gr/dscf, respectively. Under § 216.(b) a source owner would be subject to the more stringent emission standard if ". . . an application for a Permit to Construct was received by the Commissioner after July 1, 1973 * * *." These provisions represent the emission limits previously applicable, under Part 212, to all iron and steel process sources which were not subject to process weight based emission limitations. (Note.—Prior to adoption of Part 216, the State had regulated emissions from these sources under Part 212, "Process and Exhaust and/or Ventilation Systems," a general process source regulation.) It is EPA's understanding that the State interprets these provisions to be based on the date that the latest permit to construct application was submitted, including applications for permits to install or modify control equipment. EPA will apply this same interpretation in its enforcement of the SIP, unless otherwise advised by State during the comment period. If the State indicates that this interpretation is erroneous, EPA may have to reevaluate the basis for its approved conditional approval.

As previously mentioned, prior to the adoption of Part 216, the State had regulated blast furnace casthouse emissions and basic oxygen furnace (BOF) primary stack emissions and secondary fugitive emissions under existing Part 212. In promulgating a separate Part 216 for the iron and steel industry, EPA believes that the State's intent was to transfer existing emission limitations applicable to such sources into a separate specific regulation, which would represent the control requirements reflected in the SIP's control strategy.

Section 216.1(c) is intended to establish control requirements for fugitive emissions from blast furnace casthouses and primary and secondary (fugitive emissions from basic oxygen furnaces. However, by specifying the limitation as a maximum concentration permitted at the outlet of the control equipment and not including a requirement related to the capture efficiency of the exhaust system, the State has not conformed the regulation to the control strategy identified in the SIP revision document. This deficiency is further exacerbated by the absence in Section 216.2 of a visible emission limitation on residual fugitive emissions and provisions, in Sections 216.2(c), for "equivalent opacity limitations." Because of this regulatory structure, it would be advantageous for an affected source to minimize the quantity of emissions captured by the emissions control system.

Section 212.7, "Opacity of emissions limited," provides a firm limitation an opacity of emissions from regulated sources. However, under Part 216, blast furnace casthouse and basic oxygen furnace shop emissions are not subject to a firm opacity standard but, rather, are addressed on the basis of an equivalent opacity, to be assigned by the State at the time compliance with mass emission standards is demonstrated.

The State's procedure for assigning equivalent opacities remains unarticulated beyond its definition of equivalent opacity in Section 200.1(v) EPA is concerned that a procedure which allows the assignment of equivalent opacities may result in costly, time consuming retesting efforts each time a violation of the opacity standard is documented. EPA believes that the procedure for assigning equivalent opacities should establish performance requirements which, if not met, would be considered a violation of regulatory requirements. In any case, any "equivalent opacity" assignments, in order to be recognized by EPA, must be submitted and approved as SIP revisions.

Further, with regard to basic oxygen furnaces shops, the State has chosen to implement a strategy, defined as "Strategy 19," specifically calling for the installation of "additional fixed or moveable hoods" to control BOF fugitive emissions resulting from the lancing (oxygen blow), tapping, and fluxing operations. It is EPA's understanding that, although § 216.1(c) does not specifically refer to either fugitive or stack emissions, the State's intention was to regulate primary stack emissions during all parts of the BOF process cycle and regulate fugitive emissions generated only by the lancing, tapping and fluxing operations. Additionally, other operations which occur in the BOF shop building and give rise to fugitive emissions, such as hot metal and scrap charging, teeming, hot metal transfer, reladling, steel ladle alloying and deskulling, are not intended to be controlled under § 216.1(c) except to the extent that such emissions may inadvertently be partially captured by either the BOF vessel(s) primary Hood(s) or any secondary emissions control system installed for the purpose of controlling fugitive emissions due to lancing, tapping and fluxing.

EPA believes that, the State's intent notwithstanding, the language of § 216.1(c) fails to require owners or operators of BOFs to carry out Strategy 19. That is, the regulation could, under some interpretations, be complied with by operating the primary hood and capturing any small fraction of emissions resulting from lancing, tapping and fluxing. Under such an interpretation, Section 216.1(c) does not require any "additional fixed or moveable hoods" to be constructed to operated to contain such emissions. EPA believes that such additional hooding is necessary to provide significant capture of fugitive emissions from BOF operations and thus be consistent with "Strategy 19," regardless of whether the captured emissions are sent to the primary control device or to a separate secondary one. Of even more concern is the possibility that the language in § 216.1(c) allows a source operator to be in compliance and avoid any additional control of emissions by showing that his uncontrolled roof monitor emissions meet the 0.050 gr/dscf limit. Such an interpretation is inconsistent with "Strategy 19" since application of the standard roof monitor emissions would permit emissions which the strategy purports to control. Further, direct measurement of roof monitor emissions and gas flows is an extremely complex undertaking which is subject to considerable speculation as to its accuracy and precision. EPA has promulgated a method for sampling roof monitor emissions from primary aluminum plant pot rooms subject to new source performance standards, Reference Method 14, 40 CFR Part 60, Appendix A. However, this method

requires the enclosure of the roof monitor, ducting its emissions to the atmosphere, and sampling in the duct by normal stationary source techniques with better defined error limits than methods used for direct measurement of roof monitor emissions. Generally, the enclosure of BOF roof monitors is a substantial undertaking which may be considered as part of a permanent control option but is not favored as a temporary measure to facilitate testing. The principal point, though, is that application of the 0.05 gr/dscf standard to roof monitor, as well as stack emissions is inconsistent with the State's control strategy for BOF shops.

These issues, which also impact on the RACT determination, are further discussed in Subsection III.D.2.b(1) and III.D.2.b(2) of this notice.

(2) Mass Emissions Testing Methods.

Part 216 contains no procedures for determining compliance with its particulate matter mass emission standards. The State has indicated that these are included in 6 NYCRR Part 202, "Emissions Testing, Sampling and Analytical Determinations," but the procedures referenced therein are not specific to iron or steel proceses. It is specifically noted that the mass emission limitation for particulate matter, incorporated in Section 216.1(c), is not clear as to the time period over which compliance will be determined. EPA interprets that the standard intends to require compliance at any time during which any of the operations listed (lancing, tapping, or fluxing) is in progress. Further, to clarify this requirement, EPA recommends that the State provide a definition of lancing, tapping, and fluxing. EPA, therefore, proposes to condition its approval of this SIP revision on State adoption of adequate test procedures. The State must submit to EPA acceptable test procedures by January 1, 1981.

b. RACT Issues

As discussed in Subsection III.D.2.a(1) of this notice, capture of fugitive emissions from blast furnace casthouses and BOF operations is essential to the effectiveness of the State's control strategy for these sources.

(1) Blast Furnace Casthouse Emissions

EPA believes that RACT for blast furnace casthouses must reflect a high emissions capture rate. EPA does not believe that Section 216.1(c) requires the application of RACT because, in its present form, it fails to ensure adequate emission capture.

Under provisions of Part 216, the State is requiring the installation of an exhaust system to "capture and contain" emissions from the iron notch and trough area; requiring the collected emissions to be cleaned to an allowable outlet grain loading of 0.010 gr/dscf; and establishing an equivalent opacity for systems tested and found in compliance with the mass standard. EPA interprets the term "exhaust system" to mean, at a minimum, a local or canopy hood which is mechanically evacuated, and is situated and operated so as to capture emissions from the trough and notch during every cast at a given furnace.

EPA recognizes that this regulatory approach would be consistent with RACT if adequate capture of emissions were ensured in practice. The outlet grain loading limitation of 0.010 gr/dscf does represent reasonably available control technology, based on data which is available in the rulemaking docket. However, whether a resulting control system, under the State's approach, will represent RACT would depend upon its initial and continued performance, i.e., upon the casthouse roof monitor opacity levels staying within the demonstrated capacity of the taphole system.

Several factors are critical in determining whether the State's regulatory strategy will provide for RACT control. For each individual blast furnace, the installed system must provide adequate draft to capture emissions but not excessive draft which draws in dilution air. This will be influenced by such factors as hood location and the occurrence of cross drafts. EPA believes that the State's regulation must provide for capture but not excessive draft. Adequate capture, consistent with RACT performance, may require building repairs or modifications to prevent cross-drafts from interfering with emissions capture, the enclosing of building open spaces, and the installation of partitions or air curtains within the casthouse. Further, capture performance is not time-limited. The evacuation system should be capable of operating at capacity throughout the cast. RACT level control includes capture of casthouse fugitive fume during all casts at any individual furnace. Control device sharing by more than one blast furnace is not RACT if uncontrolled casts would occur when more than one blast furnace is casting because the control device cannot handle all of the casting emissions simultaneously.

EPA, therefore, proposes to condition its approval of this SIP revision on State adoption of regulatory revisions to provide either a limitation on casthouse fugitive emissions opacity or performance criteria for proposed control system approval, including the extent and duration of emissions capture. The State must adopt and submit this revision to EPA by January 1, 1981.

Incorporating of control system performance criteria into the SIP, however, will not serve as approval of any specific control proposal for an individual furnace. All equivalent opacities assigned under Part 216 must be submitted as SIP revisions.

(2) Basic Oxygen Furnace Emissions

Beyond the factors discussed in Subsection III.D.2.a(1) of this notice, EPA believes that the State had not adequately provided for RACT on basic oxygen furnace emissions because it did not regulate emissions generated by other operations in the process cycle, e.g., charging.

Hot metal charging is a large source of particulate matter emissions. Since this operation occurs with the vessel in the turned down position, most of the emissions generated escape primary hood capture and may be emitted through the roof monitor. In developing its control strategy, the State determined that technology for controlling charging emissions was insufficiently demonstrated to be required of BOF operators. The State, however, provided that the BOF operators in the region would have to commence operation of charging emission controls after April 1, 1982, "if necessary and reasonably available."

Although the State claims technology doesn't exist or is not demonstrated for control of charging emissions, it did not submit any documentation for this assertion. EPA considers the State's conclusion to be incorrect. EPA considers technology to control charging emissions, either separately or in combination with other BOF fugitive emissions, to be demonstrated and reasonably available. Data illustrating the performance of BOF fugitive emissions control systems which control charging emissions is included in the rulemaking docket.

In addition, EPA believes that the State's failure to provide § 216.1(c) for the control of all fugitive emissions resulting from operation of the BOF vessel represents a relaxation of the control requirements for these emissions from previous requirements under Part 212.

All of the problems relating to the capture and control of emissions from BOF operation are compounded by the absence of a limitation in § 216.2 on the opacity of emissions from the BOF shop, as previously discussed (See Subsection III.D.2.a(1)). Under the State's construction, § 216.1(c) limits particulate mass emissions from basic oxygen furnace lancing, tapping and fluxing and §216.2(c) provides for the

assignment of equivalent opacities to sources in compliance with requirements of § 216.1(c). As discussed in section III.D.2.a(1) of this notice, the procedure set forth by §§ 216.1(c) and 216.2(c) would conceivably encourage a source to minimize its capture of emissions.

EPA has reviewed visible emissions data from BOF shops with fugitive emissions control and has concluded that reasonably available control technology will be achieved if one of the following fugitive emission opacity standards is met:

—Visibe emissions are less than 20 to 30 percent opacity, except for a cumulative period not to exceed three minutes per consecutive sixty minutes. Readings would be taken at 15-second intervals and those readings exceeding the standard would be totaled to determine if the 3 minute exception has been exceeded.

—Visible emissions are less than 20 to 30 percent opacity, calculated on a moving two or three minute average basis. Readings would be taken at 15-second intervals.

Supporting data for this determination may be found in the rulemaking document.

Furthermore, for those emissions that would be captured and exhausted through a gas cleaner under the provisions of Part 216, as written, EPA does not believe that the outlet allowable concentration of 0.050 gr/dscf represents the performance of reasonably available control technology. (Note: As a related issue, EPA finds it unclear from the language in § 216.1(c) whether the concentration standard applies, in some flow-weighted senses to overall lancing, tapping, and fluxing emissions, or to the emissions of each operation separately—see discussion in Subsection III.D.2.a(2)). EPA has reviewed data from BOF shops, with and without fugitive emissions controls, and has concluded that reasonably available primary emissions control devices on BOF vessels can produce outlet grain loadings of 0.030 gr/dscf. Support for this conclusion includes test data from one of the two BOF shops in the Niagara Frontier. Separate secondary or fugitive emissions control systems retrofitted to existing furnaces can perform to a level of 0.010 gr/dscf. Data to support these figures may be found in the rulemaking docket.

Therefore, EPA is proposing to condition its approval of this SIP revision on State adoption of regulatory revisions to include the following:

- Capture and cleaning of BOF fugitive emissions from all operations including charging emissions.
- Installation of control equipment to capture and clean all BOF fugitive emissions from all opertions including charging emission.
- Mass emission standards for primary and secondary control devices which represent reasonably available control technology application.
- Visible emissions limitations reflecting reasonably available control technology application.

The State must submit these revisions to EPA by January 1, 1981.

(3) Sinter Plant Windbox and Discharge End Mass Emissions

The State's regulation for iron and steel processes, Part 216, does not include specific standards for sinter plants. Therefore, sinter plant emissions would be regulated under the general emission limits of Sections 216.1(a) and (b). These paragraphs provide for allowable particulate emissions of 0.15 gr/dscf and 0.050 gr/dscf, respectively.

EPA does not believe that the State's provisions for limiting emissions from sintering windboxes and discharge ends represent RACT. EPA has reviewed test data available to it for these emissions resources and has concluded that the following emission limits are achievable through the use of reasonably available control technology:

—0.02 to 0.035 gr/dscf from the outlet of the control device on the sinter plant windbox emissions.

—0.01 to 0.02 gr/dscf from the outlet of the control device on the sinter plant discharge end emission.

Supporting date for this determination may be found in the rulemaking document.

Therefore, EPA is conditioning its approval of this SIP revision on State adoption and submittal of revised mass emission limitations, representing RACT, for these emission sources, by January 1, 1981.

(4) Hot Automatic Scarfing—Mass Emissions.

Emissions from automatic scarfing machines are not specifically limited under the State's regulation for iron and steel processes, Part 216. Therefore, as with sintering emission, discussed above, emissions from automatic scarfers would be regulated under the general standards set forth in Section 216.1(a) and (b), 0.15 gr/dscf and 0.050 gr/dscf, respectively. The State's SIP projects, for 1982, the operation of three scarfing machines in the nonattainment area, two at Bethlehem Steel and one at Republic Steel, Under the State's proposed SIP regulations, the scarfers at Bethlehem Steel would be allowed to emit 0.15 gr/dscf and the one at Republic Steel 0.050 gr/dscf.

EPA has examined the scarfing emissions test data available to it and has concluded that the State's submittal does not provide for the application of RACT on scarfing machines. EPA believes that a standard of 0.022 gr/dscf, measured only during the scarfing operation, or a standard of 0.005 gr/dscf, continuously measured, is achievable through the use of reasonably available control technology. Support data for this determination may be found in the rulemaking document. Therefore, EPA is conditioning its approval of this SIP revision on State Adoption and submittal of a revised mass emissions limitation, representing RACT, for these emissions sources, by January 1, 1981.

(5) Electric Arc Furnaces

It is EPA's understanding that there are no steel industry electric arc furnaces with any substantial impact on the primary nonattainment area. Therefore, EPA is not addressing the question of whether mass emission and opacity limits in Part 216 are RACT for electric arc furnaces. This should not be construed as providing approval of Part 216 provisions with respect to RACT for electric arc furnace emission control systems.

3. Part 200—General Provisions

6 NYCRR Part 200, "General Provisions," contains definitions of the terms used in State regulations, including definition of "by-product coke oven battery" and "iron and/or steel processes." Such sources are affected by the requirements of 6 NYCRR Parts 214 and 216. A clear definition of the affected source is central to the enforceability of any regulation. As discussed in this subsection, EPA has determined that the definitions of "by-product coke oven battery" and "iron and/or steel processes" are deficient.

- Section 200.1(j), "By-product coke oven battery," provides a general designation of the equipment comprising the coke manufacturing process. In order to clarify what occurs in the process, the present definition must include a reference to the destructive distillation of coal and separation of gaseous and liquid distillates from the carbon residue or coke. To clarify which operations and equipment are covered under this definition, the following activities and equipment should specifically be mentioned: coal handling and preparation, hot coke transfer separation and cleaning of distillates, coal preheaters, fuels, and operating equipment including jumper pipes, pushing machines, door machines,

mud trucks and quench cars. Further, it should be noted that EPA interprets the reference to control equipment to include oven patching equipment, door hoods, sheds and other hoods, either movable or stationary and with or without water sprays. The definition should be modified to include these systems. Also, because there may still be confusion regarding battery identification, particularly if two batteries share a common charging system, the definition must be sensitive to this issue. For example it could include a list of all existing batteries, including identification of the operator, plant, and other pertinent information.

• Section 200.1(dd), "Iron and/or steel processes," provides a list of processes commonly associated with or necessary to the production of iron or steel. However, item 3, "Sintering processes exluding iron-ore beneficiating processes," must be clarified. Because iron-ore beneficiating covers a wide variety of operations which may occur at any point between the mine mouth and the blast furnace, this term must be narrowed to include (and, therefore, exclude from the definition of "iron and/or steel processes") only operations occurring prior to iron-ore agglomeration, such as washing, screening, crushing, blending, and materials handling. Operations such as agglomeration, including sintering, and handling of agglomerated materials, should be included in the definition of "iron and/or steel processes."

EPA proposes to condition its approval of this SIP revision on State adoption of an acceptable definition of "by-product coke oven batteries" and clarification to the exclusion of iron-ore beneficiating processes. The State must adopt and submit these revisions to EPA by January 1, 1981.

4. Part 212—Processes and Exhaust and/or Ventilation Systems

Part 212, "Processes and Exhaust and/or Ventilation Systems," contains general limits applicable to process sources for which there are not specific regulations. When revisions to existing regulations or new regulations are promulgated to cover specific processes previously covered by Part 212, it is therefore necessary for the State to amend this Part by exempting those processes covered by the revised or new specific regulation. Such a step was taken with regard to the sources addressed by the regulations discussed in this notice.

However, in its review of the State's SIP revision submittal, EPA noted that Part 212 had been revised to a greater extent than indicated by the State. This apparent discrepancy results from the fact that Part 212 had been previously revised by the State without incorporation of these revisions into the SIP. Therefore, EPA and the State currently are enforcing different versions of Part 212. While, in order to correct this situation, the State has recently submitted as a SIP revision this regulation in its entirety, only those revisions to Part 212 exempting those processes covered by revised or new regulations are being addressed by EPA in this notice. EPA proposes to find these specific revisions to Part 212 acceptable.

5. Control of Fugitive Dust Emissions

The State has submitted a plan of study and commitment to implement fugitive dust controls. The following four control strategies are addressed in a generic fashion in the SIP revision:

—Paving and Cleaning of Private Roadways and Parking Lots
—Cleaning of Public Streets
—Stockpile Controls
—Covers for Trucks Hauling Loose Materials

The State's primary standard attainment demonstration is generally premised on an 85% reduction in fugitive dust emissions. Included is a commitment to implement fugitive dust strategies (not necessarily those evaluated in the SIP revision submittal) providing this level of control. EPA policy states that, in the case of fugitive dust (non-traditional source) controls, submission of a schedule for further study resulting in development of enforceable requirements is acceptable for approval (44 FR 20372, April 4, 1979), as long as traditional (i.s., stationary) sources are subject to RACT requirements. The conditions proposed in Sections III.D.1, 1, and 3 of this notice are directed at this issue.

E. The SIP Revisions Shall Include an Accurate, Current Inventory of Emissions That Have an Impact on the Nonattainment Area, and Provide for Annual Updates To Indicate Emissions Growth and Progress in Reducing Emissions From Existing Sources

1. General

The emissions inventory data contained in the proposed SIP revision for the Niagara Frontier area is not broken down in sufficient detail to satisfy EPA requirements. Such a breakdown is necessary in order for the impact of control strategy implementation to become readily apparent. However, throughout the proposed SIP revision, the State has committed itself to inventory improvements. Consequently, EPA proposes to approve the proposed SIP revision on the condition that by July 1, 1981 the State submit to EPA additional emission inventory data for the baseline year and projected attainment year in a format equivalent to that presented in the EPA document, *Workshop on Requirements for Nonattainment Area Plans*, April 1978.

The proposed SIP revision contains a list of point sources along with their current and projected future emissions. Area source emissions are also summarized by major source category and growth factors are identified; in general, minimal area source growth is projected. Although a number of discrepancies in the particulate matter inventories were identified by EPA in its review of the plan, they were found not to have any effect on the attainment demonstration (see Section III.B of this notice for a further discussion of this issue). Therefore, in view of the State's commitment to improve the data base, EPA proposes to find these inventories acceptable. However, the State should not lose sight of the need for continued attention to inventory improvement, especially for the steel manufacturing category.

2. Annual Reporting

The State has agreed to provide annual reports to EPA on progress made in adopting control measures, growth of new and modified major sources of air pollution, changes in emissions as required to track reasonable further progress, progress in updating the emission inventories and the results of ongoing air quality studies related to the plan.

EPA finds that the State's commitment with regard to Annual Reporting is acceptable.

3. Data Base Consistency

The following assumptions are worthy of note and it is recommended that the State review their validity through the follow-up programs just discussed:

—A general decline in economic activity is projected by the State. If State and federal efforts to encourage economic development are successful, this assumption will require reassessment and may result in a SIP revision.
—The area source "growth projections" used in development of the emissions inventory are based on population projections inconsistent with recent State-certified area-wide planning progam data, i.e., as used in the "208 program;" they are, however, consistent with the population projections believed applicable at the time of plan development.

In view of the State's commitment for inventory improvements, EPA proposes not to condition its approval of the plan revision on this issue, but calls upon the State to integrate the updated information in its emission inventory improvements as well as its follow-up studies.

F. The SIP Revision Shall Expressly Quantify the Emissions Growth Allowance, if Any, That Will Be Allowed To Result From New Major Sources or Major Modifications of Existing Sources, Which May Not Be so Large as to Jeopardize Reasonable Further Progress Toward Attainment by the Required Date. The SIP Revision Shall Require Preconstruction Review Permits for New Major Sources and Major Modifications of Existing Sources, To Be Issued in Accordance With Section 173 of the Act

In order to assure that emission increases from new stationary sources or modifications of existing stationary sources will not exceed the projected "growth allowance" incorporated in the reasonable further progress demonstration discussed in Section III.C of this notice, the State has submitted procedures providing for the "offsetting" of emissions from major sources or modifications and for the tracking of all minor and area source emission changes. The emission "offsets" will be required in accordance with a new State regulation, 6 NYCRR Part 231, "Major Facilities." Also, the State has provided adequate commitment to submit emission offset applications and supporting material to EPA as SIP revisions.

This regulation requires new major sources and major source modifications located in or significantly impacting a nonattainment area to offset new emissions by providing reductions at existing sources beyond those available from control strategies in the SIP and to meet "lowest achievable emission rate" (LAER) control technology. In addition, the regulation requires that any other major sources owned or operated by the same "person" and located in the State be in compliance or meeting the requirements of an approved compliance schedule.

A major source is defined as one having allowable emissions of 50 tons per year, 1000 pounds per day, or 100 pounds per hour of particulate matter, sulfur dioxide, nitrogen dioxide, carbon monoxide, or volatile organic compounds. A major modification is defined as a change to an existing source causing allowable emissions to increase by these amounts for the specified pollutants.

The State has committed to "offset" all major source emission growth and tracking minor and area source emission growth against the annual emissions accommodated for in the reasonable further progress demonstrations discussed under Section III.C of this notice. If minor and area source growth exceeds these annual emission allowances, the State will require new major sources and major modifications to obtain emission reductions not already relied upon in the plan so as to provide for reasonable further progress toward attainment of standards.

On this basis, EPA proposes to find that this requirement was adequately addressed by the State.

G. The SIP Revisions Shall Provide Identification and Commitment of the Necessary Resources To Carry Out the Part D Provisions of the Plan

These requirements were adequately addressed by the State. In its SIP revision, New York State has presented the necessary identification of and commitment to the financial and manpower resources needed to carry out the plan and its associated future studies.

H. The SIP Revisions Shall Provide Evidence of Public, Local Government, and State Legislative Involvement and Consultation

1. Public Participation and Consultation

A public participation program carried out by the Erie and Niagara Counties Regional Planning Board, the lead planning agency designated by the Governor pursuant to Section 174 of the Clean Air Act, is described in the proposed SIP revision. This public participation program made use of press conferences, public meetings and information exchange with civic, labor and interest groups. The proposed SIP indicates that all of these methods were used during its preparation and will continue to be used in the future if it has to be revised. The proposed SIP revision also contains evidence that the public is actively involved, through an intensive effort comprised of monthly progress meetings and ad-hoc meetings on special issues, in the planning process and that there is consultation, including appropriate feedback, with those affected by the issues. EPA finds that this program is, and continues to be, effective and, on this basis, proposes to find the plan acceptable in meeting this requirement.

2. Intergovernmental Involvement and Consultation

The State has identified that the lead planning agency is carrying out the meassures necessary to satisfy this requirement. Principally, this is evidenced by the membership of local governmental officals and others on a Technical Advisory Committee on plan preparation, membership on the Erie and Niagara Counties Regional Planning Board and membership on the Niagara Frontier Transportation Committee, all of which played a major role in the development of the plan revision. In addition, special meetings were held during its preparation to brief various governmental bodies on the proposed SIP's content. Again, EPA finds this program effective and, therefore, proposes to find that this requirement was satisfactorily fulfiled.

I. The SIP Revisions Shall Provide an Identification and Brief Analysis of the Air Quality, Health, Welfare, Economic, Energy, and Social Effects of the Plan Provisions Chosen and the Alternatives Considered and a Summary of the Public Comments on the Analysis

The proposed plan revision for the Niagara Frontier includes a report, *Assessment of Air Pollution Control Strategies: Economic, Social, and Energy Impacts,* intended to fulfill this requirement. EPA proposes to find that this requirement was adequately addressed.

J. The SIP Revisions Shall Provide Written Evidence That the State and Other Governmental Bodies Have Adopted the Necessary Requirements in Legally Enforceable Form, and Are Committed to Implement and Enforce the Appropriate Elements of the SIP

As discussed in Sections III.D and III.F of this notice, with the exception of certain revisions to Part 212, "Process and Exhaust and/or Ventilation Systems," the State has submitted the required stationary source control regulations in legally enforceable form. Therefore, EPA is proposing to find this aspect of the proposed SIP revision acceptable. This proposed finding by EPA is based in part on the fact that those revisions to Part 212, which are discussed in this notice and are unadopted, only serve to exempt source categories from requirements of Part 212 provisions when they are regulated under other, more specific, regulations.

EPA otherwise also finds this element to be generally acceptable in that the plan has been officially adopted by the Governor and includes commitments by responsible agencies to implement the

activities for which they are responsible. In the case of local government responsibility, resolutions are included in the plan. As noted earlier, the "fugitive dust" strategies contained in the proposed SIP are in unenforceable form. The impact of EPA's policy on this issue is discussed in Section III.D of this notice.

IV. Unfulfilled Requirements

As explained in the earlier discussion of "conditional approval" EPA will conditionally approve a plan revision if it contains minor deficiencies and if the State provides adequate assurances that it will submit corrections by specified deadlines. Accordingly, EPA proposes to conditionally approve the New York State plan revision for the Niagara Frontier, if, during the comment period, the State commits to correct the deficiencies discussed in Section II of this notice and summarized below. The appropriate subsection number is references after each proposed condition.

(1) On or before January 1, 1981 the State must adopt and submit to EPA a revised Section 214.8, "Inspection Methods," of 6 NYCRR Part 214 so as:

- to provide a procedure for data aggregation and reduction of discontinous visible emission observations made of coke oven charging operations.
- to provide a procedure for aggregation and reduction of waste heat stack opacity data.

Subsection III.D.1.a(1)(d)).

(2) On or before January 1, 1981 the State must adopt and submit to EPA adequate test procedures for determining compliance of coke making equipment with the particulate matter mass emission standards contained in 6 NYCRR Part 214 (Subsection III.D.1.a(1)(g)).

(3) On or before January 1, 1981 the State must adopt and submit to EPA a revised § 214.2(a), "Charging," of 6 NYCRR Part 214 so as to provide an acceptable visible emissions standard for coke oven charging operation (Subsection III.D.1.a(2)(a)).

(4) On or before January 1, 1981 the State must adopt and submit to EPA a revised § 214.2(b), "Coke pushing and transport to quench tower," of 6 NYCRR Part 214 so as to provide:

- a fugitive emissions opacity standard for coke oven batteries during pushing and transport operations; and
- a mass emission limitation specific to pushing emission control sheds exhausts.

(Subsection III.D.1.a(2)(b)).

(5) On or before January 1, 1981 the State must adopt and submit to EPA a revised § 214.3(a), "Wet quench tower," of 6 NYCRR Part 214 so as to provide an acceptable limitation on the quality of water used for quenching of coke or a mass emission standard, which must include specific test procedures applicable to each individual source of this type in the State. (Subsection III.D.1.a(2)(c)).

(6) On or before January 1, 1981 the State must adopt and submit to EPA revised §§ 214.8(c) and 214.8(d) in § 214.8, "Inspection Methods," of 6 NYCRR Part 214 so as to provide for inclusion of only operating ovens in determining compliance of coke oven batteries with visible emission standards for doors, charging hole lids, and offtake piping emissions (Subsection III.D.1.a(2)(d)).

(7) On or before January 1, 1981 the State must submit to EPA adequate test procedures for determining compliance of steel and iron process equipment with the particulate matter mass emission standards contained in 6 NYCRR Part 216, "Iron and/or Steel Processes" (Subsection III.D.2.a(2)).

(8) On or before January 1, 1981 the State must adopt and submit to EPA a revised 6 NYCRR Part 216 so as to provide either a limitation on casthouse fugitive emissions opacity or performance criteria for approval of proposed control systems for casthouse emissions (Subsection III.D.2.b(1)).

(9) On or before January 1, 1981 the State must adopt and submit to EPA a revised 6 NYCRR Part 216 so as to provide for:

- capture and cleaning of all BOF fugitive emissions, including charging operations;
- installation of control equipment to capture and clean all BOF fugitive emissions;
- mass emission limitations for primary and secondary control devices representing reasonably available control technology; and
- visible emission limitations reflecting reasonably available control technology.

(Subsection III.D.2.b(2))

(10) On or before January 1, 1981 the State must adopt and submit to EPA a revised 6 NYCRR Part 216 so as to provide for mass emission limitations for sinter plant windbox and discharge end emissions reflecting reasonably available control technology (Subsection III.D.2.b(3)).

(11) On or before January 1, 1981 the State must adopt and submit to EPA a revised 6 NYCRR Part 216 so as to provide for mass emission limitations for automatic scarfing machine emissions reflecting reasonably available control technology (Subsection III.D.2.b(4)).

(12) On or before January 1, 1981 the State must adopt and submit to EPA a revised 6 NYCRR Part 200, "General Provision," § 200.1(j), "By-product coke oven battery," to provide for an acceptable definition of coke oven batteries, and Section 200.1(dd), "Iron and/or steel processes," to provide clarification to the exclusion of iron-ore beneficiating processes (Subsection III.D.3).

(13) On or before July 1, 1981 the State must submit to EPA additional emission inventory data for the baseline year and projected attainment year indicated in the SIP revision document. Such data shall be in a format equivalent to that presented in the EPA document, *Workshop on Requirements for Nonattainment Area Plans*, April 1978 and shall be generated, in part, as a result of the emissions inventory improvement programs identified in the plan (Subsection III.E.1).

V. Public Comment

Interested persons are invited to comment on any element of the subject revision and on whether or not the proposed New York State Implemenation Plan revision meets Clean Air Act requirements. Comments received on or before October 14, 1980 will be considered in EPA's final decision. All comments received will be available for inspection at the Region II office of EPA at 26 Federal Plaza, Room 908, New York, New York 10007.

Under Executive Order 12044, EPA is required to judge whether a regulation is "significant" and therefore subject to the procedural requirements of the Order or whether it may follow other specialized development procedures. I have reviewed this package and determined that it is a specialized regulation not subject to the procedural requirements of Executive Order 12044.

This notice of proposed rulemaking is issued under the authority of Section 110, 172, and 301 of the Clean Air Act, as amended, to advise the public that comments may be submitted on whether the proposed revision to the New York State Implementation Plan should be approved or disapproved.

Dated: July 22, 1980.

(Secs. 110, 172 and 301 of the Clean Air Act, as amended (42 U.S.C. 7410, 7502, and 7601))

Charles S. Warren,

Regional Administrator, Environmental Protection Agency.

[FR Doc. 80-24766 Filed 8-14-80; 8:45 am]

BILLING CODE 6560-01-M

---

40 CFR Part 60

[FRL 1417-2]

Alternate Method 1 to Reference Method 9 of Appendix A—Determination of the Opacity of Emissions From Stationary Sources Remotely by Lidar; Addition of an Alternate Method

AGENCY: Environmental Protection Agency (EPA).

ACTION: Proposed rule; extension of comment period.

SUMMARY: EPA proposed Alternate Method 1 to Reference Method 9 on July 1, 1980, 45 FR 44329. Due to numerous requests EPA is extending the comment period 60 days to September 25, 1980.

DATES: Comments on this proposed Alternate Method must be received on or before September 25, 1980.

ADDRESS: Comments should be submitted to Arthur W. Dybdahl, Chief, Remote Sensing Section, National Enforcement Investigations Center, Environmental Protection Agency, P.O. Box 25227, Denver, Colorado 80225.

FOR FURTHER INFORMATION CONTACT: Arthur W. Dybdahl, 303/234-5306.

Dated: August 5, 1980.

Richard D. Wilson,

Assistant Administrator, Enforcement.

[FR Doc. 80-24757 Filed 8-14-80; 8:45 am]

BILLING CODE 6560-01-M

INTERSTATE COMMERCE COMMISSION

49 CFR Part 1039

[Ex Parte No. 358 (Sub-1)

Change of Policy, Railroad Contract Rates (Standards and Procedures)

AGENCY: Interstate Commerce Commission.

ACTION: Postponement of due date for filing comments in proposed rulemaking.

SUMMARY: This proceeding involves proposed standards for railroad contract rates. On April 29, 1980 (45 FR 28281) we requested comments by June 13, 1980. The comment date has been postponed twice previously (45 FR 39317, June 10, 1980, and 45 FR 47172, July 14, 1980) because of pending relevant legislation and currently is August 27, 1980. The Arizona Public Service Company and the Salt River Project Agricultural Improvement and Power District have requested an extension until the new legislation is enacted. At the present time, the status of the legislation is uncertain, but it clearly will not be enacted by August 27. We are therefore extending the comment due date until September 15, 1980.

DATES: Comments are now due September 15, 1980.

FOR FURTHER INFORMATION CONTACT: Richard B. Felder (202) 275-7693.

Decided: August 11, 1980.

By the Commission, Robert C. Gresham, Acting Chairman.

Agatha L. Mergenovich,

Secretary.

[FR Doc. 80-24796 Filed 8-14-80; 8:45 am]

BILLING CODE 7035-01-M

Notices

Federal Register
Vol. 45, No. 160
Friday, August 15, 1980

This section of the FEDERAL REGISTER contains documents other than rules or proposed rules that are applicable to the public. Notices of hearings and investigations, committee meetings, agency decisions and rulings, delegations of authority, filing of petitions and applications and agency statements of organization and functions are examples of documents appearing in this section.

DEPARTMENT OF AGRICULTURE

Food and Nutrition Service

National Average Minimum Value of Donated Foods for the Period July 1, 1980, Through June 30, 1981

AGENCY: Food and Nutrition Service, USDA.

ACTION: Notice.

Pursuant to Section 6(e) and 17(h) of the National School Lunch Act, as amended, and the regulations governing the Donation of Foods (7 CFR Part 250) and Cash in Lieu of Commodities (7 CFR Part 240), notice is hereby given that the national average minimum value of donated foods, or cash in lieu thereof, per lunch under the National School Lunch Program (7 CFR Part 210) and per lunch and supper under the Child Care Food Program (7 CFR Part 226), shall be 15.50 cents for the period July 1, 1980 through June 30, 1981. This value was derived by applying the annual percentage change in a three-month simple average value of the Price Index Used in Schools and Institutions for March, April, and May of 1979 and for March, April, and May of 1980 (from 230.9 in 1979 to 228.5 in 1980). The Index, prescribed in section 5(b) of Pub. L. 95-627, is computed using five major food components in the Bureau of Labor Statistics' Producer Price Index (cereal and bakery products, meats, poultry, and fish, dairy products, processed fruits and vegetables, and fats and oils). Each component is weighted using the same relative weight as determined by the Bureau of Labor Statistics.

The major reason that this rate is lower than had earlier been anticipated is that meat prices which comprise about half of the index, are considerably at a lower level than they were a year ago.

While the level of assistance under existing legislation is set at 15.50 cents, legislation is being considered by the Congress, which, if enacted, would reduce the rate to 13.50 cents per lunch for School Year 1981. Immediate action will be taken to issue a subsequent notice in accordance with the terms and conditions stated in the legislation, upon enactment.

(Catalog of Federal Domestic Assistance Nos. 10.555 and 10.558)

Effective Date: This notice shall be effective as of July 1, 1980.

Dated: 12 August 1980.

Carol Tucker Foreman,

Assistant Secretary for Food and Consumer Services.

[FR Doc. 80-24818 Filed 8-14-80; 8:45 am]

BILLING CODE 3410-30-M

Forest Service

Lomex Prospecting Los Padres National Forest, San Luis Obispo County; Notice of Intent To Prepare an Environmental Impact Statement

The USDA—Forest Service will prepare an Environmental Impact Statement in response to a proposal submitted by Lomex Corporation to prospect for uranium in the Los Padres National Forest.

Lomex Corporation currently holds several mining claims in the La Panza area of the Forest and the proposed exploratory work is authorized by the Mining Law of 1872, as amended, and constitutes the assessment work required under Section 314, Title III of the Federal Land Policy and Management Act of 1976. Mining activities on public domain are authorized by Federal statute, not by Forest Service special use permits, leases or easements. The authority of the responsible official is to review and make recommendations on the operating plan as provided under the Federal Code of Regulations, Title 36, Chapter II, Part 252.

Preparation of the Environmental Impact Statement will begin with a scoping of the major issues and concerns significant to the decision. All individuals, organizations, Federal, State and local agencies who may be interested in or affected by the decision will be invited to participate in this process.

The first public meeting will be held at Santa Margarita Community Hall, Tuesday, August 26, 1980, 7:00 p.m., Santa Margarita, California.

It is anticipated that the Draft Environmental Impact Statement will be available for public review in January 1981, with a final Environmental Impact Statement to be prepared by April 1981.

Written comments, suggestions and questions concerning the proposed action should be sent to Stephen P. Horne, Forest Cultural Resources Coordinator, Los Padres National Forest, 42 Aero Camino, Goleta, California 93017.

Erwin N. Ward,

Deputy Forest Supervisor.

August 8, 1980.

[FR Doc. 80-24700 Filed 8-14-80; 8:45 am]

BILLING CODE 3410-11-M

Rural Electrification Administration

Intent To Prepare Environmental Impact Statement and To Hold Public Scoping Meetings

Notice is hereby given that the Rural Electrification Administration (REA), if lead agency, intends to prepare an Environmental Impact Statement (EIS) in accordance with Section 102(2)(c) of the National Environmental Policy Act of 1969, in connection with a possible loan guarantee commitment to Tri-State Generation and Transmission Association, Inc. (Tri-State), 12076 Grant Street, Denver, Colorado 80241, for the construction of certain generation and related transmission facilities. In connection with the proposed Tri-State Project, REA also intends to hold public scoping meetings on September 15 to September 18, 1980, to aid in the Federal decisionmaking process by identifying issues and concerns to be addressed in the EIS.

Tri-State and REA have been and are exploring all viable alternatives for meeting the increasing power requirements of Tri-State's member electric distribution cooperatives as described in REA Bulletin 20-21:320-21, including (a) new generation, (b) no project, (c) conservation measures, (d) purchase power from other utilities, (e) shared generating units with other utilities, (f) alternative sites for the generating plant and transmission line, (g) alternative fuels, and (h) alternative methods of generation.

Tri-State is investigating possible siting areas within and adjacent to its service area for a site capable of supporting an ultimate 1500 MW coal-fired generating plant and related

transmission facilities. Tri-State has tentatively identified four preferred sites, one located near the town of Hemingford, Nebraska and the others located near the towns of Douglas, Rawlings, and Buffalo, Wyoming. Tri-State's present preferred alternative consists of the construction of one 350 MW coal-fired generating unit and its associated transmission facilities initially, with the anticipation of adding subsequent generating units when needed. Other major facilities associated with this alternative could include, depending on the selected site, rail access for coal deliveries; truck access if coal reserves are close to the site; a water storage reservoir and/or water pipeline; environmental protection systems including a cooling system, wastewater and sewage treatment, control of sulfur dioxide, nitrogen oxides and particulates; a sludge and ash waste disposal system either on or off-site; and other ancillaries.

Public scoping meetings will be held in order to obtain public input and comments concerning the need for the project, sites and route locations, potential project and site alternatives, significant issues that should be addressed in the EIS, and other matters concerning the proposed construction. A representative of REA will act as chairperson for said meetings, and other involved Federal and State agencies are invited to send representatives. The schedule for the meetings is as follows:

Date: September 15, 1980.
Location: Jefferson Memorial Community Center, 3rd and Spruce, Rawlings, Wyoming.
Time: Starting at 7 P.M.

Date: September 16, 1980.
Location: Church Hall, Church of St. John the Baptist, East, Synder and Lobbin Ave., Buffalo, Wyoming.
Time: Starting at 7 P.M.

Date: September 17, 1980.
Location: Converse County High School Auditorium, Hamilton St., Douglas, Wyoming.
Time: Starting at 7 P.M.

Date: September 18, 1980.
Location: Congressional Church, United Church of Christ, 620 Cheyenne Ave., Hemingford, Nebraska.
Time: Starting at 7 P.M.

REA encourages the public to attend these public scoping meetings and provide their input. Any person, group or governmental entity which desires to make its comments, questions and/or recommendations in writing may do so either at the meetings or by writing to Joe S. Zoller, Assistant Administrator-Elecric, Rural Electrification Administration, U.S. Department of Agriculture, Washington, D.C. 20250. A record will be made of the meetings and comments will be responded to in the EIS.

REA's potential financing assistance to Tri-State will be subject to, and release of funds thereunder will be contingent upon, REA's arriving at a satisfactory conclusion with respect to environmental effects. Final action will be taken only after compliance with the EIS procedures required by the National Environmental Policy Act of 1969.

Dated at Washington, D.C., this 11th day of August 1980.

Susan T. Shepherd,

Acting Administrator, Rural Electrification Administration.

[FR Doc. 80-24669 Filed 8-14-80; 8:45 am]

BILLING CODE 3410-15-M

Eastern Iowa Power & Light Cooperative; Final Environmental Impact Statement

The Rural Electrification Administration (REA) is hereby giving notice that a Final Environmental Impact Statement (FEIS), Louisa Generating Station, Louisa and Muscatine Counties, Iowa-Mississippi River, dated June 1980, was prepared by the Corps of Engineers and made available to the public through the Environmental Protection Agency's July 11, 1980, Federal Register Notice.

The Corps of Engineers assumed lead agency responsibility for the preparation of the Environmental Impact Statement for this project. REA participated in the preparation of this Environmental Impact Statement as a Cooperating Agency in accordance with section 102(2)(C) of the National Environmental Policy Act of 1969, and in connection with a request for a loan guarantee commitment from the Rural Electrification Administration for Eastern Iowa Power and Light Cooperative of Wilton, Iowa. This loan guarantee commitment is planned to assist in obtaining financing for a 4.6 percent undivided ownership interest in the 650 MW coal-fired steam electric Louisa Generating Station and associated transmission facilities being constructed by Iowa-Illinois Gas and Electric Company.

Additional information may be secured by request submitted to the Assistant Administrator—Electric, Rural Electrification Administration, U.S. Department of Agriculture, Washington, D.C. 20250. Individual copies of the Final Environmental Impact Statement are available upon request addressed to District Engineer, U.S. Army Engineer District, Rock Island, Attention: Planning and Reports Branch, Clock Tower Building, Rock Island, Illinois 61201. The Final Environmental Impact Statement may be examined during regular business hours at: (1) The address of the COE office given above, (2) the Musser Public Library, 304 Iowa Street, Muscatine, Iowa 52761, (3) the Wapello Public Library, 119 North Second Street, Wapello, Iowa 52653, (4) the offices of Eastern Power and Light Cooperative, 600 East Fifth Street, Wilton, Iowa 52778, and (5) the U.S. Department of Agriculture, REA, Power Supply Division, Room 5829, 14th and Independence Avenue SW., Washington, D.C.

Final REA action with respect to this matter (including any release of funds) may be taken after 30 days, but only after REA has reached satisfactory conclusions with respect to environmental effects and after requirements set forth in the National Environmental Policy Act of 1969 are met.

Dated at Washington, D.C., this 7th day of August 1980.

Robert W. Feragen,

Administrator, Rural Electrification Administration.

[FR Doc. 80-24821 Filed 8-14-80; 8:45 am]

BILLING CODE 3410-15-M

Seminole Electric Cooperative, Inc., Finding of No Significant Impact

Notice is hereby given that the Rural Electrification Administration (REA) has prepared an Environmental Assessment (EA) and based upon this Assessment REA made a Finding of No Significant Impact (FONSI) in connection with Seminole Electric Cooperative, Inc.'s, proposed modification of Seminole Units 1 and 2 transmission facilities.

The proposed modifications to the transmission facilities will be located in Section 35, Range 22 East, Township 14, in Marion County, Florida. The modifications include construction of a 230 kV switching station and a slight rerouting of the incoming transmission line to the Silver Springs North Switching Station to provide for an improved interconnection plan between the Seminole Plant and the bulk transmission system in the Ocala area.

Seminole prepared a Borrower's Environmental Report (BER) concerning the proposed modification. Based on this BER and other support documents REA prepared an EA. REA's independent evaluation of the project and the above-mentioned documents leads it to conclude that approval of the subject modification does not represent a major Federal action that will significantly affect the quality of the human

environment and in accordance with Sections IV B and IV D:1 of REA Bulletin 20-21: 320-21, REA has made a finding of no significant impact.

Various alternatives to the proposed project have been considered by Seminole and REA. The alternatives include no action, alternative connection points and alternative routes. It has been determined that the most economical and environmentally acceptable alternative is the proposed project.

REA has also determined that the proposed project will not adversely impact any threatened or endangered species, important farmlands, archeological and historical resources, wetlands, and floodplains.

Copies of REA's FONSI and EA, and Seminole's BER may be reviewed in the office of the Director, Room 5827, South Agriculture Building, Power Supply Division, Rural Electrification Administration, Washington, D.C. 20250, and East Busch Blvd., Suite 108, Tampa, Florida 33612.

Dated at Washington, D.C., this 7th day of August 1980.

Robert W. Feragen,

Administrator, Rural Electrification Administration

[FR Doc. 80-24822 filed 8-14-80; 8:45 am]

BILLING CODE 3410-15-M

ARMS CONTROL AND DISARMAMENT AGENCY

Performance Review Board; Membership

AGENCY: U.S. Arms Control and Disarmament Agency.

ACTION: Notice of membership of Performance Review Board.

SUMMARY: In accordance with 5 U.S.C. 4314(c)(4), the U.S. Arms Control and Disarmament Agency announces the appointment of Performance Review Board members.

EFFECTIVE DATE: July 29, 1980.

FOR FURTHER INFORMATION CONTACT: Hazel Wyatt, Personnel Officer, U.S. Arms Control and Disarmament Agency, Washington, D.C. 20451, (202) 632-2034.

The following are the names and present titles of the individuals appointed to the register from which Performance Review Boards will be established by the U.S. Arms Control and Disarmament Agency. Each individual will serve a one year renewable term beginning on the effective date of this notice. Specific Performance Review Boards will be established as needed from this register:

George W. Ashworth, Assistant Director, Weapons Evaluation and Control Bureau
Roger G. Booth, Chief, Advanced Technology Division, Multilateral Affairs Bureau
A. M. Christopher, Deputy Assistant Director, Weapons Evaluation and Control Bureau
David M. Clinard, Assistant Director, International Security Programs Bureau
Norman G. Clyne, Executive Secretary
Thomas D. Davies, Assistant Director, Multilateral Affairs Bureau
Maurice Eisenstein, Chief, Technology Transfer Group, Weapons Evaluation and Control Bureau
Lawrence E. Finch, Deputy Assistant Director, Multilateral Affairs Bureau
Edmund S. Finegold, Chief, Arms Transfer Division, Weapons Evaluation and Control Bureau
R. Lucas Fischer, Chief, Regional Division, International Security Program Bureau
Charles C. Flowerree, U.S. Ambassador to the Committee on Disarmament
Thomas Graham, Jr., General Counsel
James T. Hackett, Administrative Director
Thomas A. Halsted, Public Affairs Adviser
Alfred J. Hartzler Deputy Chief, Office of Operations Analysis
Betty Jane Jones, Chief, International Relations Division, Multilateral Affairs Bureau
B/G John R. Lasater, Senior Military Adviser
Alfred Lieberman, Chief, Office of Operations Analysis
Margot Mazeau, Assistant General Counsel
Joerg H. Menzel, Chief, Nuclear Safeguards Division, Non-Proliferation Bureau
James Montgomery, Counselor
Robert E. Morrison, Intelligence Adviser
Alan F. Neidle, Deputy Assistant Director, Multilateral Affairs Bureau
James M. Pope, Deputy Public Affairs Adviser
Robert S. Rochlin, Deputy Assistant Director, Non-Proliferation Bureau
Philip G. Schrag, Deputy General Counsel
Owen J. Sheaks, Chief, Nuclear Energy Division, Non-Proliferation Bureau
James P. Timbie, Deputy Assistant Director, International Security Programs Bureau
Charles N. Van Doren, Assistant Director, Non-Proliferation Bureau
Richard L. Williamson, Chief, Nuclear Exports Division, Non-Proliferation Bureau

August 11, 1980.

John H. Murphy,

Acting Administrative Director.

[FR Doc. 80-24696 Filed 8-14-80; 8:45 am]

BILLING CODE 6820-32-M

CIVIL AERONAUTICS BOARD

[Dockets 38223 and 38221]

Evelyn A. Lipkin v. Pan American World Airways, Inc., and Dan Moritz Jacobson v. Pan American World Airways, Inc.; Assignment of Proceeding

These proceedings are hereby assigned to Administrative Law Judge Henry M. Switkay. Future communications should be addressed to Judge Switkay.

Dated at Washington, D.C., August 8, 1980.

Joseph J. Saunders,

Chief Administrative Law Judge.

[FR Doc. 80-24760 Filed 8-14-80; 8:45 am]

BILLING CODE 6320-01-M

CIVIL RIGHTS COMMISSION

Federal Role in the Administration of Justice

Notice is hereby given pursuant to the provisions of the Civil Rights Act of 1957, 71 Stat. 634, as amended, that a public hearing of the U.S. Commission on Civil Rights will occur on September 16, 1980 in Hearing Room 1 of the Maritime Commission, 1100 L Street NW., Washington, D.C. An executive session not open to the public may be convened at any appropriate time before or during the hearing.

The purpose of the hearing is to collect information within the jurisdiction of the Commission, particularly concerning the role of the Federal government in the administration of justice.

The Commission is an independent bipartisan factfinding agency authorized to study, collect, and disseminate information and to appraise the laws and policies of the Federal government with respect to discrimination or denials of equal protection of the laws under the Constitution because of race, color, religion, sex, age, handicap, or national origin, or in the administration of justice.

Dated at Washington, D.C., August 12, 1980.

Arthur S. Flemming,

Chairman.

[FR Doc. 80-24829 Filed 8-14-80; 8:45 am]

BILLING CODE 6335-01-M

DEPARTMENT OF COMMERCE

International Trade Administration

Racing Plates (Aluminum Horseshoes) From Canada; Results of Administrative Review of Antidumping Finding

AGENCY: U.S. Department of Commerce, International Trade Administration.

ACTION: Notice of results of administrative review of antidumping finding.

SUMMARY: This notice is to advise the public that the Department of Commerce has conducted an administrative review of the antidumping finding on racing plates (aluminum horseshoes) from Canada. The scope of the review is limited to the only known producer—the Canadian Racing Plate Co.—and to

three separate time periods. The review has disclosed dumping margins on shipments during two of the time periods (October 1, 1976 through September 30, 1977 and December 1, 1978 through November 30, 1979) and no imports of the racing plates during the third period (December 1, 1979 through January 31, 1980). (The period October 1, 1977 through November 30, 1978 was covered by a master list issued prior to January 1, 1980, and the issue of the Department of Commerce's obligation to conduct administrative review for entries, unliquidated as of January 1, 1980 and covered by such a master list, is under review.) As a result of the review, the Department has preliminarily decided to assess dumping duties equal to the calculated margins on shipments occurring during the periods for which margins have been found. Interested parties are invited to comment on this decision.

EFFECTIVE DATE: August 15, 1980.

FOR FURTHER INFORMATION CONTACT: Ms. Linda L. Pasden, Office of Compliance, International Trade Administration, U.S. Department of Commerce, Washington, D.C. 20230 (202–377–4106).

SUPPLEMENTARY INFORMATION:

Procedural Background

On February 27, 1974, a dumping finding with respect to racing plates (aluminum horseshoes) from Canada was published in the Federal Register as Treasury Decision 74–77 (39 FR 7579). On January 1, 1980, the provisions of Title I of the Trade Agreements Act of 1979 became effective. On January 2, 1980, the authority for administering the antidumping duty law was transferred from the Department of the Treasury to the Department of Commerce (hereinafter referred to as "the Department"). The Department published in the Federal Register of March 28, 1980 (45 FR 20511–12) a notice of intent to conduct administrative review of all outstanding dumping findings. As required by Section 751 of the Tariff Act of 1930 (hereinafter referred to as the "Act"), the Department has conducted an administrative review of the finding on racing plates (aluminum horseshoes) from Canada.

Scope of the Review

Imports covered by this review are racing plates (aluminum horseshoes) used on race horses, polo, jumping, hunting, and other performing horses, as differentiated from pleasure and work horses; are made of aluminum, may have cleats or caulks and come in a variety of sizes. They are provided for in item 652.4200 of the Tariff Schedules of the United States Annotated (TSUSA). The Department knows of only one Canadian producer or exporter of racing plates to the United States. That firm is the Canadian Racing Plate Co. Limited.

The review covers all time periods, up to the anniversary date of the finding, during which shipments by the Canadian Racing Plate Co. Limited may have been made and for which duties remain unassessed. There are three such time periods:

October 1, 1976–September 30, 1977

December 1, 1978–November 30, 1979

December 1, 1979–January 31, 1980

Statutory values were calculated and a master list issued for the period October 1, 1977 through November 30, 1978. The issue of the Department's obligation to conduct administrative review of entries, unliquidated as of January 1, 1980 and covered by this or other master lists, is under review. Liquidation has been suspended pending disposition of the issue.

United States Price

In calculating United States price the Department has used purchase price, as defined in Section 772(b) of the Act, since all sales by the Canadian Racing Plate Co. were made to unrelated purchasers. Purchase prices are ex-factory and are derived from the United States delivered price with deductions for U.S. and Canadian inland freight, brokerage charges and U.S. duty. No other deductions have been made.

Foreign Market Value

In calculating foreign market value, the Department has used home market price, as defined in Section 773(a)(1)(A) of the Act, since the Canadian Racing Plate Co. Limited sold such or similar merchandise in Canada in sufficient quantities to provide an adequate basis for comparison. Canadian Racing Plate Co. Limited sold 41 percent of its total production in the home market during the time periods involved. The home market prices are based upon the ex-factory packed price. No adjustments were made or claimed.

Results of Review

As a result of our comparison of United States price to foreign market value, I preliminarily determine that the following weighted average margins existed:

	Percent margin
October 1, 1976–September 30, 1977	6.11
December 1, 1978–November 30, 1979	62.66
December 1, 1979–January 31, 1980	(1)

[1] No sales in the United States.

Individual statutory values may vary from the percent stated above. Appraisement instructions will be issued directly to the Customs Service.

Interested parties may submit written comments on this preliminary determination on or before September 15, 1980 and may request disclosure and/or a hearing on such determination on or before September 2, 1980. Absent any comment, this determination shall become final on or before September 19, 1980.

The Department shall assess, and the U.S. Customs Service shall collect, duties on all unliquidated entries entered during the time periods involved, in amounts equal to the size of the calculated margins. Further, as required by § 353.48(b) of Commerce Regulations, a cash deposit based upon the margin on the last known shipments by the Canadian Racing Plate Co. Limited, that is, 62.66 percent of the entered value, will be required on all shipments entered, or withdrawn from warehouse, for consumption on or after the date of the final determination. This latter requirement shall remain in effect until publication of the results of the next administrative review.

This administrative review and notice are in accordance with Section 751(a)(1) of the Act (93 Stat. 175, 19 U.S.C. 1675(a)(1)) and § 353.53 of Commerce Regulations (19 CFR 353.53, 45 FR 8206).

John D. Greenwald,

Deputy Assistant Secretary, Import Administration.

August 12, 1980.

[FR Doc. 80-24823 Filed 8-14-80; 8:45 am]

BILLING CODE 3510-25-M

Applications for Duty-Free Entry of Scientific Articles

The following are notices of the receipt of applications for duty-free entry of scientific articles pursuant to Section 6(c) of the Educational, Scientific and Cultural Materials Importation Act of 1966 (Pub. L. 89–651; 80 Stat. 897). Interested persons may present their views with respect to the question of whether an instrument or apparatus of equivalent scientific value for the purposes for which the article is intended to be used is being manufactured in the United States. Such comments must be filed in triplicate

with the Director, Statutory Import Programs Staff, U.S. Department of Commerce, Washington, D.C. 20230, within 20 calendar days after the date on which this notice of application is published in the Federal Register.

Regulations (15 CFR 301.9) issued under the cited Act prescribe the requirements for comments.

A copy of each application is on file, and may be examined between 8:30 A.M. and 5:00 P.M., Monday through Friday, in Room 3109 of the Department of Commerce Building, 14th and Constitution Avenue, N.W., Washington, D.C. 20230.

Docket No. 80-00338. Applicant: University of California, San Diego, Department of Chemistry, B-014, La Jolla, CA 92903. Article: Rare Gas Halide Laser, Model TE-861. Manufacturer: Lumonics, Canada. Intended use of Article: The article is intended to be used as part of a laser system which will be used to explore the dynamics and mechanisms of several chemical processes in liquid solutions. This instrumentation will provide increased sensitivity, enhanced specificity and greater time resolution for determining molecular structure, kinetics, and dynamics on the time scale of a picosecond. Specific applications will include:

(1) Detailed measurements of the molecular dynamics of reactions to solution;

(2) Elucidation of intramolecular relaxation and primary photochemistry in molecules which undergo significant distortion in excited electronic states;

(3) Structural changes arising from the interaction of CO, O_2, and other ligands with hemoglobin and small model compounds;

(4) Dynamics of nucleic acid polymers and the interaction of fluorescent probes with DNA and RNA; and

(5) The study of the primary events of photosynthesis, including light harvesting, energy transfer and photooxidation-reduction in plant chloroplasts and bacterial reaction centers.

The article will also be used to train students in the use of the laser and related instrumentation in the courses: Chemistry 199-Senior Research and Chemistry 200-Graduate Research. Application received by Commissioner of Customs: June 23, 1980.

Docket No. 80-00339. Applicant: University of Utah Research Institute, Purchasing Department, 420 Chipeta Way, Suite 100, Salt Lake City, Utah 84108. Article: NMR Spectrometer, Model CXP 200 and Accessories. Manufacturer: Bruker Physik AG, West Germany. Intended use of article: The article is intended to be used in studying organic polymers, fossil fuels and other complex organic solids. Investigations will be undertaken to better understand and elucidate the structure and/or conformation of organics in the solid state. Application received by Commissioner of Customs: June 16, 1980.

Docket No. 80-00340. Applicant: Ellis Hospital, 1101 Nott Street, Schenectady, N.Y. 12308. Article: Linear Accelerator, G2800B Therac 6/Neptune. Manufacturer: Atomic Energy of Canada Limited, Canada. Intended use of article: The article is intended to be used for the study of the responses of malignant disease (tumor) to different modalities separately and in combination. The objectives pursued in the course of these investigations are two-fold: (a) ascertainment of the efficacy of specific treatment modalities for malignant tumors and (b) assessment and elimination of complications arising from such modalities. The article will also be used in the teaching of patient management in the various disciplines particularly those being treated by radiation therapy. Application received by Commissioner of Customs: June 16, 1980.

Docket No. 80-00341. Applicant: The University of Iowa, Department of Physics and Astronomy, Iowa City 52242. Article: Electrical Flight Grapple Fixture. Manufacture: SPAR Aerospace Limited, Canada. Intended use of article: The article is a piece of space flight hardware which attaches to the Plasma Diagnostics Package (PDP) so that the PDP can be picked up, manipulated and operated by the Remote Manipulator System (RMS) of the Space Transportation System. The instrumentation is suitable for measuring the plasmas waves, and fields that exist in the ambient ionosphere, and that result from preturbations induced by the motion of the large-sized Orbiter through the magnetized plasma, from "inteference" due to the Orbiter/Space lab operation systems and from modifications to the ionosphere induced by the injection of molecules into the plasma by the Orbiter cooling, reaction control and propulsion systems. Application received by Commissioner of Customs: June 16, 1980.

Docket No. 80-00342. Applicant: LaGuardia Community College, 31-10 Thompson Avenue, Long Island City, N.Y. 11101. Article: Electron Microscope, Model EM 109 and Accessories. Manufacturer: Carl Zeiss, West Germany. Intended use of article: The article is intended to be used in a research project which involves an intrastructural study of the cercarial causative agents of human Schistosome Dermatitis. The organisms to be studied are the free living cercariae of the trematode parasites *Trichobilharzia physellae* and *Austrobilharzia veriglandis*. Various tissues of two species will be studied including the tegument, musculature, pre and postacetabular glands, digestive tract and excretory systems. The ultrastucture of the cells comprising these tissues will be investigated. Particular attention will be paid to those materials which will eventually come in contact with human skin, i.e., the outer tegument (glycocalyx), secretory products of the glands and excretory products. In addition, the article will be used as part of the Research Techniques Practicum, a one-term course designed to provide the student with selected basic research techniques necessary to pursue a specific line of research. Application received by Commissioner of Customs: June 16, 1980.

Docket No. 80-00343. Applicant: Polytechnic Institute of New York, 33 Jay Street, Brooklyn, N.Y. 11201. Article: NMR Spectrometer, Model FX-90Q(II) and accessories. Manufacturer: JEOL Ltd., Japan. Intended use of article: The article is intended to be used in research program in the general areas of bio-inorganic, organic, physical and polymer chemistry. Principle usage will involve ^{13}C with significant interest in other nuclei such as ^{15}N, ^{19}F and ^{31}P while less than 25% of the total usage will involve ^{1}H as the magnetic species. The research projects being conducted will involve studies of:

(1) Modified Polystyrene for Polymer Blends,

(2) Reorientational and Collisional Relaxation Processes,

(3) Modified Cycloamyloses as Efficient Enzyme Models,

(4) Ring Contraction Rearrangements in Substituted Nitrocyclohexenes,

(5) ^{13}C NMR of metal Complexes with Ligands Containing Energetically Low Lying π Systems,

(6) Borate Interaction with Sugars in Anomeric and Furanose-Pyranose Equilibrium,

(7) Molecular Geometry of Microbial Polyaccharides,

(8) Conformational Properties of Polymers with Mesogenic side Groups, and

(9) ^{31}P-NMR of Phosphine Derivatives.

In addition, the article will be used in the following formal laboratory courses: Organic Chemistry Laboratory, Physical Chemistry Laboratory, Instrumental Methods Laboratory, and Polymer Laboratory. Application received by Commissioner of Customs: June 18, 1980.

Docket No.: 80-00105. Applicant: National Radio Astronomy Observatory, Associated Universities, Inc., 2010 N.

Forbes Blvd., Suite 100, Tucson AZ 85705. Article: Replacement of Klystron, Model VRT 2124B6. Manufacturer: Varian Associates of Canada, Canada. Intended use of Article: The article is intended to be used as a phase-locked local oscillator in a millimeter wave radio astronomy receiver which is used in conjunction with a microwave antenna to measure the intensity, polarization, frequency and direction of cosmic radiation. Application received by Commissioner of Customs: June 25, 1980.

Docket No.: 80-00332. Applicant: Ohio University, Department of Chemistry, Athens, Ohio 45701. Article: NMR Spectrometer, Model FX-90Q(II) and Accessories. Manufacturer: JEOL Ltd., Japan. Intended use of Article: The article is intended to be used for studies of samples derived from research programs in the general areas of organic, inorganic, physical, environmental and analytical chemistry and biochemistry. The following research projects will make use of FT-NMR spectrometer:

(1) Polymerization of fulvenes,
(2) Structural studies of coals,
(3) Development of an HPLC/FT-NMR interface,
(4) Metal complexes of functionalized polymers,
(5) Role of carbene intermediates in thermal reactions of acetylenes, and allenes,
(6) Effect of antioxidants on chemical carcinogenesis and the oxidation of polycyclic hydrocarbons, and
(7) Interactions of histone proteins with SV-40 DNA.

Pulsed fourier transform NMR spectra will be obtained on at least the following nuclei: ^{1}H, ^{13}C ^{19}F, ^{31}P, ^{33}S, ^{117}Sn and ^{119}Sn, in various molecules as required for the different projects. Chemical shifts coupling constants and Nuclear Overhauser Effects will be used to obtain structural information on a wide variety of molecules. In addition, the measurement of T_1, T_1 and T_2 relaxation times will be performed on projects involving the study of synthetic polymers and biopolymers. The article will also be used in the course Chem 695 (Research and Thesis) and Chem 895 (Doctoral Research and Dissertation) for educational purposes. Application received by Commissioner of Customs: July 21, 1980.

(Catalog of Federal Domestic Assistance Program No. 11.105, Importation of Duty-Free Educational and Scientific Materials.)

Stanley P. Kramer,

Acting Director, Statutory Import Programs Staff.

[FR Doc. 80-24741 Filed 8-14-80; 8:45 am]

BILLING CODE 3510-25-M

Importers and Retailers' Textile Advisory Committee; Public Meeting

Pursuant to section 10(a)(2) of the Federal Advisory Committee Act, 5 U.S.C. App. (1976) notice is hereby given that a meeting of the Importers' and Retailers' Textile Advisory Committee will be held on September 3, 1980 at 10:30 a.m. in Room 6802, U.S. Department of Commerce, 14th and Constitution Avenue, NW., Washington, D.C. 20230.

The Committee was established by the Secretary of Commerce on August 13, 1963 to advise U.S. Government officials of the effects on import markets of cotton, wool and man-made fiber textile agreements.

The agenda for the meeting will be as follows:

1. Review of import trends.
2. Implementation of textile agreements.
3. Report on conditions in the domestic market.
4. Other business.

A limited number of seats will be available to the public on a first-come basis. The public may file written statements with the Committee before or after each meeting. Oral statements may be presented at the end of the meeting to the extent time is available.

Copies of the minutes of the meeting will be made available on written request addressed to the ITA Freedom of Information Control Desk, Room 3012, U.S. Department of Commerce, Washington, D.C. 20230.

Further information concerning the Committee may be obtained from Arthur Garel, Director, Office of Textiles and Apparel, U.S. Department of Commerce, Washington, D.C. 20230, telephone 202/377-5078.

Dated: August 12, 1980.

Arthur Garel,

Director, Office of Textiles and Apparel.

[FR Doc. 80-24738 Filed 8-14-80; 8:45 am]

BILLING CODE 3510-25-M

Management-Labor Textile Advisory Committee; Public Meeting

Pursuant to Section 10(a)(2) of the Federal Advisory Committee Act, 5 U.S.C. App. (1976), notice is hereby given that a meeting of the Management-Labor Textile Advisory Committee will be held on September 3, 1980 at 1:30 p.m. in Room 6802, U.S. Department of Commerce, 14th and Constitution Avenue, N.W., Washington, D.C. 20230.

The Committee was established by the Secretary of Commerce on October 18, 1961 to advise U.S. Government officials on problems and conditions in the textile and apparel industry and furnish information on world trade in textiles and apparel.

The agenda for the meeting will be as follows:

1. Review of import trends.
2. Implementation of textile agreements.
3. Report on conditions in the domestic market.
4. Other business.

A limited number of seats will be available to the public on a first-come basis. The public may file written statements with the Committee before or after each meeting. Oral statements may be presented at the end of the meeting to the extent time is available.

Copies of the minutes of the meeting will be made available on written request addressed to the ITA Freedom of Information Officer, International Trade Administration, Records Inspection Facility, Room 3012, U.S. Department of Commerce, Washington, D.C. 20230.

Further information concerning the Committee may be obtained from Arthur Garel, Director, Office of Textiles and Apparel, U.S. Department of Commerce, Washington, D.C. 20230, telephone 202-377-5078.

Dated: August 12, 1980.

Arthur Garel,

Director, Office of Textiles and Apparel.

[FR Doc. 24740 Filed 8-14-80; 8:45 am]

BILLING CODE 3510-25-M

National Oceanic and Atmospheric Administration, Gulf of Mexico Fishery Management Council; Public Meetings

AGENCY: National Marine Fisheries Service, NOAA.

SUMMARY: The Gulf of Mexico Fishery Management Council, established by Section 302 of the Fishery Conservation and Management Act of 1976 (Pub. L. 94-265), will meet to review status reports on development of fishery management plans; consider foreign fishing applications, if any; and conduct other fishery management business.

DATES: The meetings, which are open to the public, will convene on Wednesday, September 3, 1980, at 1:30 p.m., reconvene on Thursday, September 4, 1980, at 9 a.m., and adjourn both days at approximately 5 p.m.; on Friday, September 5, 1980, reconvene at 8:30 a.m., but adjourn at approximately 12 noon.

ADDRESS: The meetings will take place at the Sheraton-Crest Inn, 111 East First Street, Austin, Texas.

FOR FURTHER INFORMATION CONTACT: Gulf of Mexico Fishery Management Council, Lincoln Center, Suite 881, 5401 West Kennedy Boulevard, Tampa, Florida 33609, Telephone: (813) 338-2815.

Dated: August 12, 1980.

Robert K. Crowell,

Deputy Executive Director, National Marine Fisheries Service.

[FR Doc. 80-24826 Filed 8-14-80; 8:45 am]

BILLING CODE 3510-22-M

COMMITTEE FOR THE IMPLEMENTATION OF TEXTILE AGREEMENTS

Adjusting Import Restraint Levels for Certain Cotton Textile Products From Macau

August 12, 1980.

AGENCY: Committee for the Implementation of Textile Agreements.

ACTION: Deducting from the 1980 level established for Category 333/334/335 carryforward yardage of 4,657 dozen used during the twelve-month period which began on January 1, 1979.

(A detailed description of the textile categories in terms of T.S.U.S.A. numbers was published in the Federal Register on February 28, 1980 (45 FR 13172), as amended on April 23, 1980 (45 FR 27463)).

SUMMARY: The Bilateral Cotton, Wool and Man-Made Fiber Textile Agreement of March 3, 1975, as amended, between the Governments of the United States and Portugal which concerns textile products, produced or manufactured in Macau, provides, among other things, for designated percentage increases in certain specific category ceilings for carryforward during the agreement year. Carryforward is an amount borrowed from the level of restraint applicable to the affected category in the succeeding agreement year and, to the extent used, is deducted from that succeeding year's level. Pursuant to the terms of the bilateral agreement, the import level for combined category 333/334/335 is being reduced to account for carryforward used during the previous agreement period in the amount of 4,657 dozen. The adjusted twelve-month level will be 75,997 dozen.

EFFECTIVE DATE: August 18, 1980.

FOR FURTHER INFORMATION CONTACT: Ronald J. Sorini, International Trade Specialist, Office of Textiles and Apparel, U.S. Department of Commerce, Washington, D.C. 20230 (202-377-5423).

SUPPLEMENTARY INFORMATION: On January 30, 1980, a letter dated January 25, 1980 from the Chairman of the Committee for the Implementation of Textile Agreements to the Commissioner of Customs was published in the Federal Register (45 FR 6826), which established import restraint levels for certain specified categories of cotton and man-made fiber textile products, produced or manufactured in Macau, and exported to the United States during the twelve-month period which began on January 1, 1980. In the letter published below the Commissioner of Customs is directed in accordance with the bilateral agreement to reduce the twelve-month level of restraint previously established for combined category 333/334/335 to the 75,997 dozen. This level has not been adjusted for any imports after December 31, 1979. It will be so adjusted for the period which began on January 1, 1980 and extends through the effective date of this action.

Arthur Garel,

Acting Chairman, Committee for the Implementation of Textile Agreements.

August 12, 1980.

Commissioner of Customs,

Department of the Treasury, Washington, D.C.

Dear Mr. Commissioner: On January 25, 1980, the Chairman of the Implementation of Textile Agreements, directed you to prohibit entry for consumption, or withdrawal from warehouse for consumption during the twelve-month period beginning on January 1, 1980 and extending through December 31, 1980, of cotton textile products in combined categories 333/334/335, produced or manufactured in Macau, in excess of designated levels of restraint. The Chairman further advised you that the levels of restraint are subject to adjustment.[1]

Under the terms of the Arrangement Regarding International Trade in Textiles done at Geneva on December 20, 1973, as extended on December 15, 1977; pursuant to the Bilateral Cotton, Wool and Man-Made Fiber Textile Agreement of March 3, 1975, as amended between the Governments of the United States and Portugal; and in accordance with the provisions of Executive Order 11651 of March 3, 1972, as amended by Executive Order 11951 of January 6, 1977, you are directed to amend, effective on August 18, 1980, the twelve-month level established for combined categories 333/334/335 to the amount indicated:

Category	Adjusted 12-mo level of restraint (dozen)[2]
333/334/335	75,997

[2] The level of restraint has not been adjusted to reflect any imports after December 31, 1979.

The actions taken with respect to the Government of Portugal and with respect to the imports of cotton textile products from Macau have been determined by the Committee for the Implementation of Textile Agreements to involve foreign affairs functions of the United States. Therefore, the directions to the Commissioner of Customs, which are necessary to the implementation of such actions, fall within the foreign affairs exception to the rule making provisions of 5 U.S.C. 553. This letter will be published in the Federal Register.

Sincerely,

Arthur Garel,

Acting Chairman, Committee for the Implementation of Textile Agreements.

[FR Doc. 80-24739 Filed 8-14-80; 8:45 am]

BILLING CODE 3510-25-M

[1] The term "adjustment" refers to those provisions of the Bilateral Cotton, Wool and Man-Made Fiber Textile Agreement of March 3, 1975. As amended between the Governments of the United States and Portugal concerning textile products from Macau, which provide, in part, that: (1) within the aggregate and group limits, specific levels of restraint may be exceeded by designated percentages; (2) these levels may also be increased for carryover and carry forward up to 11 percent of the applicable category limits; and (3) administrative arrangements or adjustments may be made to resolve minor problems arising in the implementation of the agreement.

COMMITTEE FOR PURCHASE FROM THE BLIND AND OTHER SEVERELY HANDICAPPED

Procurement List 1980; Additions

AGENCY: Committee for Purchase from the Blind and Other Severely Handicapped.

ACTION: Additions to procurement list.

SUMMARY: This action adds to Procurement List 1980 commodities to be produced by workshops for the blind and other severely handicapped.

EFFECTIVE DATE: August 15, 1980.

ADDRESS: Committee for Purchase from the Blind and Other Severely Handicapped, 2009 14th Street North, Suite 610, Arlington, Va. 22201.

FOR FURTHER INFORMATION CONTACT: C. W. Fletcher (703) 557-1145.

SUPPLEMENTARY INFORMATION: On June 13, 1980 and May 30, 1980, the Committee for Purchase from the Blind and Other Severely Handicapped published notices (45 FR 40200 and 45 FR 36467) of proposed additions to Procurement List 1980, November 27, 1979 (44 FR 67925).

After consideration of the relevant matter presented, the Committee has determined that the commodities listed below are suitable for procurement by the Federal Government under 41 U.S.C. 46-48c, 85 Stat. 77.

Accordingly, the following commodities are hereby added to Procurement List 1980:

Class 7340

Flatware, Plastic, Picnic
7340-00-170-8374
7340-00-205-3187
7340-00-205-3342
(Requirements for GSA National Capital Region)

Class 8465

Strap, Webbing, Nylon, Waist with Lower Back Pad, LC-2
8465-01-075-8164

C. W. Fletcher,
Executive Director.

[FR Doc. 80-24698 Filed 8-14-80; 8:45 am]
BILLING CODE 6820-33-M

Procurement List 1980; Proposed Addition

AGENCY: Committee for Purchase from the Blind and Other Severely Handicapped.

ACTION: Proposed addition to procurement list.

SUMMARY: The Committee has received a proposal to add to Procurement List 1980 a commodity to be produced by workshops for the blind and other severely handicapped.

COMMENTS MUST BE RECEIVED ON OR BEFORE: September 17, 1980.

ADDRESS: Committee for Purchase from the Blind and Other Severely Handicapped, 2009 14th Street North, Suite 610, Arlington, Virginia 22201.

FOR FURTHER INFORMATION CONTACT: C. W. Fletcher, (703) 557-1145.

SUPPLEMENTARY INFORMATION: This notice is published pursuant to 41 U.S.C. 47(a)(2), 85 Stat. 77. Its purpose is to provide interested parties an opportunity to sumbit comments on the possible impact of the proposed action.

If the Committee approves the proposed additions, all entities of the Federal Government will be required to procure the commodity listed below from workshops for the blind or other severely handicapped.

It is proposed to add the following commodity to Procurement List 1980, November 27, 1979 (44 FR 67925):

Class 2090

Weight, Canvas Bag
2090-00-845-9150

C. W. Fletcher,
Executive Director.

[FR Doc. 80-24697 Filed 8-14-80; 8:45 am]
BILLING CODE 6820-33-M

COMMODITY FUTURES TRADING COMMISSION

Publication of and Request for Comment on Proposed Amendments to the Plywood Contract of the Chicago Board of Trade Having Major Economic Significance

The Commodity Futures Trading Commission, in accordance with section 5a(12) of the Commodity Exchange Act ("Act"), 7 U.S.C. 7a(12) (1976), as amended by the Futures Trading Act of 1978, Pub. L. No. 95-405, section 12, 92 Stat. 871 (1978), has determined that the proposed amendments set forth below to the Plywood Contract submitted by the Chicago Board of Trade, are of major economic significance. The proposed amendments to the Plywood Contract change each regulation which contains the term "Plywood" or "Plywood Shipping Certificate" to read "Western Plywood" or "Western Plywood Shipping Certificate", respectively and in addition, alter the pricing basis and delivery procedures of the Plywood Contract.

The amendment to the Plywood Contract are printed below, showing deletions in brackets and additions italicized:

1604.01 Unit of Trading—the unit of trading for *Western* Plywood shall be a [fifty foot box car with a nine foot or wider door loaded to full visible capacity] *lot* of 36 *double* banded units of 66 pieces each (2,376 pieces, 76,032 square feet). Bids and offers may be accepted in [box car lots] *a lot (36 double banded units of 66 pieces each)* or multiples thereof.

1606.01 Price Basis—All prices of *Western* Plywood shall be basis FOB [Portland, Oregon,] *regular mill or warehouse* in multiples of ten cents (10¢) per one thousand square feet. Contracts shall not be made on any other price basis.

1636.01A New Plywood Standard, PS 1-74—Upon the effective date of PS 1-74, and thereafter, Plywood meeting the amended standards and certified under these standards will be an acceptable shipment against all outstanding contracts. [In addition, Plywood meeting either standards and certified under either standards may be shipped in satisfaction of all Plywood Shipping Certificates registered, outstanding and delivered prior to April 1, 1975.] Only Plywood meeting the current standard may be shipped against *Western* Plywood Shipping Certificates registered, outstanding and delivered after April 1, 1975.

1644.01 Certificate Format—The following form of *Western* Plywood Shipping Certificate shall be used:

BOARD OF TRADE OF THE CITY OF CHICAGO WESTERN PLYWOOD SHIPPING CERTIFICATE FOR DELIVERY IN SATISFACTION OF CONTRACT FOR [BOXCAR] LOT OF WESTERN PLYWOOD. This certificate not valid unless registered by the Registrar of the Board of Trade of the City of Chicago.

(Shipper) _____
(Mill or warehouse location) _____

Shipper shall assess a premium charge of $1.65 for each day a *Western* Plywood Shipping Certificate is outstanding starting the day after date of registration by Registrar and continuing through the business day following receipt of loading orders.

Premium charges must be paid every three months after date of registration or registration shall be cancelled on request of issuer.

For value received and receipt of this document properly endorsed and lien for payment of premium charges and upon payment of freight in accordance with the provisions of Regulation 1680.01(d), the undersigned Shipper, regular for delivery under the Rules and Regulations of the Board of Trade of the City of Chicago hereby agrees to delivery [into a boxcar] 2,376 panels (76,032 square feet) of Plywood conforming to the standards of the Board of Trade of the City of Chicago and ship said Plywood in accordance with orders of lawful owner of this document and in accordance with Rules and Regulations of the Board of Trade of the City of Chicago.

1649.01 Billing—[All loadings of Plywood against Plywood Shipping Certificates shall be FOB sellers' boxcars. Shipment shall be via railroad and shipper shall prepay freight to owner's declared destination in Minnesota, Iowa, that portion of Missouri in Western Trunk Line Territory, or in the continental United States east of the Mississippi River, charging owner the lowest lawful carload freight rate from Portland, Oregon, to owners' declared destination that is applicable based on established industry weights.]

All loadings of Plywood against Western Plywood Shipping Certificates shall be basis free on board (FOB) railcar or truck at the mill or warehouse stated on the certificate. If not otherwise specified, shipment shall be via railroad with seller providing boxcar and seller shall prepay freight to owner's declared destination, charging the owner the lowest applicable carload rate from the shipper's mill or warehouse to the owner's declared destination based on established mill or

warehouse weights of the Plywood in effect at time of shipment. If owner elects to take delivery via truck, owner shall provide truck.

1680.01 Loading and Shipping of *Western* Plywood against *Western* Plywood Shipping Certificates—

(f) Shipper may elect to have shipment made from regular shipping plants or warehouses other than his own. The shipper shall remain fully and directly responsible to the owner for complete conformity of such shipments to the provisions of the shipping certificate, the futures contract, and the Rules and Regulations of the Board of Trade.

(1) In the case of rail shipments, if the shipper elects to pass its obligation to another regular shipping location, the cost freight to the owner will be the lower of cost of freight from the shipping point designated on the shipping certificate to designation or the cost of freight from the actual shipping point to destination. In the event the actual cost of freight is less than the prepaid cost of freight, the shipper passing its obligation to another regular shipping location shall return to owner, not later than the eleventh business day following the business day on which loading orders are filed, the difference between the prepaid and actual cost of freight.

(2) In the case of truck shipments if the shipper elects to pass his obligation to another regular shipping location and the cost of freight from the actual shipping point to buyer's final destination exceeds the cost of freight from the shipping point designated on the shipping certificate to destination, the buyer and seller shall agree on a just compensation for the additional freight by 3 p.m. Chicago time on the business day following the business day on which loading orders were received. If no agreement can be reached, the shipper shall at his expense bring the Plywood to the location named on the shipping certificate for pickup by the buyer.

(g) [The shipper shall have loaded on track ready for railroad pickup, either at his own regular shipping plants or warehouses, or at the regular shipping plants or warehouses of other regular shippers, by 4:00 p.m. of the tenth business day following the business day on which loading orders are filed, all loading orders filed up to a maximum of 30% of the total number of a shipper's certificates outstanding and those yet unshipped against any prior loading orders. Additional loading orders which cumulatively exceed 30% up to a maximum of 70% of a shipper's total number of certificates outstanding and those yet unshipped against prior loading orders will be shipped no later than 5 business days following the completion of shipments against the first 30% of a shipper's total certificates outstanding and those yet unshipped against prior loading orders. Where several loading orders are filed on the same business day, shipper shall endeavor, to the maximum practical extent, to accord equitable treatment to all such loading orders when complying with the foregoing formula. In no instance will shipment extend beyond 20 business days from the date of the receipt of each loading order.]

(g) Shipper shall adhere to the following schedule in providing for the loading and departure of Plywood shipments against cancelled Western Plywood Shipping Certificates, either at his own regular shipping mill or warehouse, or at the regular mill or warehouse of another regular shipper.

(1) By 4:00 p.m. on the tenth business day following the business day on which loading orders are filed, all loading orders filed upon to a maximum of 30% of the total number of a shipper's certificates outstanding and those yet unshipped against any prior loading orders.

(2) By 4:00 p.m. on the fifth business day following the completion of shipments against the first 30% of a shipper's total certificates outstanding and those yet unshipped against prior loading orders, additional loading orders which cumulatively exceed 30% up to a maximum of 70% of a shipper's total number of certificates outstanding and those yet unshipped against prior loading orders.

(3) By 4:00 p.m. of the fifth business day following the completion of shipments against the first loading orders, additional loading orders which cumulatively exceed 30% up to a maximum of 70% of a shipper's total number of certificates outstanding and those yet unshipped against prior loading orders.

(4) Where several loading orders are filed on the same business day, shipper shall endeavor, to the maximum practical extent, to accord equitable treatment to all such loading orders when complying with the foregoing schedule.

Shipper's obligation under this paragraph (g) shall be:

(a) in the case of rail delivery, to have Plywood loaded on track ready for railroad pickup; or

(b) in the case of truck delivery, to specify shipping interval so that the last day of such interval adheres to the above schedule.

(h) [Shipper shall provide the owner, not later than noon of the business day following the day each car is loaded, the date, the point of origin, car number and exact railroad routing of said car. Shipper shall furnish a copy of the bill of lading to the owner within five business days.]

In the case of a shortage of boxcars at the shipper's location, the shipper should deliver the Plywood to the owner's declared destination, by any means available, charging the owner the lowest applicable rail carload rate from the shipper's mill or warehouse to the owner's declared destination based on established mill or warehouse weights of the Plywood in the effect at time of shipment and per Regulation 1680.01(f). Shortage of boxcars does not excuse the shipper for failure to perform.

(i) Shipper shall be liable for any monetary damages sustained by owner by reason of shipper's failure to perform in accordance with the provisions of this Regulation 1680.01, and may also be subject to penalties determined by the Board of Trade [A shortage of boxcars shall not excuse the shipper for failure to perform.] Owner shall be liable for monetary damages sustained by shipper, and subject to penalties, by reason of owner's failure to perform in accordance with this Regulation. Damages and Penalties are to be determined by the Arbitration Committee, or, if the parties do not agree to arbitration, then by the Plywood Committee on the basis of a hearing.

(1) [When loading against Plywood Shipping Certificates that were exchanged for 69,120 square feet certificates, a Regular Shipper may load a 50 ft. car with 36 units of 60 pieces each plus 12 units of 18 pieces each for a total of 2,376 pieces.

If the Shipper elects to load in this manner the owner must be notified prior to loading, and a discount of 50¢ per 1,000 square feet must be credited to the account of the owner.]

1680.02 Loading and Shipment of Plywood by Rail.

(a) If certificate owner has declared rail delivery, loading of Plywood against Western Plywood Shipping Certificates shall be in boxcars furnished by the seller. Each boxcar shall be a fifty foot boxcar with a nine foot or wider door.

(b) Certificate owner shall furnish detailed shipping instructions including a declared destination and routing for each car to be shipped when he files loading orders with shipper. Owner may change the declared destination or routing of any car at any time prior to loading of said car.

(c) Shipper shall prepay freight to owner's declared destination, charging the owner the lowest applicable carload

rate from the shipper's mill or warehouse to the owner's declared destination based on established mill weights of the Plywood in effect at that time.

(d) Shipper shall provide the owner, not later than noon on the business day following the day each car is loaded, the date, the point of origin, car number and exact railroad routing of said car. The shipper shall furnish a copy of the bill of lading to the owner within seven business days.

1680.03 Loading and Shipment of Plywood by Truck—

(a) If certificate owner has declared truck delivery, loading of Plywood against Western Plywood Shipping Certificate shall be FOB trucks furnished by the buyer. Trucks must be flatbed trucks and be in compliance with the rules of the appropriate governmental body to transport Plywood.

(b) By 3:30 p.m. Chicago time on the business day following the day on which a shipping certificate is cancelled and surrendered, shipper shall notify certificate owner of the shipping interval of five consecutive business days. the first day of such interval may be no earlier than the sixth business day following notification of such interval. If, pursuant to Regulation 1680.01 (f) or (i), shipper has shipment made from regular shipping plants or warehouses other than his own, he shall notify certificate owner of this together with notification of shipping interval.

(c) If trucks sufficient to completely load Plywood to be shipped do not arrive at shipping plant or warehouse ready to be loaded within such interval, owner shall pay shipper a penalty of $100 per certificate for each business day between the last day of the specified interval and arrival of sufficient trucks at shipping point. If trucks arrive within the specified interval, and between the hours of 8 a.m. and 3 p.m. local time, loading shall begin immediately upon arrival of trucks.

(d) Shipper shall furnish each truck driver with a statement certifying time of arrival, beginning of loading and completion of loading. Shipper shall sign statement and the truck driver shall sign statement leaving two copies with the shipper. The truck driver's copies shall then be endorsed by both the truck driver and the owner upon arrival at destination. Owner shall keep one copy and the truck driver the other.

1681.01 Conditions of Regularity—

(10) [The Shipper must comply in all aspects with the May 20, 1975 conversion formula as amended November 18, 1975.]

No warehouse shall be deemed suitable to be declared regular if its location, accessibility, tariffs, insurance rates or other qualifications shall depart from uniformity to the extent that its receipt as tendered in satisfaction of futures contracts will unduly depress the value of futures contracts or impair the efficacy of futures trading in this market, or if the warehouseman operating such warehouses engages in unethical or inequitable practices, or if the warehouseman fails to comply with any laws, Federal or State, or Rules and Regulations promulgated under those laws.

(11) The shipper shall provide to the Exchange the established weights for each mill or warehouse and a full explanation of how those weights are determined. The shipper shall be responsible for showing that the mill or warehouse weights meet its standards on request from the Exchange. The shipper is to notify the Exchange when current average weights of any mill or warehouse are greater (lesser) than 7.5 percent of established weights in effect at that time.

1685.01 Application for Declaration of Regularity—

Conditions of Regularity

1. The shipper must:

(5) provide to the Exchange the established weights of each mill or warehouse and an explanation of how those weights are determined. The shipper shall be responsible for showing that the mill or warehouse weights meet its standards on request from the Exchange. The shipper is to notify the Exchange when current average weights of any mill or warehouse are greater (lesser) than 7.5 percent of established weights in effect at that time.

Any person interested in submitting written data, views, or arguments on these rules should send his comments by September 15, 1980 to Ms. Jane Stuckey, Secretariat, Commodity Futures Trading Commission, 2033 K Street, NW, Washington, D.C. 20581.

Issued in Washington, D.C., on August 12, 1980.

Jane K. Stuckey,

Secretary of the Commission.

[FR Doc. 80-24814 Filed 8-14-80; 8:45 am]

BILLING CODE 6351-01-M

DEPARTMENT OF DEFENSE

Corps of Engineers; Department of the Army

Intent To Prepare a Draft Environmental Impact Statement for Carlyle Lake and Lake Shelbyville, Ill.

AGENCY: St. Louis District, U.S. Army Corps of Engineers.

ACTION: Notice of intent to prepare a draft environmental impact statement for Carlyle Lake and Lake Shelbyville, Ill.

SUMMARY: *1. Proposed Action:* The proposed action is to prepare a Draft Environmental Impact Statement for the Carlyle Lake and Lake Shelbyville, Illinois, General Investigation study concerning the construction and operation of hydroelectric power plants at these facilities. These measures will be evaluated to determine the feasibility of dependable power.

2. Alternatives: Alternatives will include run of the river hydropower, fluctuating pool levels, changing the height of the existing dam, and no action. These alternatives will include viewing the power facilities as individual sites and as a system including both sites operated in conjunction with each other.

a. Public Involvement Program: The public involvement program began with the notification of the initiation of the study to Federal, state, and local governments and agencies in February 1980. The initial public meeting, to be held August 1980, is two-fold: first, to obtain information from the public regarding their views and concerns and second, to begin the scoping process as outlined by the Council of Environmental Quality (29 November 1978).

b. Significant Issues: Significant issues addressed in the Draft Environmental Impact Statement will include water quality, the preservation of wildlife habitat, historical and archeological sites, water releases and its impact on downstream flow, endangered species, and an analysis of the effects on the environment regarding the economically justified alternatives.

c. Lead Agency and Cooperating Agency Responsibilities: The St. Louis District Army Corps of Engineers is the lead agency responsible for the preparation of the Draft Environmental Impact Statement. Agencies actively participating in the planning process are the U.S. Fish and Wildlife Service and the Illinois Department of Conservation. Coordination will be initiated and maintained with other Federal, state and local agencies.

d. Environmental Review and Consultation Requirements: The completed Draft Environmental Impact Statement will be circulated to the general public (i.e., those who have expressed interest), as well as to the appropriate local, state, and Federal agencies and representatives of environmental groups. This Draft Environmental Impact Statement will contain records of compliance with designated consultation requirements found applicable during the course of this study.

4. Scoping Meeting: The scoping process will be initiated in conjunction with the initial public meeting. This scoping process will continue throughout the duration of the study effort, as it is to be incorporated into the total planning process.

5. Draft Environmental Impact Statement Preparation: The Draft Environmental Impact Statement is tentatively scheduled to be completed in 1983.

ADDRESS: Questions concerning the proposed action and the Draft Environmental Impact can be answered by: Mr. Jack F. Rasmussen, Chief, Planning Branch, U.S. Army Engineer District, St. Louis, 210 Tucker Boulevard, North, St. Louis, Missouri 63101.

Dated: August 4, 1980.

Robert J. Dacey,

Colonel, CE, District Engineer.

[FR Doc. 80-24839 Filed 8-14-80; 8:45 am]

BILLING CODE 3710-GS-M

Defense Investigative Service

Privacy Act of 1974; Corrections to Systems of Records

AGENCY: Defense Investigative Service.

ACTION: Notice of change of address for system of records.

SUMMARY: The Defense Investigative Service has moved from the Forrestal Building; 1000 Independence Avenue, Washington, D.C. 20314, to Buzzard Point, 1900 Half St., S.W., Washington, D.C. 20324, and proposed to correct the addresses listed in the nineteen (19) systems it maintains subject to the Privacy Act 1974. The specific address changes are set forth below.

FOR FURTHER INFORMATION CONTACT: Juanita E. Morey, Assistant Record Manager, Defense Investigative Service/D0243, Telephone: 693-5013.

SUPPLEMENTARY INFORMATION: The Defense Investigative Service systems of records notices inventory subject to the Privacy Act of 1974 Pub. L. 93-579 (5 U.S.C. 552a) have been published to date in the Federal Register as follows:

FR Doc. 79-37052 (44 FR 74764) December 17, 1979

The proposed corrections are not within the purview of the provisions of 5 U.S.C. 552a(0) of the Act which requires the submission of a new or altered system report.

M. S. Healy,

OSD Federal Register Liaison Officer, Washington Headquarters Services, Department of Defense.

August 11, 1980.

Amendments

SYSTEM NAME:

V1-01 Privacy and Freedom of Information Request Records

SYSTEM LOCATION:

Information and Legal Affairs Office, Defense Investigative Service, 1900 Half St., S.W. Washington, D.C. 20324.

* * * * *

NOTIFICATION PROCEDURE:

Requests should be addressed to the SYSMANAGER. The full name, date, and place of birth, Social Security Number and the approximate date of earlier requests are necessary for retrieval of information. Information and Legal Affairs Office, Defense Investigative Service, 1900 Half St., S.W. Washington, D.C. 20324 may be visted by personnel making inquiries regarding this system. A check of personal identification will be required of all vistors making inquiries for personal records.

* * * * *

SYSTEM NAME:

V1-02 DIS Personnel Locator System

SYSTEM LOCATION:

Primary System-Administrative Division, Director for Management and Resources, Defense Investigative Service, 1900 Half St., S.W., Washington, D.C. 20324.

Decentralized Segments-Field units including centers.

* * * * *

SYSTEM MANAGER(S) AND ADDRESS:

Administrative Division, Defense Investigative Service, 1900 Half St., S.W. Washington, D.C. 20324.

* * * * *

SYSTEM NAME:

V2-01 Inspector General Complaints

SYSTEM LOCATION:

Inspector General, Defense Investigative Service, 1900 Half St., S.W., Washington, D.C. 20324.

* * * * *

SYSTEM MANAGER(S) AND ADDRESS:

Inspector General, Defense Investigative Service, 1900 Half St., S.W., Washington, D.C. 20324.

NOTIFICATION PROCEDURE:

Information may be obtained from: Information and Legal Affairs Office, Defense Investigative Service, 1900 Half St., S.W., Washington, D.C. 20324.

RECORD ACCESS PROCEDURES:

Requests from individuals should be addressed to Defense Investigative Service, 1900 Half St., S.W., Washington, D.C. 20324.

Written request for information should contain the full name of the individual, current address and telephone number, and the identity of the DIS element with which affiliated. Visits are limited to the Information and Legal Affairs Office.

For personal visits, a check of personal identification will be required.

* * * * *

SYSTEM NAME:

V4-01 Civilian Employee Personnel Records.

SYSTEM LOCATION:

Civilian Personnel Branch, Defense Investigative Service, P.O. Box 1211, Baltimore, MD 21203, and Civilian Personnel Division, Defense Investigative Service, 1900 Half St., S.W., Washington, D.C. 20324.

* * * * *

SYSTEM MANAGER(S) AND ADDRESS:

Civilian Personnel Officer, Defense Investigative Service, 1900 Half St., S.W., Washington, D.C. 20324 and Chief Civilan Personnel Branch, P.O. 1211, Baltimore, MD 21203.

* * * * *

CONTESTING RECORD PROCEDURES:

The agency's rules for access to records and for contesting contents and appealing initial determination by the individual concerned may be obtained from the Information and Legal Affairs Office, Defense Investigative Service, 1900 Half St., S.W., Washington, D.C. 20324.

* * * * *

SYSTEM NAME:

V4-02 Optional Personnel Management Records (OPMR)

SYSTEM LOCATION:

Primary System-Director of Personnel and Security, Defense Investigative Service, 1900 Half St., S.W., Washington, D.C. 20324 and Civilian Personnel Branch, Defense Investigative Service,

P.O. Box 1211, Baltimore, MD 21203. Decentralized segments-Partial records are maintained at staff directorates, district headquarters, operational centers and field offices (see DoD appendix for addresses).

* * * * *

SYSTEM MANAGER(S) AND ADDRESS:

Director of Personnel and Security, Defense Investigative Service, 1900 Half St., S.W., Washington, D.C. 20324.

* * * * *

CONTESTING RECORD PROCEDURES:

The agency's rules for access to records and for contesting contents and appealing initial determinations by the individual concerned may be obtained from the Information and Legal Affairs Office, 1900 Half St., S.W., Washington, D.C. 20324.

* * * * *

SYSTEM NAME:

V4-04 Civilian Applicant Records

SYSTEM LOCATION:

Civilian Personnel Division, Defense Investigative Service, 1900 Half St., S.W., Washington, D.C. 20324.

Civilian Personnel Branch, Defense Investigative Service, P.O. Box 1211, Baltimore, MD 21203.

* * * * *

SYSTEM MANAGER(S) AND ADDRESS:

Civilian Personnel Officer, Defense Investigative Service, 1900 Half St., S.W., Washington, D.C. 20324 and Chief, Civilian Personnel Branch, Defense Investigative Service, P.O. Box 1211, Baltimore, MD 21203.

* * * * *

CONTESTING RECORD PROCEDURES:

The agency's rules for access to records and for contesting contents and appealing initial determinations by the individual concerned may be obtained from the Information and Legal Affairs Office, Defense Investigative Service, 1900 Half St., S.W., Washington, D.C. 20324.

* * * * *

SYSTEM NAME:

V4-05 Military Personnel Management Information System (MILPERS)

* * * * *

SYSTEM MANAGER(S) AND ADDRESS:

Director of Personnel and Security, Defense Investigative Service, 1900 Half St., S.W., Washington, D.C. 20324.

* * * * *

CONTESTING RECORD PROCEDURES:

The agency's rules for access to records and for contesting contents and appealing initial determinations by the individual concerned may be obtained from the Information and Legal Affairs Office, Defense Investigative Service, 1900 Half St., S.W., Washington, D.C. 20324.

* * * * *

SYSTEM NAME:

V4-06 Civilian Personnel Management Information System (CPMIS).

* * * * *

SYSTEM MANAGER(S) AND ADDRESS:

Civilian Personnel Officer, Defense Investigative Service, 1900 Half St., S.W., Washington, D.C. 20324.

* * * * *

CONTESTING RECORD PROCEDURES:

The agency's rules for access to records and for contesting contents and appealing initial determinations by the individual concerned may be obtained from the Information and Legal Affairs Office, Defense Investigative Service, 1900 Half St., S.W., Washington, D.C. 20324.

* * * * *

SYSTEM NAME:

V4-07 Adverse Action Grievance Files and Administrative Appeals.

SYSTEM LOCATION:

Civilian Personnel Branch, Defense Investigative Service, P.O. Box 1211, Baltimore, MD 21203 and Civilian Personnel Division, Defense Investigative Service, 1900 Half St., S.W., Washington, D.C. 20324.

* * * * *

SYSTEM MANAGER(S) AND ADDRESS:

Civilian Personnel Officer, Defense Investigative Service, 1900 Half St., S.W., Washington, D.C. 20324 and Chief, Civilian Personnel Branch, Defense Investigative Service, P.O. Box 1211, Baltimore, MD 21203.

* * * * *

CONTESTING RECORD PROCEDURES:

The agency's rules for access to records, contesting contents, and appealing initial determinations by the individual concerned may be obtained from the Information and Legal Affairs Office, Defense Investigative Service, 1900 Half St., S.W., Washington, D.C. 20324.

* * * * *

SYSTEM NAME:

V4-08 EEO Complaints.

SYSTEM LOCATION:

Primary System: Director of Personnel and Security, Defense Investigative Service, 1900 Half St., S.W., Washington, D.C. 20324 and Civilian Personnel Branch, Defense Investigative Service, P.O. Box 1211, Baltimore, MD 21203. Decentralized Segments at Districts DIS Headquarters and centers by EEO Counselors.

* * * * *

SYSTEM MANAGER(S) AND ADDRESS:

Director of Personnel and Security, Defense Investigative Service, 1900 Half St., S.W., Washington, D.C. 20324.

* * * * *

RECORDS ACCESS PROCEDURES:

Requests from individuals for access to centralized records should be addressed to Defense Investigative Service, Director of Personnel and Security, 1900 Half St., S.W., Washington, D.C. 20324. Written requests for information should contain the full name of the individual, current address and telephone number, and the name of the individual that appears on the desired file. Visits are limited to Information and Legal Affairs Office, Defense Investigative Service, 1900 Half St., S.W., Washington, D.C. 20324. For personal visits, a check of personal identification will be required. Access to decentralized segments (counseling records) by individuals concerned may be obtained locally.

CONTESTING RECORD PROCEDURES:

DIS rules for access to records and for contesting contents and appealing initial determinations by the individual concerned may be obtained from Information and Legal Affairs Office, Defense Investigative Service, 1900 Half St., S.W., Washington, D.C. 20324.

* * * * *

SYSTEM NAME:

V4-09 Merit Promotion Plan Records.

SYSTEM LOCATION:

Civilian Personnel Branch, Defense Investigative Service, P.O. Box 1211, Baltimore, MD 21203 and Civilian Personnel Officer, Defense Investigative Service, 1900 Half St., S.W., Washington, D.C. 20324.

* * * * *

SYSTEM MANAGER(S) AND ADDRESS:

Civilian Personnel Officer, Defense Investigative Service, 1900 Half St., S.W., Washington, D.C. 20324 and Civilian Personnel Branch, P.O. Box 1211, Baltimore, MD 21203.

* * * * *

CONTESTING RECORD PROCEDURES:

The agency's rules for access to records and for contesting contents and appealing initial determinations by the individual concerned may be obtained from the Information and Legal Affairs Office, Defense Investigative Service, 1900 Half St., S.W., Washington, D.C. 20324.

* * * * *

SYSTEM NAME:

V4-10 Incentive Awards.

SYSTEM LOCATION:

Civilian Personnel Office, Defense Investigative Service, 1900 Half St., S.W., Washington, D.C. 20324.

* * * * *

SYSTEM MANAGER(S) AND ADDRESS:

Civilian Personnel Office, Defense Investigative Service, 1900 Half St., S.W., Washington, D.C. 20324.

* * * * *

CONTESTING RECORD PROCEDURES:

The agency's rules for access to records and for contesting contents and appealing initial determinations by the individual concerned may be obtained from the Information and Legal Affairs Office, Defense Investigative Service, 1900 Half St., S.W., Washington, D.C. 20324.

* * * * *

SYSTEM NAME:

V5-01 Investigative Files System

SYSTEM LOCATION:

Defense Investigative Service, Investigative Files Division, P.O. Box 1211, Baltimore, MD 21203 has primary control over the system and is responsible for the maintenance of completed investigative records. The Special Investigations Center, 1900 Half St. SW., Washington, D.C. 20324 maintains limited categories of these records, DIS operational centers; District Offices; Field Offices; Resident Agencies, and various DIS headquarters staff elements originate and have temporary control over portions of records.

* * * * *

SYSTEM MANAGER(S) AND ADDRESS:

Director, Defense Investigative Service, 1900 Half St. SW., Washington, D.C. 20324.

NOTIFICATION PROCEDURE:

Requests should be addressed to Information and Legal Affairs Office, Defense Investigative Service, 1900 Half St. SW., Washington, D.C. 20324. The full name, date and place of birth, and social security account number are necessary for retrieval of information. More information or a notarized statement verifying the identity of requesters may be required. Information and Legal Affairs Office, 1900 Half St. SW., Washington, D.C. 20324 may be visited by personnel making inquiries regarding this system. A check of personal identification will be required of all visitors making such inquiries.

* * * * *

SYSTEM NAME:

V5-02 Defense Central Index of Investigations (DCII)

SYSTEM LOCATION:

Central Facility: Information Services Division, Personnel Investigations Center, P.O. Box 1211, Baltimore, MD 21203.

Remote Terminal Locations: Crime Records Directorate, U.S. Army Criminal Investigations Command, 2301 Chesapeake Avenue, Baltimore, MD 21222. Air Force of Special Investigations, Bolling AFB, Washington, D.C. 20332. Naval Investigative Service Headquarters, Hoffman Building 1, 2461 Eisenhower Ave., ATTN Code 30, Alexandria, VA 22331. Defense Industrial Security Clearance Office, P.O. Box 2499, Columbus, OH 43216 (DISCO). U.S. Army Investigative Records Repository, Bldg. 4452, Fort Meade, MD 20755. DIS Personnel Investigations Center, P.O. Box 1211, Baltimore, MD 21203. U.S. Army Central Personnel Clearance Facility, Bldg., 4452, Fort Meade, MD 20755. Defense Intelligence Agency, Room 2B535, ATTN RSS-3A, Pentagon, Washington, D.C. 20301. HQ Air Force Security Clearance Office, Room 5D-460, Pentagon, Washington, D.C. 20330. Office of Personnel Management, Division of Personal Investigations, Investigative Support Branch, Boyers, PA 16016.

* * * * *

SYSTEM MANAGER(S) AND ADDRESS:

Director, Defense Investigative Service, 1900 Half St. SW., Washington, D.C. 20324.

NOTIFICATION PROCEDURE:

Information may be obtained from: Information and Legal Affairs Office, Defense Investigative Service, 1900 Half St. SW., Washington, D.C. 20324. Information required: Full name and all maiden and alias names under which files may be maintained and personal identifiers listed under RETRIEVABILITY. Note, Social Security Account Numbers may be necessary for positive identification of certain records. Office which may be visited: Information and Legal Affairs Office, 1900 Half St. SW., Washington, D.C. 20324. Proof of Identity: Check of personal documents.

* * * * *

SYSTEM NAME:

V5-03 National Agency Check (NAC) Case Control System (NCCS)

* * * * *

SYSTEM MANAGER(S) AND ADDRESS:

Director, Defense Investigative Service, 1900 Half St. SW., Washington, D.C. 20324.

NOTIFICATION PROCEDURE:

Information may be obtained from: Information and Legal Affairs Office, Defense Investigative Service, 1900 Half St. SW., Washington, D.C. 20324. Information required: Full name and all maiden or alias names under which files may be maintained. Personal Identifiers which include date and place of birth, social security number and last four digits of military service number. Office which may be visited: Information and Legal Affairs Office, 1900 Half St. SW., Washington, D.C. 20324. Proof of Identity: Routine check of personal documents.

* * * * *

SYSTEM NAME:

V5-04 Defense Case Control System (DCCS)

* * * * *

SYSTEM MANAGER(S) AND ADDRESS:

Director, Defense Investigative Service, 1900 Half St. SW., Washington, D.C. 20324.

NOTIFICATION PROCEDURE:

Information may be obtained from: Information and Legal Affairs Office, Defense Investigative Service, Washington, D.C. 20324. Information required: Full name and all maiden or alias names under which files may be maintained. Personal identifiers which include date and place of birth, social security number and last four digits of military service number. Office which may be visited: Information and Legal Affairs Office, Defense Investigative Service, 1900 Half St. SW., Washington, D.C. 20324. Proof of Identity: Routine check of personal documents.

* * * * *

SYSTEM NAME:

V5-05 Subject and Reference Locator Records

* * * * *

SYSTEM MANAGER(S) AND ADDRESS:

Director, Defense Investigative Service, 1900 Half St. SW., Washington, D.C. 20324.

NOTIFICATION PROCEDURE:

Requests should be addressed to Information and Legal Affairs Office, Defense Investigative Service, 1900 Half St. SW., Washington, D.C. 20324. The full name, date and place of birth, social security account number, military service numbers are required and the name and location of the post, base, or station and periods of assignment or employment so that a thorough search can be conducted. A notarized statement verifying the identity of requestors is required. Information and Legal Affairs Office, Defense Investigative Service, Washington, D.C. 20324 may be visited by personnel making inquiries regarding this system. A check of personal identification will be required of all visitors making such inquiries.

* * * * *

SYSTEM NAME:

V6-01 Personnel Security Files

SYSTEM LOCATION:

Primary System—Defense Investigative Service, Security Division, 1900 Half St. SW., Washington, D.C. 20324. Decentralized System—Partial records are maintained at working locations as a part of the Optional Personnel Management Record System described separately in this notice.

* * * * *

SYSTEM MANAGER(S) AND ADDRESS:

Security Division, Defense Investigative Service, 1900 Half St. SW., Washington, D.C. 20324.

NOTIFICATION PROCEDURE:

Information regarding the primary system may be obtained from: Security Officer, Defense Investigative Service, 1900 Half St. SW., Washington, D.C. 20324. Record access procedures:

Access to the decentralized records may be obtained at any time. Requests for access to the primary system from individuals should be addressed to: Information and Legal Affairs Office, Defense Investigative Service, 1900 Half St. SW., Washington, D.C. 20324. Written requests for information should contain the full name of the individual, current address and telephone number. Visits are limited to Information and Legal Affairs Office, Defense Investigative Service, 1900 Half St. SW., Washington, D.C. 20324. For personal visits a check of personal documents will be conducted.

* * * * *

SYSTEM NAME:

V6-02 Special Compartmented Intelligence (SCI) Access File

SYSTEM LOCATION:

Security Division, Defense Investigative Service, 1900 Half St. SW., Washington, D.C. 20324.

* * * * *

SYSTEM MANAGER(S) AND ADDRESS:

Security Division, Defense Investigative Service, 1900 Half St. SW., Washington, D.C. 20324.

NOTIFICATION PROCEDURE:

Information may be obtained from SYSMANAGER: Security Division, Defense Investigative Service, 1900 Half St. SW., Washington, D.C. 20324.

RECORD ACCESS PROCEDURES:

Requests from individuals should be addressed to: Information and Legal Affairs Office, Defense Investigative Service, 1900 Half St. SW., Washington, D.C. 20324. Written requests for information should contain the full name of the individual, current address and telephone number. Visits are limited to Information and Legal Affairs Office, Defense Investigative Service, 1900 Half St. SW., Washington, D.C. 20324

* * * * *

[FR Doc. 80-24783 Filed 8-14-80; 8:45 am]
BILLING CODE 3810-70-M

DEPARTMENT OF ENERGY

Compliance With the National Environmental Policy Act (NEPA); Intent To Prepare Environmental Impact Statement—Near-Term Acquisition of Away-From-Reactor (AFR) Spent Fuel Storage Facilities

AGENCY: Department of Energy.

ACTION: Notice of intent to prepare an environmental impact statement (EIS) pertaining to the proposed acquisition by the Department of Energy (DOE) of facilities for the near-term storage of spent nuclear fuel from commercial power reactors.

SUMMARY: DOE announces its intent to prepare an EIS, in accordance with Section 102(2)(C) of the NEPA, to provide environmental input into the choice of alternatives for providing the AFR storage capacity that will be required prior to the time a new spent fuel storage facility could be built and licensed. By proposing to acquire existing commercial AFR facilities, the U.S. Government plans to implement its announced Spent Fuel Storage Policy under which the U.S. Government would offer to accept title to domestic spent fuel and limited amounts of foreign commercial power reactor spent fuel and charge the fuel owner a fee for the services rendered by the Government. Facilities which could allow DOE to meet this need are located at West Valley, New York; Morris, Illinois; and Barnwell, South Carolina. The implementation of the Spent Fuel Policy is dependent on the Congressional approval of pending legislation to provide DOE with the necessary authority.

Interested agencies, organizations, and the general public desiring to submit comments or suggestions for consideration in connection with the preparation of this EIS are invited to do so. Written comments or suggestions which would assist DOE in identifying significant environmental issues and the appropriate scope of the EIS are requested. No public scoping meeting has been scheduled. However, DOE will consider the need for such a meeting after consideration of written comments received in response to this Notice of Intent. Upon completion of the draft EIS, its availability will be announced in the Federal Register, and hearings held at the appropriate locations. Comments on the draft will be solicited and will be considered in preparing the final EIS.

ADDRESS: Written comments or suggestions on the scope of the environmental impact statement may be submitted to: Mr. Michael J. Lawrence, Director, ATTN: DEIS for NTAFR, Office of Transportation and Fuel Storage, U.S. Department of Energy, Washington, D.C. 20545.

For general information on DOE's EIS process contact: NEPA Affairs Division, Office of the Assistant Secretary for Environment, U.S. Department of Energy, ATTN: Mr. Richard P. Smith, Room 4G-064, Forrestal Building, 1000 Independence Avenue, S.W., Washington, DC 20585 (202)-252-4610.

DATE: Written comments postmarked on or before September 15, 1980, will be considered in the preparation of the EIS. Comments postmarked after that date will be incorporated to the extent practical.

Background Information

Spent fuel removed from a nuclear power reactor contains unfissioned nuclear fuel together with radioactive fission products. On April 7, 1977, President Carter announced that the U.S. would indefinitely defer reprocessing of spent fuel to recover the

unfissioned fuel while the U.S. and other countries evaluate alternative fuel cycles and processes which may reduce risks of nuclear weapons proliferation. Most nuclear power plants were designed with reprocessing in mind and have limited spent fuel storage capacity.

In October 1977, DOE announced a Spent Fuel Policy for nuclear power reactors. Under this policy, as approved by the President, U.S. utilities could transfer spent fuel to the U.S. Government in exchange for payment of a fee. The U.S. Government also would be prepared to accept a limited amount of spent fuel from foreign sources when such action would contribute to meeting nonproliferation goals. Under the new policy, spent fuel transferred to the U.S. Government would be delivered to a U.S. Government-owned storage site at the user's expense. In February 1979 DOE submitted the Spent Nuclear Fuel Act of 1979 to Congress. The Act would give DOE authority to acquire or construct storage capacity, to accept fuel for storage and disposal, and to establish and collect a charge for providing these services.

The Department has developed a NEPA implementation plan for the AFR storage program based on the "tiered" approach, which is designed to eliminate repetitive discussions of the same issues and to focus on the actual issues ripe for decision at each level of environmental review. Under this approach, general matters are covered in generic EIS's. Subsequent narrower EIS's or environmental assessments (EA's) incorporate by reference the analysis of general issues and concentrate only on the issues specific to the subsequent decision.

The proposed Federal policy of offering AFR storage to utilities and foreign governments was the subject of the "Final Environment Impact Statement U.S. Spent Fuel Policy" (DOE/EIS-0015) issued by DOE in May 1980. This generic study concluded that the environmental and public health effects attributable to storage of fuel over the full range of alternatives considered are relatively small compared with available resources or background exposure of the population from natural radiation sources.

Following publication of the final generic EIS, the Department of Energy has made the decision to implement the U.S. Spent Fuel Policy (announced in October 1977) by the U.S. Government offering to accept title to domestic spent fuel and limited amounts of foreign commercial spent power reactor fuel and charging the fuel owner a fee for the services rendered by the Government. The implementation of the Spent Fuel Policy is subject to the approval of authorizing legislation by Congress. DOE will continue to support the enactment of such legislation and will pursue activities to support the implementation of the Spent Fuel Policy. This Record of Decision was published in the Federal Register by DOE on July 17, 1980 (45 FR 47903).

The environmental impacts of spent fuel handling and storage also were examined generically by the U.S. Nuclear Regulatory Commission (NRC) with a view toward developing long-range policy. The results of their study were published on August 1979 as the "Final Generic Environmental Impact Statement on Handling and Storage of Spent Light Water Power Reactor Fuel" (NUREG-0575). The NRC staff concluded that new storage capacity, in addition to that which will be available in existing reactor basins, is needed in order to avoid reactor shutdowns. They also determined that storage of spent fuel in water pools (either at the reactors or at AFR facilities) has an insignificant effect on the environment.

The next step in the "tiered" approach to the NEPA process is an EIS on the proposed acquisition of facilites to meet near-term storage demands. In response to a Congressional directive, in March 1980 DOE published a report entitled "Department of Energy Study on Spent Nuclear Fuel Storage" (DOE/SR-0004) which describes the near-term need for AFR storage capacity and the way the need could be met. As noted in that report, since it is not possible to build and license a new AFR before about 1989, DOE is considering the acquisition of existing commercial facilities which are capable of storing spent fuel. Three existing commercial facilities that are considered reasonable alternatives were designed and built to reprocess fuel. Reprocessing has been indefinitely deferred; however, the facilities have capacity to store spent fuel. The three facilities are the following:

Allied General Nuclear Services (AGNS)-Barnwell Nuclear Fuel Plant (BNFP). Located at Barnwell, South Carolina, and owned by Allied General Nuclear Service. The existing storage pool, which has never been used, could receive and store 400 metric tons of uranium (MTU) in spent fuel. The storage capacity could be increased by "reracking" (use of storage racks of a different design or arrangement than those considered in the original design) to 1750-2250 MTU capacity.

General Electric (GE)-Morris Facility. Located at Morris, Illinois, and owned by General Electric. About 350 MTU of fuel currently is in storage, and additional space is available for about 350 MTU of fuel. Morris could be reracked to a total capacity of 1100 MTU, giving an available capacity of 750 MTU.

Nuclear Fuel Services (NFS)-Western New York Nuclear Service Center (WNYNSC). Located at West Valley, New York, and owned by Nuclear Fuel Services. This plant is a reprocessing facility that was operated between 1966 and 1972. Although the fuel reprocessing operations are shutdown, the fuel storage pool contains about 165 MTU of fuel and has additional space for about 85 MTU. Preliminary studies by DOE indicate that WNYNSC could possibly be reracked to provide up to 1500 MTU capacity.

Storage of spent fuel in any of the AFR facilities would only be temporary until a repository is available for the ultimate disposal of the spent fuel. Current DOE projections show the repository beginning operations in the late 1990's.

The purpose of this Notice is to present pertinent background information regarding the proposed scope and content of the EIS and to solicit comments and suggestions for consideration in its preparation. This EIS will examine the environmental consequences that would result if the Federal Government were to acquire any or all of the three facilities and use them for storage of spent fuel. In the event that DOE is authorized to implement its spent fuel policy, the results of analysis to be presented in the near-term EIS will be considered by DOE in deciding how to proceed.

In addition, the EIS wil analyze the impact of not providing AFR capacity to satisfy the projected near-term AFR storage requirements but rather delaying implementation of the program until new construction can be completed. Department decisions for which this EIS will provide environmental input are: (i) acquisition of one or more of the existing commercial facilities, (ii) adaptation of facilities through reracking, and (iii) submission of licensing applications to NRC to operate facilities as AFR facilities.

Identification of Environmental and Socioeconomic Issues: As a minimum, the issues listed below will be analyzed during preparation of the EIS (the list is intended neither to be all inclusive nor a predetermination of impacts):

1. The effects on the environments of the AFR storage facilities that would result from modifying the fuel storage racks to increase storage capacities.

2. The exposure of the public to radiation as a result of routine releases of radioactivity from operation of AFR storage facilities.

3. The risk of exposing the public to radiation as a result of accidents at the AFR facilities.

4. The occupational radiation exposure of employees of the AFR facilities.

5. The risks to the public and to employees from accidents not involving radioactivity.

6. The effects on the public of transportation of spent fuel to and from the AFR facilities under normal circumstances and as a result of accidents.

7. The effects of nonradiological effluents on the environs of the facilities.

8. The probable and maximum lengths of time that interim storage in AFR water basins will be necessary or desirable and the environmental consequences thereof.

9. Compatibility with other activities ongoing or planned for the site of AFR facilities (such as interference with the waste solidification project at West Valley, New York).

Alternatives Including Proposed Action: The following alternatives will be included in the EIS:

1. "AGNS-GE-NFS" Alternative—Acquired rerack, and use all existing private facilities (AGNS, GE, NFS) for spent fuel storage.

2. "AGNS-GE" Alternative—Acquire, rerack, and use GE and AGNS.

3. "AGNS-NFS" Alternative—Acquire, rerack, and use AGNS and NFS.

4. "GE-NFS" Alternative—Acquire, rerack, and use GE and NFS.

5. "AFNS Only" Alternative—Acquire, rerack, and use AGNS only.

6. "GE Only" Alternative—Acquire, rerack, and use GE only.

7. "NFS Only" Alternative—Acquire, rerack, and use NFS only.

8. "No Action" Alternative—a. No near-term AFR storage capacity is provided. Program implementation is delayed until a new AFR is available.

b. No near-term or long-term AFR storage capacity.

The EIS will analyze the impact of measures which could reduce AFR storage demand, such as transshipping of fuel to another site where space is still available and more closely packing fuel assemblies in the reactor basins.

Among alternatives not considered in detail are reprocessing (as a matter of national policy), permanent disposal rather than interim storage (waste repository not available in near-term), interim storage in a new AFR storage facility (not available in near-term), reactor shutdown (as a matter of national policy), Government storage facilities (not licensed), no reracking at existing AFR facilities (inadequate capacity to meet demand).

Comments and Scoping

Public input concerning issues of U.S. spent fuel storage policy and programs has been received through review and comments on the "Final Generic Environmental Impact Statement on Handling and Storage of Spent Light Water Power Reactor Fuel" (NUREG-0575), August 1979, and on the "Final Environmental Impact Statement U.S. Spent Fuel Policy" (DOE/EIS-0015), May 1980. Because of this previous public involvement, no public scoping meeting for the subject EIS has been scheduled. All interested parties are invited to submit written comments or suggestions to be considered by DOE in preparation of this EIS. Attached is a preliminary draft outline for the proposed EIS which can serve as the basis for comments. DOE will consider the need for a scoping meeting after consideration of written comments on this Notice of Intent.

Upon completion of the Draft EIS, its availability will be announced in the Federal Register, public comments will again be solicited, and hearings will be held in the appropriate locations. Those persons not desiring to submit comments or suggestions now, but who would like to receive a copy of the draft EIS for review and comment when it is issued should notify Mr. Lawrence at the above address.

Copies of the documents currently planned to be used in the preparation of the EIS are available for inspection at:

Public Reading Room, FO1, room 6A-152, Forrestal Building, 1000 Independence Avenue, SW, Washington, DC
Albuquerque Operations Office, National Atomic Museum, Kirkland Air Force Base East, Albuquerque, New Mexico
Chicago Operations Office, 175 West Jackson Boulevard, Chicago, Illinois
Chicago Operations Office, 9800 South Cass Avenue, Argonne, Illinois
Idaho Operations Office, 550 Second Street, Idaho Falls, Idaho
Nevada Operations Office, 2753 South Highland Drive, Las Vegas, Nevada
Oak Ridge Operations Office, Federal Building, Oak Ridge, Tennessee
Richland Operations Office, Federal Building, Richland, Washington
Energy Information Center, 111 Pine Street, San Francisco, California
Savannah River Operations Office, Savannah River Plant, Aiken, South Carolina

All comments to M. J. Lawrence postmarked on or before September 15, 1980, will be carefully considered in the preparation of the EIS. Comments postmarked after that date will also be incorporated to the extent practical.

Dated at Washington, D.C., this 6th day of August 1980.

For the United States Department of Energy.

Ruth Clusen,

Assistant Secretary for Environment.

Near-Term Away-From-Reactor (AFR) Spent Fuel Storage Facilities Acquisition EIS (NT/AFR EIS)—Draft Annotated Outline

Foreword

Why this environmental impact statement (EIS) has been prepared and how it relates to other recent reports including the following:

1. DOE/EIS-0015, Final Environmental Impact Statement, U.S. Spent Fuel Policy, May 1980.
2. NUREG-0575, Final Generic Environmental Impact Statement on Handling and Storage of Spent Light Water Power Reactor Fuel, August 1979.
3. DOE/SR-0004, Department of Energy Study on Spent Nuclear Fuel Storage, March 1980.
4. DOE/NE-0007, Proposed Rulemaking on the Storage and Disposal of Nuclear Waste, April 1980.
5. DOE/EIS-0046-D, Draft Environmental Impact Statement, Management of Commercially Generated Radioactive Waste, April 1979.

I. Summary

II. Need for Action

A. Background:

1. Policy
2. Previous Action
3. Purpose of NT/AFR EIS

B. Need for Spent Fuel Storage Capacity:

1. Domestic Spent Fuel—The salient points are discussed briefly in this section and in more detail in Appendix A. The basis for the capacity projections will be identified.

1.1 Planning base case (assumptions are maximum pool expansion at reactors, no transshipment between reactor sites, and maintenance of full core reserve [FCR] in reactor storage basins).

1.2 Low case (same as base case except that transshipment is assumed).

1.3 High case (same as base case except that pool expansion at reactors is assumed to occur only to the extent that is currently planned).

2. Foreign Spent Fuel: The three fuel delivery schedules identified in the Foreign EIS (DOE/EIS-0015, Vol. 3) will be discussed, including the amount of fuel involved and the implications regarding nonproliferation issues.

C. AFR Capacity Required (Domestic and Foreign): The range of required AFR capacity as a function of time for domestic and foreign spent fuel will be presented and a base case will be established.

III. Proposed Action and Alternatives

A. Potential Storage Options and Availability of AFR Storage Facilities:

1. Existing Commercial Facilities: Existing commercial facilities will be discussed briefly in this section and in greater detail in Appendix B. A brief description of each facility and capacity option, schedule of availability of each option, and estimated cost of reracking will be given. Other nuclear fuel cycle facilities in each region also will be discussed.

1.1 Allied General Nuclear Services—Barnwell Nuclear Fuel Plant (AGNS-BNFP),

1.2 General Electric—Morris Facility (GE-Morris),

1.3 Western New York Nuclear Services Center—Nuclear Fuel Services (NFS).

2. New AFR Spent Fuel Storage Facilities: Only water basin storage will be considered in this section and will be discussed briefly. Water basin storage will be discussed in greater detail in Appendix E.

3. Other Means to Provide AFR Storage Capacity Not Considered as Near-Term Alternatives: This section will briefly discuss other ways of providing AFR capacity which are not appropriate as near-term alternatives. More detailed discussion of this subject is included in Appendix F.

B. Alternatives: Of the eight alternatives to be considered in this EIS, the first seven involve the acquisition and use of one of more existing private facilities after reracking to the following capacities: AGNS-Barnwell—Reracked capacity, 2250 MTU; GE-Morris—Available capacity after rerack, 750 MTU; NFS-West Valley—Available capacity after rerack, 1500 MTU.

The program preferred by the DOE is to acquire two or more of these facilities. Alternatives 1 through 4 would satisfy this preference: 1. AGNS-Barnwell, GE-Morris, and NFS-West Valley, 4500 MTU; 2. AGNS-Barnwell and GE-Morris, 3000 MTU; 3. AGNS-Barnwell and NFS-West Valley, 3750 MTU; 4. GE-Morris and NFS-West Valley, 2250 MTU; 5. AGNS-Barnwell, 2250 MTU; 6. GE-Morris, 750 MTU; 7. NFS-West Valley, 1500 MTU.

For all alternatives listed above, the following will be determined for the high-, low-, and base-case capacity demands:

a. Date of available near-term capacity.

b. Shortfall of available capacity.

c. Shortfall of available capacity minimized by actions in the following order:

- Transshipment (intra- and/or inter-utility).
- Reduced acceptance of foreign fuel.
- Utilities' loss of reserve storage capacity.

—Reactor years without full core reserve capacity.

—Reactor years without discharge capability.

- Acceptance of no foreign fuel (except in case of national emergency) and reactor shutdown.

8. "No Action" Alternative: a. No near-term AFR storage capacity provided and program implementation delayed until a new AFR facility becomes available. b. Spent fuel storage program never implemented and no AFR capacity provided by U.S. Government. This alternative will be discussed briefly here and reference will be made to the detailed analysis in the Generic Spent Fuel Storage EIS (DOE/EIS-0015).

IV. Affected Environment and Environmental Consequences

The environmental impacts of the alternatives will be discussed briefly in this section and in greater detail in Appendix C.

A. Affected Environment: The affected environment will be summarized here for each alternative.

B. Environmental Consequences of Alternatives: The environmental consequences of each of the alternatives in Section III will be identified for each of the following categories:

1. Rerack Modification.
2. Operation: (Composite facilities and transportation effects for both normal and accident situations.)
3. Decontamination and Decommissioning (D&D): (Composite facilities and transportation effects.)
4. Capacity Shortfalls (Consequences of high and low cases).
5. Resource Commitment: (Composite facilities and transportation impacts.)
6. Safeguards and Sabotage.
7. Cumulative Impacts.

C. Mitigating Measures.

V. List of Preparers

VI. List of Agencies, Organizations, and Persons To Whom Copies of the Statement are Sent

Index

Glossary

APPENDICES

Appendix A: Demand for Domestic Spent Fuel Storage Capacity

The demand projections will be based primarily on DOE/NE-0002, Spent Fuel Storage Requirements—The Need for Away-From-Reactor Storage, January 1980.

1. At-Reactor (AR) Storage Basin:

1.1 Current Capacity

1.2 Expansion Options:

- Utility planned expansion
- DOE estimated maximum fuel pool expansion
- Regulatory and institutional considerations

1.3 Reserve Capacity:

- Full Core Reserve (FCR)
- Discharge Capacity (DC)

2. AFR Capacity Needed:

2.1 AFR capacity needed to maintain FCR

2.2 AFR capacity needed to maintain DC

A discussion of the economics of replacement power will be included for both cases.

3. Methods for Reducing the Required Storage Capacity:

3.1 Transshipment (intra- and/or inter-utility):

- Current status
- Cask availability
- Regulatory and institutional considerations
- Current plans
- Maximum possible

3.2 Extended Fuel Cycles

Appendix B: Facility Description and Expected Availability

This appendix will provide a description of each facility and capacity option considered in this EIS. The discussion will include the information needed to analyze adequately the environmental effects resulting from the use of each facility at the different capacity options. Other nuclear fuel cycle facilities in the region will be described briefly.

1. Allied General Nuclear Services—Barnwell Nuclear Fuel Plant (AGNS-BNFP)

2. General Electric—Morris Storage Facility (GE-Morris)

3. Western New York Nuclear Services Center—Nuclear Fuel Services (NFS)

The following section identifies the outline that will be followed for each facility described above.

X Introduction

X.1 Site Description:

X.1.1 Facility Location

X.1.2 Local Demography

X.1.3 Land use

X.1.4 Water Use (optional)

X.1.5 Geology and Seismicity

X.1.6 Hydrology

X.1.7 Meteorology

X.1.8 Ecology

X.2 Transportation Network

X.3 History

X.4 Current Status and Availability

X.5 Facility Description:

X.5.1 Facility Design

X.5.2 Pool Cooling and Cleanup

X.5.3 Radwaste Treatment

X.5.4 Ventilation and Off-Gas Systems

X.5.5 Auxiliary Systems

X.6 Facility Operation:

X.6.1 Spent Fuel Receiving

X.6.2 Spent Fuel Handling (emplacement in storage racks)

X.6.3 Cask Cleanup and Shipment Offsite

X.6.4 Handling Rates

X.6.5 Employment Requirements

X.6.6 Resource Commitments

X.6.7 Facility Effluents

X.6.8 Facility Decontamination and Decommissioning

X.7 Storage Capacity Options:

X.7.1 Near-term

X.7.2 Mid-term (to include new pools and dry storage where applicable—refer to Appendix G)

X.8 Scheduling and Licensing Considerations (to include the influence of possible future activities)

X.9 Other Nuclear Fuel Cycle Facilities in Region

Appendix C: Environmental Effects of Each Facility

In this appendix, the environmental effects of each capacity option listed in Appendix B will be described. This appendix and Appendix D (Environmental Effects of Transporting Spent Fuel) will form the building blocks for assessing environmental impacts. These two appendices will be comprehensive enough to support the needed site-specific action.

1. Effects of Rerack Modifications (where applicable)

2. Operations:

2.1 Radiological Effects:

2.1.1 Normal Operation:

2.1.1.1 Summary of Assumptions, Siting, Meteorology, and Population Distribution

2.1.1.2 Release of Radioactive Material

2.1.1.3 Dose Commitment

2.1.1.4 Health Effects

2.1.1.5 Effects on Biota Other Than Man
2.1.2 Accidents
2.1.3 Safeguards—Discussion of facility safeguards and sabotage will be tiered to the generic EISs.
2.2 Other Effects:
2.2.1 Socioeconomic Impacts—The following effects will be identified for the maximum year:
2.2.2 Non-radiological Effluents
2.2.3 Accidental Deaths
2.2.4 Occupational Injury
2.3 Decontamination and Decommissioning:
2.3.1 Decontamination and Decommissioning Scenario
2.3.2 Radiological Effects

Appendix D: Environmental Effects of Transporting Spent Fuel

1. Transporting Radioactive Material in the United States

The logistics of transporting radioactive material will be discussed in general for the reader who is not familiar with how radioactive material is shipped. The role of shippers and carriers will be emphasized, along with their responsibilities. Transportation effects will be referenced to other environmental documentation to the extent possible.

1.1 Applicable Regulations:
1.1.1 Organizations and their Responsibilities
1.1.2 Packaging Requirements
1.1.3 Vehicle Safety
1.1.4 Routing
1.1.5 Handling
1.1.6 Safeguards
1.2 Packaging:
1.2.1 Type B (general description)
1.2.2 Cask Descriptions
1.2.3 Cask Inventories
1.2.4 Resource Commitments
1.3 Assessment Methodology:
1.3.1 Normal Impacts (radiological and other)
1.3.2 Accident impacts (radiological and other)
2. Scenario Descriptions and Impacts
2.1 Radiological Impacts During Normal Conditions
2.2 Radiological Impacts During Accident Conditions
2.3 Other Impacts of Transportation During Normal Conditions (pollutants, dust, heat generation)
2.4 Other impacts of Transportation during Accident Conditions (injuries and deaths)
3. Physical Protection (Safeguards)
4. Decontamination and Decommissioning of Transportation Equipment

Appendix E. New AFR Spent Fuel Storage Facility

Water basin storage will be considered in this appendix based upon a DOE conceptual design.

1. Facility Description
2. Licensing and Construction Considerations

Appendix F: Potential Spent Fuel Storage Options

1. Dry Storage:
1.1 Existing Commercial Facilities
1.2 Cask Storage
1.3 New Facilities

Dry well storage as identified in *Spent Unreprocessed Fuel (SURF) Facility Evaluation Plan for the Alternative Storage Concepts* (RHO-DC-501) will be considered as well as other dry storage methods.

2. Government Facilities: Government Facilities which might possibly be adapted for storage of commercial spent fuel will be discussed.
3. Double Tier Racking
4. Pin Consolidation and Storage
5. Scheduling and Licensing

Considerations: The availability of the facilities and techniques listed above will be related to near-term AFR storage requirements.

[FR Doc. 80-24600 Filed 8-14-80; 8:45 am]
BILLING CODE 6450-01-M

Economic Regulatory Administration

Requirement of Development and Submission of Annual Fuel Substitution Plans by Federal Agencies

AGENCY: Economic Regulatory Administration, Department of Energy, and Office of Management and Budget.

ACTION: Federal agencies annual fuel substitution plan.

Notice: Pursuant to the provisions of Section 1-302(a) of Executive Order 12217, dated June 18, 1980, all affected Executive Agencies are required to present annually to the Director of the Office of Management and Budget (OMB), through the Secretary of Energy (DOE), plans and cost estimates for the conversion from oil or gas use to alternate fuel use by electric powerplants (powerplants) and major fuel-burning installations (MFBIs) under their jurisdiction.

DOE is required to provide Federal agencies guidance and a schedule for completion of Annual Fuel Substitution Plans. In recognition of the brief period of time available to the agencies before they must complete their fiscal year 1982 budget requests, the following guidance will apply to the initial annual plan.

Initial Annual Plan (Fiscal Year 1982)

Each agency owning or operating powerplants or MFBIs as defined in 10 CFR 500.4 and 500.5 of the DOE regulations implementing the Powerplant and Industrial Fuel Use Act of 1978 (42 U.S.C.A. § 8301 *et seq.*) (FUA) will complete and submit by September 1, 1980, an initial fuel substitution plan as a basis for its fiscal year 1982 budget request. The plan will be submitted to DOE. After review, DOE will transmit each plan to OMB. Each such plan will identify and describe fuel use conversions and replacements incorporated within the agency's fiscal year 1982 budget requests, including project descriptions and justifications.

Specifically this initial plan, shall, at a minimum, include (1) identification of powerplants and MFBIs, by location, fuel type and size, owned or operated by the affected agency if such information has not already been provided to DOE in the "Federal Facilities Powerplant and MFBI Survey, DOE Form 5020.1"; (2) identification, by unit, of fuel substitution projects planned for inclusion in the agency's fiscal year 1982 budget; and (3) justification for each project, including timing and funding details.

Subsequent Annual Plans (after fiscal year 1982)

Proposed guidelines describing the requirements for preparation and submission of Phase Two Annual Fuel Substitution Plans after the initial (fiscal year 1982) plan will be published in the near future. After consideration of comments received, final guidelines will be published in the Federal Register.

OMB and DOE will review the plans and the specific projects noted therein, and will respond to the agencies concerning any recommended changes to the plans. Each agency is required to include in its budget requests the funds needed to carry out the requirements of the Executive Order so that OMB may give special consideration to funding proposed conversions within overall fiscal constraints. The Department of Energy will perform general oversight, and is responsible for obtaining compliance in the development and implementation of the plans.

Where to Submit: Each agency is required to submit three copies of its initial Annual Fuel Substitution Plan by September 1, 1980, to Mr. Walter A. Romanek, Chief, Federal Facilities Branch, Office of Fuels Conversion, ERA, DOE, 2000 M Street NW., Room 3214, Washington, D.C. 20461, phone (202) 653-4262.

FOR FURTHER INFORMATION CONTACT:

Walter A. Romanek (Office of Fuels Conversion), Economic Regulatory Administration, Department of Energy, Room 3214, 2000 M Street, NW., Washington, D.C. 20461, (202) 653-4262.

Mark Arnold (Energy Conservation & Regulation Branch), Office of Management and Budget, New Executive Office Building, Room 8013, Washington, D.C. 20503, (202) 395-4525.

G. Randolph Comstock (Office of General Counsel), Department of Energy, Room 6G-087, 1000 Independence Avenue, SW.,

Washington, D.C. 20585, (202) 252-2967.

Issued in Washington, D.C., August 7, 1980.

Robert L. Davies,

Assistant Administrator, Office of Fuels Conservation, Economic Regulatory Administration.

[FR Doc. 80-24688 Filed 8-14-80; 8:45 am]

BILLING CODE 6450-01-M

Proposed Contract Award

AGENCY: Department of Energy.

ACTION: Notice of proposed contract award.

SUMMARY: In accordance with Department of Energy (DOE) Procurement Regulations, Title 41, Subpart 9-1.5409, published in the Federal Register on January 11, 1979 (44 FR 2556), DOE gives public notice that a contract award, recognizing the existence of potential organizational conflicts of interest, is in the best interests of the United States.

FOR FURTHER INFORMATION CONTACT:

Priscella Thomas, Office of Procurement Operations, Room 209, 400 First Street, NW., Washington, D.C. 20585, (202) 376-4691.

Enver Masud, Office of Utility Systems, 2000 M Street NW., Washington, D.C. 20461, (202) 653-3886.

Notice: U.S. Department of Energy.

Findings, Mitigation, and Determination

Upon the basis of the following findings and determination, the proposed contract described below is being awarded recognizing the existence of potential organizational conflicts of interest pursuant to the authority of 41 CFR 9-1.5409(a)(3).

Findings

1. The Department of Energy (DOE), Office of Utility Systems in the Economic Regulatory Administration is currently conducting a study of electric power system reliability. The completed study will be presented to the Congress in response to Section 209 of the Public Utility Regulatory Policies Act of 1978 (PURPA).

2. Because of the time constraints imposed by PURPA, it is necessary to utilize experience gained by Systems Control, Inc. (SCI) under seperate contracts with DOE to perform certain additional studies and analyses.

3. In accordance with 41 CFR 9-1.5405, SCI provided a statement disclosing relevant information concerning its interests related to the work performed for the agency and bearing on whether it has possible organizational conflicts of interest (1) with respect to being able to render impartial, technically sound and objective assistance or advice, or (2) which may give it an unfair competitive advantage.

4. Based on an evaluation of the facts contained in the disclosure statement, that is, the clientele of SCI includes energy concerns as defined by Section 601(b) of PL 95-91, it has been determined that SCI may have potential organizational conflicts of interest with regard to the work required by the Office of Utility Systems, in accordance with 41 CFR 9-1.5409(a).

5. Because SCI has the exclusive capability to perform the work for the Office of Utility Systems within the time constraints, it is neither feasible nor desirable to disqualify SCI from award pursuant to 41 CFR 9-1.5409(a)(1). Furthermore, it is not possible to avoid the potential organizational conflicts of interest by the inclusion of appropriate conditions in the resulting contract, pursuant to 41 CFR 9-1.5409(a)(2).

Mitigation

Critiques of the work will be obtained from independent sources from within DOE and from outside sources. The SCI report together with the reports of several other contractors will be evaluated and utilized by DOE to prepare a Final Report for delivery to the Congress. The final conclusions and recommendations will be solely those of DOE.

Determination

In light of the above Findings and Mitigation, and in accordance with 41 CFR 9-1.5409(a)(3), the proposed contract award is in the best interests of the United States.

Dated: August 8, 1980.

Hazel R. Rollins,

Administrator, Economic Regulatory Administration.

[FR Doc. 80-24684 Filed 8-14-80; 8:45 am]

BILLING CODE 6450-01-M

Resource Applications National Petroleum Council Subcommittee on Emergency Preparedness; Open Meeting

Pursuant to the provisions of the Federal Advisory Committee Act (Pub. L. 92-463, 86 Stat. 770), notice is hereby given of the following advisory committee meeting:

NAME: Subcommittee on Emergency Preparedness of the National Petroleum Council.

DATE AND TIME: Monday, September 8, 1980, 9:30 a.m.

PLACE: Madison Hotel, Mount Vernon Room, 15th and M Streets, N.W., Washington, D.C.

CONTACT: Georgia Hildreth, Director, Advisory Committee Management, Department of Energy, 1000 Independence Avenue, S.W., Forrestal Building, Room 8G087, Washington, D.C. 20585, Telephone: 202-252-5187.

PURPOSE OF PARENT COMMITTEE: To provide advice, information, and recommendations to the Secretary of Energy on matters relating to oil and gas or the oil and gas industries.

TENTATIVE AGENDA: Discuss the scope of the study to be conducted in response to the Secretary of Energy's request for an analysis of issues bearing on emergency preparedness planning.

Discuss an organizational structure for the study.

Discuss a timetable for completion of the study.

Discuss any other matters pertinent to the overall assignment from the Secretary.

Public Comment (10 minute rule).

PUBLIC PARTICIPATION: The meeting is open to the public. The Chairperson of the Subcommittee is empowered to conduct the meeting in a fashion that will, in his judgment, facilitate the orderly conduct of business. Any member of the public who wishes to file a written statement with the Subcommittee will be permitted to do so, either before or after the meeting. Members of the public who wish to make oral statements pertaining to the agenda items should contact the Advisory Committee Management Office at the address or telephone number listed above. Requests must be received at least 5 days prior to the meeting and reasonable provision will be made to include the presentation on the agenda.

TRANSCRIPTS: Available for public review and copying at the Public Reading Room, Room 5B180, Forrestal Building, 1000 Independence Avenue, S.W., Washington, D.C., between 8:00 a.m. and 4:30 p.m., Monday through Friday, except Federal holidays.

Issued at Washington, D.C. on August 8, 1980.

Georgia Hildreth,

Director, Advisory Committee Management.

[FR Doc. 80-24767 Filed 8-14-80; 8:45 am]

BILLING CODE 6450-01-M

Proposed Subsequent Arrangement

Pursuant to Section 131 of the Atomic Energy Act of 1954, as amended (42 U.S.C. 2160), notice is hereby given of a proposed "subsequent arrangement"

under the Agreement for Cooperation Between the Government of the United States of America and the Government of the Republic of Korea Concerning Civil Uses of Atomic Energy.

The subsequent arrangement to be carried out under the U.S.-Korean Agreement for Cooperation involves approval of contractual arrangements for the assignment of uranium enrichment services held by U.S. utilities necessary to support services 1,900 Megawatts electrical. The power reactors involved are Korean Electric Power Company Nuclear Units 11 and 12, and the utilization of uranium enrichment services will commence in fiscal years 1987 and 1988 respectively.

In accordance with Section 131 of the Atomic Energy Act of 1954, as amended, it has been determined that entering into this subsequent arrangement will not be inimical to the common defense and security. It has furthermore been determined that the assignment of these enrichment services complies with the provisons of Pub. L. 96-280 permitting the supply of additional low enriched uranium under international agreements for cooperation in the civil uses of nuclear energy.

This subsequent arrangement will take effect no sooner than September 2, 1980.

For the Department of Energy.

Dated: August 11, 1980.

Harold D. Bengelsdorf,

Director for Nuclear Affairs, International Nuclear and Technical Programs.

[FR Doc. 80-24768 Filed 8-14-80; 8:45 am]

BILLING CODE 6450-01-M

Proposed Subsequent Arrangement

Pursuant to section 131 of the Atomic Energy Act of 1954, as amended (42 U.S.C. 2160) notice is hereby given of a proposed "subsequent arrangement" under the Agreement for Cooperation Between the Government of the United States of America and the Government of Japan Concerning Civil Uses of Atomic Energy, as amended.

The subsequent arrangement to be carried out under the above mentioned agreement involves approval of the following sale: Contract Number S-JA-274, to Japan, 60 grams of Uranium enriched to 0.38 percent in U-235, 60 grams of Uranium enriched to 0.81 percent in U-235, and 60 grams of Uranium enriched to 1.12 percent in U-235. These materials are to be used for ultra-centrifuge development for uranimum enrichment.

In accordance with section 131 of the Atomic Energy Act of 1954, as amended, it has been determined that the furnishing of these nuclear materials will not be inimical to the common defense and security.

This subsequent arrangement will take effect no sooner than September 2, 1980.

For the Department of Energy.

Dated: August 11, 1980.

Harold D. Bengelsdorf,

Director for Nuclear Affairs International Nuclear and Technical Programs.

[FR Doc. 80-24769 Filed 8-14-80; 8:45 am]

BILLING CODE 6450-01-M

Proposed Subsequent Arrangement

Pursuant to section 131 of the Atomic Energy Act of 1954, as amended (42 U.S.C. 2160) notice is hereby given of a proposed "subsequent arrangement" under the Agreement for Cooperation Between the Government of the United States of America and the Government of Canada Concerning Civil Uses of Atomic Energy, as amended.

The subsequent arrangement to be carried out under the above mentioned agreement involves approval of the sale of 9.555 grams of normal uranium to the University of Saskatchewan for use as standards for calibration of equipment. This contract is designated as S-CA-297.

In accordance with section 131 of the Atomic Energy Act of 1954, as amended, it has been determined that the furnishing of this nuclear material will not be inimical to the common defense and security.

This subsequent arrangement will take effect no sooner than September 2, 1980.

For the Department of Energy.

Dated: August 11, 1980.

Harold D. Bengelsdorf,

Director for Nuclear Affairs International Nuclear and Technical Programs.

[FR Doc. 80-24770 Filed 8-14-80; 8:45 am]

BILLING CODE 6450-01-M

Economic Regulatory Administration

[Docket No. ERA-FC-80-005; OFC Case Nos. 56400-9073-01-12; 56400-9073-02-12; 56400-9073-03-12]

Availability of Tenative Staff Determination; Shell Oil Co.

AGENCY: Economic Regulatory Administration, Department of Energy.

ACTION: Notice of availability of tentative staff determination.

SUMMARY: On January 25, 1980, Shell Oil Company (Shell or the Company) filed a petition with the Economic Regulatory Administration (ERA) of the Department of Energy (DOE) for an order granting a permanent fuels mixture exemption for each of three new major fuel burning installations (MFBIs) from certain provisions of the Powerplant and Industrial Fuel use Act of 1978 (FUA or the Act) (42 U.S.C. 8301 *et seq.*), which prohibit the use of petroleum or natural gas as a primary energy source in new MFBIs. The petition was filed in accordance with 10 CFR Part 500, *et seq.*, implementing the provisions of FUA (Interim Rule). ERA published Final Rules relating to new facilities on June 6, 1980, (45 FR 38276 and 38302) which became effective August 5, 1980.

The MFBIs for which the petition is filed are three identical field erected boilers identified as Boilers EPP-NCR-BLR-1, -2, and -3 (Boilers No. 1, No. 2, and No. 3) to be installed at Shell's new olefins plant located in its manufacturing complex at Norco, Louisiana. Each boiler has a design heat imput rate of 820 million Btu's per hour and is rated at 600,000 pounds of steam per hour. Each boiler has a design capability of burning coal, petroleum, and a mixture of pyrolysis pitch and pyrolysis gas-oil.

In its petition, Shell proposed to burn a mixutre of pyrolysis pitch (a liquid residue by-product of its naphtha and gas-oil catalytic cracking units) and pyrolysis gas-oil in each of the three boilers. Shell contended that the pyrolysis pitch is an "alternate fuel" because it is an unavoidable waste by-product of refinery operations that is commercially unmarketable by reason of its quality. The pyrolysis gas-oil Shell proposes to use is a distillate fuel oil (gas-oil) from its catalytic cracking unit. It is a blend stock that has a lower Btu heat content and heavier gravity rating than commercial grade No. 2 fuel oil.

Shell stated that when its new olefins plant is operating at its normal design specification rate, producing products and the byproduct, pyrolysis pitch, at anticipated volumes, the amount of petroleum (gas-oil) used in the proposed fuels mixture will not exceed 25 percent of the total annual Btu heat input of the primary energy sources of each boiler. The Company submitted a duly authorized certification to that effect for each unit.

ERA accepted Shell's petition for a permanent fuel mixture exemption for each boiler on February 26, 1980. Notice of that acceptance and a statement of the reasons contained in the petition for requesting the exemptions were published in the Federal Register on March 3, 1980, (45 FR 13803), commencing a 45-day public comment period pursuant to Section 701 of FUA.

During this period, interested persons were also afforded an opportunity to request a public hearing. The period for submitting written comments and for requesting a public hearing closed on April 17, 1980. A public hearing was not requested. One letter in support of Shell's petition for the fuels mixture exemptions was received from the Manager, Government Contols Coordination, Atlantic Richfield Company.

ERA staff has reviewed the information contained in the record of this proceeding to date. A Tentative Staff Determination has been made recommending that ERA issue an order that would grant the requested permanent exemptions to use a fuel mixture of pyrolysis pitch and pyrolysis gas-oil in each of the three boilers.

A public file containing a copy of the Tentative Staff Determination and other documents and supporting material on this proceeding is available for inspection upon request at: ERA Room B-110, 2000 M Street, NW., Washington, D.C., Monday-Friday, 8 am.-4:30 pm.

ERA will issue a final order, in accordance with Sections 501.68 and 503.38 of the final rules, granting or denying the petition for a permanent fuels mixture exemption for each boiler within six months after the public comment period provided for in this notice has closed, unless ERA extends the period. Notice of any extension, together with a statement of the reasons therefore, will published in the Federal Register.

DATES: Written comments on the Tentative Staff Determination and requests for a hearing are due on or before August 29, 1980.

ADDRESSES: Fifteen copies of written comments, and any requests for a public hearing, shall be submitted to: Economic Regulatory Administration, Case Control Unit, Box 4629, Room 2313, 2000 M Street, NW., Washington, D.C. 20461. Docket Number ERA-FC-80-005 should be printed clearly on the outside of the envelope and the document contained therein.

FOR FURTHER INFORMATION CONTACT:

Constance L. Buckley, Chief, New MFBI Branch, Office of Fuels Conversion, Economic Regulatory Administration, 2000 M Street, NW., Room 3128, Washington, D.C. 20461, Phone (202) 653-4226.

Edward J. Peters, Jr., Case Manager, New MFBI Branch, Office of Fuels Conversion, Economic Regulatory Administration, 2000 M Street, NW., Room 3126-A, Washington, D.C. 20461, Phone (202) 653-3645.

James Renjilian, Office of the General Counsel, Department of Energy, 1000 Independence Avenue, SW., Room 6G-087, Washington, D.C. 20585, Phone (202) 252-2967.

SUPPLEMENTARY INFORMATION: Concurrent with its petition for a permanent fuel mixture exemption for each boiler, Shell petitioned ERA for a temporary public interest exemption for each of three boilers to burn distillate fuel oil (gas-oil) in each boiler for 18 months during "initial start-up" of the new plant so that the "alternate fuel," pyrolysis pitch, an unavoidable, commercially unmarketable, waste by-product of the production process, could become fully available for use in a fuel mixture with gas-oil. ERA determined that this petition was incomplete and was not acceptable as filed. The Company was notified of this action by letter dated February 26, 1980.

Shell also requested ERA to classify the pyrolysis pitch to be produced by its olefins catalytic cracking unit at Norco, Louisiana, as an alternate fuel pursuant to § 507.4(e), which excludes from the definition of petroleum any liquid, solid, or gaseous waste by-product of refinery operations which is commercially unmarketable by reason of its quality or quantity.

For the purpose of the requested classification, the ERA staff assessed the commercial marketability of pyrolysis pitch under the criteria prescribed for both an industrial operation (Section 500.2 of the Interim Rule) and for a refinery operation (Section 507.4(e) of the Interim Rule), which more strictly requires additional evidence of unmarketability.

Shell described pyrolysis pitch as a black, dense, viscouse semi-liquid by-product which is the highest boiling fraction of the cracking operations from which olefins are produced. By weight, it is 93.3 percent carbon, 6.1 percent hydrogen and small amounts of oxygen and sulfur. It has a high heating value of 17,500 Btu's per pound, a viscosity, SSF/210F of 400—1,800 and a specific gravity of 1.1.

The Company presented evidence of its extensive efforts to market this by-product blended with several different blend stocks and provided a list of 69 potential customers that were contacted during its marketing efforts. Shell also furnished the results of tests made of different blends of the by-product in its search for new marketable applications of the waste by-product.

Upon review and analysis of the information furnished in connection with testing and marketing efforts and after verifying those efforts, with prospective customers selected on a random basis, it was concluded that, because of its poor quality, incompatibility with most other hydrocarbons, viscosity, and poor performance in handling and use, pyrolysis pitch was unmarketable by reason of its quality. Accordingly, ERA determined that the pyrolysis pitch to be produced at the Norco plant should be excluded from the definition of petroleum, under the provisions of Section 507.4(e) of the Interim Rule, thus permitting it to be classified an alternate fuel. On April 22, 1980, Shell was notified by letter of this classification.

In its petition for fuels mixture exemptions, Shell demonstrated to the satisfaction of ERA that:

(1) It proposes to use a mixture of petroleum and an alternate fuel as a primary energy source; and

(2) The amount of petroleum or natural gas proposed for use in the mixture will not exceed the minimum percentage of the total annual Btu heat input needed to maintain operational reliability of the installation consistent with maintaining a reasonable level of fuel efficiency.

If fuel mixture exemption is granted, ERA may not require that the percentage of petroleum or natural gas used in the mixture be less than 25 percent of the total annual Btu heat input of primary energy sources of the installation.

In addressing the eligibility and evidentiary requirements in § 505.28(a) and (c)(4) of the Interim Rule, Shell stated that it proposed to use a mixture of pyrolysis pitch and pyrolysis gas-oil as the primary source of energy in boilers No. 1, No. 2, and No. 3. Shell's petition did not propose the use of natural gas in any of the three boilers.

Shell stated that, when the olefins plant is operating at its normal design specification rate, the amount of gas-oil used in the proposed fuel mixture will not exceed 25 percent of the total annual Btu heat input of the primary energy source of each boiler. Shell submitted a duly authorized certification to that effect for each unit. Shell estimated that beginning in January 1982, when the plant is in normal operation, each boiler will annually use 219,000 barrels of net liquid fuel equivalent (NLFE) barrels of petroleum (gas-oil) in a fuel mixture with 694,000 NFFE barrels of alternate fuel (pyrolysis pitch). The percentages of the total annual Btu heat input of each unit attributable to gas-oil and pyrolysis pitch at these rates of use are 24 percent and 76 percent, respectively.

Prior to such time, to achieve this normal operating rate for each boiler with the proposed fuel mixture, some

additional gas-oil is needed for use in each boiler for boiler. ERA staff are persuaded that this additional gas-oil would not exceed the minimum percentage of the total Btu heat input of the primary energy sources of the unit needed to maintain reliability of operation of the units. Consistent with maintaining a reasonable level of fuel efficiency, the additional amounts of gas-oil required during this time for each boiler will be:

	Boiler -1	Boiler -2	Boiler -3
9/1/80 to 8/31/81			
Distillate fuel oil*	549	549	445
Pyrolysis pitch**	91	91	91
Percentage of total Btu heat input from pyrolysis pitch	14	14	17
9/1/81 to 12/31/81			
Distillate fuel oil	123	123	123
Pyrolysis pitch	92	92	92
Percentage of total Btu heat input from pyrolysis pitch	43	43	43

*Fuel volumes are shown in thousands of net liquid fuel equivalent (NLFE) barrels containing 5,960,000 Btu's per barrel.

**Volumes represents average volumes for the period which will increase to over 75 percent of the total fuels mixture for each boiler by January 1, 1982.

As the plant moves into the full operating mode, producing products and by-products, all available pyrolysis pitch residue will be utilized in a mixture with pyrolysis gas-oil for use as the primary energy source in boilers No. 1, No. 2, and No. 3 until in January 1982, when the olefins plant reaches normal operating mode and gas-oil in the fuels mixture will represent less than 25 percent of the total annual Btu heat input of each boiler.

Based on its review and analysis, the ERA staff has tentatively determined that Shell has demonstrated that, pursuant to section 212(d) of the Act and the applicable Interim Rule, it is eligible for the requested permanent fuel mixture exemption for each of these three new boilers and that, pursuant to 10 CFR 507.4(e), the pyrolysis pitch to be produced at this site is a commercially unmarketable by-product of its refining operations.

Therefore, ERA's staff recommends that ERA issue an order granting Shell the requested permanent exemptions from the prohibitions of Title II of the Act to enable it to burn a mixture of pyrolysis pitch and gas-oil in boilers No. 1, No. 2, and No. 3, provided that the amount of gas-oil in the fuels mixture with pyrolysis pitch to be used in each unit, after the first commencement of normal plant production in January 1982, does not exceed 25 percent of the total annual Btu heat input of each boiler.

This recommendation takes into account the purposes for which the minimum percentage of gas-oil provided by a fuels mixture exemption is to be used, i.e., to maintain reliability of operations consistent with maintaining a reasonable level of fuel efficiency. Therefore, should these exemptions be granted, ERA will not exclude from the definition of primary energy source any fuel that is used for such purposes, as ignition, start-up, testing, flame stabilization and control of each boiler.

The staff further recommends that under the terms and conditions of this order, the Company be permitted to use the amounts of gas-oil in a mixture with pyrolysis pitch necessary to start, test, and debug each installation and to produce the process steam needed to obtain and maintain a reliable stream of pyrolysis pitch from the catalytic cracking unit to be used in the fuels mixture for each of the three subject boilers.

On the basis of the environmental analysis provided by the Office of Fuels Conversion, and reviewed by the Office of Environment, in consultation with the Office of the General Counsel, DOE has concluded that the granting of these exemptions will not be a major Federal action significantly affecting the quality of the human environment, within the meaning of the National Environmental Policy Act of 1969. Accordingly, neither an environmental impact statement nor an environmental assessment is required.

Recommended Terms and Conditions: Section 214(a) of the Act gives ERA the authority to attach terms and conditions to any order granting an exemption. Based upon the information furnished by Shell, and upon the results of ERA staff analysis, the ERA staff has tentatively determined and recommends that any order granting the exemptions described above should, pursuant to Section 214 of the Act, be subject to the following terms and conditions:

(1) Shell will provide ERA with a compliance plan setting forth a complete schedule of milestones for the full completion and start-up of the plant within thirty (30) days of the date of this order. If, as the work on the plant progresses, a completion date is missed or it appears that such milestone will be delayed for more than thirty (30) days, Shell shall report such occurrence to ERA giving the reasons therefore and an appraisal of the effect, if any, the delay will have on the final completion of the plant and compliance with this order;

(2) Shell must make effective use of each of the fuel conservation measures identified in the Fuels Decision Report submitted as part of its petition for exemptions and shall operate each new installation with a maximum excess air of 10 percent and equip each boiler with the most effective control system available for controlling excess air;

(3) Shell shall evaluate the feasibility of installing an automatic system at the facility to control parameters such as excess air and boiler operation to insure maximum boiler efficiency. Shell shall indicate the results of such study in accordance with the requirements of item (10) below;

(4) Shell must notify Economic Regulatory Administration (ERA), Case Control Unit (Fuel Use Act) Box 4629, Room 3214, 2000 M Street NW., Washington, D.C. 20461, in writing of the commencement of the use of distillate fuel oil in each boiler subject to this order;

(5) Distillate fuel oil (gas-oil) may be used as a primary energy source in a fuel mixture in boiler EPP-NCR-BLR-1 in an amount not to exceed 549,000 net liquid fuel equivalent (NLFE) barrels containing 5,960,000 Btu's per barrel from September 1, 1980 to August 31, 1981, and in an amount not to exceed 123,000 NLFE barrels from September 1, 1981, for start-up and testing of the unit and providing process steam to establish the reliable production of the pyrolysis pitch (residue) in sufficient quantity to become the primary energy source of the proposed fuels mixture to be used during the normal operating mode;

(6) Distillate fuel oil (gas-oil) may be used as a primary energy source in a fuel mixture in boiler EPP-NCR-BLR-2 in an amount not to exceed 549,000 net liquid fuel equivalent barrels containing 5,960,000 Btu's per barrel from September 1, 1980 to August 31, 1981, and in an amount not to exceed 123,000 NLFE barrels from September 1, 1981 to December 31, 1981 for start-up and testing the unit and providing process steam to establish the reliable production of the pyrolysis pitch (residue) in sufficient quantity to become the primary energy source of the proposed fuel mixture to be used during the normal operating mode;

(7) Distillate fuel oil (gas-oil) may be used as a primary energy source in a fuel mixture in boiler EPP-NCR-BLR-3 in an amount not to exceed 445,000 net liquid fuel (NLFE) barrels containing 5,960,000 Btu's per barrel from September 1, 1980 to August 31, 1981, and in an amount not to exceed 123,000 NLFE barrels from September 1, 1981 to December 31, 1981, for start-up and testing the unit and to provide process steam to establish the reliable production of the pyrolysis pitch (residue) in sufficient quantity to become the primary energy source of the proposed fuel mixture to be used during the normal operating mode;

(8) No later than January 31, 1982, Shell will submit to ERA, at the address given in item (4) above, a duly executed certification that, from the commencement of the use of distillate fuel oil (gas-oil) through August 31, 1981, and that from September 1, 1981, to December 31, 1981, the amount of distillate fuel oil used in each boiler did not exceed the amounts stated in items (5)-(7) above;

(9) Pursuant to the reporting requirements of 10 CFR 503.3(g) of the Final Rules, Shell will submit an annual report to the ERA at the address given in item (4), not later than January 31, of each year, beginning in 1983, containing a duly executed certification that the amount of distillate fuel oil (gas-oil) used in each subject boiler did not exceed 25 percent of the total annual Btu heat input of the primary energy sources of each boiler; and

(10) In addition, Shell will include in the report required under item (8) above and in its subsequent annual reports:

(a) Identification of the actual quantities of pyrolysis pitch (residue) (in NLFE barrels) and distillate fuel oil (gas-oil) (in NLFE barrels) used during the year in each boiler as well as the heating value (in Btu's) of those fuels. The percentage will be calculated on a Btu basis. The following format for quantities will be used for each boiler:

Fuel Type	Amount Used Barrels	BTU Equivalent	Percentage of Annual Fuel Consumption

(b) Identification of any new fuel conservation measures, including the installation of an electrical turbogenerator, employed at the site during the year, estimate of fuels savings achieved, and assessment of the effectiveness of the conservation measures in energy savings.

The Tentative Staff Determination does not constitute a decision by ERA to grant the requested exemptions. Such a determination, in accordance with 10 CFR 501.66 shall be based on the entire record of this proceeding, including any comments received on the Tentative Staff Determination.

Issued in Washington, D.C., on August 8, 1980.

Robert L. Davies,

Assistant Administrator, Office of Fuels Conversion, Economic Regulatory Administration.

[FR Doc. 80-24689 Filed 8-14-80; 8:45 am]

BILLING CODE 6450-01-M

[OFC Case No. 63002-9102-01-12, 63002-9102-02-12; Docket No. ERA-FC-80-009]

Availability of Tentative Staff Determination; Hooker Chemicals & Plastics Corp.

AGENCY: Department of Energy, Economic Regulatory Administration.

ACTION: Notice of availability of tentative staff determination.

SUMMARY: February 8, 1980, Hooker Chemicals & Plastics Corp. (HCPC) filed a petition with the Economic Regulatory Administration (ERA) of the Department of Energy (DOE) for an order permanently exempting two major fuel burning installations (MFBIs) from the provisions of the Powerplant and Industrial Fuel Use Act of 1978 (FUA or the Act) (42 U.S.C. 8301 *et seq.*), which prohibit the use of petroleum and natural gas as a primary energy source in certain new MFBIs. Criteria for petitioning for exemptions from the prohibitions of FUA are published at 10 CFR Part 500, *et seq.* (Interim Rules). ERA published Final Rules relating to New Facilities on June 6, 1980 (45 FR 38276 and 38302) which became effective August 5, 1980.

The MFBIs for which the petition was filed are two identical field-erected boilers (identified as Boilers No. 1 and No. 2) installed at the Niagara Energy-From-Waste Plant in Niagara Falls, New York. Each boiler has a design heat input rate of 407 million Btu's per hour with a steam generating capacity of 300,000 pounds per hour and is capable of burning refuse derived fuel (RDF), coal and hydrogen in a mixture with No. 6 fuel oil and natural gas as its primary energy source.

HCPC requested a permanent fuel mixture exemption for each of the two MFBIs in order to use a mixture of coal, RDF and small amounts of hydrogen with not more than 25 percent petroleum and natural gas. RDF will be the primary alternate fuel and coal will be used as a backup alternate fuel.

ERA accepted the petition March 7, 1980, and published notice of its acceptance, together with a statement of the reasons set forth in the petition for requesting the exemptions, in the Federal Register on March 12, 1980 (45 FR 15975). Publication of the notice of acceptance commenced a 45 day public comment period pursuant to Section 701 of FUA. During this period, interested persons were also afforded an opportunity to request a public hearing. The period expired April 28, 1980. Four comments were received by ERA, all endorsing HCPC's petition for permanent fuel mixture exemptions. No hearing was requested.

Based upon ERA's review and analysis of the information presently contained in the record of this proceeding, a Tentative Staff Determination has been made recommending that ERA issue an order which would grant the requested permanent exemptions to use a mixture of RDF, coal, small amounts of hydrogen, No. 6 fuel oil and natural gas in which the amount of No. 6 fuel oil and natural gas would not exceed 25 percent of the total annual Btu heat input of the primary energy source of each of the two MFBIs.

ERA will issue a final order, in accordance with Sections 501.68 and 503.38 of the Final Rules, granting or denying the petition for permanent exemptions from the prohibitions of the Act within six months after the public comment period provided for in this notice has expired, unless ERA extends such period. Notice of any extension, together with a statement of reasons for such extension, will be published in the Federal Register.

DATES: Written comments on the Tentative Staff Determination and requests for a hearing are due on or before August 29, 1980.

ADDRESSES: Fifteen copies of written comments, and any requests for a public hearing, shall be submitted to the Economic Regulatory Administration, Case Control Unit (Fuel Use Act), Box 4629, Room 3214, 2000 M Street, NW, Washington, DC 20461. Docket Number ERA-FC-80-009 should be printed clearly on the outside of the envelope and the document contained therein.

FOR FURTHER INFORMATION CONTACT:

William L. Webb, (Office of Public Information), Economic Regulatory Administration, Department of Energy, 2000 M Street, NW, Room B-110, Washington, D.C. 20461, Phone (202) 653-4055.

Constance L. Buckley, Chief, New MFBI Branch, Office Fuels Conversion, Economic Regulatory Administration, Department of Energy, 2000 M Street, NW, Room 3128, Washington, D.C. 20461, Phone (202) 653-3679.

Douglas F. Mitchell, Office of the General Counsel, Department of Energy, 1000 Independence Avenue, SW, Room 6G-087, Washington, D.C. 20585, Phone: (202) 252-2967.

Terri L. Hamrick, Case Manager, Office of Fuels Conversion, Economic Regulatory Administration, Department of Energy, 2000 M Street, NW, Room 3207, Washington, D.C. 20461, Phone (202) 653-3675.

The public file containing a copy of the Tentative Staff Determination and other documents and supporting

materials on this proceeding is available for inspection upon request at: ERA, Room B-110, 2000 M Street, NW, Washington, DC, Monday through Friday, 8:00 am–4:30 pm.

SUPPLEMENTARY INFORMATION: ERA published Interim Rules on May 15 and 17, 1979 (10 CFR, Parts 500 *et seq.*) (44 FR 28530 and 44 FR 28950) to implement provisions of Title II of FUA. ERA published Final Rules relating to new facilities on June 6, 1980 (45 FR 38276 and 45 FR 38302) which became effective August 5, 1980. Title II of FUA prohibits the use of natural gas or petroleum in certain new MFBIs unless an exemption for such use has been granted.

Hooker Chemicals and Plastics Corp. (HCPC) installed at its Niagara Energy-From-Waste Facility in Niagara Falls, New York, two new identical field-erected boilers. Each unit has the design heat input rate of 407 million Btu's per hour with a steam generating capacity of 300,000 pounds per hour and is capable of burning refuse derived fuel (RDF), coal, small amounts of hydrogen, No. 6 fuel oil, and natural gas.

On February 8, 1980, in accordance with Section 505.28 of the Interim Rules, HCPC filed a petition with ERA requesting permanent fuels mixture exemptions for the two subject units in order to burn a mixture of coal, RDF and small amounts of hydrogen, with not more than 25 percent petroleum (No. 6 fuel oil) and natural gas. HCPC has certified that the total amount of No. 6 fuel oil and natural gas proposed to be used in each of the two units will not exceed 25 percent of the total annual Btu heat input of the primary energy source of each of the two units.

HCPC states that RDF will be the primary fuel consumed at the facility. Coal is intended to be used as a back-up fuel when RDF is unavailable or cannot be fired in the units, and oil is intended as a secondary back-up fuel. A small amount of natural gas will be used to ignite the oil, when the use of oil is necessary. Finally, the boilers will consume a small amount of waste hydrogen gas from chemical operations at the HCPC complex. The use of hydrogen gas and natural gas at the facility will be negligible. In order to maintain continuous, reliable operation of the facility, and to satisfy the energy needs of its chemical production complex, HCPC proposes to use a mixture of the foregoing fuels as the primary energy source at the facility.

ERA's staff has reviewed the information contained in the record of this proceeding to date. Based upon that review, a Tentative Staff Determination has been made which recommends that an order be issued which would grant permanent fuel mixture exemptions for Boilers No. 1 and No. 2 to use an RDF/coal/hydrogen/No. 6 fuel oil/natural gas fuels mixture in each unit, provided that the amount of petroleum and natural gas used in each unit does not exceed 25 percent of the total annual Btu heat input of the primary energy source of each unit.

This tentative determination also takes into account the purposes for which the minimum percentage of petroleum and natural gas provided by a fuels mixtures exemption is to be used, i.e., to maintain reliability of operation, consistent with maintaining a reasonable level of fuel efficiency. Therefore, should this exemption be granted, ERA will not exclude from the definition of primary energy source any fuel used for the purposes of unit ignition, start-up, testing, flame stabilization, and control of Boilers No. 1 and No. 2.

This recommendation is based upon the petitioner's demonstration pursuant to Sections 212(d) (A) and (B) of the Act that he proposes to use a mixture of RDF, coal, small amounts of hydrogen, No. 6 fuel oil and natural gas as the primary energy source in the units and that the amount of No. 6 fuel oil and natural gas to be used will not exceed 25 percent of the total annual Btu heat input of the primary energy source of each unit.

On the basis of the analysis provided by the Office of Fuels Conversion, and reviewed by the Office of Environment, with consultation from the Office of the General Counsel, DOE has concluded that the granting of this exemption will not be a major federal action significantly affecting the quality of the human environment, within the meaning of the National Environmental Policy Act of 1969. Accordingly, neither an environmental impact statement nor an environmental assessment is required.

Recommended Terms and Conditions: ERA's staff also has tentatively determined and recommends that any order granting the exemption described above should, pursuant to Section 214 of the Act, be subject to the following terms and conditions:

1. The amount of petroleum and natural gas used in Boilers No. 1 and No. 2 shall not exceed 25 percent of the total annual Btu heat input of the primary energy source for each of the units.

2. In accordance with the reporting requirement in Section 503.38(g) of the Final Rules, HCPC will submit an annual report to the Economic Regulatory Administration (ERA), Case Control Unit (Fuel Use Act), Box 4629, Room 3214, 2000 M Street, NW, Washington, DC 20461, each year on the anniversary of the effective date of the exemption, containing the following:

(a) A certification that the amount of petroleum and natural gas used in Boilers No. 1 and No. 2 did not exceed 25 percent of the total annual Btu heat input of the primary energy source of each unit. The certification must be executed by a duly authorized representative of HCPC.

(b) Identification of the actual quantities of coal and RDF (in tons), and petroleum (in Bbls), and hydrogen and natural gas (in Mcf) used in each of the two boilers, as well as the higher heating value (in Btus per lb., per Mcf) of those fuels. The following report format will be used for each unit:

Fuel type	Amount used (tons) (MCF)	Btu equivalent	Percent of annual fuel consumption

The Tentative Staff Determination does not constitute a decision by ERA to grant the exemptions requested. Such a decision shall, in accordance with Section 501.68 of the Final Rules, be based on the entire record of this proceeding, including any comments received on the Tentative Staff Determination.

Issued in Washington, DC on August 8, 1980.

Robert L. Davies,

Assistant Administrator, Office of Fuels Conversion, Economic Regulatory Administration.

[FR Doc. 80-24683 Filed 8-14-80; 8:45 am]

BILLING CODE 6450-01-M

[ERA Case No. 50653-2490-01-82, 50653-2490-01-82]

Consolidated Edison Co. of New York, Inc.; Powerplant and Industrial Fuel Use Act of 1978; Notice of Intention To Proceed With Prohibition Order Proceedings

The Economic Regulatory Administration (ERA) of the Department of Energy hereby gives notice of its intention to proceed with the pending prohibition order proceedings relating to two powerplants, Arthur Kill 20 and 30, owned by Consolidated Edison Company of New York, Inc. (Con Edison) and located at New York, New York.

Pursuant to sections 301(b) and 701(b) of the Powerplant and Industrial Fuel Use Act of 1978 (FUA), 42 U.S.C. 8301 *et seq.*, proposed prohibition orders for Arthur Kill 20 and 30 were issued by

ERA on August 22, 1979, and published in the Federal Register on August 29, 1979 (44 FR 169).

Description of Prohibition Order Proceedings

In accordance with § 501.51 of the implementing FUA regulations applicable to existing powerplants (Regulations), 10 CFR Part 501, publication of the proposed prohibition orders commenced an initial public comment period, during which period Con Edison was given an opportunity to challenge ERA's initial finding that Arthur Kill 20 and 30 had the technical capability to burn an alternate fuel (coal) as a primary energy source. During this period the utility was required to furnish ERA with evidence bearing upon the other statutory findings which ERA must make prior to the issuance of any final prohibition order. The utility must also identify, during this period, any exemptions for which the powerplants may qualify, but the recipient of a proposed order need not, during this period, submit evidence attempting to demonstrate entitlement to an exemption.

The publication of this notice of intention to proceed commences a second three-month period during which Con Edison may present evidence to demonstrate that the powerplants would qualify for an exemption, which would constitute a defense to the issuance of a final prohibition order.

Subsequent to the end of the second three-month comment period ERA will, if it intends to issue a final prohibition order, prepare and publish a Notice of Availability of a Tentative Staff Decision concerning the findings ERA must make prior to issuance of a final prohibition order. Those findings, which are required by section 301(b) of FUA, are (1) that the powerplant has the technical capability to use coal or another alternate fuel as a primary energy source, or it could have such capability without (A) substantial physical modification of the powerplant or (B) substantial reduction in the rated capacity of the powerplant; and (2) that it is financially feasible for the powerplant to use coal or another alternate fuel as its primary energy source.

The provisions of section 701(d) of FUA and § 501.33 of the Regulations afford any interested person an opportunity to request a public hearing on a proposed prohibition order and tentative staff decision. Interested persons wishing a hearing must make their request, in writing, no later than 45 days after publication of the Notice of Availability of the Tentative Staff Decision. If a hearing is requested, the hearing will be held in accordance with Subpart C of 10 CFR Part 501. Interested persons may also submit written comments during this 45 day period.

After the hearing and comment period closes, ERA shall determine whether a final prohibition order will be issued, based upon ERA's review of the entire administrative record. Any final prohibition order, together with a summary of the basis therefor, will be published in the Federal Register. Such order shall not take effect earlier than sixty days after publication.

Comments and Written Submissions Received on Proposed Prohibition Orders

During the initial comment period, comments on the proposed prohibition orders to Arthur Kill 20 and 30 were received from Con Edison, the Public Service Commission of the New York State Department of Public Service (PSC), the New York City Group of the Atlantic Chapter of the Sierra Club (NYC Sierra Club), the NYC Clean Air Campaign, Inc., the president of the Borough of Staten Island and the assemblyman from the 60th District, Staten Island. All of these comments will be fully addressed in ERA's tentative staff decision.

Con Edison states in its comments that it is in complete agreement with the basis purposes of FUA. Con Edison indicates that ERA's proposed prohibition orders to Arthur Kill 20 and 30 are consistent with its energy strategy and has its full support. Further, it states that Arthur Kill 20 and 30 were designed for coal as the primary energy source. The costs associated with its reconversion back to coal burning are acceptable, in view of the reduction in use of imported oil and the substantial economic benefits that will accrue to its customers as a result of the use of coal at these powerplants.

The PSC recommends in its comments that orders to Arthur Kill 20 and 30 be issued promptly and the plants be converted to coal as soon as possible as long as environmental requirements can be met. The PSC comments that in 1979 about 90 percent of Con Edison's installed generating capacity was oil-fired, a proportion far exceeding the national average. The PSC's position in favor of the conversion is based in part on its interest in holding fuel cost increases to a minimum and in diminishing the State's dependence on imported oil.

The NYC Sierra Club submitted comments which neither support nor oppose the proposed orders. The comments focus on (1) the need to develop a comprehensive siting policy before any final prohibition orders are issued, (2) the role that the generic environmental impact statement on FUA should play in the issuance of proposed and final prohibition orders, (3) considerations of the environmental impacts of the proposed orders and (4) the need of the New York City public for complete and centrally located access to all available information on Federal and State activities relating to the conversion.

The comments received from the NYC Clean Air Campaign, Inc., the president of the Borough of Staten Island and the assemblyman from the 60th District, Staten Island, all opposed the proposed prohibition orders primarily for environmental reasons.

During this comment period, neither Con Edison nor any other interested person submitted any information contrary to ERA's initial finding that Arthur Kill 20 and 30 had the technical capability to burn an alternate fuel (coal) as a primary energy source.

In accordance with § 501.51 of the Regulations, Con Edison also submitted evidence relating to the other findings that ERA is required to make under section 301(b) of FUA. During this period Con Edison did not identify or indicate that Arthur Kill 20 and 30 would qualify for any exemption (temporary or permanent) under FUA.

For further information contact:

William L. Webb, Office of Public Information, Economic Regulatory Administration, Department of Energy, 2000 M Street, N.W., Room B-110, Washington, D.C. 20461 (202) 653-4055.

Robert L. Davies, Office of Fuels Conversion, Economic Regulatory Administration, Department of Energy, 2000 M Street, N.W., Room 3002, Washington, D.C. 20461 (202) 653-3649.

Elmer Lee, Existing Powerplants Branch, Office of Fuels Conversion, Economic Regulatory Administration, Department of Energy, 2000 M Street, N.W., Room 3308, Washington, D.C. 20461 (202) 653-3726.

Edward L. Lublin, Office of General Counsel, Department of Energy, Forrestal Building, Room 6G-087, Washington, D.C. 20585 (202) 252-2967.

Issued in Washington, D.C., August 6, 1980.

Robert L. Davies,

Assistant Administrator, Office of Fuels Conversion, Economic Regulatory Administration.

[FR Doc. 80-24680 Filed 8-14-80; 8:45 am]

BILLING CODE 6450-01-M

[ERA Case NO. 50653-2500-01-82, 50653-2500-02-82]

Consolidated Edison Co. of New York, Inc.; Powerplant and Industrial Fuel Use Act of 1978; Notice of Intention To Proceed With Prohibition Order Proceedings

The Economic Regulatory Administration (ERA) of the Department of Energy hereby gives notice of its intention to proceed with the pending prohibition order proceedings relating to two powerplants, Ravenswood 30N and 30S, owned by Consolidated Edison Company of New York, Inc. (Con Edison) and located at New York, New York.

Pursuant to Sections 301(b) and 701(b) of the Powerplant and Industrial Fuel Use act of 1978 (FUA), 42 U.S.C. 8301 *et seq.*, proposed prohibition orders for Ravenswood 30N and 30S were issued by ERA on August 22, 1979, and published in the Federal Register on August 29, 1979 (44 FR 169).

Description of Prohibition Order Proceedings

In accordance with § 501.51 of the implementing FUA regulations applicable to existing powerplants (Regulations), 10 CFR Part 501, publication of the proposed prohibition orders commenced an initial public comment period, during which period Con Edison was given an opportunity to challenge ERA's initial finding that Ravenswood 30N and 30S had the technical capability to burn an alternate fuel (coal) as a primary energy source. During this period the utility was required to furnish ERA with evidence bearing upon the other statutory findings which ERA must make prior to the issuance of any final prohibition order. The utility must also identify, during this period, any exemptions for which the powerplants may qualify, but the recipient of a proposed order need not, during this period, submit evidence attempting to demonstrate entitlement to an exemption.

The publication of this notice of intention to proceed commences a second three-month period during which Con Edison may present evidence to demonstrate that the powerplants would qualify for an exemption, which would constitute a defense to the issuance of a final prohibition order.

Subsequent to the end of the second three-month comment period ERA will, if it intends to issue a final prohibition order, prepare and publish a Notice of Availability of a Tentative Staff Decision concerning the findings ERA must make prior to issuance of a final prohibition order. Those findings, which are required by section 301(b) of FUA, are (1) that the powerplant has the technical capability to use coal or another alternate fuel as a primary energy source, or it could have such capability without (A) substantial physical modification of the powerplant or (B) substantial reduction in the rated capacity of the powerplant; and (2) that it is financially feasible for the powerplant to use coal or another alternate fuel as its primary energy source.

The provisions of Section 701(d) of FUA and § 501.33 of the Regulations afford any interested person an opportunity to request a public hearing on a proposed prohibition order and tentative staff decision. Interested persons wishing a hearing must make their request, in writing, no later than 45 days after publication of the Notice of Availability of the Tentative Staff Decision. If a hearing is requested, the hearing will be held in accordance with Subpart C of 10 CFR Part 501. Interested persons may also submit written comments during this 45 day period.

After the hearing and comment period closes, ERA shall determine whether a final prohibition order will be issued, based upon ERA's review of the entire administrative record. Any final prohibition order, together with a summary of the basis therefor, will be published in the Federal Register. Such order shall not take effect earlier than sixty days after publication.

Comments and Written Submissions Received on Proposed Prohibition Orders

During the initial comment period, comments on the proposed prohibition orders to Ravenswood 30N and 30S were received from Con Edison, the Public Service Commission of the New York State Department of Public Service (PSC), the New York City Group of The Atlantic Chapter of the Sierra Club (NYC Sierra Club) and the NYC Clean Air Campaign, Inc. All of these comments will be fully addressed in ERA's tentative staff decision.

Con Edison states in its comments that it is in complete agreement with the basic purposes of FUA. Con Edison indicates that ERA's proposed prohibition orders to Ravenswood 30N and 30S are consistent with its energy strategy and have its full support. Further, it states that Ravenswood 30N and 30S were designed for coal as the primary energy source with oil as a standby fuel. The costs associated with its reconversion back to coal burning are acceptable, in view of the reduction in use of imported oil and the substantial economic benefits that will accrue to its customers as a result of the use of coal at these powerplants.

The PSC recommends in its comments that orders to Ravenswood 30N and 30S be issued promptly and the plants be converted to coal as soon as possible as long as environmental requirements can be met. The PSC comments that in 1979 about 90 percent of Con Edison's installed generating capacity was oil-fired, a proportion far exceeding the national average. The PSC's position in favor of the conversion is based in part on its interest in holding fuel cost increases to a minimum and in diminishing the State's dependence on imported oil.

The NYC Sierra Club submitted comments which neither support nor oppose the proposed orders. The comments focus on (1) the need to develop a comprehensive siting policy before any final prohibition orders are issued, (2) the role that the generic environmental impact statement on FUA should play in the issuance of proposed and final prohibition orders, (3) considerations of the environmental impacts of the proposed orders and (4) the need of the New York City public for complete and centrally located access to all available information on Federal and State activities relating to the conversion.

The comments received from the NYC Clean Air Campaign, Inc., opposed the proposed prohibition orders primarily for environmental reasons.

During this comment period, neither Con Edison nor any other interested person submitted any information contrary to ERA's initial finding that Ravenswood 30N and 30S had the technical capability to burn an alternate fuel (coal) as a primary energy source.

In accordance with § 501.51 of the Regulations, Con Edison also submitted evidence relating to the other findings that ERA is required to make under Section 301(b) of FUA. During this period Con Edison did not identify or indicate that Ravenswood 30N and 30S would qualify for any exemption (temporary or permanent) under FUA.

FOR FURTHER INFORMATION CONTACT:

William L. Webb, Office of Public Information, Economic Regulatory Administration, Department of Energy, 2000 M Street, NW, Room B-110, Washington, D.C. 20461, (202) 653-4055.

Robert L. Davies, Office of Fuels Conversion, Economic Regulatory Administration, Department of Energy, 2000 M Street, N.W., Room 3002, Washington, D.C. 20461, (202) 653-3649.

Elmer Lee, Existing Powerplants Branch, Office of Fuels Conversion, Economic

Regulatory Administration, Department of Energy, 2000 M Street, NW, Room 3308, Washington, D.C. 20461 (202) 653-3726.

Edward L. Lublin, Office of General Counsel, Department of Energy, Forrestal Building, Room 6G-087, Washington, D.C. 20585, (202) 252-2967.

Issued in Washington, D.C., August 6, 1980.

Robert L. Davies,

Assistant Administrator, Office of Fuels Conversion, Economic Regulatory Administration.

[FR Doc. 80-24681 Filed 8-14-80; 8:45 am]

BILLING CODE 6450-01-M

Hawn Brothers; Action Taken on Consent Order

AGENCY: Economic Regulatory Administration, Department of Energy.

ACTION: Notice of action taken and opportunity for comment on Consent Orders.

SUMMARY: The Economic Regulatory Administration (ERA) of the Department of Energy (DOE) announces action taken to execute a Consent Order and provides an opportunity for public comment on the Consent Order and on potential claims against the refunds deposited in an escrow account established pursuant to the Consent Order.

DATE: Effective Date: July 7, 1980.

COMMENTS: On or before September 15, 1980.

ADDRESS: Send comments to: Wayne I. Tucker, Southwest District Manager, Economic Regulatory Administration, Department of Energy, P.O. Box 35228, Dallas, Texas 75235.

FOR FURTHER INFORMATION CONTACT: Wayne I. Tucker, Southwest District Manager, Economic Regulatory Administration, Department of Energy, P.O. Box 35228, Dallas, Texas 75235, phone 214/767-7745.

SUPPLEMENTARY INFORMATION: On July 7, 1980, the Office of Enforcement of the ERA executed a Consent Order with Hawn Brothers of Corpus Christi and Venus Oil Company of San Antonio. Under 10 C.F.R. § 205.199J(b), the Consent Order which involves a sum of less than $500,000 in the aggregate, excluding penalties and interest, becomes effective upon its execution.

I. The Consent Order

Hawn Brothers, with its office located in Corpus Christi, Texas and Venus Oil Company of San Antonio are firms engaged in crude oil production, and are subject to the Mandatory Petroleum Price and Allocation Regulations at 10 C.F.R., Parts 210, 211, 212. To resolve certain civil actions which could be brought by the Office of Enforcement of the Economic Regulatory Administration as a result of its audit of crude oil sales, the Office of Enforcement, ERA, and Hawn Brothers and Venus Oil Company entered into a Consent Order, the significant terms of which are as follows:

1. The initial period covered by the audit was September 1, 1973 through December 31, 1977 and was extended through March 31, 1980 in order to resolve any additional overcharges that might have occurred subsequent to the original audit period. It included all sales of crude oil which were made during the period.

2. Hawn Brothers allegedly misapplied the provisions of 10 C.F.R. Part 212, Subpart D, when determining the prices to be charged for crude oil; and as a consequence, charged prices in excess of the maximum lawful sales prices resulting in overcharges to its customers.

3. In order to expedite resolution of the disputes involved, the DOE and Hawn Brothers and Venus Oil Company have agreed to a settlement in the amount of $70,000. The negotiated settlement was determined to be in the public interest as well as the best interests of DOE and Hawn Brothers and Venus Oil Company.

4. Because the sales of crude oil were made to refiners and the ultimate consumers are not readily identifiable, the refund will be made through the DOE in accordance with the Consent Order.

5. The provisions of 10 C.F.R. § 205.199J, including the publication of this Notice, are applicable to the Consent Order.

II. Disposition of Refunded Overcharges

In this Consent Order, Hawn Brothers and Venus Oil Company agree to refund, in full settlement of any civil liability with respect to actions which might be brought by the Office of Enforcement, ERA, arising out of the transactions specified in I.1. above, the sum of $70,000 on or before August 6, 1980. Refunded overcharges will be in the form of a certified check made payable to the United States Department of Energy and will be delivered to the Assistant Administrator for Enforcement, ERA. These funds will remain in a suitable account pending the determination of their proper disposition. The DOE intends to distribute the refund amounts in a just and equitable manner in accordance with applicable laws and regulations. Accordingly, distribution of such refunded overcharges requires that only those "persons" (as defined at 10 C.F.R. § 205.2) who actually suffered a loss as a result of the transactions described in the Consent Order receive appropriate refunds. Because of the petroleum industry's complex marketing system, it is likely that overcharges have either been passed through as higher prices to subsequent purchasers or offset through devices such as the Old Oil Allocation (Entitlements) Program, 10 C.F.R. § 211.67. In fact, the adverse effects of the overcharges may have become so diffused that it is a practical impossibility to identify specific, adversely affected persons, in which case disposition of the refunds will be made in the general public interest by an appropriate means such as payment to the Treasury of the United States pursuant to 10 C.F.R. § 205.199I(a).

III. Submission of Written Comments

A. *Potential Claimants:* Interested persons who believe that they have a claim to all or a portion of the refund amount should provide written notification of the claim to the ERA at this time. Proof of claims is not now being required. Written notification to the ERA at this time is requested primarily for the purpose of identifying valid potential claims to the refund amount. After potential claims are identified, procedures for the making of proof of claims may be established. Failure by a person to provide written notification of a potential claim within the comment period for this Notice may result in the DOE irrevocably disbursing the funds to other claimants or to the general public interest.

B. *Other Comments:* The ERA invites interested persons to comment on the terms, conditions, or procedural aspects of this Consent Order. You should send your comments or written notification of a claim to Wayne I. Tucker, Southwest District Manager, Economic Regulatory Administration, Department of Energy, P.O. Box 35228, Dallas, Texas 75235. You may obtain a free copy of this Consent Order by writing to the same address or by calling 214/767-7745.

You should identify your comments or written notification of a claim on the outside of your envelope and on the documents you submit with the designation, "Comments on Hawn Brothers Consent Order." We will consider all comments we received by 4:30 p.m., local time, on September 15, 1980. You should identify any information or data which, in you opinion, is confidential and submit it in accordance with the procedures in 10 C.F.R. § 205.9(f).

Issued in Dallas, Texas on the 6th day of August, 1980.

Wayne I. Tucker,

Southwest District Manager, Economic Regulatory Administration.

[FR Doc. 80-24679 Filed 8-14-80; 8:45 am]

BILLING CODE 6450-01-M

Orange and Rockland Utilities, Inc.; Powerplant and Industrial Fuel Use Act of 1978; Notice of Intention To Proceed With Prohibition Order Proceedings

[ERA Case No. 52181-2629-04-82, 52181-2629-05-82]

The Economic Regulatory Administration (ERA) of the Department of Energy hereby gives notice of its intention to proceed with the pending prohibition order proceedings relating to two powerplants, Lovett 4 and 5, owned by Orange and Rockland Utilities, Inc. (Orange and Rockland) and located at Tompkins Cove, New York.

Pursuant to sections 301(b) and 701(b) of the Powerplant and Industrial Fuel Use Act of 1978 (FUA), 42 U.S.C. 8301 *et seq.*, proposed prohibition orders for Lovett 4 and 5 were issued by ERA on October 24, 1979 and published in the Federal Register on October 29, 1979 (44 FR 210).

Description of Prohibition Order Proceedings

In accordance with § 501.51 of the implementing FUA regulations applicable to existing powerplants (Regulations), 10 CFR Part 501, the proposed prohibition orders commenced an initial public comment period, during which period Orange and Rockland was given an opportunity to challenge ERA's initial finding that Lovett 4 and 5 had the technical capability to burn an alternate fuel (coal) as a primary energy source. During this period the utility was required to furnish ERA with evidence bearing upon the other statutory findings which ERA must make prior to the issuance of a final prohibition order. The utility must also identify, during this period, any exemptions for which the powerplants may qualify, but the recipient of a proposed order need not, during this period, submit evidence attempting to demonstrate entitlement to an exemption.

The publication of this notice of intention to proceed commences a second three-month comment period during which Orange and Rockland may present evidence to demonstrate that the powerplants would qualify for an exemption, which would constitute a defense to the issuance of a final prohibition order.

Subsequent to the end of the second three-month period ERA will, if it intends to issue a final prohibition order, prepare and publish a Notice of Availability of a Tentative Staff Decision concerning the findings ERA must make prior to issuance of a final prohibition order. Those findings, which are required by Section 301(b) of FUA, are (1) that the powerplant has the technical capability to use coal or another alternate fuel as a primary energy source, or it could have such capability without (A) substantial physical modification of the powerplant or (B) substantial reduction in the rated capacity of the powerplant; and (2) that it is financially feasible for the powerplant to use coal or another alternate fuel as its primary energy source.

The provisions of Section 701(d) of FUA and § 501.33 of the Regulations afford any interested person an opportunity to request a public hearing on a proposed prohibition order and tentative staff decision. Interested persons wishing a hearing must make their request, in writing, no later than 45 days after publication of the Notice of Availability of the Tentative Staff Decision. If a hearing is requested, the hearing will be held in accordance with Subpart C of 10 CFR Part 501. Interested persons may also submit written comments during this 45 day period.

After the hearing and comment period closes, ERA shall determine whether a final prohibition order will be issued, based upon ERA's review of the entire administrative record. Any final prohibition order, together with a summary of the basis therefor, will be published in the Federal Register. Such order shall not take effect earlier than sixty days after publication.

Comments and Written Submissions Received on Proposed Prohibition Orders

During the initial comment period, comments on the proposed prohibition orders to Lovett 4 and 5 were received from Orange and Rockland and from residents of Orange and Rockland Counties. Letters from 139 local citizens supported the proposed orders, stating that the burning of coal in Lovett powerplants 4 and 5 will result in fuel oil savings for the United States and reduce the cost of electricity to the consumer. One commenter opposed coal burning at Lovett 4 and 5 primarily because of its potential adverse impacts on the environment and the financial cost of converting and maintaining the units on coal. These comments will be fully addressed in ERA's tentative staff decision.

Orange and Rockland submitted comments which support the proposed orders, provided the reconversion of Lovett 4 and 5 can be accomplished without the imposition of unnecessary and unreasonable regulatory requirements and that Orange and Rockland has the full support of interested Federal and State regulatory agencies. Orange and Rockland also maintains that reconversion of Lovett 4 and 5 can be accomplished in an environmentally acceptable and economically feasible manner.

During this period, neither Orange and Rockland nor any other interested person submitted any information contrary to ERA's initial finding that Lovett 4 and 5 had the technical capability to burn an alternate fuel (coal) as a primary energy source.

In accordance with § 501.51 of the Regulations, Orange and Rockland also submitted evidence relating to the other findings that ERA is required to make under section 301(b) of FUA, and identified those exemptions for which Lovett 4 and 5 may qualify. The temporary exemptions authorized by Section 311 of FUA which Orange and Rockland identified are (1) lack of alternate fuel supply, site limitations and inability to comply with applicable environmental requirements; (2) public interest; and (3) reliability of service. In addition, Orange and Rockland identified the following permanent exemptions for which Lovett 4 and 5 may qualify as authorized by section 312 of FUA: (1) lack of alternate fuel supply, site limitations, and inability to comply with applicable environmental requirements; (2) State or local requirements; (3) certain fuel mixtures containing natural gas or petroleum; and (4) intermediate load.

For further information contact:

William L. Webb, Office of Public Information, Economic Regulatory Administration, Department of Energy, 2000 M Street NW, Room B-110, Washington, D.C. 20461, (202) 653-4055.

Robert L. Davies, Office of Fuels Conversion, Economic Regulatory Administration, Department of Energy, 2000 M Street NW, Room 3002, Washington, D.C. 20461, (202) 653-3649.

Elmer Lee, Existing Powerplants Branch, Office of Fuels Conversion, Economic Regulatory Administration, Department of Energy, 2000 M Street NW, Room 3308, Washington, D.C. 20461, (202) 653-3726.

Marilyn Ross, Office of General Counsel, Department of Energy, Forrestal Building, Room 6G-087, Washington, D.C. 20585, (202) 252-2967.

Issued in Washington, D.C., August 6, 1980.

Robert L. Davies,

Assistant Administrator, Office of Fuels Conversion, Economic Regulatory Administration.

[FR Doc. 80-24682 Filed 8-14-80; 8:45 am]

BILLING CODE 6450-01-M

Payne, Inc.; Action Taken on Consent Order

AGENCY: Economic Regulatory Administration, Department of Energy.

ACTION: Notice of action taken and opportunity for comment on consent order.

SUMMARY: The Economic Regulatory Administration (ERA) of the Department of Energy (DOE) announces action taken to execute a Consent Order and provides an opportunity for public comment on the Consent Order and on potential claims against the refunds deposited in an escrow account established pursuant to the Consent Order.

EFFECTIVE DATE: July 29, 1980.

COMMENTS BY: September 15, 1980.

ADDRESS: Send comments to: Wayne I. Tucker, Southwest District Manager, Economic Regulatory Administration, Department of Energy, P.O. Box 35228, Dallas, Texas 75235, Phone: 214-767-7745.

FOR FURTHER INFORMATION CONTACT: Wayne I. Tucker, Southwest District Manager, Economic Regulatory Administration, Department of Energy, P.O. Box 35228, Dallas, Texas 75235, Phone: 214-767-7745.

SUPPLEMENTARY INFORMATION: On July 29, 1980, the Office of Enforcement of the ERA executed a Consent Order with Payne, Inc., of Oklahoma City, Oklahoma. Under 10 CFR 205.199J(b) a Consent Order which involves a sum of less than $500,000 or more in the aggregate excluding penalties and interest, becomes effective upon its execution.

Because the DOE and Payne, Inc. wish to expeditiously resolve this matter as agreed and to avoid delay in the payment of refunds, the DOE has determined that it is in the public interest to make the Consent Order with Payne, Inc. effective as of the date of its execution by the DOE and Payne, Inc.

I. The Consent Order

Payne Inc. (Payne) is a firm engaged in the production of crude oil and is subject ot the Mandatory Petroleum Price and Allocation Regulations at 10 CFR Parts 210, 211, and 212. To resolve certain civil actions which could be brought by the Office of Enforcement of the Economic Regulatory Administration as a result of its audit of Payne, the Office of Enforcement, ERA and Payne entered into a Consent Order, the significant terms of which are as follows:

1. During the period September 1, 1973 through January 31, 1980, Payne allegedly sold crude oil above allowable prices specified at 10 CFR Part 212, Subpart D.

2. Payne and the DOE have agreed to a settlement of $440,000. Beginning with the first day of August 1980, Payne shall refund $75,000 per month for five months and shall refund $65,000 on the sixth month. The negotiated settlement was determined to be in the public interest as well as the best interest of the DOE and Payne.

3. The Consent Order constitutes neither an admission by Payne that ERA regulations have been violated nor a finding by the ERA that Payne has violated ERA regulations.

4. The provisions of 10 CFR 205.199J, including the publication of this Notice, are applicable to the Consent Order.

II. Disposition of Refunded Overcharges

In this Consent Order, Payne agrees, to refund in full settlement of any civil liability with respect to actions which might be brought by the Office of Enforcement, ERA arising out of the transactions specified in I.1. above, the sum of $440,000 in the manner specified in I.2. above. Refunded overcharges will be in the form of certified checks made payable to the United States Department of Energy and will be delivered to the Assistant Administrator for Enforcement, ERA. The funds will remain in a suitable account pending the determination of their proper disposition.

The DOE intends to distribute the refund amounts in a just and equitable manner in accordance with applicable laws and regulations. Accordingly, distribution of such refunded overcharges requires that only those "persons" (as defined at 10 CFR 205.2) who actually suffered a loss as a result of the transactions described in the Consent Order receive appropriate refunds. Because of the petroleum industry's complex marketing system, it is likely that overcharges have either been passed through as higher prices to subsequent purchasers of offset through devices such as the Old Oil Allocation (Entitlements) Program, 10 CFR 211.67. In fact, the adverse effects of the overcharges may have become so diffused that it is a practical impossibility to identify specific, adversely affected persons, in which case disposition of the refunds will be made in the general public interest by an appropriate means such as payment to the Treasury of the United States pursuant to 10 CFR 205.199I(a).

III. Submission of Written Comments

A. *Potential Claimants:* Interested persons who believe that they have a claim to all or a portion of the refund amount should provide written notification of the claim to the ERA at this time. Proof of claims is not being required. Written notification of the ERA at this time is requested primarily for the purpose of identifying valid potential claims to the refund amount. After potential claims are identified, procedures for the making of proof of claims may be established. Failure by a person to provide written notification of a potential claim within the comment period for this Notice may result in the DOE irrevocably disbursing the funds to other claimants or to the general public interest.

B. *Other Comments:* The ERA invites interested persons to comment on the terms, conditions, or procedural aspects of this Consent Order. You should send your comments or written notification of a claim to Wayne I. Tucker, Southwest District Manager, Economic Regulatory Administration, Department of Energy, P.O. Box 35228, Dallas, Texas 75235. You may obtain a free copy of this Consent Order by writing to the same address or by calling 214/767-7745.

You should identify your comments or written notification of a claim on the outside of your envelope and on the documents you submit with the designation "Comments on the Payne Inc. Consent Order." We will consider all comments we received by 4:30 p.m., local time September 15, 1980. You should identify any information or data which, in your opinion, is confidential and submit it in accordance with the procedures in 10 CFR 205.9(f).

Issued in Dallas, Texas on the 7th day of August, 1980.

Wayne I. Tucker,

Southwest District Manager, Economic Regulatory Administration.

[FR Doc. 80-24771 Filed 8-14-80; 8:45 am]

BILLING CODE 6450-01-M

Issuance of Decisions and Orders; Office of Hearings and Appeals; Week of June 9 Through June 13, 1980

During the week of June 9 through June 13, 1980, the decisions and orders summarized below were issued with respect to appeals and applications for exception or other relief filed with the

Office of Hearings and Appeals of the Department of Energy. The following summary also contains a list of submissions that were dismissed by the Office of Hearings and Appeals.

Appeals

Acomi Corp., Marblehead, Mass., DEA-0373, DES-0373, motor gasoline

Acomi Corporation (Acomi) filed an Appeal and an Application for Stay which, if granted, would result in the modification of an Order issued by the DOE Economic Regulatory Administration, Region I, on April 10, 1979 which assigned Atlantic Richfield Company and Getty Oil Company to supply motor gasoline to Acomi during the months of April and May 1979. In considering the request, the DOE found that the April 10 Order was issued pursuant to an April 4, 1979 Decision and Order of the Office of Hearings and Appeals, which granted Acomi's earlier Application for Stay. The Appeal and Application for Stay were dismissed because the April 4 Decision and Order which underlay the April 10 Order was subsequently rescinded in a Supplemental Order issued on September 19, 1979.

Aztex Energy Co., Cities Service Co., Knoxville, Tenn., Tulsa, Okla., BEA-0336, BEA-0342, BED-1068, motor gasoline

Aztex Energy Company (Aztex) and Cities Service Company (Cities) filed Appeals from a Temporary Assignment Order which the Economic Regulatory Administration Office of Petroleum Operations (OPO), Region IV, issued on March 21, 1980, pursuant to the provisions of 10 C.F.R. § 205.39. Aztex also filed a Motion for Discovery in which the firm requested permission to depose the Acting Director of OPO Region IV. The Temporary Assignment Order directed Murphy Oil Corporation and Cities each to supply motor gasoline to Sexton Oil Company (Sexton) during a sixty-day period beginning on March 24, 1980 and had the effect of temporarily replacing Aztex as a base-period supplier of Sexton. In considering the Appeals, the DOE determined that the April 17, 1980 Decision and Order which stayed the Temporary Assignment Order contained a thorough discussion of the issues raised in the firms' Appeals and that nothing subsequently added to the record in the case warranted a modification of the conclusions reached in that Decision. Accordingly, the Appeals were granted and the Temporary Assignment Order rescinded. The DOE also determined that an investigation of the underlying factual basis for the Temporary Assignment Order was no longer necessary to enable Aztex to fashion an effective administrative appeal since this Decision and Order granted Aztex's Appeal. The Motion for Discovery was therefore dismissed.

Batla, Raymond, Jr., Wash., D.C. BFA-0357, freedom of information

Raymond J. Batla, Jr. filed an Appeal from a denial by the Director, Division of FOI and Privacy Acts Activities, Department of Energy, of a request for information which he had submitted under the Freedom of Information Act (FOIA), seeking copies of the Economic Regulatory Administration Enforcement Manual (Enforcement Manual). In considering the Appeal, the DOE found as an initial matter that subsection (a)(2)(C) of the FOIA was not intended to function as an exemption to the FOIA's mandatory disclosure requirement. The DOE also found that certain deleted portions of the Enforcement Manual were not protected from disclosure under Exemption 2 because their audit instructions were so general in nature that their release would not aid firms in circumventing DOE regulations. Accordingly, the DOE determined that these portions of the Enforcement Manual must be disclosed. With respect to the portions of the Enforcement Manual legitimately withheld under Exemption 2, the DOE found that the public interest in disclosure is outweighed by the public interest in effective enforcement of the price regulations to be served by maintaining the confidentiality of certain sensitive audit practices.

Exxon Co., U.S.A. Wash., D.C., BEA-0265, motor gasoline

Exxon Company, U.S.A (Exxon) filed an Appeal of a February 5, 1980 Order for the Redirection of Product issued by the Region IV Office of Petroleum Operations in Atlanta, Georgia. The Redirection Order required Exxon to supply 12,480 gallons of motor gasoline to Keystone Cargo Gas (Keystone), a retail service station in Keystone Heights, Florida, for the month of January 1980. Exxon contended that the Order was deficient because it failed to demonstrate that Keystone satisfied the criteria for issuance of such an Order pursuant to 10 C.F.R. § 211.107(c) and that, even if the Order were warranted, Exxon was neither a logical nor appropriate supplier of the supplementary volumes of motor gasoline.

The DOE determined that the Redirection Order contained an adequate factual and legal basis for its issuance and concluded that the Region IV Office of Petroleum Operations had not erred in its choice of Exxon to supply Keystone. In addition, the DOE suggested that in future Redirection and Assignment Order proceedings, the Regional Offices more thoroughly apprise the affected parties of the factors considered and the sequence of processing each type of application and that those Offices supply upon request monthly summaries of each category of order indicating total volumes and numbers issued by the Region and the volumes and numbers of orders received by each supplier.

Hogan & Hartson, Wash., D.C., BFA-0356, fredom of information

Hogan & Hartson filed an Appeal from a partial denial by the Director, Division of Petroleum Price Regulations, Office of Regulations and Emergency Planning Economic Regulatory Administration, of a Request for Information concerning certain aspects of the DOE's crude oil reseller regulation which the firm had submitted under the Freedom of Information Act (FOIA). In considering the Appeal, the DOE found that the Director has properly withheld the documents under Exemption 5 since they were recommendatory predecisional intra-agency documents whose release would be contrary to the public interest in unfettered discussions regarding proposals for improvements in existing regulations. In addition, the DOE found that the Director's descriptions of the withheld documents were adequate and that appellant's arguments concerning the adequacy of the DOE's search were premature since the Director's determination was only a partial departmental response limited to documents from the Division's own files.

Marathon Oil Co., Findlay, Ohio, DEA-0621, thru 0624; BEA-0008, thru 0016; BEA-0049 motor gasoline

Marathon Oil Company filed thirteen Appeals of Orders for the Redirection of Product which were issued to the firm by the Region IV Office of Petroleum Operations pursuant to 10 C.F.R. § 211.107(c). In considering the Appeals, the DOE determined that the Orders did not include adequate findings concerning the unavailability of motor gasoline in the applicants' marketing areas or the efforts of the applicants to obtain motor gasoline from sources other than their normal base-period suppliers. Accordingly, the Appeals were remanded to the Region IV Office of Petroleum Operations for further consideration consistent with the principles discussed in the Decision.

Rural Legal Services of Tennessee, Inc., Oak Ridge, Tenn., BFA-0338, freedom of information

Rural Legal Services of Tennessee, Inc., filed an Appeal from a partial denial by the Oak Ridge Operations Office, Department of Energy, of a request for information which it had submitted under the Freedom of Information Act, seeking copies of three affirmative action plans submitted to the Department by a DOE contractor. In considering the Appeal, the DOE found as an initial matter that the provisions of Exemption 4 which protect sensitive proprietary date are at least as broad as the provisions of the Trade Secrets Act and that therefore the DOE need not consider the applicability of Exemption 3, which exempts from mandatory disclosure under the FOIA information specifically protected by statute. The DOE also found the certain deleted portions of the affirmative action plans which concerned the contractor's work force at its DOE facilities, should be disclosed. The DOE also determined that the Oak Ridge Operations Office properly withheld certain other information concerning the contractor's promotion goals for minority and female employees and pay ranges for all the firm's employees because release of that data could cause substantial competitive injury to the contractor by damaging employee morale.

Science Management Corp., Landover, Md., BFA-0354 freedom of information

The Science Management Corporation filed an Appeal from a partial denial by the DOE Office of Procurement Operations of a request for information that the firm had submitted under the Freedom of Informaiton Act seeking a copy of a winning technical proposal for a DOE contract. In considering the Appeal, the DOE found that the explanation of the Office of Procurement Operations withholding portions of the

requested information pursuant to Exemption 4 was conclusory and inadequate. Accordingly, the matter was remanded to that Office with instructions to release the withheld portions of the proposal or to provide an adequate explanation of why any deleted information is properly exempt from mandatory disclosure.

Requests for Exception

Aminoil U.S.A., Inc., Wash., D.C. BXE-0678, crude oil

Aminoil U.S.A., Inc. filed an Application for Exception from the provisions of 10 CFR Part 212, Subpart D. In order to provide the firm with an incentive to continue its production activities, the DOE granted an extension of exception relief to permit Aminoil U.S.A., Inc. to sell at upper tier ceiling prices 49.924 percent of the crude oil produced and sold for the benefit of the working interest owners from the California State Lease 392, Lower Main Zone, during the period from March 1, 1980 through August 31, 1980.

Energy Cooperative, Inc., Wash., D.C., DEE-2816, crude oil

Energy Cooperative, Inc. (ECI) filed an Application for Exception from the provisions of C.F.R. § 211.65 in which the firm sought to purchase up to 25,000 barrels per day of crude oil under the DOE Crude Oil Buy/Sell Program during the period April through September 1979. In considering the request, the DOE found that exception relief was necessary to alleviate the gross inequity being experienced by agricultural and other rural customers of ECI's regional cooperatives because of ECI's lack of access to sufficient quantities of reasonably priced crude oil for its refinery. Accordingly, exception relief was granted permitting ECI to purchase 3,316,829 barrels of crude oil under the Buy/Sell Program for the period April through September 1979. Important issues discussed in the Decision and Order are whether refiner-sellers had adequate notice of ECI's exception request and whether an exception proceeding was an appropriate procedure for resolving ECI's crude oil supply difficulties.

Gas 'N' Save, Inc., Findlay, Oh., BEO-0765, motor gasoline

Gas 'N' Save, Inc. filed an Application for Exception from the provisions of 10 C.F.R. § 211.102 in which the firm sought an increase in its base-period allocation of motor gasoline. In considering the request, the DOE found that the firm had failed to submit any evidence to document its claim that it would experience a gross inequity in the absence of exception relief. The DOE also determined that the firm had failed to establish its contention that in the absence of an increase in its base-period allocation, large trucks would be unable to purchase adequate supplies of motor gasoline in the Gas 'N' Save market area. Accordingly, exception relief was denied.

Go-c-us, Kennewick, Wash., BEO-0803, motor gasoline

Go-c-us filed an Application for Exception from the provisions of 10 C.F.R. § 211.102 in which the firm sought an increase in its base-period allocation of motor gasoline. In considering the request, the DOE determined that in the absence of exception relief the firm would remain a viable business entity. The DOE also determined that Go-c-us leased the outlet subsequent to the establishment of the updated base period and concluded that the firm should have had no reason to believe that it would receive additional quantities of motor gasoline. Finally, the DOE determined that the owner of the station was not entitled to transfer to the Go-c-us outlet the volumes assigned to a station which he formerly operated.

Jeff Davis Service Co., Richmond, Va., BEO-1021, motor gasoline

Jeff Davis Service Co. filed an Application for Exception from the provisions of 10 C.F.R. § 211.102 in which the firm sought an increase in its base-period allocation of motor gasoline. In considering the request, the DOE found that the capital expenditures for the purchase of certain automotive repair and service equipment which the firm made in March and April, 1979 were not of a kind which would be expected to result in increased sales of motor gasoline. In addition, the DOE found that Jeff Davis Service had failed to demonstrate that it is experiencing a serious financial hardship attributable to the DOE motor gasoline allocation regulations. Accordingly, exception relief was denied.

John's Exxon Service, Stockton, California, BRO-0702, motor gasoline

John's Exxon Service filed an Application for Exception from the provisions of 10 CFR § 211.102 in which the firm sought an increase in its base-period allocation of motor gasoline. In considering the request, the DOE determined that the firm leased the outlet and invested in inventory and equipment for the outlet after the establishment of the updated base period. The DOE therefore concluded that the firm should have had no reason to believe that it would receive additional quantities of motor gasoline. Accordingly, exception relief was denied.

Supplemental Order

Commonwealth Oil Refining Company, Inc., San Antonio, Texas, BEX-0059, crude oil

The Commonwealth Oil Refining Company, Inc. (Corco) filed a Motion to Strike Supplemental Comments filed by Texaco, Inc. (Texaco) in opposition to a Proposed Decision and Order granting exception relief to Corco. In its Motion, Corco argued that the Supplemental Comments were unauthorized and untimely, since they were not explicitly authorized by DOE regulations and since they were submitted after the deadline for the filing of Statements of Objection. Corco also contended that Texaco's Supplemental Comments violated the terms of a prior Stipulation of Protective Order and a Protective Order subsequently issued by the DOE. In considering the Motion, the DOE found that the availability of new information after the deadline for filing Statements of Objections constituted good cause for authorizing the Texaco submission and for an extension of time. The DOE further found that ambiguities in the Stipulation of Protective Order precluded a finding that Texaco had violated either the Stipulation or the subsequent DOE Protective Order. Accordingly, the Corco Motion was denied.

Interim Orders

Eagle Oil Company, Waurika, Oklahoma, BEN-0026, gasohol

Eagle Oil Company filed a Motion for an Interim Order, requesting immediate implementation of exception relief which the DOE tentatively granted the firm in a Proposed Decision and Order issued on January 31, 1980. That Proposed Decision and Order had tentatively granted Eagle an additional allocation of unleaded gasoline for use in its gasohol program upon a finding that such exception relief was necessary to prevent the firm from suffering a gross inequity under the DOE regulatory program. In response to Eagle's Motion, the DOE issued an Interim Order which immediately implements a portion of the proposed exception relief pending a final decision on Eagle's Application for Exception. The DOE found that there was a reasonable probability that exception relief would ultimately be granted and that the financial harm to Eagle in the absence of immediate relief outweighed any harm that might accrue to other persons from approval of interim relief.

Red Rock Petroleum Co., Inc., Oklahoma City, Oklahoma, BEN-0337; gasohol

Red Rock Petroleum Company, Inc. filed a Motion for an Interim Order, requesting immediate implementation of the exception relief which the DOE tentatively granted the firm in a Proposed Decision and Order issued on March 28, 1980. That Proposed Decision and Order had tentatively granted Red Rock an additional allocation of unleaded gasoline for use in its gasohol program. However, the DOE found that, in view of substantial objections raised by proposed suppliers, Red Rock failed to demonstrate that the proposed determination is likely to be issued in final form without modifications or that the firm would suffer serious harm in the absence of the Interim Order. Accordingly, the DOE denied Red Rock's Motion for an Interim Order.

Protective Order

The following firm filed an Application for Protective Orders. The application, if granted, would result in the issuance by the DOE of the proposed Protective Order submitted by the firms. The DOE granted the following application and issued the requested Protective Order as an Order of the Department of Energy:

Name, Location, and Case No.

Pennzoil Co., Tosco Corp., Washington, D.C., BEJ-0091

Petition Involving the Motor Gasoline Allocation Regulations

The following firm filed an Application for Exception from the provisions of the Motor Gasoline Allocation Regulations. The request, if granted, would result in an increase in the firm's base-period allocation of motor gasoline. The DOE issued a Decision and Order which determined that the request be granted.

Name, Location, and Case No.

State Line Marina, Lambertville, MI, BEO-0525

Petitions Involving the Motor Gasoline Allocation Regulations

The following firms filed Applications for Exception, Temporary Exception, Stay, and/or Temporary Stay from the provisions of the Motor Gasoline Allocation Regulations. The requests, if granted, would result in an increase in the firms' base-period allocation of motor gasoline. The DOE issued Decisions and Orders which determined that the requests be denied.

Company Name, Location, and Case No.

Classic Arco, Pittsburgh, PA, BEO-0549
Destin Gulf Service, Destin, FL, BEO-0571
Don Gay Mobil Service, Salinas, CA, BEO-0823
Leesburg Road Exxon, Columbia, SC, BEO-0046
New Jersey Bell Telephone Co., Newark, NJ, BEE—0118
One Stop Gulf, Havre de Grace, MD, DEE—4926
Sandy Oil Co., Sandy, OR, BEO-0659

Dismissals

The following submissions were dismissed without prejudice to refiling at a later date:

Company Name and Case No.

Gas World No. 2, BEE-0808
Graves Enterprises, Inc., BEE-0921
Independent Distributing Service, BEE-1072
Lenawee Fuels, Inc., DEE-7897
Mobil Oil Corp., BED-0294
Office of Enforcement, GRS-0277
Perrine Oils, BEE-0846
Quik Stop Food Stores, Inc., BED-0978
Radiant Oil Co. of Tampa, Inc., DSG-0069
Reed Oil Company, DEE-6866, DES-6866, DST-6866
Self Enterprises, Inc., BEE-0490
United Refining Co., BES-0361

Copies of the full text of these decisions and orders are available in the Public Docket Room of the Office of Hearings and Appeals, Room B-120, 2000 M Street, N.W., Washington, D.C. 20461, Monday through Friday, between the hours of 1:00 p.m. and 5:00 p.m., except federal holidays. They are also available in *Energy Management: Federal Energy Guidelines*, a commercially published loose leaf reporter system.

Thomas L. Wieker,

Deputy Director, Office of Hearings and Appeals.

August 8, 1980.

[FR Doc. 80-24685 Filed 8-14-80; 8:45 am]
BILLING CODE 6450-01-M

Objection To Proposed Remedial Orders Filed; Week of June 23 Through June 27, 1980

During the week of June 23 through June 27, 1980, the notices of objection to proposed remedial orders listed in the Appendix to this Notice were filed with the Office of Hearings and Appeals of the Department of Energy.

Any person who wishes to participate in the proceeding the Department of Energy will conduct concerning the proposed remedial orders described in the Appendix to this Notice must file a request to participate pursuant to 10 CFR § 205.194 on or before September 4, 1980. The Office of Hearings and Appeals will then determine those persons who may participate on an active basis in the proceeding and will prepare an official service list, which it will mail to all persons who filed requests to participate. Persons may also be placed on the official service list as non-participants for good cause shown.

All request to participate in these proceedings should be filed with the Office of Hearings and Appeals, Department of Energy, Washington, D.C. 20461.

Thomas L. Wieker

Acting Director, Office of Hearings and Appeals.

August 7, 1980.

Art Gordon Chevron, San Mateo, Calif., BRO-1245, Motor Gasoline.

On June 24, 1980, Art Gordon Chevron, 2009 El Camino Real, San Mateo, California 94403 filed a Notice of Objection to a Proposed Remedial Order which the DOE Western District Office of Enforcement issued to the firm on June 12, 1980.

In the PRO the Western District found that during April 15, 1980 to May 16, 1980, the firm committed pricing violations amounting to $2,463.63 in connection with the sale of motor gasoline in the State in California.

Atlantic Richfield Co., Los Angeles, Calif., BRO-1247, Crude Oil.

On June 20, 1980, The Atlantic Richfield Company (ARCO), 515 South Flower Street, Los Angeles, California 90017 filed a Notice of Objection to a Proposed Remedial Order which the DOE Special Counsel issued to the firm on May 15, 1980.

In the PRO the Special Counsel found that ARCO improperly computed the costs of import fees and duties in calculating increased product costs under the refiner price rules in 10 CFR, Part 212, Subpart E between August 20, 1973 and December 31, 1977. ARCO is charged with overstating its increased costs of crude oil by 57.6 million in violation of 10 CFR 212.82, 212.83, and 212.126(b).

Buchanan Shell, Inc., Pittsburg, Calif., BRO-1250, Motor Gasoline.

On June 24, 1980, Buchanan Shell, Inc., 1315 Buchanan Rd., Pittsburg, California 94565 filed a Notice of Objection to a proposed Remedial Order which the DOE San Francisco District Office of Enforcement issued to the firm on June 11, 1980.

In the PRO the San Francisco District found that during August 1, 1979 to November 13, 1979, the firm charged prices for motor gasoline in excess of the legally allowable maximum price specified in 10 CFR Part 212. Furthermore, the firm refused to make its records available for inspection by DOE officials as specified by 10 CFR 210.92(b).

According to the PRO the Buchanan Shell, Inc. violation resulted in $2,588.37 of overcharges.

Decota's Redhill Union 76, San Anselmo, Calif., BRO-1246, Motor Gasoline.

On June 24, 1980, Decota's Redhill Union 76, 930 Sir Francis Drake Blvd., San Anselmo, California 94960 filed a Notice of Objection to a Proposed Remedial Order which the DOE San Francisco District Office of Enforcement issued to the firm on June 11, 1980.

In the PRO the San Francisco District Office found that during August 1, 1979 to November 13, 1979, the firm charged prices for motor gasoline in excess of the legally allowable maximum specified in 10 CFR Part 212. Furthermore, the firm refused to make its records available for inspection by DOE officials as provided in 10 CFR 210.92(b).

According to the PRO the Decota's Redhill Union 76 violation resulted in $809.43 of overcharges.

Fred Hartmann's, Hayward, Calif., BRO-1248, Motor Gasoline.

On June 24, 1980, Fred Hartmann's Chevron, 505 A Street, Hayward, California 94541 filed a Notice of Objection to a Proposed Remedial Order which the DOE San Francisco District Office of Enforcement issued to the firm on June 11, 1980.

In the PRO the San Francisco District Office found that during April 19, 1980 to May 19, 1980, the firm engaged in business practices in violation of 10 CFR 210.62(d), as well as charging prices for motor gasoline which exceeded the legal maximum under 10 CFR Part 212.

According to the PRO the Fred Hartmann's Chevron violation resulted in $802.21 of overcharges.

Gene's Chevron, San Anselus, Calif., BRO-1251, Motor Gasoline.

On June 24, 1980, Gene's Chevron, 101 Redhill Avenue, San Anselus, California 94960 filed a Notice of Objection to a Proposed Remedial Order which the DOE San Francisco District Office of Enforcement issued to the firm on June 11, 1980.

In the PRO the San Francisco District Office found that during August 1, 1979 to November 13, 1979, the firm charged prices for motor gasoline in excess of the maximum legally allowable specified in 10 CFR Part 212. Furthermore, the firm refused to make its records available for inspection by DOE officials as provided by 10 CFR 210.92(b).

According to the PRO the Gene's Chevron violation resulted in $2,045.43 of overcharges.

Telum, Inc., Salt Lake City, Utah, BRO-1244, Motor Gasoline.

On June 23, 1980, Telum, Inc., 3227 North Canyon Road, Provo, Utah 84601 filed a Notice of Objection to a Proposed Remedial Order which the DOE Rocky Mountain District Office of Enforcement issued to the firm on May 28, 1980.

In the PRO the Rocky Mountain District found that during December 1, 1973 to April 30, 1974, Telum, Inc. sold middle distillate

fuel to Salt River Project at prices in excess of the maximum lawful selling prices allowed by the applicable regulations during the audit period.

According to the PRO the Telum, Inc. violation resulted in $302,692.69 of overcharges.

Wolfe's Union Service, Hayward, Calif., BRO-1249, Motor Gasoline.

On June 24, 1980, Wolfe's Union Service, 28250 Hesperian Blvd., Hayward, California 94541 filed a Notice of Objection to a Proposed Remedial Order which the DOE San Francisco District Office of Enforcement issued to the firm on June 11, 1980.

In the PRO the San Francisco District Office found that during August 1, 1979 to November 13, 1979, the firm charged prices for motor gasoline in excess of the legally allowable maximum price specified in 10 CFR Part 212. Furthermore, the firm refused to make its records available for inspection by DOE officials as specified by 10 CFR 210.92(b).

According to the PRO the Wolfe's Union Service violation resulted in $686.65 of overcharges.

[FR Doc. 80-24687 Filed 8-14-80; 8:45 am]
BILLING CODE 6450-01-M

Issuance of Decisions and Orders; Week of June 23 Through June 27, 1980

During the week of June 23 through June 27, 1980, the decisions and orders summarized below were issued with respect to appeals and applications for exception or other relief filed with the Office of Hearings and Appeals of the Department of Energy. The following summary also contains a list of submissions that were dismissed by the Office of Hearings and Appeals.

Appeals

Fried, Frank, Harris, Shriver & Kampelman, Washington, D.C., BFA-0372, freedom of information.

On May 29, 1980, Fried, Frank, Harris, Shriver & Kampelman filed an Appeal from a partial denial issued to the firm by the Director, Division of Petroleum Price Regulations, Office of Regulations and Emergency Planning, of the ERA of a request for information that the firm had submitted under the Freedom of Information Act. In considering the Appeal, the DOE found that the document at issue fell within Exemption 5 and that its release would be contrary to the public interest. Accordingly, the Appeal was denied.

Barbara Rother Hedges, Washington, D.C., BFA-0371, freedom of information.

Barbara Rother Hedges filed an Appeal from a denial by the Deputy Assistant Administrator for Enforcement of the ERA of a request for three revisions of the ERA Enforcement Manual which she sought pursuant to the Freedom of Information Act. In considering the Appeal, the DOE found that the documents that were initially withheld under Exemption 2 and 10 C.F.R. § 552(a)(2)(C) should be released to the public.

Craig D. Miller, Washington, D.C., BFA-0368, freedom of information.

Craig D. Miller appealed from a denial by the Disclosure Officer of the Office of Special Counsel of a request for information that Mr. Miller had submitted pursuant to the Freedom of Information Act. In considering the Appeal, the DOE found that the Disclosure Officer acted correctly in withholding 209 documents pursuant to Exemption 5. The DOE also found, however, that portions of four documents consisted of reasonably segregable factual material which should be released and that disclosure of a portion of a fifth document would not be contrary to the public interest.

Charles Varon, San Francisco, Calif., BFA-0364 Freedom of Information.

Charles Varon filed an Appeal from a denial by the DOE Region IX FOI Officer of a Request for Information which the firm had submitted under the Freedom of Information Act (the FOIA). In considering the Appeal, the DOE found that an adequate search of DOE records had not been conducted and remanded the case to conduct a further search.

Petition for Special Redress

Genico Distributors, Inc., Austin, Tex., BSG-0024, BST-0024, crude oil

Genico Distributors, Inc. filed a Petition for Special Redress and an Application for Temporary Stay in which it requested that the Office of Hearings and Appeals grant a temporary stay and conduct a review of an April 25, 1980 subpoena *duces tecum* issued to the firm by the Dallas Office of Special Investigations of the Department of Energy. In considering the firm's Petition, the Office of Hearings and Appeals noted that the DOE procedural regulations provide at 10 C.F.R. § 205.8(b)(6) that there is no administrative appeal of a subpoena. Consequently, the DOE found that it would not be appropriate for the Office of Hearings and Appeals to review the Genico subpoena in the absence of a compelling showing by the applicant that extraordinary circumstances exist. The DOE found that the petitioner's contentions that extraordinary circumstances existed were without merit. Accordingly, the firm's Petition for Special Redress was dismissed, and its Application for Temporary Stay was denied.

Request for Exception

B & B Oil Co., Spokane, Wash., DEE-5854, motor gasoline

B & B Oil Company filed an Application for Exception from the provisions of 10 C.F.R., Part 211 in which the firm sought an increase in its base period allocation of motor gasoline. In considering the request, the DOE issued a Proposed Decision and Order in which it found that exception relief was necessary to prevent B & B from experiencing a serious financial hardship as a result of the DOE motor gasoline allocation regulations. Subsequent to the issuance of the proposed determination, Amoco Oil Company, B & B's base period supplier, filed a Statement of Objections in which it claimed that it did not have a source of motor gasoline in B & B's market area to satisfy the terms of the Proposed Decision. Upon review of the record, the DOE concluded that Amoco had failed to substantiate its claim that it could not fulfill its increased supply obligations. Specifically, the DOE noted that Amoco could make spot market purchases on behalf of B & B. Accordingly, Amoco's Statement of Objections was denied and exception relief was granted to B & B.

Connecticut General Life Insurance Co., Hartford, Conn., DEE-7699, motor gasoline

Connecticut General Life Insurance Company filed an Application for Exception from the provisions of 10 C.F.R., Part 211, in which the firm sought an increase in its base period allocation of motor gasoline. In considering the firm's request, the DOE found that exception relief was appropriate in order to enable the firm to supply, through its own retail outlet, its van pool vehicles with product before selling the remainder of its allocation to employees for use in their personal vehicles. The DOE found no basis, however, for increasing the outlet's allocation. Accordingly, the firm was granted an exception from the provisions of 10 C.F.R. § 210.62 in order to permit it to reserve each month those volumes of gasoline necessary for use in its van pool program, and to supply those volumes to its vans on a preferred basis.

Dearborn Stove Co., Garland, Tex., BEE-0883, test procedures

Dearborn Stove Company filed an Application for Exception from the provisions of 10 C.F.R., Part 430, Appendix O in which it requested that it not be required to perform energy efficiency and consumption tests on certain types of vented home-heating equipment which it manufactures. In considering the firm's request, the DOE found that the test procedures applicable to Dearborn's vented home heating equipment yielded inaccurate and unrepresentative estimates of the products' actual energy efficiency, thereby imposing a gross inequity on the firm. Accordingly, the Dearborn exception request was granted.

Hardell Corp., Hagerstown, Md., DEE-4499, No. 2 hearing oil

Hardell Corporation filed an Application for Exception from the reporting requirements set forth in Form EIA-9 ("No. 2 Heating Oil Supply/Price Monitoring Report") in which the firm sought to be relieved of any obligation to prepare and submit Form EIA-9. In considering the request, the DOE found that the firm was not being adversely affected by the reporting requirements of Form EIA-9 and that any burden which Hardell might encounter in completing the form was not significantly different from that encountered by other firms which have also been selected to file Form EIA-9. The DOE also found that Hardell had failed to demonstrate that the burden of providing the requested data exceeded the benefits which would be realized from the information. Accordingly, exception relief was denied.

Joe's Auto Service Center, St. Cloud, Fla., DEE-7672, Motor Gasoline.

Joe's Auto Service Center filed an Application for Exception from the provisions of 10 CFR, Part 211, in which the firm sought an increased base period allocation of motor gasoline. In considering the request, the DOE found that the firm had failed to demonstrate either that an increase in its sales was attributable to a significant alteration in its ongoing business practices, or that the firm would be adversely affected by the denial of exception relief. Accordingly, exception relief was denied.

Koch Industries, Inc., Wichita, Kans., BXE-0687, Crude Oil.

Koch Industries, Inc. filed an Application for Exception from the provisions of 10 CFR, Part 212, Subpart D. Exception relief was granted to permit Koch Industries, Inc. to sell 100 percent of the crude oil produced from the Sink Draw No. 1 lease at Upper Tier Ceiling prices.

Miramar Shell, Miramar, Fla., BEO-0018, Motor Gasoline.

On September 26, 1979, Miramar Shell filed an Application for Exception from the provisions of 10 CFR, Part 211, in which the firm sought an increase in its base period allocation of motor gasoline. In considering the request, the DOE found that the firm would not be significantly adversely affected in the absence of exception relief. Accordingly, the firm's exception request was denied.

Rainbow Car Wash, Madison, S. Dak., DEE-6044, Motor Gasoline.

Rainbow Car Wash filed an Application for Exception from the provisions of 10 CFR, Part 211, in which the firm sought an increased base period allocation of motor gasoline. In considering the request, the DOE found that the firm had failed to demonstrate that its base period allocation of motor gasoline was unreflective of the firm's actual level of purchases. Accordingly, exception relief was denied.

SmithKline Clinical Laboratories, Inc., Waltham, Mass., DEE-5436, Motor Gasoline.

SmithKline Clinical Laboratories, Inc. filed an Application for Exception from the provisions of 10 CFR, Part 211, in which the firm sought an increase in its base period volume of motor gasoline. In considering the request, the DOE found that the firm had not shown that it was unable to purchase surplus gasoline. The DOE also determined that the denial of SmithKline's request would not endanger the public health of the citizens of New England. Accordingly, exception relief was denied.

Townsend Full Service, Woodward, Okla., BEO-1077, motor gasoline.

Townsend Full Service filed an Application for Exception from the provisions of 10 CFR, Part 211, in which the firm sought an increase in its base period allocation of motor gasoline. In considering the request, the DOE found that although an anomalous event did occur during the base period, the firm is able to realize a reasonable profit from the operation of its outlet. Accordingly, exception relief was denied.

TRW, Inc., Redondo Beach, Calif, BEO-0474, motor gasoline.

On August 22, 1979, TRW, Inc. (TRW) filed an Application for Exception from the provisions of 10 CFR, Part 211, in which the firm sought an increase in its base period allocation of motor gasoline. In considering the request, the DOE found that the firm was not experiencing a serious hardship, gross inequity or unfair distribution of burdens as a result of the operation of the DOE regultory program. Accordingly, exception relief was denied.

Wagoner Gas & Oil, Inc., W. Newton, Pa., DEE-4837, motor gasoline.

Wagoner Gas & Oil, Inc. filed an Application for Exception from the provisions of 10 CFR, Part 211, in which the firm sought an increase in the base period allocation of several gasoline retail outlets which Wagoner owns and operates. In considering the request, the DOE found that the firm failed to demonstrate that these outlets would be adversely affected to a significant degree. Accordingly, exception relief was denied.

Welsh Oil Inc., Gary, Ind., BEE-0360, gasohol.

Welsh Oil, Inc. filed an Application for Exception in which it sought an increase in its base period allocation of unleaded motor gasoline for the express purpose of enabling the firm to produce and market gasohol. In a March 7, 1980 Proposed Decision and Order, the DOE tentatively concluded that the firm had satisfied the criteria specified in *American Agri-Fuels Corp.*, 4 DOE ¶ 81,139 (1979), and proposed exception relief of 450,000 gallons of unleaded motor gasoline per month to be supplied by the Phillips Petroleum Company, Welsh's base period supplier. Phillips filed a Statement of Objections to the Proposed Decision in which it contended that the assignment of additional unleaded motor gasoline to Welsh was contrary to the policy objectives of the Emergency Petroleum Allocation Act of 1973, specifically, the promotion of energy conservation and the equitable distribution of refined petroleum products among all regions of the United States. The DOE found that the approval of exception relief would actually promote conservation of petroleum products and that Phillips had failed to show that exception relief for Welsh would create a regional imbalance in the supply of unleaded motor gasoline. The DOE also found that Welsh's proposed exception relief should be reduced to reflect the firm's actual operations. Consequently, exception relief which provided Welsh with an additional 150,000 gallons of unleaded motor gasoline per month to be supplied by Phillips during the period July 1980 through June 1981 was granted.

Western Oil of Nebraska, Inc., Grand Island, Nebr., BEO-0982, motor gasoline.

Western Oil of Nebraska, Inc. filed an Application for Exception from the provisions of 10 CFR, Part 211, in which the firm sought an increase base period allocation of motor gasoline. In considering the request, the DOE found that exception relief was necessary to alleviate a gross inequity which the firm was experiencing as a result of the operation of DOE mandatory petroleum allocation regulations. Accordingly, exception relief was granted. An important issue discussed in the Decision and Order is the division of a firm's base period allocation of motor gasoline when portions of that firm are purchased by two separate and discrete entities.

Request for Temporary Exception

National Oil Jobbers Council, Washington, D.C., BEL-0052, Gasohol.

National Oil Jobbers Council filed an Application for Temporary Exception in which it requests temporary exception from the DOE pricing regulations for purposes of determining the product cost of gasohol (10 CFR § 212.92). In considering the Application, the DOE determined that marketers which blend gasohol may include the cost of the ethanol portion of the gasohol in determining their maximum allowable selling prices for gasohol. The exception request was therefore granted.

Requests for Stay

Little America Refining Co., Inc., Washington, D.C., BES-1064, Crude Oil.

Little America Refining Company, Inc., filed an Application for Stay from the requirement that it purchase entitlements in June 1980 as a result of the issuance of the April Entitlements Notice. (10 CFR § 211.67). In considering the Application, the DOE determined that Little America had met the requirements necessary for approval of the stay. The stay request was therefore granted.

Panasonic Co., Secaucus, N.J., BES-0077, Test Procedures.

Panasonic Company filed an Application for Stay from the requirement that it perform energy efficiency and consumption tests on its small-capacity refrigerators, Model No. NR-202 in accordance with the provisions of 10 CFR, Part 430. In considering the application, the DOE found that Panasonic was unable to perform the tests in the manner specified in Part 430. Accordingly, stay relief was granted which permits Panasonic to modify the test procedures applicable to its small-capacity refrigerators.

Supplemental Order

McDowell Exxon, Art's Chevron, Richard Thompson Chevron, Tom's Union, Hal Abel Chevron, John de Laveaga's Chevron, Britton Chevron, Marina Chevron, Ralph Mitchell's Hilltop Chevron, Smith's Chevron, BRX-0064, Motor Gasoline.

On June 4, 1980 and June 9, 1980, Notices of Objection to Proposed Remedial Orders were filed on behalf of certain retailers of motor gasoline. Counsel for those retailers requested that the objection proceedings be consolidated with the proceedings already consolidated in *Weber's Chevron Service*, 5 DOE ¶ , BRS-0058 (June 6, 1980). For the reasons set forth in that decision, the request was granted.

Interim Order

Diamond Shamrock Corp., Amarillo, Tex., BEN-0774, Gasohol.

Diamond Shamrock Corporation filed an Application for Exception from the provisions of 10 CFR Parts 211 and 212. The firm requested that it be allowed to market gasohol as a separate category and grade of motor gasoline for the purposes of Part 212 and that it be allowed to exclude the alcohol portion of the gasohol which it markets from the calculation of its allocable supply of motor gasoline under Part 211. The DOE determined that the relief should be granted.

Petitions Involving the Motor Gasoline Allocation Regulations

The following firms filed Applications for Exception, Temporary Exception, Stay, and/or Temporary Stay from the provisions of the Motor Gasoline Allocation Regulations. The requests, if granted, would result in an increase in the firms' base period allocation of motor gasoline. The DOE issued Decisions and Orders which determined that the requests be denied.

Company Name, Case No., and Location

Hadley Car Wash, DEE-6225, Whittier, CA.
James P. Burns, DEE-3641, Virginia Beach, VA.
Murrayair Ltd, BEO-0414, Hilo, HI.
Rainbow Standard SVC., BEO-0524, Kansas City, KS.
Tiny's Freeway Sta., BEO-0770, Tulsa, OK.
Valley West Amoco, Inc., BEO-0671, West Des Moines, IA.

Dismissals

The following submissions were dismissed without prejudice to refiling at a later date:

Name, and Case No.

Bearsch's Penn Jersey Auto Store & Car Care Center, DES-5447; DST-5447.
Bonnie McKay, DEE-6433.
Cibro Pet. Products, Inc., BEE-1036.
Dean-O of Georgia, Inc., DEE-6295.
Dunlap-Swain, DEE-5236.
Energy Cooperative, Inc., BSG-0025.
Gary Energy Corp., BEA-0343.
Gasamat Oil Corp. of Colorado, BEE-1048.
Gulf Energy Ref. Corp., BEA-0060; BEA-0061.
Heine Petroleum, Inc., BEE-0981.
IGC Vista Petroleums, Inc., BED-0059; BEE-0638.
J. C. Brown Oil Co., Inc., DEE-7392.
Kansas City-East Union Auto/Truck Stop, DEE-3622.
Metro Oil Co., Inc., DES-3257; DST-3257.
Oak Manor Standard, DEE-6853.
Par Mar Oil Co., BSG-0010.
Petro-Pantry, DEE-2377; DES-2377; DST-2377.
Richard Partridge, DEE-6772.
Richards Oil Co., BEE-1157.
Richmond—Kill Svc. Cntr., DEE-7946.
School Board of Seminole County, BEE-1163.
T. F. Barry Oil Svc., BEE-1000
Thorton Oil Corp., DES-2140.
Tweedel & Van Buren Oil Co., BEE-0998.
Van's Exxon, BEE-0079.
Vinny's Svc. Sta., DEE-7947.
Yucaipa Car Wash and Automotive, DEE-4910.

Copies of the full text of these decisions and orders are available in the Public Docket Room of the Office of Hearings and Appeals, Room B-120, 2000 M Street, NW., Washington, D.C. 20461, Monday through Friday, between the hours of 1:00 p.m. and 5:00 p.m., except federal holidays. They are also available in *Energy Management: Federal Energy Guidelines*, a commercially published loose leaf report system.

Dated: August 7, 1980.

Thomas L. Wieker,

Deputy Director, Office of Hearings and Appeals.

[FR Doc. 24686 Filed 8-14-80; 8:45 am]

BILLING CODE 6450-01-M

ENVIRONMENTAL PROTECTION AGENCY

[FRL 1570-8]

Consumer Affairs Program in Compliance With Executive Order 12160, "Providing for Enhancement and Coordination of Federal Consumer Programs"

AGENCY: Envionmental Protection Agency.

ACTION: Feasibility study to consider automating complaint handling.

SUMMARY: To carry out the requirement for effective response to complaints that is included in Executive Order 12160, the Administrator's Special Assistant for Consumer Affairs has asked EPA's Management Information Data Systems Division to study the advisability of automating consumer complaint handling. The purpose of the study is to determine whether and in what manner data to a central computer for later review by the Agency's management and the public, for consideration in making policy and setting priorities. On June 9, 1980, in the final notice of adoption of a Consumer Affairs Program, EPA announced that by August 15, 1980, new procedures would be proposed for processing complaints. A more detailed notice of such a proposal is now under Agency review and will be published with a request for comments in the near future.

FOR FURTHER INFORMATION CONTACT: Rhea L. Cohen, Consumer Affairs Coordinator, Office of Public Awareness (A-107), Environmental Protection Agency, Washington, D.C., 20460. Telephone (202) 755-0700.

Charles Rogers,

Acting Director, Office of Public Awareness.

[FR Doc. 80-24576 Filed 8-14-80; 8:45 am]

BILLING CODE 6560-01-M

[FRL 1571-5; OPTS-51104]

Certain Chemicals; Premanufacture Notices

AGENCY: Environmental Protection Agency (EPA).

ACTION: Notice.

SUMMARY: Section 5(a)(1) of the Toxic Substances Control Act (TSCA) requires any person who intends to manufacture or import a new chemical substance to submit a premanufacture notice (PMN) to EPA at least 90 days before manufacture or import commences. Section 5(d)(2) requires EPA to publish in the Federal Register certain information about each PMN within 5 working days after receipt. This Notice announces receipt of two PMN's and provides a summary of each.

DATES: Written comments by: PMN 80-73—Septmeber 13, 1980; PMN 80-175—September 16, 1980.

ADDRESS: Written comments to: Document Control Officer (TS-793), Office of Pesticides and Toxic Substances, Environmental Protection Agency, 401 M St. SW., Washington, DC 20460, 202-775-8050.

FOR FURTHER INFORMATION CONTACT: Rick Green, Premanufacturing Review Division (TS-794), Office of Pesticides and Toxic Substances, Environmental Protection Agency, 401 M St. SW., Washington, DC 20460, 202/426-2601.

SUPPLEMENTARY INFORMATION: Section 5(a)(1) of TSCA [90 Stat. 2012 (15 U.S.C. 2604)], requires any person who intends to manufacture or import a new chemical substance to submit a PMN to EPA at leaset 90 days before manufacture or import commences. A "new" chemical substance is any substance that is not on the Inventory of existing substances compiled by EPA under Section 8(b) of TSCA. EPA first published the Initial Inventory on June 1, 1979. Notice of availability of the Initial Inventory was published in the Federal Register of May 15, 1979 (44 FR 28558). The requirement to submit a PMN for new chemical substances manufactured or imported for commercial purposes became effective on July 1, 1979.

EPA has proposed premanufacture notification rules and forms in the Federal Register issues of January 10, 1979 (44 FR 2242) and October 16, 1979 (44 FR 59764). These regulations, however, are not yet in effect. Interested persons should consult the Agency's Interim Policy published in the Federal Register of May 15, 1979 (44 FR 28564) for guidance concerning premanufacture notification requirements prior to the effective date of these rules and forms.

In particular, see page 28567 of the Interim Policy.

A PMN must include the information listed in Section 5(d)(1) of TSCA. Under section 5(d)(2) EPA must publish in the Federal Register nonconfidential information on the identity and use(s) of the substance, as well as a description of any test data submitted under section 5(b). In adition, EPA has decided to publish a description of any test data submitted with the PMN and EPA will publish the identity of the submitter unless this information is claimed confidential.

Publication of the section 5(d)(2) notice is subject to section 14 concerning disclosure of confidential information. A company can claim confidentiality for any information submitted as part of a PMN. If the company claims confidentiality for the specific chemical identity or use(s) of the chemical, EPA encourages the submitter to provide a generic use description, a nonconformity description of the potential exposures from use, and a generic name for the chemical. EPA will publish the generic name, the generic use(s), and the potential exposure descriptions in the Federal Register.

If no generic use description or generic name is provided, EPA will develop one and after providing due noice to the submitter, will publish an amended Federal Register notice. EPA immediately will reivew confidentiality claims for chemical identity, use, the identity of the submitter, and for health and safety studies. If EPA determines that portions of this information are not entitled to confidential treatment, the Agency will publish an amended notice and will place the information in the public file, after notifying the submitter and complying with other applicable procedures.

After receipt, EPA has 90 days to review a PMN under section 5(a)(1). The section 5(d)(2) Federal Register notice indicates the date when the review period ends for each PMN. Under section 5(c), EPA may, for good cause, extend the review period for up to an additional 90 days. If EPA determines that an extension is necessary, it will publish a notice in the Federal Register.

Once the review period ends, the submitter may manufacture the substance unless EPA has imposed restrictions. When the submitter begins to manufacture the substance, he must report to EPA, and the Agency will add the substance to the Inventory. After the substance is added to the Inventory, any company may manufacture it without providing EPA notice under section 5(a)(1)(A).

Therefore, under the Toxic Substances Control Act, summaries of the data taken from the PMN's are published herein.

Interested persons may, on or before the dates shown under "DATES", submit to the Document Control Officer TS-793), Rm. E-447, Office of Pesticides and Toxic Substances, 401 M St., SW, Washington, DC 20460, written comments regarding these notices. Three copies of all comments shall be submitted, except that individuals may submit single copies of comments. The comments are to be identified with the document control number "[OPTS-51104]" and the specific PMN number. Comments received may be seen in the above office between 8:00 a.m. and 4:00 p.m., Monday through Friday, excluding holidays.

(Sec. 5, 90 Stat. 2012 (15 U.S.C. 2604))

Dated: August 8, 1980.

Douglas G. Bannerman,

Acting Deputy Assistant Administrator for Chemical Control.

PMN 80-173.

Close of Review Period. October 13, 1980.

Manufacturer's Identity. Claimed confidential. Generic information provided: Manufacturing site—East-North central region, U.S. Standard Industrial Classification Code—285.

Specific Chemical Identity. Claimed confidential. Generic name provided: Polyester of: Adipic acid, phthalic anhydride, trimethylol propane, ethylene glycol, and diethylene glycol.

The following summary is taken from data submitted by the manufacturer in the PMN.

Use. Claimed confidential. The substance will be used in an open use that will release less than 50 kilograms (kg) of the substance to the environment per year. The use may involve potential exposure to skin and eyes.

Production Estimates.

	Kilograms per year	
	Minimum	Maximum
1st year	50,000	50,000
2nd year	50,000	150,000
3d year	100,000	300,000

Physical/Chemical Properties.

	Polymer solution	Dried polymer
Solid content	68.4 pct	
Density	1.10 g/ml	1.30 g/ml.
Solubility in water		0.01 g/100ml.
Number average molecular weight.	3300 to 3400	
Weight average molecular weight.	8500 to 8700	
Flash point (closed cup).	0 °F	Over 212 °F.
Hydroxyl value	26 mg KOH/g	
Acid number	3.9 mg KOH/g	
Viscosity	250 to 350 cps	
Elemental analysis		
		Percent C=59.76.
		Percent H=7.06.
		Percent O=33.18.
Chemical oxygen demand.	1,830,000 HgO_2/g.	

Toxicity of Raw Materials.

Phthalic anhydride. The oral LD_{50} in rats is 800-1,600 mg/kg. The Threshhold Limit Value (TLV) is less than 25 mg/m^3. Phthalic anhydride is a potent skin, eyes, and upper respiratory irritant and can cause skin and possibly pulmonary sensitization.

Ethylene glycol. Low in acute oral toxicity. The LD_{50} in rats is 5.50 ml/kg.

Diethylene glycol. The single dose oral LD_{50} for rats is 14.8 ml/kg. It is not irritating to the eyes or skin, and it is not readily absorbed through the skin.

Adipic acid. Slightly toxic on acute or chronic exposures in rabbits and rats.

Trimethylol propane. Essentially non-toxic and is neither a primary skin irritant nor skin sensitizer. The oral LD_{50} in rats is 14.7 g/kg (non-toxic), the dermal LD_{50} in rabbits is over 10 g/kg (non-toxic).

Ethyl acetate. The TLV for ethyl acetate is 400 ppm. Over exposure may cause severe irritation to eyes with moderate irritation to the skin. The oral LD_{50} in rats is 5.6 g/kg.

Acetone. The toxicity by ingestion of acetone for animals is low. The lethal and narcotic doses for rabbits is 10 and 7 ml/kg, respectively. The TLV is 1,000 ppm.

Occupational exposure

Activity	Exposure route	Maximum exposed	Maximum duration		Concentration ppm	
			Hours/day	Days/year	Average	Peak
Manufacture	Inhalation and dermal.	8	24	72	0-1	1-10

Environmental Release/Disposal. The manufacturer states that the substance will release less than 50 kg of the substance to the environment per year. Each reactor at the manufacturing plant is equipped with an exhaust and fume condenser. The effluent (air borne) is also treated by an exhaust fume scrubber. Scrubber water goes to biological treatment lagoons with a sixty-day retention period. Sludge is transported by state licensed carriers to a state licensed landfill.

PMN 80-175.

Close of Review Period. October 16, 1980.

Manufacturer's Identity. McCloskey Varnish Co. of the West, 5501 E. Slauson, Los Angeles, CA 90040. (Parent Co.: McCloskey Varnish Co., Philadelphia, PA 19136)

Specific Chemical identity. Alkyd resin polymer, fatty acid, and urethane modified.

The following summary is taken from data submitted by the manufacturer in the PMN.

Use. Industrial enamels (80%) and industrial primers (20%).

Production Estimates. The manufacturer estimates that between 8,000 to 40,000 kg of the PMN substance will be produced during the first year.

Physical/Chemical Properties.

Solids—74 to 76 pct.
Viscosity—Z4 to Z6.
Acid values (solids)—45 to 53.
Color—10 maximum.
Weight/gal.—8.7 to 8.8 lb.

Toxicity Data. None submitted.

Occupational Exposure. The submitter states that 4 persons may be exposed to the substance, 3 hours per day, 4 to 20 days a year during the manufacturing process.

Environmental Release. The submitter claims that less than 10 kilograms of the substance per year will be released to the environment.

[FR Doc. 80-24705 Filed 8-14-80; 8:45 am]
BILLING CODE 6560-01-M

[FRL 1571-6; OPTS-51109]

Certain Chemicals; Premanufacture Notices

AGENCY: Environmental Protection Agency (EPA).

ACTION: Notice.

SUMMARY: Section 5(a)(1) of the Toxic Substances Control Act (TSCA) requires any person who intends to manufacture or import a new chemical substance to submit a premanufacture notice (PMN) to EPA at least 90 days before manufacture or import commences. Section 5(d)(2) requires EPA to publish in the Federal Register certain information about each PMN within 5 working days after receipt. This Notice announces receipt of three PMN's and provides a summary of each.

DATES: Written comments by: PMN 80-171—September 14, 1980; PMN 80-176—September 19, 1980; PMN 80-177—September 19, 1980.

ADDRESS: Written comments to: Document Control Officer (TS-793), Office of Pesticides and Toxic substances, Environmental Protection Agency, 401 M St. SW., Washington, DC 20460, 202-755-8050.

FOR FURTHER INFORMATION CONTACT: Kirk Maconaughey, Premanufacturing Review Division (TS-794), Office of Pesticides and Toxic Substances, Environmental Protection Agency, 401 M St. SW., Washington, DC 20460, 202-426-3936.

SUPPLEMENTARY INFORMATION: Section 5(a)(1) of TSCA [90 Stat. 2012 (15 U.S.C. 2604)], requires any person who intends to manufacture or import a new chemical substance to submit a PMN to EPA at least 90 days before manufacture or import commences. A "new" chemical substance is any substance that is not on the Inventory of existing substances compiled by EPA under Section 8(b) of TSCA. EPA first published the Initial Inventory on June 1, 1979. Notice of availability of the Initial Inventory was published in the Federal Register of May 15, 1979 (44 FR 28558). The requirement to submit a PMN for new chemical substances manufactured or imported for commercial purposes became effective on July 1, 1979.

EPA has proposed premanufacture notification rules and forms in the Federal Register issues of January 10, 1979 (44 FR 2242) and October 16, 1979 (44 FR 59764). These regulations, however, are not yet in effect. Interested persons should consult the Agency's Interim Policy published in the Federal Register of May 15, 1979 (44 FR 28564) for guidance concerning premanufacture notification requirements prior to the effective date of these rules and forms. In particular, see page 28567 of the Interim Policy.

A PMN must include the information listed in Section 5(d)(1) of TSCA. Under section 5(d)(2) EPA must publish in the Federal Register nonconfidential information on the identity and use(s) of the substance, as well as a description of any test data submitted under section 5(b). In addition, EPA has decided to publish a description of any test data submitted with the PMN and EPA will publish the identity of the submitter unless this information is claimed confidential.

Publication of the section 5(d)(2) notice is subject to section 14 concerning disclosure of confidential information. A company can claim confidentially for any information submitted as part of a PMN. If the company claims confidentiality for the specific chemical identity or use(s) of the chemical, EPA encourages the submitter to provide a generic use description, a nonconfidential description of the potential exposures from use, and a generic name for the chemical. EPA will publish the generic name, the generic use(s), and the potential exposure descriptions in the Federal Register.

If no generic use description or generic name is provided, EPA will develop one and after providing due notice to the submitter, will publish an amended Federal Register notice. EPA immediately will review confidentiality claims for chemical identity, chemical use, the identity of the submitter, and for health and safety studies. If EPA determines that portions of this information are not entitled to confidential treatment, the Agency will publish an amended notice and will place the information in the public file, after notifying the submitter and complying with other applicable procedures.

After receipt, EPA has 90 days to review a PMN under section 5(a)(1). The section 5(d)(2) Federal Register notice indicates the date when the review period ends for each PMN. Under section 5(c), EPA may, for good cause, extend the review period for up to an additional 90 days. If EPA determines that an extension is necessary, it will publish a notice in the Federal Register.

Once the review period ends, the submitter may manufacture the substance unless EPA has imposed restrictions. When the submitter begins to manufacture the substance, he must report to EPA, and the Agency will add the substance to the Inventory. After the substance is added to the Inventory, any company may manufacture it without providing EPA notice under section 5(a)(1)(A).

Therefore, under the Toxic substances Control Act, summaries of the data taken from the PMN's are published herein.

Interested persons may, on or before the dates shown under "DATES",

submit to the Document Control Officer (TS-793), Rm. E-447, Office of Pesticides and Toxic Substances, 401 M St., SW, Washington, DC 20460, written comments regarding these notices. Three copies of all comments shall be submitted, except that individuals may submit single copies of comments. The comments are to be identified with the document control number "[OPTS-51109]" and the specific PMN number. Comments received may be seen in the above office between 8:00 a.m. and 4:00 p.m., Monday through Friday, excluding holidays.

(Sec. 5, 90 Stat. 2012 (15 U.S.C. 2604))

Dated: August 11, 1980.

Douglas G. Bannerman,

Acting Deputy Assistant Administrator for Chemical Control.

PMN 80-171.

Close of Review Period. October 14, 1980.

Manufacturer's Identity. Union Camp Corp., Chemical Div., P.O. Box 2668, Savannah, GA 31402.

Specific Chemical Identity. Claimed confidental. Generic name provided: Polyester of adipic and phthalic anhydride, propanediol 1,2 an alkylene diol, and octyl alcohol.

The following summary is taken from data submitted by the manufacturer in the PMN.

Use. PVC plasticizer.

Production Estimates. Claimed confidental.

Physical/Chemical Properties.

Specific gravity 25°C/25°C—1.03 to 1.04.
Viscosity, Cts at 25°C—200 to 900.
Flash Point, °F (COC)—>400.
Color, Gardner—2+ to 4.
Acid Value—3 maximum.
Saponification value—394 minimum.
Hydroxyl value—35 maximum.
Estimated molecular weight—600-1,000.
Solubility in water—Negligible.

Toxicity Data. The manufacturer claims that esters generally have low toxicity. No other data submitted.

Occupational exposure.

Activity	Exposure route	Maximum exposed	Maximum duration		Concentration (ppm)	
			Hours/day	Days/year	Average	Peak
Manufacture	Dermal	6	2	12	0-1	mg/m³

Environmental Release/Disposal. Manufacture:

Media—Amount/duration of chemical released (lb/yr).

Air—Less than 10. 24 hours/day; 6 days/year.

Water—100 to 1,000.

Land—Less than 10. 12 hours/day; 6 days/year.

Diatamaceous earth saturated with the product will be disposed of according to Resources Conservation Recovery Act (RCRA) regulations. The water of reaction is sent to the water treatment system before being discharged to the receiving stream. The treatment system meets the requirements of the State of Ohio and consist of oil separator followed by oxidation and activated sludge decomposition of the organics.

PMN 80-176.

Close of Review Period. October 19, 1980.

Manufacturer's Identity. Claimed confidential. Generic information provided: Annual sales—$100,000,000-$499,000,000. Manufacturing site—Middle Atlantic region, U.S. Standard Industrial Classification Code—2891.

Specific Chemical Identity. Oxirane, polymer with methyl oxirane, 1,1'-methylenebis(4-isocyanatocyclohexane) and (2-hydroxyethyl)-2-propenoate.

The following summary is taken from data submitted by the manufacturer in the PMN.

Use. Coating.

Production Estimates. Between 2,000-3,000 kilograms for first three years.

Physical/Chemical Properties.

Viscosity—800 cps (1800 mPa.s).
Flash point (set a flash)—80° F.
Weight/gal—9.1 lb. (1.09kg/l).

Toxicity Date. None submitted.

Exposure. The manufacturer claims that during manufacture, one to two workers would be exposed to potential dermal contact for 4 hour per day, 5 days/year. This would occur during blending and packaging.

Environmental Release. The submitter states that the substance will be used in radiation curable 100% reactive coating formulations. The coating will be applied via automatic dispensing equipment, such as a roll coater or a curtain coater, on a moving web. The coated part then immediately moves into a curing unit, after which the substance is part of a completely crosslinked matrix.

PMN 80-177.

Close of Review Period. October 19, 1980.

Manufacturer's Identity. Claimed confidential. Generic information provided: Annual sales—$100,000,000-$499,000,000. Manufacturing Site—Middle Atlantic region, U.S. Standard Industrial Classification Code—2891.

Specific Chemical Identity. Oxirane, polymer with methyl oxirane, 1,3-diisocyanatomethylbenzene, and (2-hydroxyethyl)-2-propenoate.

The following summary is taken from data submitted by the manufacturer in the PMN.

Use. Coating formulations.

Production Estimates. The submitter estimates that between 3,000 and 6,000 kilograms per year will be manufactured for the first three years.

Physical/Chemical Properties.

Color—Clear.
Percent solids by weight—100 percent.
Weight by gallon—8.9-9.1.
Viscosity—300-500 cps Brookfield RVT. Spindle #2 at 50 rpm.
Cure speed—1 pass 150 ft/min/1-300 watt lamp.
Flash point—>184° F.

Toxicity Data. None submitted.

Exposure. Exposure to the PMN substance in liquid form may occur during blending and packaging in which 1-2 workers may have dermal contact for 4 hours per day, 5 days per year.

Environmental Release. During use. The manufacturer states that the substance will be used in radiation curable 100% reactive coating formulations. The coating will be applied via automatic dispensing equipment, such as a roll coater or a curtain coater, on a moving web. The coated part then immediately moves into a curing unit, after which the substance is part of a completely crosslinked matrix.

[FR Doc. 80-24706 Filed 8-14-80; 8:45 am]
BILLING CODE 6560-01-M

[FRL 1572-4; OPTS-51110]

Certain Chemicals; Premanufacture Notices

AGENCY: Environmental Protection Agency (EPA).

ACTION: Notice.

SUMMARY: Section 5(a)(1) of the Toxic Substances Control Act (TSCA) requires any person who intends to manufacture or import a new chemical substance to submit a premanufacture notice (PMN) to EPA at least 90 days before manufacture or import commences. Section 5(d)(2) requires EPA to publish in the Federal Register certain information about each PMN within 5 working days after receipt. This Notice

announces receipt of two PMN's and provides a summary of each.

DATES: Written comments by: PMN 80-170—September 14, 1980; PMN 80-181—September 19, 1980.

ADDRESS: Written comments to: Document Control Officer (TS-793), Office of Pesticides and Toxic Substances, Environmental Protection Agency, 401 M St. SW, Washington, DC 20460, 202-755-8050.

FOR FURTHER INFORMATION CONTACT: Carolyn Brown, Premanufacturing Review Division (TS-794), Office of Pesticides and Toxic Substances, Environmental Protection Agency, 401 M St. SW, Washington, DC 20460, 202-426-3980.

SUPPLEMENTARY INFORMATION: Section 5(a)(1) of TSCA [90 Stat. 2012 (15 U.S.C. 2604)], requires any person who intends to manufacture or import a new chemical substance to submit a PMN to EPA at least 90 days before manufacture or import commences. A "new" chemical substance is any substance that is not on the Inventory of existing substances compiled by EPA under Section 8(b) of TSCA. EPA first published the Initial Inventory on June 1, 1979. Notice of availability of the Initial Inventory was published in the Federal Register of May 15, 1979 (44 FR 28558). The requirement to submit a PMN for new chemical substances manufactured or imported for commercial purposes became effective on July 1, 1979.

EPA has proposed premanufacture notification rules and forms in the Federal Register issues of January 10, 1979 (44 FR 2242) and October 16, 1979 (44 FR 59764). These regulations, however, are not yet in effect. Interested persons should consult the Agency's Interim Policy published in the Federal Register of May 15, 1979 (44 FR 28564) for guidance concerning premanufacture notification requirements prior to the effective date of these rules and forms. In particular, see page 28567 of the Interim Policy.

A PMN must include the information listed in Section 5(d)(1) of TSCA. Under section 5(d)(2) EPA must publish in the Federal Register nonconfidential information on the identity and use(s) of the substance, as well as a description of any test data submitted under section 5(b). In addition, EPA has decided to publish a description of any test data submitted with the PMN and EPA will publish the identity of the submitter unless this information is claimed confidential.

Publication of the section 5(d)(2) notice is subject to section 14 concerning disclosure of confidential information. A company can claim confidentiality for any information submitted as part of a PMN. If the company claims confidentiality for the specific chemical identity or use(s) of the chemical, EPA encourages the submitter to provide a generic use description, a nonconfidential description of the potential exposures from use, and a generic name for the chemical. EPA will publish the generic name, the generic use(s), and the potential exposure descriptions in the Federal Register.

If no generic use description or generic name is provided, EPA will develop one and after providing due notice to the submitter, will publish an amended Federal Register notice. EPA immediately will review confidentiality claims for chemical identity, chemical use, the identity of the submitter, and for health and safety studies. If EPA determines that portions of this information are not entitled to confidential treatment, the Agency will publish an amended notice and will place the information in the public file, after notifying the submitter and complying with other applicable procedures.

After receipt, EPA has 90 days to review a PMN under section 5(a)(1). The section 5(d)(2) Federal Register notice indicates the date when the review period ends for each PMN. Under section 5(c), EPA may, for good cause, extend the review period for up to an additional 90 days. If EPA determines that an extension is necessary, it will publish a notice in the Federal Register.

Once the review period ends, the submitter may manufacture the substance unless EPA has imposed restrictions. When the submitter begins to manufacture the substance, he must report to EPA, and the Agency will add the substance to the Inventory. After the substance is added to the Inventory, any company may manufacture it without providing EPA notice under section 5(a)(1)(A).

Therefore, under the Toxic Substances Control Act, summaries of the data taken from the PMN's are published herein.

Interested persons may, on or before the dates shown under "DATES", submit to the Document Control Officer (TS-793), Rm. E-447, Office of Peticides and Toxic Substances, 401 M St., SW, Washington DC 20460, written comments regarding these notices. Three copies of all comments shall be submitted, except that individuals may submit single copies of comments. The comments are to be identified with the document control number "[OPTS-51110]" and the specific PMN number. Comments received may be seen in the above office between 8:00 a.m. and 4:00 p.m., Monday through Friday, excluding holidays.

(Sec. 5, 90 Stat. 2012 (15 U.S.C. 2604))

Dated: August 11, 1980.

Douglas G. Bennerman,

Acting Deputy Assistant Administrator for Chemical Control.

PMN 80-170.

Close of Review Period. October 13, 1980.

Importer's Identity. Akron Chemical Co., 255 Fountain St., Akron, OH 44304.

Specific Chemical Identity; Zinc dibutyl dithiocarbamate dibutylamine complex.

The following summary is taken from data submitted by the manufacturer in the PMN.

Use. Room temperature accelerator in rubber vulcanizing process.

Import Estimates. Importer states volume of import will range between 1,000-10,000 pounds per year.

Physical/Chemical Properties.

Molecular weight—603.4.
Specific gravity—1.088-1.092.
Vapor pressure—Low.
Viscosity—Syrupy liquid.
Evaporation rate—Low.
Flash point—66° C.

Toxicity Data. The importer states that there are no specific data on the toxicity of the complex ZBUDX, but regards the substance to be moderately toxic. Data on related substance: Zinc dibutyl dithiocarbamate (mice)—1,000 mg/kg maximum tolerated oral dose. Dibutylamine, oral LD_{50} (rats)—550 mg/kg.

The importer states that in a single patch test, the complex ZBUDX gave no indication of irritative or dermatitic properties.

Exposure. No data were submitted.

Environmental Release/Disposal. No data were submitted.

PMN 80-181.

Close of Review Period. October 19, 1980.

Importer's Identity. Diamond Shamrock Corp., 1100 Superior Ave., Clevland, OH 44114.

Specific Chemical Identity. Benzenemethanaminium, *ar*-bromoethenyl-*N,N,N*-trimethylchloride (or sulfate), polymer with diethenlybenzene, diisopropenylbenzene, and 2-methyl-1,3-butadiene.

The following summary is taken from data submitted by the manufacturer in the PMN.

Use. Recovery of uranium from uranium mine tailings.

Import Estimates.

	Kilograms per year	
	Minimum	Maximum
1st year	4,000	55,000
2nd year	49,000	65,000
3rd year	96,000	210,000

Physical/Chemical Properties.

Matrix—Crosslinked polystyrene.

Functional groups—$N(CH_3)_3$ (Type 1 quat. ammonium).

Physical form—Red-brown translucent beads.

Sphericity—Minimum 95 percent.

Optical aspect—Minimum 90 percent intact beads.

Specific gravity (H_2O=1)—1.2 Cl^- form; 1.3 SO_4=form.

Particle size—0.30–1.00 mm for fixed bed operation; 0.40–0.80 mm or 0.75–1.00 mm for fluidized bed operation.

Toxicity Data. No data were submitted.

Environmental Release/Exposure. Diamond Shamrock Corp. states that processing or repacking of the PMN substance in the United States will not be required, and therefore occupational exposure to the PMN substance is nil. Further, Diamond Shamrock Corp. state that since uranium mill operations are regulated by the Nuclear Regulatory Commission (NRC) occupational exposure and environmental release are covered by the NRC. (Title 10, CFR, Section 20)

[FR Doc. 80-24707 Filed 8-14-80; 8:45 am]

BILLING CODE 6560-01-M

[FRL 1572-7; OPTS-51111]

Certain Chemicals; Premanufacture Notices

AGENCY: Environmental Protection Agency (EPA).

ACTION: Notice.

SUMMARY: Section 5(a)(1) of the Toxic Substances Control Act (TSCA) requires any person who intends to manufacture or import a new chemical substance to submit a premanufacture notice (PMN) to EPA at least 90 days before manufacture or import commences. Section 5(d)(2) requires EPA to publish in the Federal Register certain information about each PMN within 5 working days after receipt. This Notice announces receipt of two PMN's and provides a summary of each.

DATES: Written comments by: PMN 80-182—September 21, 1980; PMN 80-186—September 28, 1980.

ADDRESS: Written comments to: Document Control Officer (TS-793), Office of Pesticides and Toxic Substances, Environmental Protection Agency, 401 M St. SW., Washington, DC 20460, 202-755-8050.

FOR FURTHER INFORMATION CONTACT: George Bagley, Premanufacturing Review Division (TS-794), Office of Pesticides and Toxic Substances, Environmental Protection Agency, 401 M St. SW., Washington, DC 20460, 202-426-3936.

SUPPLEMENTARY INFORMATION: Section 5(a)(1) of TSCA [90 Stat. 2012 (15 U.S.C. 2604)], requires any person who intends to manufacture or import a new chemical substance to submit a PMN to EPA at least 90 days before manufacture or import commences. A "new" chemical substance is any substance that is not on the Inventory of existing substances compiled by EPA under Section 8(b) of TSCA. EPA first published the Initial Inventory on June 1, 1979. Notice of availability of the Initial Inventory was published in the Federal Register of May 15, 1979 (44 FR 28558). The requirement to submit a PMN for new chemical substances manufactured or imported for commercial purposes became effective on July 1, 1979.

EPA has proposed premanufacture notification rules and forms in the Federal Register issues of January 10, 1979 (44 FR 2242) and October 16, 1979 (44 FR 59764). These regulations, however, are not yet in effect. Interested persons should consult the Agency's Interim Policy published in the Federal Register of May 15, 1979 (44 FR 28564) for guidance concerning premanufacture notification requirements prior to the effective date of these rules and forms. In particular, see page 28567 of the Interim Policy.

A PMN must include the information listed in Section 5(d)(1) of TSCA. Under section 5(d)(2) EPA must publish in the Federal Register nonconfidential information on the identity use(s) of the substance, as well as a description of any test data submitted under section 5(b). In addition, EPA has decided to publish a description of any test data submitted with the PMN and EPA will publish the identity of the submitter unless this information is claimed confidential.

Publication of the section 5(d)(2) notice is subject to section 14 concerning disclosure of confidential information. A company can claim confidentiality for any information submitted as part of a PMN. If the company claims confidentiality for the specific chemical identity or use(s) of the chemical, EPA encourages the submitter to provide a generic use description, a nonconfidential description of the potential exposures from use, and a generic name for the chemical. EPA will publish the generic name, the generic use(s), and the potential exposure descriptions in the Federal Register.

If no generic use description or generic name is provided, EPA will develop one and after providing due notice to the submitter, will publish an amended Federal Register notice. EPA immediately will review confidentiality claims for chemical identity, chemical use, the identity of the submitter, and for health and safety studies. If EPA determines that portions of this information are not entitled to confidential treatment, the Agency will publish an amended notice and will place the information in the public file, after notifying the submitter and complying with other applicable procedures.

After receipt, EPA has 90 days to review a PMN under section 5(a)(1). The section 5(d)(2) Federal Register notice indicates the date when the review period ends for each PMN. Under section 5(c), EPA may, for good cause, extend the review period for up to an additional 90 days. If EPA determines that an extension is necessary, it will publish a notice in the Federal Register.

Once the review period ends, the submitter may manufacture the substance unless EPA has imposed restrictions. When the submitter begins to manufacture the substance, he must report to EPA, and the Agency will add the substance to the Inventory. After the substance is added to the Inventory, any company may manufacture it without providing EPA notice under section 5(a)(1)(A).

Therefore, under the Toxic Substances Control Act, summaries of the data taken from the PMN's are published herein.

Interested persons may, on or before the dates shown under "DATES", submit to the Document Control Officer (TS-793), Rm. E-447, Office of Pesticides and Toxic Substances, 401 M St., SW, Washington, DC 20460, written comments regarding these notices. Three copies of all comments shall be submitted, except that individuals may submit single copies of comments. The comments are to be identified with the document control number "[OPTS-51111]" and the specific PMN number. Comments received may be seen in the above office between 8:00 a.m. and 4:00 p.m., Monday through Friday, excluding holidays.

(Sec. 5, 90 Stat. 2012 (15 U.S.C. 2604).

Dated: August 11, 1980.

Douglas G. Bannerman,

Acting Deputy Assistant Administrator for Chemical Control.

PMN 80-182.

Close of Review Period. October 21, 1980

Manufacturer's Identity. Claimed confidential. Generic information provided:

Annual sales—In excess of $500 million.

Manufacturing site—East-north central region, U.S.

Standard Industrial Classification Code—286 "Industrial Organic Chemicals".

Specific Chemical Identity. Claimed confidential. Generic name provided: Alkanedioic acids mixed alkanolamines salt.

The following summary is taken from data submitted by the manufacturer in the PMN.

Use. Claimed confidential.

Production Estimates. Claimed confidential.

Physical/Chemical Properties. No data were submitted.

Toxicity Data.

Acute oral LD_{50} (rats)—6.81 ml/kg.

Primary skin irritation test (rabbits)—Index=2.42.

Acute eye irritations (rabbits—Nonirritant.

Exposure.

Activity	Exposure route	Maximum exposed	Maximum duration		Concentration (ppm)	
			Hours/day	Days/year	Average	Peak
Manufacture	Vapors/skin	2		5	1-10	1-10
Processing	Vapors/skin	2		60	1-10	1-10
Use	Intended skin contact.	NA		250	>100	

The use will involve exposure to non-chemical industrial workers on a continuous or very frequent exposure during working hours with intended skin contact and a potential for eye contact.

Environmental Release/Disposal. The manufacturer states that the PMN substance will be used in an open use that will release more than 5,000 kilograms (kg), but less that 50,000 kg per year to the environment and that there will be a release to the environment as an industrial waste stream to a publicly owned treatment works (POTW).

PMN 80-186.

Close of Review Period. October 28, 1980. Manufacturer's Identity. Eli Lilly & Co., 307 East McCarty St., Indianapolis, IN 46285.

Specific Chemical Identity. *N*-Methyl-2,4-dinitro-*N*-phenyl-6-(trifluoromethyl) benzeneamine.

The following summary is taken from data submitted by the manufacturer in the PMN.

Use. Captive intermediate.

Production Estimates. Claimed confidential.

Physical/Chemical Properties.

Melting point—84.0-85.5° C.

Solubilities:

Acetone—lg/ml.

Dimethylsulfoxide—0.5 g/ml.

Ethanol—0.05 g/ml.

Toxicity Data.

Oral toxicity, LD_{50} (rats)—>500 mg/kg.

Dermal toxicity, LD_{50} (rabbits)—>500 mg/kg.

Dermal irritation (rabbit)—Slight.

Eye irritation (rabbit)—Slight.

Inhalation toxicity, LD_{50} (rat)—>0.14 mg/L actual.

Exposure. The manufacturer states that two people will be involved in the manufacturing process of the PMN substance and that exposure to the substance will be negligible.

Environmental Release/Disposal. Release to the environment of the PMN substance will be incidental; disposal will be by incineration.

[FR Doc. 80-24704 Filed 8-14-80; 8:45 am]

BILLING CODE 6560-01-M

[FRL 1572-6; PF-198]

Certain Pesticide Chemicals; Notice of Filing of Food Additive and Pesticide Petitions

AGENCY: Environmental Protection Agency (EPA)

ACTION: Notice.

SUMMARY: This notice announces that certain companies have filed requests with the EPA to establish tolerances for residues of pesticide chemicals on raw agricultural commodities and food.

ADDRESS: Written comments and inquiries should be directed to the: Designated Product Manager (PM), Registration Division (TS-767), Office of Pesticide Programs, Environmental Protection Agency, 401 M Street SW., Washington, D.C. 20460.

Written comments may be submitted while a petition is pending before the Agency. The comments are to be identified by the document control number "[PF-198]" and the specific petition number. All written comments filed pursuant to this notice will be available for public inspection in the Product Manager's office from 8:00 a.m. to 4:00 p.m. Monday through Friday, excluding holidays.

SUPPLEMENTARY INFORMATION: EPA gives notice that the following pesticide petitions have been submitted to the Agency to establish tolerances for residues of certain pesticide chemicals on certain raw agricultural commodities and food in accordance with the Federal Food, Drug, and Cosmetic Act. The analytical method for determining residues, where required, is given in each specific petition.

PP OF2368. Pennwalt Corp., Decco-Tiltbelt Div., P.O. Box 120, Monrovia, CA 91016. Proposes that 40 CFR 180.200 be amended by establishing a tolerance for the residues of the fungicide 2,6-dichloro-4-nitroaniline in or on the raw agricultural commodity kiwifruit (post-harvest) at 20 parts per million (ppm). The proposed analytical method for determining residues is gas chromatography with an electron capture detector. (PM-21, Eugene Wilson, Rm. E-349, 202-755-1806)

PP OF2369. Pennwalt Corp., Decco-Tiltbelt Div. P.O. Box 120, Monrovia, CA 91016. Proposes that 40 CFR 180.129 be amended by establishing a tolerance for residues of the fungicide *O*-phenylphenol and its sodium salt in or on the raw agricultural commodity kiwifruit (post-harvest) at 20 ppm. The proposed analytical method of determining residues is gas chromatography with a flame ionization detector. (PM-21).

PP OF2385. Mobay Chemical Corp., Agricultural Chemicals Div., 1140 Connecticut Avenue, Suite 604, Washington, D.C. 20036. Proposes to amend 40 CFR 180.349 by establishing tolerances for the combined residues of the nematocide ethyl 3-methyl-4-(methylthio)phenyl (1-methylethyl)phosphoramidate in or on

the raw agricultural commodities: corn, fresh (including sweet) at 0.01 ppm; corn grain (including field and popcorn); at 0.01 ppm; and corn forage and fodder at 0.5 ppm. The proposed analytical method for determining residues is gas liquid chromatography with a thermionic flame ionization detector. (PM-21),

PP OF2375. Shell Oil Co., Suite #200, 1025 Connecticut Avenue, N.W., Washington, D.C. 20036. Proposes that 40 CFR 180.379 be amended by establishing tolerances for the residues of the insecticide cyano (3-phenoxyphenyl)methyl-4-chloro-alpha-(1-methylethyl) benzeneacetate in or on the raw agricultural commodity soybeans at 0.05 ppm. The proposed analytical method for determining residues is by gas chromatography and combined gas chromatography/mass spectroscopy. (PM-17, Franklin D.R. Gee, Rm. E-341, 202-426-9417)

FAP OH5268. Shell Oil Co., proposes that 40 CFR 193 be amended by establishing a regulation permitting residues of the insecticide cyano in or on the commodity soybean hulls at 0.1 ppm. (PM-17)

(Secs. 408(d)(1), 209(b)(5); 68 Stat. 512, 72 Stat. 1786;) (7 U.S.C. 135), (21 U.S.C. 348))

Dated: August 8, 1980.

Douglas D. Campt,

Director Registration Division Office of Pesticide Programs.

[FR Doc. 80-24710 Filed 8-14-80; 8:45 am]

BILLING CODE 6560-01-M

[OPP-50496; FRL 1572-5]

Issuance of Experimental Use Permits

The Environmental Protection Agency (EPA) has issued experimental use permits to the following applicants. Such permits are in accordance with, and subject to, the provisions of 40 CFR Part 172, which defines EPA procedures with respect to the use of pesticides for experimental purposes.

3125-EUP-165. This experimental use permit allows the use of 162.5 pounds of the fungicide 1-(4-chlorophenoxy)-3,3-dimethyl-1-(1*H*-1,2,4-triazol-1-yl)-2-butanone and its metabolite, beta-4(chlorophenoxy)-alpha-(1,1-dimethylethyl)-1*H*-1,2,4-triazol-1-ethanol on fresh grapes to control powdery mildrew and black rot. A total of 290 acres are involved. The program is authorized only in the States of California, New York, Oregon, and Washington. The experimental use program is effective from July 16, 1980 to December 31, 1982. A temporary tolerance for the residues of the fungicide has been established.

3125-EUP-169. This experimental use permit allows the use of 185 pounds of the above named fungicide on fresh apples to control powdery mildrew and cedar apple rust. A total of 185 acres are involved. The program is authorized in the States of California, Colorado, Oregon, Pennsylvania, Utah, Virginia, Washington, and West Virginia. The program is effective from July 18, 1980 to December 31, 1982. A temporary tolerance for the residues of the fungicide on apples has been established. This permit and the one above have been issued to Mobay Chemical Corporation, Agriculture Chemicals Division, P.O. Box 4913, Kansas City, Mo 64120. (PM 21, Eugene Wilson, Rm. E-349, 202/755-1806).

Persons wishing to review the experimental use permits are referred to the designated Product Manager (PM), Registration Division (TS-767), Office of Pesticide Programs, EPA, 401 M St. SW, Washington, D.C. 20460. Inquiries regarding these permits should be directed to the contact person given above. It is suggested that interested persons call before visiting the EPA Headquarters Office so that the appropriate file may be made available for inspection from 8:00 a.m. to 4:00 p.m. Monday through Friday, excluding holidays.

(Sec. 5, 92 Stat. 189 as amended, (7 U.S.C. 136))

Dated: August 8, 1980.

Douglas D. Campt,

Director, Registration Division, Office of Pesticide Programs.

[FR Doc. 80-24711 Filed 8-14-80; 8:45 am]

BILLING CODE 6560-01-M

[OPP-50493; FRL 1572-2]

Issuance of Experimental Use Permits

The Environmental Protection Agency (EPA) has issued experimental use permits to the following applicants. Such permits are in accordance with, and subject to, the provisions of 40 CFR Part 172, which defines EPA procedures with respect to the use of pesticides for experimental purposes.

11683-EUP-2. This experimental use permit allows the use of 11,160 pounds of the herbicide dimethylamine salt of 2,4-dichlorophenoxyacetic acid in or on lakes and reservoirs under the jurisdiction of the Water and Power Resources Service, U.S. Department of Interior and the U.S. Army Corps of Engineers to evaluate control of Eurasian watermilfoil.

11683-EUP-3. This experimental use permit allows the use of 13,485 pounds of herbicide 2,4-dichlorophenoxyacetic acid, butoxyethanol ester in or on lakes and reservoirs under the jurisdiction of the Water and Power Resources Service, U.S. Department of Interior and the U.S. Army Corps of Engineers, to evaluate control of the Eurasian watermilfoil.

This program and the one above are both authorized only in the following locations: Lake Seminole, Florida-Georgia; Robert S. Kerr Reservoir, Oklahoma; Fort Cobb Reservoir, Oklahoma, and Banks Lake, Washington.

Both programs are effective from July 10, 1980 to Feburary 28, 1982. A temporary tolerance and a food additive tolerance for residues of the active ingredient in or on the raw agricultural commodities fish (edible flesh) and various crops and crop groupings have been established under the provisions of the Federal Food, Drug, and Cosmetic Act. A food additive tolerance for residues of the active ingredient in potable water in connection with these experimental use permits has been established under the Federal Food, Drug, and Cosmetic Act. (PM 23, Richard F. Mountfort, Rm. E-351, 202/755-1397).

8730-EUP-10. Herculite Products, Inc., 1107 Broadway, New York, NY 10010. This experimental use permit allows the use of 0.705 pounds of insecticide (*Z,Z*)-3-,13-octadecadien-1-ol acetate on peach trees to evaluate control of the peachtree borer. A total of 300 acres are invovled. The program is authorized only in the State of Georgia. The experimental use permit is effective from June 7, 1980 to June 7, 1981. A temporary exemption from the requirements a of tolerance for residues of (*Z,Z*)-3-,13-octadecadien-1-o1 acetate on peaches has been established. (PM 17, Franklin D. R. Gee, Rm. E-341, 202/426-9417)

Persons wishing to review the experimental use permits are referred to the designated Product Manager (PMN), Registration Division (TS-767), Office of Pesticide Programs, EPA, 401 M Street, SW, Washington, D.C. 20460. Inquiries regarding these permits should be directed to the contact person given above. It is suggested that interested persons call before visiting the EPA Headquarters Office so that the appropriate file may be made available for inspection from 8 a.m. to 4 p.m. Monday through Friday, excluding holidays.

(Sec. 5, 92 Stat. 819 as amended (7 U.S.C. 136))

Dated: August 11, 1980.

Douglas D. Campt,

Director, Registration Division, Office of Pesticide Programs.

[FR Doc. 80-24713 Filed 8-14-80; 8:45 am]

BILLING CODE 6560-01-M

[PF 112A; FRL 1571-8]

Mobay Chemical Corp.; Filing of Pesticide Petition; Amendment

AGENCY: Environmental Protection Agency (EPA).

ACTION: Notice.

SUMMARY: Mobay Chemical Corp. has submitted a request for an amendment to pesticide petition number PP 8F2116. This amendment proposes to increase the tolerance in or on the raw agricultural commodity sugar beet (tops) from "0.4" to "0.5" part per million (ppm), and to establish a tolerance for sugar beet (roots) at 0.02.

ADDRESS: William H. Miller, Product Manager (PM) 16, Registration Division (TS-767), Office of Pesticide Programs, Rm. E-343, Environmental Protection Agency, 401 M St. SW., Washington, DC 20460.

FOR FURTHER INFORMATION CONTACT: William H. Miller (202-426-9458).

SUPPLEMENTARY INFORMATION: A notice was published in the Federal Register of November 2, 1978 (43 FR 51132) that Mobay Chemical Corp., PO Box 4913, Kansas City, MO 64120 had filed a pesticide petition (PP 8F2116) proposing to amend 40 CFR 180.315 by establishing a tolerance for the residues of the insecticide *O, S*-dimethyl phosphoramidothioate in or on the raw agricultural commodities peppers at 2.0 ppm; sugar beet (roots) at 0.02 ppm; and sugar beet (tops) at 0.4 ppm.

Mobay has submitted an amendment proposing to amend the petition by increasing the proposed tolerance on sugar beet (tops) from "0.4" to "0.5" ppm. The proposed analytical method for determining residues is by gas chromatographic procedure using a cesium bromide thermionic detector.

(Sec. 408(d)(1), 68 Stat. 512; 7 U.S.C. 135)

Dated: August 8, 1980.

Douglas D. Campt,

Director, Registration Division, Office of Pesticide Programs.

[FR Doc. 80-24715 Filed 8-14-80; 8:45 am]

BILLING CODE 6560-01-M

[PP 8G2130/T264; FRL 1571-7]

Propylene; Renewal of a Temporary Exemption From the Requirement of a Tolerance

AGENCY: Environmental Protection Agency (EPA).

ACTION: Notice.

SUMMARY: EPA has renewed a temporary exemption from the requirement of a tolerance for residues of the plant growth regulator propylene in or on the raw agricultural commodity sugar beets.

ADDRESS: Robert J. Taylor, Product Manager (PM) 25, Registration Division (TS-767), Office of Pesticide Programs, Rm. E-359, Environmental Protection Agency, 401 M Street SW., Washington, D.C. 20460.

FOR FURTHER INFORMATION CONTACT: Robert J. Taylor (202-426-2196).

SUPPLEMENTARY INFORMATION: On November 28, 1978, the EPA issued a notice that published in the Federal Register (43 FR 55462) that The Great Western Sugar Co., Agricultural Research Center, 11939 Sugarmill Road, Longmont, CO 80501 had filed a pesticide petition (PP 8G2130). The petition requested that an exemption from the requirement of a tolerance be established for residues of propylene in or on the raw agricultural commodity sugar beets. This temporary exemption from the requirement of a tolerance expired October 20, 1978.

The Great Western Sugar Co. has requested a one-year renewal of the temporary exemption to permit the marketing of the above raw agricultural commodity when treated in accordance with the experimental use permit, which is being renewed under the Federal Insecticide, Fungicide, and Rodenticide Act (FIFRA) as amended (92 Stat. 819; 7 U.S.C. 136).

The scientific data reported and all other relevant material have been evaluated, and it has been determined that renewal of the temporary exemption will protect the public health. Therefore, the temporary exemption is renewed on the condition that the plant growth regulator be used in accordance with the following provisions:

1. The total amount of the plant growth regulator must not exceed the amount authorized in the experimental use permit; and

2. The Great Western Sugar Co. must immediately notify the EPA of any findings from the experimental use that have a bearing on safety. The firm will also keep records of production, distribution, and performance and on request make the records available to any authorized officer or employee of the EPA of the Food and Drug Administration.

This temporary exemption expires on August 30, 1981. Residues in or on sugar beets after expiration of this temporary exemption will not be considered actionable if the pesticide is legally applied during the term of, and in accordance with, the experimental use permit and the temporary exemption. This temporary exemption may be revoked if the experimental use permit is revoked or if any scientific data or experience with this pesticide indicate such revocation is necessary.

(Sec. 408(j), 68 Stat. 561; 21 U.S.C. 136a(j))

Dated: August 11, 1980.

Douglas D. Campt,

Director, Registration Division, Office of Pesticide Programs.

[FR Doc. 80-24716 Filed 8-14-80; 8:45 am]

BILLING CODE 6560-01-M

[FRL 1572-8]

Draft General NPDES Permits and Public Hearings for Oil and Gas Operations in Portions of the Gulf of Mexico; Fact Sheet

AGENCY: Environmental Protection Agency.

ACTION: Notice of Draft General NPDES Permits and Public Hearings.

SUMMARY: The Regional Administrator of Region VI has tentatively decided to issue three general NPDES permits for certain dischargers in the Offshore Subcategory of the Oil and Gas Extraction Point Source Category. These general NPDES permits will establish effluent limitations, standards, prohibitions, and other conditions on discharges from oil and gas facilities. The facilities to be covered by these permits are located in the Gulf of Mexico seaward of the inner boundary of the Territorial Seas off the States of Louisiana and Texas, and west of 87°40' West, Longitude exclusive of certain potentially productive or unique biological areas identified in Part III B and in the draft general NPDES permits.

DATES: Comments must be received by September 29, 1980.

ADDRESSES: Comments should be sent to the Regional Administrator, Region VI, U.S. Environmental Protection Agency, 1201 Elm Street, First International Building, Dallas, Texas 75270.

FOR FURTHER INFORMATION CONTACT: Ms. Mary Callahan, Administrative Branch, Region VI, U.S. Environmental Protection Agency, 1201 Elm Street, First

International Building, Dallas, Texas 75270. Telephone: (214) 767-2765).

Fact Sheet and Supplementary Information

I. Background

A. General Permits

Section 301(a) of the Clean Water Act (the Act) provides that the discharge of pollutants is unlawful except in accordance with a National Pollutant Discharge Elimination System (NPDES) permit. Although such permits to date have generally been issued to individual dischargers, EPA's regulations authorize the issuance of "general permits" to categories of dischargers. See 40 CFR 122.59 (45 FR 33447, May 19, 1980). EPA may issue a single, general permit to a category of point sources located within the same geographic area whose discharges warrant similar pollution control measures.

The Director of an NPDES permit program is authorized to issue a general permit if there are a number of point sources operating in a georgraphic area that:

1. Involve the same or substantially similar types of operations;
2. Discharge the same types of wastes;
3. Require the same effluent limitations or operating conditions;
4. Require the same or similar monitoring requirements; and
5. In the opinion of the Director, are more appropriately controlled under a general permit than under individual permits.

Violation of a condition of a general permit consititutes a violation of the Clean Water Act and subjects the discharger to the penalties specified in section 309 of the Act.

Any owner or operator authorized by a general permit may be excluded from coverage of a general permit by applying for an individual permit. This request may be made by submitting an NPDES permit application, together with reasons supporting the request no later than 90 days after publication by EPA of the final general permit in the Federal Register. The Director may require any person authorized by a general permit to apply for and obtain an individual permit. Any interested person may petition the Director to take this action. However, individual permits will not be issued for oil and gas facilities covered by a general permit unless it can be clearly demonstrated that inclusion under the general permit inappropriate. The Director may consider the issuance of individual permits when:

1. The discharge(s) is a significant contributor of pollution;
2. The discharger is not in compliance with the terms and conditions of the general permit;
3. A change has occurred in the availability of demonstrated technology or practices for the control or abatement of pollutants applicable to the point source;
4. Effluent limitations guidelines are subsequently promulgated for the point sources covered by the general permit;
5. A Water Quality Management plan containing requirements applicable to such point sources is approved; or
6. The requirements listed in the previous paragraphs are not met.

B. Oil and Gas Operations in the Gulf of Mexico

In Region VI, there are currently over 2,000 dischargers operating in the Offshore Subcategory of the Oil and Gas Extraction Point Source Category. To date, only three dischargers have received a final NPDES permit; another nine draft permits have been public noticed. Those permits are for facilities operating in the Flower Gardens lease blocks in the Gulf of Mexico, an area excluded from these draft general permits. Although applications for permits have been received from most of facilities, a lack of resources and higher priorities have precluded EPA from processing those applications. For some time EPA's efforts have been focused on industrial dischargers considered major contributors of pollution and on industrial discharges located near population centers.

Because these offshore facilities have not been issued permits, they are not in compliance with the Act and may be subject to enforcement actions, including citizen suits under section 505 of the Act. Furthermore, in the absence of permits, there are currently no discharge limitations, and no reporting or monitoring requirements applicable to these dischargers.

The large number of existing unpermitted facilities operating in the Gulf of Mexico has prompted EPA to formulate these draft general permits for public review and comment. If issued, these permits will enable these facilities to maintain compliance with the Act and will extend environmental and regulatory controls to a large number of dischargers. The issuance of these draft general permits is warranted by the particular administrative and environmental conditions in the Gulf of Mexico. Other areas of the Outer Continental Shelf may require different permitting strategies and different permit conditions for offshore oil and gas facilities.

II. Nature of Discharges From Offshore Oil and Gas Facilities

The Offshore Subcategory of the Oil and Gas Extraction Point Source Category includes facilities engaged in the production, field exploration, drilling, well production, and well treatment within the oil and gas extraction industry which are located seaward of the inner boundary of the Territorial Seas.

Operations within the Offshore Subcategory can be divided into distinct phases: exploration and production. Exploratory operations involve drilling to determine the nature and extent of potential hydrocarbon reserves. Exploratory drilling operations are of short duration at a given site, involve a small number of wells, and are generally conducted from mobile drilling units. These include units with traditional ship's hulls or semi-submersible craft—essentially a floating platform with submerged hulls which support a unit above water.

Production operations involve development drilling and the actual recovery of hydrocarbons from underground geologic formations. Production platforms are usually fixed for long periods of time with as many as 20 to 40 wells drilled from a single platform.

The discharges from offshore operations can be divided into distinct categories:

A. Drilling Fluids

Drilling fluid is defined as any fluid sent down the hole, including drilling muds, gelling compounds, weighting agents, and any speciality products, from the time a well is begun until final cessation of drilling in that hole. Generally, two basic types of muds, water-based and oil-based muds, are used in drilling. Water-based muds are usually mixtures of fresh water or sea water with clays. Oil-based muds (invert emulsion muds or oil emulsion muds) are mixtures of diesel oil and clays with water or brine emulsified in the oil.

Drilling fluids are used in both exploration and production drilling to maintain hydrostatic pressure control in the well, lubricate the drilling bit, and remove drill cuttings from the well. Oil-based muds are used for special drilling requirements such as tightly consolidated subsurface formations, water sensitive clays, and shales. Specific needs of a drilling program may also require the addition of additives to the drilling fluids.

B. Drill Cuttings

Drill cuttings are mineral particles generated by drilling into subsurface geologic formations. Drill cuttings are carried to the surface of the well with the circulation of the drilling fluids and separated from the fluids on the platform by solid separation equipment (screens and shakers).

C. Producted Water ("Formation Water" or "Brine")

Produced water includes water and suspended particulate matter, brought to the surface in conjunction with the recovery of oil and gas from underground geologic formations. Produced waters are primarily generated during the production phase of oil and gas operations with the amount generated dependent upon the method of recovery and the nature of the formation. Geologic formations contain different oil-water or gas-water mixtures which are produced at different times:

1. In some formations, water is produced with the oil and gas in the early stages of production;
2. In others, water is not produced until the formation has been significantly depleted; and
3. In still others, water is never produced.

D. Produced Sands

Produced Sands include sands and other solids removed from the produced waters.

E. Deck Drainage

Deck drainage includes all waste resulting from platform washings, deck washings, tank cleaning operations, and run-off from curbs, gutters, and drains including drip pans and work areas.

F. Sanitary Wastes

Sanitary wastes include human body waste discharges from toilets and urinals.

G. Domestic Wastes

Domestic wastes include materials discharged from sinks, showers, laundries, and galleys.

H. Cooling water

Cooling water means once-through, non-contact cooling water.

I. Desalinization Unit Discharge

Desalinization unit discharge means any wastewater associated with the process of creating fresh water from seawater.

III. Conditions in the Draft General Permits

A. Geographic Areas of Draft General Permits

The three draft general permits noticed today are applicable to most dischargers in the Offshore Subcategory of the Oil and Gas Extraction Point Source Category, 40 CFR Part 435, operating in existing lease areas in the Gulf of Mexico. There are three separate draft general permits for three general permit areas:

1. Lease blocks located seaward of the respective outer boundaries of the Territorial Seas off the States of Louisiana and Texas and west of 87°40′ West Longitude, LESS AND EXCEPT lease blocks identified in Part III B of the draft general permit;
2. Lease blocks located landward of the outer boundary of the Territorial Seas off the State of Louisiana, LESS AND EXCEPT lease blocks identified in Part III B of the draft general permit; and
3. Lease blocks located landward of the outer boundary of the Territorial Seas off the State of Texas, LESS AND EXCEPT lease areas identified in Part III B of the draft general permit.

These draft general permits do not authorize discharges into any body of water landward of the inner boundary of the Territorial Seas or any wetlands adjacent to such waters. Areas leased by the Bureau of Land Management during the terms of these permits and which are located within the general permit areas will be covered by these general permits.

Certain lease blocks or lease areas containing potentially productive or unique biological communities are specifically excluded from these draft general permits. The excluded lease blocks or lease areas are listed in Part III B below and Part III B of each draft general permit.

To determine the potential for degradation of the marine environment within the general permit area, EPA has relied heavily on the Environmental Impact Statements (EIS) developed by the Bureau of Land Management (BLM), particularly the draft and final EIS for Lease Sales A 62 and 62. BLM has determined that exploration and development activities may cause harm to productive and unique biological communities located in areas of topographical relief and hard bottoms. BLM further identified four types of biological stipulations to protect these communities from adverse impacts of the discharges of oil and gas facilities. Since the permit conditions described in these draft general permits do not specify limitations similar to those recommended by BLM, EPA has decided to identify certain productive or unique biological areas and exclude, for the purpose of further evaluation, these areas from the general permit area and subsequently coverage by these draft general permits.

In addition to the EIS prepared by BLM, the Agency reviewed an EIS prepared by the Gulf of Mexico Fishery Management Council and the National Marine Fisheries Services and requested recommendations from the National Oceanographic and Atmospheric Administration (NOAA). Since no EIS has been developed for the Territorial Seas of the States of Texas and Louisiana, the Agency reviewed the following publications:

BLM's Fish and Wildlife Service

1. Mississippi Deltaic Plain Region Ecological Characterization,
2. An Ecological Characterization Study of the Chenier Plain Coastal Ecosystem of Louisiana and Texas,
3. Drafts for a Ecological Characterization Study of the Texas Coastal Ecosystem on the Gulf of Mexico, and
4. Nesting Colonies of Seabirds and Wading Birds, Coastal Louisiana, Mississippi, and Alabama.

Since less information is available on lease areas within the Territorial Seas off the States of Louisiana and Texas comments are specifically requested to further identify potentially productive or unique biological communities in these areas.

B. Excluded Areas and Request for Comments

The following tables list the lease blocks from these draft general permits:

Lease Areas Seaward of the Outer Boundary of the Territorial Seas

Lease Area	Bank Name	Lease Block
South Padre Island	Sebree Bank	1070, 1071, 1084
North Padre Island	Mysterious	A 83, A 84
	Black Fish Ridge	A 72, A 61
	Dream	A 40, A 41
Mustang Island	Southern	A 9, A 16
Mustang Island East Addition	Hospital	A 136
	North Hospital	A 117
	Aransas	A 117, A 118
	South Baker	A 95
	Baker	A 62
	Big and Small Dunbar	A 54, A 55, A 56
High Island South Addition	Stetson Bank	A 502, A 513
	Claypile Bank	A 447, A 464
	Applebaum Bank	A 590, A 591
	Coffee Lump	A 521, A 546
	Flower Gardens	A 573, A 596
High Island East Addition South Extension	29 Fathom Bank	A 329
	Coffee Lump	A 340, A 341, A 358, A 359 A 360, A 361
	East and West Flower Gardens	A 351 - A 355
		A 361 - A 368
		A 373 - A 390
		A 394 - A 403
	28 Fathom Bank	A 391, A 392, A 371
East Breaks	Flower Gardens	173, 217
West Cameron South Addition	Bright Bank	650, 657, 656, 660, 661
	28 Fathom Bank	653
	29 Fathom Bank	590, 591
East Cameron South Addition		379
Garden Banks	Geyer Bank	
	Elver Bank	
	Alaminos Bank	
	Flower Gardens	95 - 97
		133 - 136
		138 - 140
		177 - 180

Lease Area	Bank Name	Lease Block
Vermillion South Addition	Sonnier Rock	305
	Bouma Bank	383, 384, 385, 393, 392
	Razak Bank	404, 405
	Sidner Bank	411, 412
		408, 409, 410
South Marsh Island South Addition	Alderdice	171, 172, 177, 178
	Parker Bank	202, 203, 194, 195
Eugene Island South Addition	Fishnet Bank	335, 336, 355, 356
	Alaminos Bank	390, 329, 228, 327
Ship Shoal South Addition	Ewing Bank	335, 336, 337, 338
		351, 350
South Timbalier South Addition	Daphis Bank	317, 314, 315, 316
West Delta South Addition	Sachett Bank	148

Lease Blocks Landward of the Outer Boundary of the Territorial Seas Off the State of Louisiana

Lease Area	Site Name	Offshore Block
Eugene Island Area	Point Au Fer Shell Reef	13, 14, 15 16
		9, 10
South Pass Area	Cockler Point	41
		20, 22, 29, 30

Lease Areas Landward of the Outer Boundary of the Territorial Seas Off the State of Texas

Coatal Area	Bay Area	Seaward of Bolivar Peninsula Galveston Island
Galveston Bay	East Bay Basin	East Bay
		Bolivar Roads
		Rollover Pass

BILLING CODE 6560-01-C

C. Expiration Dates

The final general permits will be issued for two-year terms. Athough NPDES permits may be issued for up to five-year terms, the Regional Administrator has for several reasons decided that only two-year term permits should be issued at this time. First, as discussed in section G of this notice, the Regional Administrator has concluded that oil and gas facilities operating under the limited scope of these permits will not cause significant degradation of the marine environment. The information available, at this time however, does not warrant the same conclusions of no significant degradation of the marine environment for operations over and extended period of time. Second, within the next two years, the Agency anticipates both that new information on the effects of oil and gas operations will be available and that new regulations specifying additional technology-based and section 403(c) ocean discharge limitations will be promulgated. Reevaluation of the conditions contained in these permits at the end of the two-year terms is therefore appropriate.

D. Notification by Permittees

Part I E of each draft general permit requires each operator of a lease block within the general permit area to notify the Regional Administrator in writing of the commencement and termination of discharges from their facilities. This written notificaiton must include the owner or operator's legal name and address, lease block number, or if none, the name assigned to the lease area, and the number and type of facilities located within the lease block or area. Failure to provide this written notification means that the facility is not authorized to discharge under the general permit. Notification is not required for movements of exploratory rigs within the general permit areas.

40 CFR 122.53(b) requires any person who is proposing a new discharge to submit a permit application at least 180 days before the date on which the discharge is to commence. Although these draft permits require notification of commencement and final cessation of activities within the general permit area, individual permit applications are not required to be submitted by persons discharging within the general permit area. Consequently, with respect to those operators, the Regional Administrator is now waiving the requirement contained in 40 CFR 122.53(b) that as new dischargers, those operators submit permit applications at least 180 days prior to the commencement of discharge.

E. Technology-Based Effluent Limitations

The Clean Water Act requires all dischargers to meet effluent limitations based on the technological capacity of dischargers to control the discharge of their pollutants. Section 301(b)(1)(A) requires the application of "Best Practicable Control Technology currently available" (BPT). On April 13, 1979, EPA promulgated final effluent limitations guidelines establishing BPT for the Offshore Subcategory (40 CFR Part 435). These limitations have been incorporated into these draft general permits.

The BPT limitations guidelines restrict the concentration of oil and grease in produced waters to a monthly average of 48 mg/l and a daily of 72 mg/l. However, because these permits require monthly monitoring, a monthly average cannot be calculated and only the daily maximum (72 mg/l) is incorporated into the permits (see 40 CFR Part 435 for more detailed explanation). Although technology-based limitations usually limit the total mass of pollutants which may be discharged, the variable nature of the flow of produced waters requires the use of concentration limits.

BPT effluent limitations guidelines require no discharge of free oil in all other discharges associated with the drilling operations (deck drainage, drilling fluids, drill cuttings, and well treatment fluids.) The term "no discharge of free oil" means that a discharge does not cause a film or sheen upon or a discoloration on the surface of the water or adjoining shorelines or cause a sludge or emulsion to be deposited beneath the surface of the water or upon adjoining shorelines (40 CFR Part 435).

Although the BPT limitation requires that in sanitary wastes from facilities housing ten or more persons maintain the concentration of chlorine be maintained as close to 1 mg/l as possible, these permits provide that any facility using an approved marine sanitation device that complies with section 312 of the Act shall be in compliance with the permit limitations.

F. Other Discharge Limitations

In addition to the BPT limitations guidelines promulgated under 40 CFR 435, the permits incorporate several other provisions. The discharge of oil-based drilling fluids and halogenated phenol compounds is prohibited. The facility operator is also required to minimize the discharge of dispersants, surfactants, and detergents except as necessary to comply with the safety requirements of Occupational Safety and Health Administration and United States Geological Survey. This restriction applies to tank cleaning and other operations which do not directly involve the safety of workers. This restriction is imposed because detergents disperse and emulsify oil thereby enhancing toxicity and making the detection of a discharge of oil more difficult. This restriction is imposed because detergents disperse and emulsify oil thereby enhancing toxicity and making the detection of a discharge of oil more difficult. These limitations have been established pursuant to sections 402 and 403 of the Act.

G. Ocean Discharge Criteria

The Ocean Discharge Criteria, section 403 of the Act, requires that the environmental impact of discharges including potential degradation of marine waters be determined prior to the issuance of an NPDES permit. Section 403(c) further requires EPA to promulgate guidelines to determine degradation and specifies the factors to be considered in deriving necessary permit limits. EPA has proposed ocean discharge guidelines (45 FR 9548, February 12, 1980), but final guidelines have not been promulgated. Until such final guidelines are promulgated, section 403(a)(1) provides that a permit may be issued if it is determined to be in the "public interest". On November 14, 1979, EPA published notice of its interim policy for implementing section 403 (44 FR 65752). In relevant part, this notice provides that:

> * * * pending promulgation of final ocean discharge guidelines, the criteria set forth in section 403(c) of the Act are to be considered and applied in the issuance, reissuance or review of all NPDES permits for ocean dischargers. In addition, except where circumstances make it inappropriate to do so, the ocean dumping criteria in 40 CFR Part 227 are to be applied to the fullest extent possible before issuing, reissuing, or reviewing any such NPDES permits.

These draft general permits for oil and gas facilities operating in the Gulf of Mexico are issued based on the determination of "public interest" and in accordance with the interim policy for implementing section 403. Recognizing the need for pollution control in the Gulf of Mexico and the priority given to energy related issues, EPA has determined that it is in the public interest to issue these draft general permits.

In accordance with the 403(c) interim policy, EPA has conducted a review of the available literature to address the potential degradation of the marine

environment. Based on this review, the Regional Administrator has concluded that operations under the terms of this permit will not cause unreasonable degradation of the marine environment. However, this conclusion is predicated on the exclusion of productive and unique biological areas from the general permit area and the two-year authorization to discharge. The record supporting this determination including a summary of available literature is available for inspection and copying.

These permits are, in effect, interim permits. The Agency, through a Drilling Muds and Formation Waters Task Force, is undertaking a significant research effort to determine the toxicity of drilling muds and formation waters. This effort will produce information on the potential for environmental degradation from the discharges of oil and gas facilities. Additionally, the Agency has recently entered into a consent decree requiring EPA to promulgate new source performance standards for the offshore subcategory. *Natural Resources Defense Council* v. *EPA* No. 79-3442 (D.C.C., filed Dec. 21, 1979). Subsequent permits will incorporate any additional ocean discharge or technology-based limitations resulting from these efforts.

EPA's interim policy is to apply the ocean dumping criteria wherever appropriate. The primary aspect of the ocean dumping criteria, as they relate to the discharges from oil and gas facilities, is compliance with the "Limiting Permissible Concentration" (LPC). The LPC defined for the liquid phase of a material is:

(a) That concentration of a constituent which after allowance for initial mixing (dispersion or diffusion after four hours) does not exceed applicable marine water quality criteria, or when there are no applicable marine water quality criteria,

(b) That concentration of waste in the receiving water which, after allowance for initial mixing will not exceed a toxicity threshold defined as 0.01 of a concentration shown to be acutely toxic to appropriate sensitive marine organisms in a bioassay.

(c) If there is reasonable scientific evidence on a specific waste material to justify the use of an application factor other than 0.01 an alternative application factor shall be used.

The LPC defined for the suspended particulate and solid phase of a material means that concentration which will not cause unreasonable acute or chronic toxicity or sublethal adverse effects based on bioassay results using appropriate sensitive marine organisms for the suspended particulate phase, or appropriate benthic marine organisms in the case of the solid phase; or which will not cause accumulation of toxic materials in the human food chain. The bioassay used in both of the definitions for liquid phase and particulate or solid phase LPC's is defined as the lethal concentration for fifty percent (LC_{50}) of the test organisms.

After a review of the available literature and careful consideration of the general permit areas, EPA has determined that it is inappropriate to incorporate the LPC in these draft general permits. The information available to the Agency at this time indicates that the discharges from oil and gas facilities have a potential for significant impact on benthic marine communities, and in certain cases, the application of an LPC may be appropriate. However, the effects on benthic communities of the Gulf of Mexico should be minimized by the exclusion of potentially productive or unique biological communities from these general permit areas (Part III B). In addition, the two-year term of these draft permits and the difficulty of determining LPC's for the numerous facilities subject to this permit, make use of the LPC inappropriate in these permits. One aspect of the Drilling Muds and Formation Waters Task Force is investigation of the possibility of deriving LPC's for generic classes of drilling muds. The results of the Task Force will be incorporated in subsequent permits.

G. Monitoring and Enforcement

These draft general permits require dischargers to monitor the monthly concentration of oil and grease in produced water discharges and the chlorine in sanitary waste discharges. In addition, monthly monitoring of the produced water flow rate is required. Monthly volume estimates are required for drilling fluids, drill cuttings, deck drainage, produced sand, and well treatment fluids. Discharge Monitoring Reports (DMR's) must be submitted annually. A chemical inventory of all materials added down the well must be maintained and all records retained for three years.

H. State Certification

Section 301(b)(1)(C) of the Act requires that NPDES permits contain conditions which ensure compliance with applicable State water quality standards or limitations. Section 401 requires that States certify that Federally-issued permits are in compliance with State law.

Two of these permits are for operations within the Territorial Seas off the States of Louisiana and Texas. EPA is requesting State officials to review and provide appropriate certification of these two draft general permits pursuant to 40 CFR 124.53.

I. Oil Spill Requirements

Section 311 of the Act prohibits the discharge of oil and hazardous materials in harmful quantities. In the 1978 amendments to section 311, Congress clarified the relationship between this section and discharges permitted under section 402 of the Act. It was the intent of Congress that routine discharges permitted under section 402 be excluded from section 311. Discharges permitted under section 402 are not subject to section 311 if they are:

1. In compliance with a permit under section 402 of the Act;
2. Resulting from circumstances identified, reviewed and made part of the public record with respect to a permit issued or modified under section 402 of the Act, and subject to a condition in such permit; or
3. Continuous or anticipated intermittent discharges from a point source identified in a permit or permit application under section 402 of this Act, which are caused by events occurring within the scope of the relevant operating or treatment systems.

In order to clarify the relationship between permitted discharges and section 311 discharges, EPA has compiled the following list which it considers to be discharges regulated under section 311 rather than under a section 402 permit:

1. Discharges from a platform or structure on which oil or water treatment equipment is not mounted;
2. Discharges from burst or ruptured pipelines, manifolds, pressure valves or atmospheric tanks;
3. Discharges from uncontrolled wells;
4. Discharges from pumps or engines;
5. Discharges from oil gauging or measuring equipment;
6. Discharges from pipeline scraper, launching, and receiving equipment;
7. Spills of diesel fuel during transfer operations;
8. Discharges from faulty drip pans;
9. Discharges from well heads and associated valves;
10. Discharges from gas-liquid separators; and
11. Discharges from flare lines.

J. Other Legal Requirements

The Endangered Species Act requires that each Federal Agency shall ensure that any of their actions, such as permit issuance, do not jeopardize the continued existence of any endangered or threatened species or result in the destruction or adverse modification of their habitats. Since endangered species determinations have been made and incorporated into Environmental Impact Statements (EIS) for each Lease Sale conducted in the Gulf of Mexico, EPA has determined that a request for consultation with the Secretary of Interior is not necessary.

Because New Source Performance Standards have yet to be issued for the Offshore Oil and Gas Subcategory, the Agency is not required to prepare an EIS for the issuance of these general permits. The public is referred, however

to the EIS's prepared by the Department of Interior as part of the leasing process. The EIS for Lease Sale Number 62 and A62, the most recent sale, is on file with these permits for public inspection.

Public Notice of Formulation of Draft General NPDES Permits and Public Hearings on the Draft General NPDES Permits

The Regional Administrator of Region VI has tentatively decided to issue three general NPDES permits for certain dischargers in the Offshore Subcategory of the Oil and Gas Extraction Point Source Category, subject to certain effluent limitations, standards, prohibitions, and other conditions necessary to carry out the provisions of the Act. The three draft general permits cover facilities located in the following areas:

1. Permit No. TX0085642 covers lease blocks located seaward of the respective outer boundaries of the Territorial Seas off the States of Louisiana and Texas and west of 87° 40' West Longitude, less and except lease blocks indentified in Part III B of the draft general permit;
2. Permit No. LA0060224 covers lease blocks located landward of the outer boundary the Territorial Seas, off the State of Louisiana, less and except lease blocks identified in Part III B of the draft general permit; and
3. Permit No. TX0085651 covers lease blocks located landward of the outer boundary of the Territorial Seas off the State of Texas, less and except lease areas identified in Part III B of the draft general permit.

The Regional Administrator or a Presiding Officer designated by her will conduct Public Hearings on each of the above draft general permits:

1. The Hearing on Permit Nos. TX0085642 and LA0060224 will be held on October 1, 1980 at the Council Chambers, City Hall, 1300 Perdido, New Orleans, Louisiana and will be begin at 7:00 p.m. and continue until all interested persons have been heard.
2. The Hearing on Permits No. TX0085651 and TX0085642 will be held on October 2, 1980 at County Courthouse, Jury Assembly Room, 722 21st Street, Galveston, Texas and will begin at 7:00 p.m. and continue until all interested persons have been heard.

These draft general permits are based on the administration record. Among other documents, the administrative record required by 40 CFR 124.9, consists of the draft general permits and a fact sheet (published today) describing the reasons for the terms of the conditions of the draft general permits.

The administrative record (with the exception of material readily available at EPA, Region VI, or published material which is generally available) is on file in the Administrative Branch, EPA Region VI at the above address and may be inspected and copied (at a charge of $.20 per copy sheet) at any time between 8:30 A.M. and 4:00 P.M., Monday through Friday. Copies of the draft general permits and other available information may be obtained by writing to the above address.

Interested persons may submit comments on the draft general permits and administrative record to the Regional Administrator at the above address no later than September 29, 1980. The purpose of the Public Hearing is to receive comments from interested persons and the public on these draft general permits. All persons who believe that any of the conditions of the draft general permits is not appropriate or that the tentative decision to prepare these draft general permits is not appropriate have an obligation to raise all reasonably ascertainable issues and submit all arguments and factual grounds supporting their position, including all supporting material, at the close of the comment period. All supporting materials shall be included in full and may not be incorporated by reference, unless they are already a part of the administrative record in these proceedings, or consist of State or Federal and regulations. EPA documents of general applicability or other generally available reference materials.

In accordance with 40 CFR 124.12, the following is a summary of the procedures which shall be followed at the Public Hearings:

1. The Presiding Officer shall have authority to open and conclude the Hearing and to maintain order; and
2. Any persons appearing at such a hearing may submit oral or written statements and data concerning the draft general permit.

Following the Public Hearings and the close of the comment period, EPA will consider the issuance of final general permits. All comments timely submitted by interested persons in response to this notice, and statements and other evidence properly submitted at the Public Hearings will be considered by the Regional Administrator in the formulation of her final decision with respect to these draft general permits. Any person who submits timely written comments will receive notice of the Regional Administrator's final decision. Any interested person may request, by the close of the comment period, that the Regional Administrator exercise her discretion to use the non-adversarial panel procedures of Subpart F of the Consolidated Permit regulations (45 FR 33290, May 19, 1980) to process these draft general permits. Any such request must meet the requirements of 40 CFR 124.114.

Dated: August 8, 1980.

Frances E. Phillips,

Acting Regional Administrator, Region VI.

[FR Doc. 80-24693 Filed 8-14-80; 8:45 am]

BILLING CODE 6560-01-M

[PW-22; FRL 1572-1]

Rohm & Haas Co.; Withdrawal of Food Additive and Pesticide Petitions

AGENCY: Environmental Protection Agency (EPA).

ACTION: Notice.

SUMMARY: Rohm and Haas has submitted withdrawals for a pesticide petition (PP 9F2146) and a food additive petition (FAP 9H5200) for the use of the fungicide indar (4-butly-4*H*-1,2,4-triazole) and its metabolites containing the triazole moiety.

ADDRESS: Eugene M. Wilson, Product Manager (PM) 21, Registration Division (TS-767), Office of Pesticide Programs, Rm. E-349, Environmental Protection Agency, 401 M St., SW, Washington DC 20460

FOR FURTHER INFORMATION CONTACT: Eugene Wilson (202-755-1806).

SUPPLEMENTARY INFORMATION: On December 14, 1978, the EPA gave notice (43 FR 54830) that Rohm and Haas Co., Independence Mall West, Philadelphia, PA 19105, had filed a food additive petition (FAP 9H5200) and a pesticide petition (PP 9F2146). The food additive petition proposed establishment of a regulation permitting the residues of the fungicide indar (4-butyl-4*H*-1,2,4-triazole) and its metabolites containing the triazole moiety in or on the commodity wheat with a tolerance limitation of 8.0 ppm resulting in the food wheat bran. The pesticide petition proposed establishment of tolerances for the above fungicide and its metabolites in or on the raw agricultural commodities wheat and wheat straw at 2.0 ppm; meat, fat, meat byproducts of cattle, goats, hogs, horses, sheep, milk, eggs, and poultry at 0.5 ppm.

Rohm and Haas have withdrawn these petitions without prejudice to future filing in accordance with the regulations (40 CFR 121.52) pertaining to Section 408 of the Federal Food, Drug, and Cosmetic Act (21 U.S.C. 346a(d)).

Dated: August 11, 1980.

Douglas D. Campt,

Director, Registration Division, Office of Pesticide Programs.

[FR Doc. 80-24714 Filed 8-14-80; 8:45 am]

BILLING CODE 6560-01-M

[OPP 50470A; FRL 1572-3]

Rohm & Haas Co., Experimental Use Permit; Amendment

AGENCY: Environmental Protection Agency (EPA).

ACTION: Notice.

SUMMARY: Rohm & Haas Co. has requested an amendment to an experimental use permit issued in the Federal Register on April 17, 1980 (45 FR 26126).

ADDRESS: Robert J. Taylor, Product Manager (PM) 25, Registration Division (TS-767), Office of Pesticide Programs, Rm. E-359, Environmental Protection Agency, 401 M Street, SW, Washington, D.C. 20460.

: FOR FURTHER INFORMATION CONTACT: Robert J. Taylor (202-755-2196).

SUPPLEMENTARY INFORMATION: On April 17, 1980 a notice appeared in the Federal Register on page 26126 that EPA had issued an experimental use permit to Rohm and Haas Co., Philadelphia, PA 19105. Six States were inadvertantly omitted from the permit. Rohm & Haas has submitted an amendment to include the following States: Florida, Michigan, New York, North Dakota, South Dakota, and Wisconsin. The experimental use permit is amended to read:

"707-EUP-83. This experimental use permit allows the use of 20,000 pounds of the herbicide oxyflouroben on soybeans to evaluate control of weeds. A total of 72,000 acres are involved; the program is authorized only in the States of Alabama, Arkansas, Delaware, Florida, Georgia, Indiana, Iowa, Kansas, Kentucky, Louisiana, Maryland, Michigan, Minnestoa, Mississippi, Missouri, Nebraska, New Hampshire, New Jersey, New York, North Carolina, South Dakota, Tennessee, Texas, Virginia, Washington, and Wisconsin. The experimental use permit is effective from June 5, 1980 to June 5, 1981. A temporary tolerance for residues of the active ingredient in or on soybean has been established."

(Sec. 5, 92 Stat. 819 (7 U.S.C. 136))

Dated: August 11, 1980.

Douglas D. Campt,

Director, Registration Division, Office of Pesticide Programs.

[FR Doc. 80-24712 Filed 8-14-80; 8:45 am]

BILLING CODE 6560-01-M

[PP 9G2240/T258; FRL 1571-4]

(Z,Z)-3, 13-Octadecadien-1-ol Acetate; Temporary Exemption from the Requirement of a Tolerance

AGENCY: Environmental Protection Agency (EPA).

ACTION: Notice.

SUMMARY: A temporary exemption from the requirement of a tolerance has been issued for the active ingredient of the insecticide (*Z,Z*)-3,13-octadecadien-1-ol acetate in or on peaches when used as a pheromone to control the Peachtree borer.

ADDRESS: Franklin D. R. Gee, Product Manager (PM) 17, Rm. E-341, Office of Pesticide Programs, Environmental Protection Agency, 401 M Street, SW., Washington, D.C. 20460.

FOR FURTHER INFORMATION CONTACT: Franklin D. R. Gee at (202-426-9417).

SUPPLEMENTARY INFORMATION: Herculite Products, Inc., 1107 Broadway, New York, N.Y. 10010 has been issued a temporary exemption from the requirement of a tolerance for the insecticide (*Z,Z*)-3,13-octadecadien-1-ol acetate in or on peaches when used as a pheromone to control the Peachtree borer.

This temporary exemption is to permit the marketing of the above raw agricultural commodity when treated in accordance with the experimental use permit (8730-EUP-10) which is being issued under the Federal Insecticide, Fungicide, and Rodenticide Act (Pub. L. 80-104, 61 Stat. 163, as amended by Pub. L. 92-561, 86 Stat. 975, Pub. L. 94-140, 89 Stat. 754, Pub. L. 95-396, 92 Stat. 819; 7 U.S.C. 136).

The scientific data reported show that the exemption is adequate to cover residues resulting from the proposed experimental use and that such exemption will protect the public health. Therefore, the temporary exemption from the requirement of a tolerance has been established on the condition that the pesticide be used in accordance with the experimental use permit with the following provisions:

1. The total amount of the insecticide to be used will not exceed the quantity authorized by the experimental use permit.

2. Herculite Products, Inc. will immediately notify EPA of any findings from the experimental use that have a bearing on safety. The company will also keep records of production, distribution, and performance and on request make the records available to any authorized officer or employee of EPA or the Food and Drug Administration (FDA).

This temporary exemption expires July 7, 1981. Residues in or on the above raw agricultural commodity after expiration of this temporary exemption will not be considered actionable if the pesticide is legally applied during the term of, and in accordance with, the provisions of the experimental use permit and the temporary exemption. This temporary exemption may be revoked if the experimental use permit is revoked or if any scientific data or experience with this pesticide indicate such revocation is necessary to protect the public health.

(Sec. 408(j), 68 Stat. 516, (21 U.S.C. 346a(j))

Dated: August 8, 1980.

Douglas D. Campt,

Director, Registration Division, Office of Pesticide Programs.

[FR Doc. 80-24717 Filed 8-14-80; 8:45 am]

BILLING CODE 6560-01-M

[FRL 1473-1]

Availability of Environmental Impact Statements

AGENCY: Office of Environmental Review (A-104), U.S. Environmental Protection Agency.

PURPOSE: This notice lists the Environmental Impact Statements (EISs) which have been officially filed with the EPA and distributed to Federal Agencies and interested groups, organizations and individuals for review pursuant to the Council on Environmental Quality's Regulations (40 CFR Part 1506.9).

PERIOD COVERED: This notice includes EIS's filed during the week of August 4, 1980 to August 8, 1980.

REVIEW PERIODS: The 45-day review period for draft EIS's listed in this Notice is calculated from August 15, 1980 and will end on September 29, 1980. The 30-day review period for final EIS's as calculated from August 15, 1980 will end on September 15, 1980.

EIS AVAILABILITY: To obtain a copy of an EIS listed in this Notice you should contact the Federal agency which prepared the EIS. This Notice give a contact person for each Federal agency which has filed an EIS during the period covered by the Notice. If a Federal agency does not have the EIS available upon request you may contact the Office of Environmental Review, EPA, for further information.

BACK COPIES OF EIS'S: Copies of EIS's previously filed with EPA or CEQ which are no longer available from the originating agency are available with charge from the following sources:

For public availability and/or hard copy reproduction of EIS's filed prior to

March 1980: Environmental Law Institute, 1346 Connecticut Avenue, NW., Washington, DC 20036.

For hard copy reproduction or microfiche: Information Resources Press, 1700 North Moore Street, Arlington, Virginia 22209, (703) 558-8270.

FOR FURTHER INFORMATION CONTACT: Kathi L. Wilson, Office of Environmental Review (A-104), Environmental Protection Agency, 401 M Street, SW., Washington, DC 20460, (202) 245-3006.

SUMMARY OF NOTICE: On July 30, 1979, the CEQ Regulations became effective. Pursuant to Section 1506.10(a), the 30-day review period for final EIS's received during a given week will now be calculated from Friday of the following week. Therefore, for all final EIS's received during the week of August 4, 1980 to August 8, 1980 the 30-day review period will be calculated from August 15, 1980. The review period will end on September 15, 1980.

Appendix I sets forth a list of EIS's filed with EPA during the week of August 4, 1980 to August 8, 1980. The Federal agency filing the EIS, the name, address, and telephone number of the Federal agency contact for copies of the EIS, the filing status of the EIS, the actual date the EIS was filed with EPA, the title of the EIS, the State(s) and County(ies) of the proposed action and a brief summary of the proposed Federal action and the Federal agency EIS number, if available, is listed in this Notice. Commenting entities on draft EIS's are listed for final EIS's.

Appendix II sets forth the EIS's which agencies have granted an extended review period or EPA has approved a waiver from the prescribed review period. The Appendix II includes the Federal agency responsible for the EIS, the name, address, and telephone number of the Federal agency contact, the title, State(s) and County(ies) of the EIS, the date EPA announced availability of the EIS in the Federal Register and the newly established date for comments.

Appendix III sets forth a list of EIS's which have been withdrawn by a Federal agency.

Appendix IV sets forth a list of EIS retractions concerning previous Notices of Availability which have been made because of procedural noncompliance with NEPA or the CEQ regulations by the originating Federal agency.

Appendix V sets forth a list of reports or additional supplemental information relating to previously filed EIS's which have been made available to EPA by Federal agencies.

Appendix VI sets forth official corrections which have been called to EPA's attention.

Dated: August 12, 1980.

William N. Hedeman, Jr.,

Director, Office of Environmental Review (A-104).

Appendix I—EIS's Filed With EPA During the Week of August 4 Through 8, 1980

U.S. ARMY CORPS OF ENGINEERS

Contact: Mr. Richard Makinen, Office of Environmental Policy, Attn: DAEN-CWR-P, Office of the Chief of Engineers, U.S. Army Corps of Engineers, 20 Massachusetts Avenue, Washington, D.C. 20314, (202) 272-0121.

Draft

Kake Small Boat Harbor Navigation Improvement, Alaska, August 7: Proposed are navigation improvements for the Kake Small Boat Harbor on Kupreanof Island, Alaska. Three alternative plans are considered. Plan A would develop an 8.6 acre moorage basin, construct two rubble mound breakwaters and create a 2 acre staging area. Plan B would consist of the mooring basin and staging area and would also include the use of a composite rubble mount/sheet pile breakwater system. Plan C would develop a 9 acre moorage basin, a 2 acre staging area and a single 1,100 foot long breakwater at Portage Cove. The cooperating agency is DOI. (Alaska District.) (EIS Order No. 800576.)

Draft

Maline Creek Water Resources Investigation, St. Louis County, Mo., August 7: Proposed is a flood control plan for Maline Creek in St. Louis County, Missouri. The selected plan involves: (1) 8 detention sites, (2) 3.29 miles of channel widening, (3) 5.05 miles of low level flood walls, (4) 3.31 miles of low level levee, (5) 77 acres of clearing, (6) 5 bridge replacements, (7) 2 bridge improvements, (8) construction of 18 aquatic habitat structures, (9) 5 fish ponds, (10) acquisition of 340 acres of floodplain for open space, and (11) 10 miles of recreational trails. 517 alternatives are considered. (St. Louis District.) (EIS Order No. 800577.)

DEPARTMENT OF COMMERCE

Contact: Dr. Robert T. Miki, Acting Deputy Assistant Secretary for Regulatory Policy, Department of Commerce, Washington, D.C. 20230, (202) 377-2482.

National Oceanic and Atmospheric Administration

Final

Louisiana Coastal Resources Program, CZM, Louisiana, August 8: Porposed is the Louisiana State Coastal Resources Program. The program provides for: 1) application of a new set of comprehensive state coastal policies, 2) implementation of a new coordinated permit system, 3) procuedures to insure deep water port and governmental activities are consistent with the guidelines, 4) management of unique coastal areas, 5) procedures to assure that Federal government activities are consistent with program policies, 6) consideration of national interests, and 7) other features. Comments made by: AHP, USDA, DOC, HUD, DOI, DOT, EPA, FERC, GSA, COE, DOD, groups, individuals and businesses. (EIS Order No. 800580.)

DEPARTMENT OF DEFENSE, AIR FORCE

Contact: Dr. Carlos Stern, Deputy for Environment and Safety, Department of the Air Force, Room 4C885, Pentagon, Washington, D.C. 20330, (202) 697-9297.

Final

Beale AFB, Operation of the Pave Paws Radar System, Yuba County, Calif., August 5: Proposed is the operation of the Pave Paws Radar System at the Beale Air Force Base in Yuba County, California. The purpose of the System is to detect, track, and provide early warning of sea-launched ballistic missiles. A secondary purpose of the System is to assist the USAF Spacetrack System by traking objects that are orbiting the earth. With the Pave Paws in operation, older radars at three other locations would be retired. Comments made by: EPA, COE, HEW, DOI, DOC, State and local agencies, groups, individuals and businesses (EIS Order No. 80057.)

DEPARTMENT OF DEFENSE, NAVY

Contact: Mr. Ed Johnson, Head, Environmental Impact Statement/RDT&E Branch, Office of the Chief of Naval Operations, Department of the Navy, Washington, D.C. 20350, (202) 697-3689.

Draft Supplement

Oceana NAS/Fentress Landing Field (DS-2), Virginia, August 6: Proposed is the continued implementation of the Master Jet Base Oceana Air Installation Compatible Zone study by planning and development of MCON proposals to acquire additional restrictive easements over land that lies within Accident Potential Zones and/or high Noise Zones adjacent to both the Naval Air Station Oceana in Virginia Beach and Auxiliary Landing Field Fentress in Chesapeaks, Virginia. (EIS Order No. 800583.)

DEPARTMENT OF ENERGY

Contact: Dr. Robert Stern, Acting Director, NEPA Affairs Division, Department of Energy, Mail Station 4G-064, Forrestal Bldg., Washington, D.C. 20585, (202) 252-4600.

Final

Great Plains Gasification Project, Adoption, Mercer County, Wyo., August 8: Proposed is the awarding of loan guarantee for the construction of a coal gasification facility in Mercer County, Wyoming. Also planned is the construction of a 365 mile pipeline to transport the synthetic gas to Thief River Falls, Minnesota, for further distribution. The final EIS adopts a DOE final EIS, No. 780062, filed 1-20-78 and an FERC draft supplement, No. 780396, filed 4-20-78. Comments made by: DOI, AHP, HEW, STAT, EPA, COE, DOE, State agencies, groups and businesses. (EIS Order No. 800582.)

ENVIRONMENTAL PROTECTION AGENCY

Contact: Mr. Daniel Sullivan, Region II, Environmental Protection Agency, 26 Federal Plaza, New York, New York 10007, (212) 264-1858.

Draft

Highlands and Highland Falls WWT Facilities, Orange County, N.Y., August 5: Proposed is the awarding of a grant for the construction of wastewater treatment plants for the Town of Highlands and the Village of Highland Falls in Orange County, New York. The preferred alternative would involve the construction of a sewage treatment plant at Mine Dock Road which would serve the Town, and the upgrading and expansion of the existing Cragston plant which would serve the Village. Also recommended is the establishment of a septic tank management district to serve homes outside the sewered core area. (EIS Order No. 800574).

Contact: Mr. Eujene Wojcik, Region V, Environmental Protection Agency, 230 South Dearborn Street, Chicago, Illinois 60604, (312) 353-2157.

Draft

Rural Lake Waste Treatment Study 1, Crystal Lake, Benzie County, Mich., August 7: Porposed is a waste treatment system for the Crystal Lake Area in Benzie County, Michigan. It is recommended that the existing wastewater treatment plants in the area should be replaced, but that complete abandonment of on-site systems is unjustified. This action would involve: 1) construction of new sewers and a new rotating biological contractor treatment plant; 2) sewer system evaluation survey and rehabilitation of some existing sewers; 3) design and implementation of a small waste flow district; 4) site-specific analyses of existing on-site systems; 5) repair and replacement of on-site systems; and 6) cluster systems or other off-site treatment in some sections. (EIS Order No. 800578.)

Nuclear Regulatory Commission

Contact: Mr. Voss A. Moore, Assistant Director for Environmental Projects, Nuclear Regulatory Commission, P-518, Washington, D.C. 20555, 301-492-8446.

Final

Gas Hills Uranium Project, Operation, Natrona, Fremont County, Wyo., August 8: Proposed is the issuance of a source material license to be issued to Union Carbide Corporation for the operation of the Gas Hills Uranium Project in Natrona County, Wyoming. The project will involve: 1) the operation of an acid leach, ion-exchange and solvent-extraction uranium ore processing mill, and 2) the construction and operation of a heap leach facility. Five alternatives are considered. (NUREG-0702) Comments made by: EPA, DOI, FERC, USDA, COE, State and Local agencies. (EIS Order No. 800581).

Tennessee Valley Authority

Contact: Dr. Mohamed T. El-Ashry, Director of Environmental Quality, Tennessee Valley Authority, Forestry Building, Norris, Tennessee 37828, (615) 632-6450 FTS 856-6450.

Draft

Coal Gasification Project, Murphy Hill Site, Marshall County, Ala.: Proposed is the construction and operation of a commercial-scale coal gasification demonstration plant at the Murphy Hill site in Marshall County, Alabama. The plant would be capable of processing up to 20,000 tons of coal a day into a medium-Btu product gas, which would be: 1) methanated to produce substitute natural gas, 2) made available to produce liquid chemicals or gasoline, and 3) used for industrial fuel gas. Alternative sites and gasification technologies are considered. (EIS Order No. 800573.)

Department of Transportation

Contact: Mr. Martin Convisser, Director, Office of Environment and Safety, U.S. Department of Transportation, 400 7th Street, S.W., Washington, D.C. 20590, (202) 426-4357.

Federal Highway Administration

Draft

CA-101 Improvement, Redwood Valley Area, Mendocino County, Calif., August 4, 1980. Proposed is improvement of CA-101 located in the Redwood Valley Area of Mendocino County, California. The improvements would begin 0.2 mile north of CA-20 and end 4.3 miles north of Forsythe Creek for a total of 5.3 miles. The facility would be upgraded to a 4-lane freeway/expressway. In addition to no action, three alignment/design alternatives are considered. The cooperating agencies are the State of California and COE. (EIS Order No. 800572.)

Final

Banfield Transitway Project, Multnomah County, Oregon, August 7, 1980. Proposed is the Banfield Transit Project which will include a Light Rail Transit Line (LRT) and improvements to the Banfield Freeway in Multnomah County, Oregon. The LRT will consist of high-quality trunk line 14.9 miles long extending from 11th Avenue in downtown Portland to the City of Gresham. The line will be served by 29 transit stations and an expanded bus system. Improvements to the Banfield Freeway will include: 1) reconstruction between I-5 and 33rd Avenue including an additional lane between 37th and 16th Avenue, 3) widening between 33rd St. and I-205, and 4) ramp metering. The cooperating agency is the State of Oregon. (FHWA-OR-EIS-78-3-F) (UMTA-OR-23-9001) Comments made by: DOE, DOI, EPA, State and Local Agencies, Groups and Businesses. (EIS Order No. 800579.)

EIS Filed During the Week of Aug. 4 Through 8, 1980

[Statement title index—by State and county]

State	County	Status	Statement title	Accession No.	Date filed	Originating agency No.
		Supple	Oceana NAS/Fentress Landing Field (F-2)	800583	Aug. 6, 1980	USN
Alabama	Marshall	Draft	Coal Gasification Project, Murphy Hil Site	800573	Aug. 5, 1980	TVA
Alaska		Draft	Kake Small Boat Harbor Navigation Improvement	800576	Aug. 7, 1980	COE
California	Mendocino	Draft	CA-101 Improvement, Redwood Valley Area	800572	Aug. 4, 1980	DOT
	Yuba	Final	Beale AFB, Operaton of the Pave Paws Radar System.	800575	Aug. 5, 1980	USAF
Louisiana		Final	Louisiana Coastal Resources Program, CZM	800580	Aug. 8, 1980	DOC
Michigan	Benzie	Draft	Rural Lake Waste Treatment Systems, Case Study 1.	800578	Aug. 7, 1980	EPA
Missouri	St. Louis	Draft	Maline Creek Resources Investigation	800577	Aug. 7, 1980	COE
New York	Orange	Draft	Highlands and Highland Falls WWT Facilities	800574	Aug. 5, 1980	EPA
Oregon	Multnomah	Final	Banfield Transitway Project	800579	Aug. 7, 1980	DOT
Wyoming	Fremont	Final	Gas Hills Uranium Project, Operation	800581	Aug. 8, 1980	NRC
	Mercer	Final	Great Plains Gasification Project, Adoption	800582	Aug. 8, 1980	DOE
	Natrona	Final	Gas Hills Uranium Project, Operation	800581	Aug. 8, 1980	NRC

Appendix II.—*Extension/Waiver of Review Periods on EIS's Filed With EPA*

Federal agency contact	Title of EIS	Filing status/accession No.	Date notice of availability published in FEDERAL REGISTER	Waiver extension	Date review terminates
ENVIRONMENTAL PROTECTION AGENCY					
Mr. Daniel Sullivan, Region II, Environmental Protection Agency, 26 Federal Plaza, New York, New York 10007, (212) 264-1858.	Town of Highlands and Village of Highland Falls WWT Facilities, Orange County, New York.	Draft 800574	Aug. 15, 1980	Extension	Oct. 20, 1980.

Appendix II.—*Extension/Waiver of Review Periods on EIS's Filed With EPA*

Federal agency contact	Title of EIS	Filing status/accession No.	Date notice of availability published in FEDERAL REGISTER	Waiver extension	Date review terminates
DEPARTMENT OF THE INTERIOR					
Mr. Bruce Blanchard, Director, Environmental Project Review, Room 4256 Interior Bldg., Department of the Interior, Washington, D.C. 20423, (202) 343-3891.	Cape Lookout General Mgmt. Plan and Wilderness Study, North Carolina.	Draft 800548	Aug. 1, 1980	Extension	Oct. 13, 1980.

Appendix III.—*EIS's filed With EPA Which Have Been Officially Withdrawn by the Originating Agency*

Federal agency contact	Title of EIS	Filing status/accession No.	Date notice of availability published in FEDERAL REGISTER	Date of withdrawal
None.				

Appendix IV.—*Notice of Official Retraction*

Federal agency contact	Title of EIS	Status/No.	Date notice published in FEDERAL REGISTER	Reason for retraction
None.				

Appendix V.—*Availability of Reports/Additional Information Relating to EIS's Previously Filed With EPA*

Federal agency contact	Title of report	Date made available to EPA	Accession No.
None.			

Appendix VI.—*Official Correction*

Federal agency contact	Title of EIS	Filing status/accession No.	Date notice of availability published in FEDERAL REGISTER	Correction
None.				

[FR Doc. 80-24820 Filed 8-14-80; 8:45 am]
BILLING CODE 6560-01-M

FEDERAL MARITIME COMMISSION

[Docket No. 80-53]

U.S. Gulf/North Europe Discussion, Agreement No. 10178-1; Order To Show Cause

An agreement (No. 10178-1) to extend the expired U.S. Gulf/North Europe Discussion Agreement has been filed with the Federal Maritime Commission for approval pursuant to section 15 of the Shipping Act, 1916 (46 U.S.C. 814).

Agreement No. 10178 was approved on March 25, 1976, for a period ending March 1, 1978, and provided for the discussion of mutual problems by seven ocean carriers (Proponents) serving various trades between the U.S. Gulf and the United Kingdom, the Republic of Ireland, the Scandinavia-Baltic area and the Bayonne/Hamburg range.[1] Agreement No. 10178-1 would modify the basic agreement by extending its expiration date to March 1, 1983. No comments or protests were received in response to Federal Register notices published on February 1, 1978 and April 21, 1980.

The instant agreement permits the regular exchange of information concerning cargo trends and availability, frequency, quality and quantity of carrier services in the subject trades, equipment utilization (including intermodals equipment) and group consultations with shippers and port authorities. Proponents state that such an arrangement is necessary because: (1) It provides a forum for them to assess the overall structure and needs of their trades and devise means to serve these needs; (2) it is consistent with discussion agreements which the Commission has previously approved; and (3) the regulatory structure of the Gulf/North European trades is chaotic at the present time.

It is true that the Commission has approved a number of discussion agreements, but it is equally true that several such agreements have been disapproved.[2] Each is judged on its own

[1] The parties to the present extension amendment are: Combi Line; Thomas and Jas. Harrison Limited; Lykes Bros. Steamship Co., Inc.; Sea-Land Service, Inc.; Seatrain International, S.A.; and, United States Lines, Inc. Atlantic Gulf Service, AB, was a party to Agreement No. 10178, but not a signatory to the present agreement. Not all of these carriers serve the entire geographic area encompassed by the Agreement.

[2] See, for example, the conditional disapproval of the Puerto Rico and U.S. Virgin Islands/Haiti and Jamaica Discussion Agreement, No. 10277 on September 28, 1977; the denial of extensions of the U.S. Europe Discussion Agreement, No. 10022, on September 21, 1977; and the North Atlantic Discussion Agreement, No. 9989, on July 10, 1978.

merits in light of prevailing competitive circumstances.

Proponents' allegation that the regulatory structure of the Gulf/North European trades is chaotic was supported by a reference to several pending FMC agreements. It is claimed that an extension of Agreement No. 10178 is required in order for the proponents of these pending agreements to keep their proposals alive. However, two of the cited agreements have since been approved and one has been withdrawn. Since Agreement No. 10178-1 was initially filed, the Commission has approved the Gulf European Freight Association Agreement No. 10270, which permits ratemaking in the trade between U.S. Gulf ports and ports in the Bordeaux-Hamburg range and Scandinavia. Proponents are also party to several rate or conference agreements in the trade areas covered by Agreement No. 10178-1 which grant them authority to deal with the specific problems of their respective trade areas.

Carriers do not require express section 15 authority to conduct preliminary discussions leading to the filing of a proposed agreement. Hence, the presence of other pending or soon-to-expire agreements in a trade does not warrant approval of a separate discussion agreement. In such circumstances, a discussion agreement would be substantively superfluous, potentially confusing, and, for that reason, contrary to the public interest. *See Far East Conference/Pacific Westbound Conference (Agreement Nos. 8200-1, et al.)*, 19 S.R.R. 245, 250-251 (1979); *Rates on U.S. Government Cargoes*, 11 F.M.C. 263, 286 (1967); *Agreement No. 8765—Order to Show Cause*, 9 F.M.C. 333, 335-336 (1966). If the instant agreement is intended to encompass activities which extend beyond the development of specific action agreements, that intention is at best vaguely stated, and this factor alone may warrant disapproval.

Although Proponents have claimed that incursions in the trade by Baltic Shipping Company, a state-controlled carrier of the Soviet Union, justifies the proposed agreement, the Ocean Shipping Act of 1978 (Pub. L. 95-283), now provides them with direct administrative remedies for combating unfair pricing by controlled carriers.

Because Agreement No. 10178-1 is vaguely stated and potentially superfluous, it will be disapproved as contrary to the public interest unless Proponents are able to show cause to the contrary.

Therefore, it is ordered, That pursuant to sections 15 and 22 of the Shipping Act, 1916, and in accordance with § 502.66 of the Commission's rules (46 CFR 502.66), the Respondents listed in Appendix A are ordered to show cause why Agreement No. 10187-1 should not be disapproved because it is vaguely stated and potentially superfluous; and

It is further ordered, That this proceeding is limited to the submission of affidavits of fact and memoranda of law. Should any party believe an evidentiary hearing is required, that party must submit a request for such hearing accompanied by a detailed statement of the particular facts to be proven, their relevance to the issues in this proceeding, a description of the evidence which would be adduced to prove those facts, and why such proof cannot be submitted through affidavit. Requests for hearing shall be filed no later than November 10, 1980; and

It is further ordered, That this Order be published in the Federal Register and a copy served upon each Respondent; and

It is further ordered, That Respondents file affidavits of fact and memoranda of law in accordance with the second ordering paragraph hereof, no later than September 22, 1980, with the Secretary, Federal Maritime Commission, 1100 L Street, NW., Washington, D.C. 20573, in an original and 15 copies; and

It is further ordered, That the Commission's Bureau of Hearing Counsel be a party to this proceeding. Reply affidavits and a memorandum of law shall be filed by Hearing Counsel no later than October 20, 1980; and

It is further ordered, That a rebuttal memorandum and affidavits responding to the memorandum and affidavits of Hearing Counsel shall be filed by the Respondents no later than November 3, 1980; and

It is further ordered, That any other person with an interest in this proceeding may file a petition for leave to intervene in accordance with § 502.72 of the Commission's rules (46 CFR 502.72)

By the Commission.

Francis C. Hurney,

Secretary.

Appendix A

Combi Line, c/o Biehl & Co., Inc., 416 Common Street, New Orleans, Louisiana 70130.

Thomas and Jos. Harrison Limited, c/o Philips-Parr, Inc., 1642 International Trade Mart, New Orleans, Louisiana 70130.

Lykes Bros. Steamship Co., Inc., 300 Poydras Street, New Orleans, Louisiana 70130.

Sea-Land Service, Inc., P.O. Box 900, Edison, New Jersey 08817.

Seatrain International, S.A., Port Seatrain, Weehawken, New Jersey 07087.

United States Lines, Inc., 27 Commerce Drive, Cranford, New Jersey 07016.

[FR Doc. 80-24824 Filed 8-14-80; 8:45 am]

BILLING CODE 6730-01-M

FEDERAL PREVAILING RATE ADVISORY COMMITTEE

Open Committee Meetings

Pursuant to the provisions of section 10 of the Federal Advisory Committee Act (Pub. L. 92-463), notice is hereby given that meetings of the Federal Previling Rate Advisory Committee will be held on:

Thursday, September 4, 1980.
Thursday, September 11, 1980.
Thursday, September 18, 1980.
Thursday, September 25, 1980.

The meetings will convene at 10 a.m., and will be held in Room 5A06A, Office of Personnel Management Building, 1900 E Street NW, Washington, D.C.

The Federal Prevailing Rate Advisory Committee is composed of a Chairman, representatives of five labor unions holding exclusive bargaining rights for Federal blue-collar employees, and representatives of five Federal agencies. Entitlement to membership of the Committee is provided for in 5 U.S.C. 5347.

The Committee's primary responsibility is to review the prevailing rate system and other matters pertinent to the establishment of prevailing rates under subchapter IV, chapter 53, 5 U.S.C., as amended, and from time to time advise the Office of Personnel Management thereon.

These scheduled meetings will convene in open session with both labor and management representatives attending. During the meeting either the labor members or the management members may caucus separately with the Chairman to devise strategy and formulate positions. Premature disclosure of the matters discussed in these caucuses would impair to an unacceptable degree the ability of the Committee to reach a consensus on the matters being considered and disrupt substantially the disposition of its business. Therefore, these caucuses will be closed to the public on the basis of a determination made by the Director of the Office of Personnel Management under the provisions of Section 10(d) of the Federal Advisory Committee Act (Pub. L. 92-463) and 5 U.S.C., section 552b(c)(9)(B). These caucuses may, depending on the issues involved, constitute a substantial portion of the meeting.

Annually, the Committee publishes for the Office of Personnel Management, the

President, and Congress a comprehensive report of pay issues discussed, concluded recommendations thereon, and related activities. These reports are also available to the public, upon written request to the Committee Secretary.

Members of the public are invited to submit material in writing to the Chairman concerning Federal Wage System pay matters felt to be deserving of the Committee's attention. Additional information concerning these meetings may be obtained by contacting the Secretary, Federal Prevailing Rate Advisory committee, Romm 1340, 1900 E Street, NW., Washington, D.C. 20415 (202)632-9710).

Dated: August 6, 1980.

Jerome H. Ross,

Chairman, Federal Prevailing Rate Advisory Committee.

[FR Doc. 80-24759 Filed 8-14-80; 8:45 am]

BILLING CODE 6325-01-M

GENERAL ACCOUNTING OFFICE

Regulatory Reports Review; Receipt of Report Proposals

The following requests for clearance of reports intended for use in collecting information from the public were received by the Regulatory Reports Review Staff, GAO, on August 11, 1980. See 44 U.S.C. 3512(c) and (d). The purpose of publishing this notice in the Federal Register is to inform the public of such receipts.

The notice includes the title of each request received; the name of the agency sponsoring the proposed collection of information; the agency form number, if applicable; and the frequency with which the information is proposed to be collected.

Written comments on the proposed FCC and FMC requests are invited from all interested persons, organizations, public interest groups, and affected businesses. Because of the limited amount of time GAO has to review the proposed requests, comments (in triplicate) must be received on or before September 2, 1980, and should be addressed to Mr. John M. Lovelady, Senior Group Director, Regulatory Reports Review, United States General Accounting Office, Room 5106, 441 G Street, NW, Washington, DC 20548.

Further information may be obtained from Patsy J. Stuart of the Regulatory Reports Review Staff, 202-275-3532.

Federal Communications Commission

The FCC requests an extension-without-change clearance of Form 336, Report of Overseas Telecommunications Circuit Traffic. Form 336 is required by Section 43.61 of the Commission's Rules and Regulations. Common Carriers engaged in furnishing telecommunications service between the United States and overseas points must file this form annually. The FCC estimates respondents will number nine and that reporting burden will average 30 hours per response.

The FCC requests an extension-without-change clearance of Form 349-L, Application for an FM Booster Station License. Form 349-L is required by Section 325(a) of the Communications Act of 1934, as amended, and Section 73.3536 of the FCC Rules and Regulations. The form is used by applicants applying for an FM Broadcast Booster Station. FM radio broadcast stations whose signals the booster station will rebroadcast. A license for an FM broadcast translator station may ber issued to any qualified individual, organized group of individuals, broadcast licensee, or local civil government body. The FCC estimates approximately one application will be received annually and that 3 hours will be required to complete the application.

The FCC requests an extension-without-change clearance of Form 349-P, Application for Authority to Construct or Make Changes in an FM Booster Station. Form 349-P is required by Sections 73.3533 and 73.3538 of the Commission's Rules and Regulations. The form is used by applicants applying for authority to construct or make changes in an FM Booster Station. FCC estimates one application will be received annually and that 14 hours will be required to complete the application.

The FCC requests an extension-without-change clearance of Form 403, Application for Radio License or Modification Thereof Under Parts 21, 23, or 25. Form 403 is filed by applicants for a radio station license or modification of a station license. The FCC estimates approximately 6,000 applications are received annually and that each application will require 5 hours to complete.

The FCC requests an extension-without-change clearance of Form 610-B, Application for Amateur Club or Military Recreation Station License. Form 610-B is required by Parts 1.922, 97.41, and 97.47 of the Commission's Rules and Regulations. The applcation is used to apply for a amateur radio club or military recreation station license. The FCC estimates approximately 1,500 applications are received annually and that 5 minutes are required to complete the application.

The FCC requests an extension-without-change clearance of Form 714, Supplement to Application for New or Modified Radio Station Authorization Form 714 must be filed as a supplement to applications for construction of antenna's, except as a broadcase, when the antenna exceeds specifications in the Commission's Rules. Sections 17.4(f), 81.31(b), 81.32(b), 95.37(a), 97.45(a), and 99.13(a) of the Commission's Rules and Regulations require the use of this form. The FCC estimates approximately 117 applications are received annually and that one and one-half minutes are required to complete the application.

The FCC requests an extension-without-change clearance of "Travelers Information Station" applications. The Travelers Information Station is a radio station within the local government radio service in the Public Safety Radio Services Group. Applicants file on Forms 400 and 425, required by Section 90.119 of the Commission's Rules and attach supplemental data required by Section 90.242. The Travelers Information Station is intended to be a source of localized information pertinent only to the traveler in the immediate proximity of the station. Sites of such stations are intended to be air, train and bus terminals, public parks and historical sites, interstate highway interchanges, bridges and tunnels. The types of noncommercial voice information proposed to be transmitted by Travelers Information Stations are arrivals and departures at terminals and availability of parking areas and for other locations general announcement of the availability and location of services such as lodging, rest stops, service stations and descriptions of local points of interest, etc. The FCC estimates approximately 40 applications are received annually and that the average to furnish the information will average 8 hours.

Federal Maritime Commission

The FMC requests an extension-without-change clearance of General Order 15 (46 CFR Part 533), Filing of Tariffs by Terminal Operators, which requires every person performing marine terminal services in connection with common carriers by water to file with the Commission a schedule or tariff showing all its rates, charges, rules and regulations relating to or connected with the receiving, handling, storing, and/or delivering of property at its terminal facilities. The information furnished on the tariff or schedule is used by the FMC to fulfill its requlatory responsibility by keeping informed of the practices, rates and charges instituted by terminal operators, and by keeping the public informed of such practices. The FMC estimates that there is a universe of

approximately 520 respondents, each filing 12 tariff pages per year, with an average reporting burden of 15 minutes per page.

The FMC requests an extension-without-change of Form FMC-12, Application for Admission to Practice before the Federal Maritime Commission, pursuant to Paragraph 502.27, FMC Rules of Practice and Procedure (General Order 16). The FMC's rule requires persons not attorneys at law to apply for admission to practice before the Commission. The fee for filing this application is $10. The data submitted on Form FMC-12 is used by the Commission to determine whether an applicant possesses the necessary legal, technical or other qualifications to enable him to render valuable service before the Commission and is otherwise competent to advise and assist in the presentation of matters before the Commission. The FMC estimates that there are approximately 35 applicants per year and that time to complete the application averages one hour.

Norman F. Heyl,

Regulatory Reports, Review Officer.

[FR Doc. 80-24825 Filed 8-14-80; 8:45 am]

BILLING CODE 1610-01-M

DEPARTMENT OF HEALTH AND HUMAN SERVICES

Food and Drug Administration

Advisory Committees; Meeting

AGENCY: Food and Drug Administration.

ACTION: Notice.

SUMMARY: This notice announces a forthcoming meeting of a public advisory committee of the Food and Drug Administration (FDA). This notice also sets forth a summary of the procedures governing committee meetings and methods by which interested persons may participate in open public hearings conducted by the committees and is issued under section 10(a)(1) and (2) of the Federal Advisory Committee Act (Pub. L. 92-463, 86 Stat. 770-776 (5 U.S.C. App. I)), and FDA regulations (21 CFR Part 14) relating to advisory committees. The following advisory committee meeting is announced:

Neurological Device Section of the Respiratory and Nervous System Devices Panel

Date, time, and place. September 26, 9 a.m., Room 1409, 200 C St., SW., Washington, DC.

Type of meeting and contact person. Closed committee deliberations, 9 a.m. to 10 a.m.; open committee discussion, 10 a.m. to 12 m.; open public hearing, 1 p.m. to 2 p.m.; open committee discussion, 2 p.m. to 4 p.m.; Robert F. Munzner (HFK-430), Bureau of Medical Devices, Food and Drug Administration, 8757 Georgia Ave., Silver Spring, MD 20910, 301-427-7226.

General function of the Committee. The Committee reviews and evaluates available data on the safety and effectiveness of devices currently in use and makes appropriate recommendations for their regulation.

Agenda—Closed committee deliberations. The Committee will discuss a premarket approval application for an implanted neurological device to relieve pain. This portion of the meeting will be closed to permit discussion of trade secret data (5 U.S.C. 552b(c)(4)).

Open public hearing. Interested persons are encouraged to present information pertinent to sleep-monitoring devices, neurosurgical fragmentation and aspiration devices or implanted neurological stimulators to the contact person. Submission of data relative to tentative classification findings is also invited. Those desiring to make formal presentations should notify the contact person by September 19, 1980, and submit a brief statement of the general nature of the evidence or arguments they wish to present, the names and addresses of proposed participants, references to any data to be relied on, and also in indication of the approximate time required to make their comments.

Open committee discussion. The Committee will discuss a premarket approval application for an implanted neurological device to relieve pain; classification of sleep monitoring and assessment devices; discussion of premarket approval application guidelines for implanted neurological stimulators; and review of new data regarding neurosurgical aspiration and fragmentation devices.

Applications for reimbursement. Must be received by September 5, 1980.

Each public advisory committee meeting listed above may have as four separable portions: (1) An open public hearing, (2) an open committee discussion, (3) a closed presentation of data, and (4) a closed committee deliberation. Every advisory committee meeting shall have an open public hearing portion. Whether or not it also includes any of the other three portions will depend upon the specific meeting involved. The dates and times reserved for the separate portions of each committee meeting are listed above. The open public hearing portion of each meeting shall be at least 1 hour long unless public participation does not last that long. It is emphasized, however, that the 1 hour time limit for an open public hearing represents a minimum rather than a maximum time for public participation, and an open public hearing may last for whatever longer period the committee chairman determines will facilitate the committee's work. Meetings of advisory committees shall be conducted, insofar as is practical, in accordance with the agenda published in this Federal Register notice. Changes in the agenda will be announced at the beginning of the open portion of a meeting.

Any interested person who wishes to be assured of the right to make an oral presentation at the open public hearing portion of a meeting shall inform the contact person listed above, whether orally or in writing, prior to the meeting. Any person attending the hearing who does not in advance of the meeting request an opportunity to speak will be allowed to make an oral presentation at the hearing's conclusion, if time permits, at the chairman's discretion.

Persons interested in specific agenda items to be discussed in open session may ascertain from the contact person the approximate time of discussion.

A list of committee members and summary minutes of meetings may be requested from the Administrative Proceedings Staff (HFA-305), Food and Drug Administration, Rm. 4-62, 5600 Fishers Lane, Rockville, MD 20857. The FDA regulations relating to public advisory committees may be found in 21 CFR Part 14.

The Commissioner, with the concurrence of the Chief Counsel, has determined for the reasons stated that those portions of the advisory committee meetings so designated in this notice shall be closed. The Federal Advisory Committee Act (FACA), as amended by the Government in the Sunshine Act (Pub. L. 94-409), permits such closed advisory committee meetings in certain circumstances. Those portions of a meeting designated as closed, however, shall be closed for the shortest possible time, consistent with the intent of the cited statutes.

The FACA, as amended, provides that a portion of a meeting may be closed where the matter for discussion involves a trade secret; commerical or financial information that is privileged or confidential; information of a personal nature, disclosure of which would be a clearly unwarranted invasion of personal privacy, investigatory files compiled for law enforcement proposes;

information the premature disclosure of which would be likely to significantly frustrate implementation of a proposed agency action; and information in certain other instances not generally relevant to FDA matters.

Examples of portions of FDA advisory committee meetings that ordinarily may be closed, where necessary and in accordance with FACA criteria, include the review, discussion, and evaluation of drafts of regulations or guidelines or similar preexisting internal agency documents, but only if their premature disclosure is likely to significantly frustrate implementation of proposed agency action; review of trade secrets and confidential commercial or financial information submitted to the agency; consideration of matters involving investigatory files compiled for law enforcement purposes; and review of matters, such as personnel records or individual patient records, where disclosure would constitute a clearly unwarranted invasion of personal privacy.

Examples of portions of FDA advisory committee meetings that ordinarily shall not be closed include the review, discussion, and evaluation of general preclinical and clinical test protocols and procedures for a class of drugs or devices; consideration of labeling requirements for a class of marketed drugs or devices; review of data and information on specific investigational or marketed drugs and devices that have previously been made public; presentation of any other data or information that is not exempt from public disclosure pursuant to the FACA, as amended; and, notably deliberative sessions to formulate advice and recommendations to the agency on matters that do not independently justify closing.

Applications for reimbursement for participation in the meeting listed above should be sent to Ronald Wylie (HFE-90), Officer of Consumer Affairs, Food and Drug Administration, 5600 Fishers Lane, Rockville, MD 20857, rather than to the Hearing Clerk as prescribed in § 10.210 of the regulations (21 CFR 10.210). If you wish to submit an application or wish more information regarding the reimbursement program, please call Ronald Wylie at 301-443-2932.

FDA has established expedited procedures for review of any application for reimbursement for participation in the meeting announced in this notice. The Office of Consumer Affairs, FDA, will file any application for reimbursement for participation in the meeting announced in this notice in the docket for this notice.

Dated: August 8, 1980.

Jere E. Goyan,

Commissioner of Food and Drugs.

[FR Doc. 80-24535 Filed 8-14-80; 8:45 am]

BILLING CODE 4110-03-M

Advisory Committees; Notice of Meetings

AGENCY: Food and Drug Administration.

ACTION: Notice.

SUMMARY: This notice announces forthcoming meetings of public advisory committees of the Food and Drug Administration (FDA). This notice also sets forth a summary of the procedures governing committee meetings and methods by which interested persons may participate in open public hearings conducted by the committees and is issued under section 10(a) (1) and (2) of the Federal Advisory Committee Act (Pub. L. 92-463, 86 Stat. 770-776 (5 U.S.C. App. I)), and FDA regulations (21 CFR Part 14) relating to advisory committees. The following advisory committee meetings are announced:

Antimicrobial Panel

Date, time, and place. September 21 and 22, 10 a.m., Bethesda Marriott Hotel, Bethesda, MD (September 21), Conference Room M, Parklawn Bldg., 5600 Fishers Lane, Rockville, MD (September 22).

Type of meeting and contact person. Open public hearing, September 21, 10 a.m. to 11 a.m.; open committee discussion, September 21, 11 a.m. to 4:30 p.m., September 22, 9 a.m. to 4:30 p.m.; Lee Geismar (HFD-512), Bureau of Drugs, Food and Drug Administration, 5600 Fishers Lane, Rockville, MD 20857, 301-443-6057.

General function of the Committee. The Committee reviews and evaluates data on the safety and effectiveness of nonprescription drug products.

Agenda—Open public hearing. Any interested person may present data, information, or views, orally or in writing, on issues pending before the Committee. Those who desire to make such a presentation should notify the contact person before September 17, 1980, and submit a brief statement of the general nature of the data, information, or views they wish to present, the names and addresses of proposed participants, and an indication of the approximate time desired for their presentation.

Open committee discussion. The Panel will review data submitted pursuant to the over-the-counter (OTC) review's call for data for this Panel (see also 21 CFR 330.10(a)(2)). The Panel will be reviewing, voting upon, and modifying the content of summary minutes and categorization of ingredients and claims.

Applications for reimbursement. Must be received by September 4, 1980.

Miscellaneous Internal Drug Products Panel

Date, time, and place. September 28 and 29, 9 a.m., Chevy Chase Holiday Inn, Chevy Chase, MD (September 28), Conference Room C, Parklawn Bldg., 5600 Fishers Lane, Rockville, MD (September 29).

Type of meeting and contact person. Open committee discussion, September 28, 9 a.m. to 4:30 p.m.; September 29, 8 a.m. to 9 a.m.; open public hearing, September 29, 9 a.m. to 10 a.m.; open committee discussion, September 29, 10 a.m. to 3 p.m.; John R. Short (HFD-510), Bureau of Drugs, Food and Drug Administration, 5600 Fishers Lane, Rockville, MD 20857, 301-443-6156.

General function of the Committee. The Committee reviews and evaluates available data on the safety and effectiveness of nonprescription drug products.

Agenda—Open public hearing. Any interested person may present data, information, or views, orally or in writing, on issues pending before the Committee. Those who desire to make such a presentation should notify the contact person before September 22, 1980, and submit a brief statement of the general nature of the data, information, or views they wish to present, the names and addresses of proposed participants, and an indication of the approximate time desired for their presentation.

Open committee discussion. The Panel will review data submitted pursuant to the over-the-counter (OTC) review's call for data for this Panel (see also 21 CFR 330.10(a)(2)). The Panel will be reviewing, voting upon, and modifying the content of summary minutes and categorization of ingredients and claims.

Applications for reimbursement. Must be received by September 8, 1980.

FDA public advisory committee meetings may have as many as four separable portions: (1) An open public hearing, (2) an open committee discussion, (3) a closed presentation of data, and (4) a closed committee deliberation. Every advisory committee meeting shall have an open public hearing portion. Whether or not it also includes any of the other three portions will depend upon the specific meeting involved. There are no closed portions for the meetings announced in this notice. The dates and times reserved for the open portions of each committee meeting are listed above.

The open public hearing portion of each meeting shall be at least 1 hour long unless public participation does not last that long. It is emphasized, however, that the 1 hour time limit for an open public hearing represents a minimum rather than a maximum time for public participation, and an open public hearing may last for whatever longer period the committee chairman determines will facilitate the committee's work.

Meetings of advisory committees shall be conducted, insofar as is practical, in accordance with the agenda published in this Federal Register notice. Changes in the agenda will be announced at the

beginning of the open portion of a meeting.

Any interested person who wishes to be assured of the right to make an oral presentation at the open public hearing portion of a meeting shall inform the contact person listed above, either orally or in writing, prior to the meeting. Any person attending the hearing who does not in advance of the meeting request an opportunity to speak will be allowed to make an oral presentation at the hearing's conclusion, if time permits, at the chairman's discretion.

Persons interested in specific agenda items to be discussed in open session may ascertain from the contact person the approximate time of discussion.

A list of committee members and summary minutes of meetings may be requested from the Administrative Proceedings Staff (HFA-305), Food and Drug Administration, Rm. 4-62, 5600 Fishers Lane, Rockville, MD 20857, between the hours of 9 a.m. and 4 p.m., Monday through Friday. The FDA regulations relating to public advisory committees may be found in 21 CFR Part 14.

Applications for reimbursement for participation in the meetings listed above should be sent to Ronald Wylie (HFE-90), Office of Consumer Affairs, Food and Drug Administration, 5600 Fishers Lane, Rockville, MD 20857, rather than to the Hearing Clerk as prescribed in § 10.210 of the regulations (21 CFR 10.210). If you wish to submit an application or wish more information regarding the reimbursement program, please call Ronald Wylie at 301-443-2932.

FDA has established expedited procedures for review of any application for reimbursement for participation in the meetings announced in this notice. The Office of Consumer Affairs, FDA, will file any application for reimbursement for participation in the meetings announced in this notice in the docket for this notice.

Dated: August 6, 1980.

William F. Randolph,

Acting Associate Commissioner for Regulatory Affairs.

[FR Doc. 80-24405 Filed 8-14-80; 8:45 am]

BILLING CODE 4110-03-M

C. R. Bard, Inc.; Premarket Approval of USCI Gruntzig Dilaca™ Coronary Artery Balloon Dilatation Catheter

Correction

In FR Doc. 80-21465, appearing in the issue of Friday, July 18, 1980, on page 48254, make the following corrections:

(1) Correct the heading to read as set forth above;

(2) In the preamble, under the heading of "SUMMARY", the sixth line down is corrected to read: "USCI® Gruntzig Dilaca™";

(3) Also in the preamble, under "Supplementary Information", the fourth line down under this heading, correct "USCI®" to read "USCI®" and in the fifth line under the same heading correct "Gruntzig Dilaca" to read "Gruntzig Dilaca™"

BILLING CODE 1505-01-M

Public Health Service

Privacy Act of 1974; New Routine Uses to Notices of Systems of Records

AGENCY: Department of Health and Human Services, Public Health Service.

ACTION: Notification of proposal to add three (3) routine uses to each of three (3) systems of records which are maintained by the Center for Disease Control.

SUMMARY: In accordance with requirements of the Privacy Act, the Public Health Service (PHS) is publishing notice of a proposal to add three routine uses to each of three systems of records maintained by the Center for Disease Control's Bureau of Laboratories and Bureau of Epidemiology. PHS invites interested persons to submit comments on the proposed routine uses on or before September 15, 1980.

DATES: The Center for Disease Control will adopt the proposed routine uses without further notice unless PHS receives comments within the 30-day comment period which would result in a contrary determination.

ADDRESS: Comments should be addressed to: Director, Center for Disease Control, U.S. Public Health Service, Department of Health and Human Services, Room 2050, 1600 Clifton Road, Atlanta, Georgia 30333. Comments received will be available for inspection from 8:00 a.m.-4:30 p.m., Monday through Friday in Room B-68, Building 1, 1600 Clifton Road, Atlanta, Georgia.

FOR FURTHER INFORMATION CONTACT: Sara S. Owens, Privacy Act Coordinator, Center for Disease Control, 1600 Clifton Road, Room B-68, Atlanta, Georgia 30333, (404) 329-3121.

SUPPLEMENTARY INFORMATION: The Department of Health and Human Services, Center for Disease Control, proposes to add three routine uses to each of the following Privacy Act System Notices, as discussed below.

1. 09-20-0106 "Specimen Handling for Testing and Related Data" HHS/CDC/BL. The programs of the Bureau of Laboratories are established in part to provide laboratory services to assist in the diagnosis and control of diseases. The Bureau provides reference and typing center services, as related to clinical laboratory procedures, for national and international organizations. The Bureau processes reference diagnostic specimens from throughout the nation and the world, and makes approximately 1.8 million different determinations on these specimens. Results of these tests and related data comprise a major system of records within the CDC. The Center contemplates contracting for computer services to enhance the automated system currently used for this system of records. There are also plans to award a contract to evaluate the effectiveness of the reference diagnostic services. In addition, research conducted under contract will include collection of data from individuals who participate in various studies designed to evaluate the effectiveness of preventive and curative health measures, including the evaluation of immunization projects.

2. 09-20-0107 "Dengue and Schistosomiasis Research Studies" HHS/CDC/BL. The Bureau of Laboratories conducts epidemiologic studies for the evaluation of control measures for tropical diseases such as dengue and schistosomiasis. The collection of specimens and data from study participants will be performed under contract during some of the studies. Laboratory services related to these diseases are, to a large extent, provided by the CDC San Juan Laboratories in Puerto Rico. The Bureau plans to award a contract to assess the quality and effectiveness of these laboratory services. In addition, the Bureau intends to obtain contractor services for the development of software programs to be used on computers at the CDC San Juan Laboratories to monitor the effects of dengue and schistosomiasis control programs. To perform the keyboarding and programming services, the contractor will have access to a duplicate tape of each of the disease data files.

3. 09-20-0136 "Epidemiologic Studies and Surveillance of Disease Problems" HHS/CDC/BE. The Bureau of Epidemiology conducts a variety of research relating to various diseases and other health problems. Patient care patterns, disease managment and duration of disease are potentially high risk factors which routinely require thorough investigation and analysis. The

Bureau plans to award a contract for the purpose of collecting data on prior care patterns and disease status of selected groups of patients in order to develop risk profiles of persons for whom preventive activities may be targeted. The contractor will collect and analyze data pertaining to individual patients after developing and field testing the data forms. The Bureau also plans to award a contract to assess the effectiveness and quality of its epidemiology program activities, including the disease reporting mechanmisms and data processing operations.

The three systems of records discussed above are used by epidemiologists and researchers in determining epidemic causes, family groupings of diseases, and geographical locations of specific diseases. Laboratory data are used in part to determine the drug resistance of specific organisms. Further, the collection of individual case histories, including epidemiological, medical, and laboratory information is essential in virtually all epidemic investigations. These data serve as the basis for analyses that lead to understanding the etiology of disease occurrence and subsequent prevention and control. The contract proposals discussed above are compatible with such purposes in that they provide needed services in support of the research efforts and disease prevention and control activities.

The Privacy Act of 1974 allows the disclosure of information without the consent of the individual for "routine uses", that is, disclosure for purposes which are compatible with the purposes for which the data are collected. Currently, the "routine uses" sections of the three Privacy Act systems of records do not contain provisions for disclosing individually identifiable data to contractors for the kinds of services discussed above. Accordingly, CDC proposes to add to each of the three systems the following routine uses:

A record may be disclosed for a research purpose, when the Department:

(a) Has determined that the use or disclosure does not violate legal or policy limitations under which the record was provided, collected, or obtained;

(b) Has determined that the research purpose (1) cannot be reasonably accomplished unless the record is provided in individually identifiable form, and (2) warrants the risk to the privacy of the individual that additional exposure of the record might bring;

(c) Has required the recipient to—(1) establish reasonable administrative, technical, and physical safeguards to prevent unauthorized use or disclosure of the record, and (2) remove or destroy the information that identifies the individual at the earliest time at which removal or destruction can be accomplished consistent with the purpose of the research project, unless the recipient has presented adequate justification of a research or health nature for retaining such information, and (3) make no further use or disclosure of the record except—(A) in emergency circumstances affecting the health or safety of any individual, (B) for use in another research project, under these same conditions, and with written authorization of the Department, (C) for disclosure to a properly identified person for the purpose of an audit related to the research project, if information that would enable research subjects to be identified is removed or destroyed at the earliest opportunity consistent with the purpose of the audit, or (D) when required by law;

(d) Has secured a written statement attesting to the recipient's understanding of, and willingness to abide by these provisions.

"To individuals and organizations deemed qualified by the Secretary to carry out quality assessment, medical audits or utilization review."

"The Department contemplates that it will contract with a private firm for the purposes of collating, analyzing, aggregating, or otherwise refining records in this system. Relevant records will be disclosed to such a contractor. The contractor shall be required to maintain Privacy Act safeguards with respect to such records."

Each contractor is required to assure that each of its employees knows the prescribed rules of conduct and is aware that he/she can be subject to criminal penalties for violations of the Privacy Act. In conformance with Part 6, ADP Systems Security, of the Department ADP Systems Manual, the computerized records must be safeguarded to ensure the security and confidentiality of the personal data. Similarly, the contractor must apply appropriate physical and administrative safeguards to protect manual files in accord with the agency's safeguarding standards.

The three system notices to which these proposed routine uses would apply are republished in their entirety below to include both the routine uses and a statement under "System Location" to provide for the location of records at contractor sites. These notices will be further updated to reflect the Department's new name, and to incorporate other minor changes, at the time of the 1980 annual publication of all of the Department's Privacy Act system notices.

Dated: August 7, 1980.

Jack N. Markowitz,

Acting Director, Office of Management.

09-20-0106

SYSTEM NAME:

Specimen Handling for Testing and Related Data—HEW/CDC/BL.

SECURITY CLASSIFICATION:

None.

SYSTEM LOCATION:

Bureau of Laboratories, Scientific Services, Bldg. 4—Room 35, CDC, Atlanta, GA 30333.

Hepatitis Laboratories Division, Room 123, 4402 North 7th St., Phoenix, Ariz. 85014.

A list of current contractors is available by writing to the System Manager listed below.

CATEGORIES OF INDIVIDUALS COVERED BY THE SYSTEM:

Patients whose specimens have been submitted to CDC for testing.

CATEGORIES OF RECORDS IN THE SYSTEM:

Results of diagnostic tests—microbiology, clinical chemistry, hematology and pathology.

AUTHORITY FOR MAINTENANCE OF THE SYSTEM:

Public Health Service Act, Section 301 (42 U.S.C. 241).

ROUTINE USES OF RECORDS MAINTAINED IN THE SYSTEM, INCLUDING CATEGORIES OF USERS AND THE PURPOSES OF SUCH USES:

Records may be disclosed to Health Departments and other public health or cooperating medical authorities.

Disclosure may be made to a congressional office from the record of an individual in response to an inquiry from the congressional office made at the request of the individual.

Disclosure may be made to the Department of Justice or other appropriate Federal agencies in defending claims against the United States when the claim is based upon an individual's mental or physical condition and is alleged to have arisen because of activities of the Public Health Service in connection with such individual. (Departmental Regulations (45 CFR, part 5b) Appendix B, Item 100.)

In the event of litigation where one of the parties is (a) the Department, any component of the Department, or any employee of the Department in his or her official capacity; (b) the United States where the Department determines that the claim, if successful, is likely to

directly affect the operations of the Department or any of its components; or (c) any Department employee in his or her individual capacity where the Justice Department has agreed to represent such employee, the Department may disclose such records as it deems desirable or necessary to the Department of Justice to enable that Department to effectively represent such party, provided such disclosure is compatible with the purpose for which the records were collected.

A record may be disclosed for a research purpose, when the Department (a) has determined that the use or disclosure does not violate legal or policy limitations under which the record was provided, collected, or obtained; (b) has determined that the research purpose (1) cannot be reasonably accomplished unless the record is provided in individually identifiable form and (2) warrants the risk to the privacy of the individual that additional exposure of the record might bring; (c) has required the recipient to—(1) establish reasonable administrative, technical, and physical safeguards to prevent unauthorized use or disclosure of the record, and (2) remove or destroy the information that identifies the individual at the earliest time at which removal or destruction can be accomplished consistent with the purpose of the research project, unless the recipient has presented adequate justification of a research or health nature for retaining such information, and (3) make no further use or disclosure of the record except—(A) in emergency circumstances affecting the health or safety of any individual, (B) for use in another research project, under these same conditions, and with written authorization of the Department, (C) for disclosure to a properly identified person for the purpose of an audit related to the research project, if information that would enable research subjects to be identified is removed or destroyed at the earliest opportunity consistent with the purpose of the audit, or (D) when required by law; (d) has secured a written statement attesting to the recipient's understanding of, and willingness to abide by these provisions.

To individuals and organizations deemed qualified by the Secretary to carry out quality assessment, medical audits, or utilization review.

The Department contemplates that it will contract with a private firm for the purposes of collating, analyzing, aggregating, or otherwise refining records in this system. Relevant records will be disclosed to such a contractor. The contractor shall be required to maintain Privacy Act safeguards with respect to such records.

POLICIES AND PRACTICES FOR STORING, RETRIEVING, ACCESSING, RETAINING, AND DISPOSING OF RECORDS IN THE SYSTEM:

STORAGE:

Original Form—file folders; microfilm copies—computer storage.

RETRIEVABILITY:

Test results returned to submitter. Used between specialty units for research purposes; and for epidemiological investigations for epidemic causes, prevention, family groupings of diseases, and geographical location of specific diseases; also, used by epidemiologists and researchers in determining drug resistance of specific organisms. Retrievable by: name or designated number furnished by the submitter, CDC identifying number, microfilm number.

SAFEGUARDS:

Restrictive use of the terminal; without knowledge of computer access codes, no one can obtain specific patient information. Microfilm is stored in locked cabinet. For computerized records, safeguards, established in accordance with HEW/ADP System Security Manual, Part 6, are used.

RETENTION AND DISPOSAL:

Number years held at CDC: 5. How destroyed: Shredded or burned.

SYSTEM MANAGER(S) AND ADDRESS:

Director, Bureau of Laboratories, Bldg. 1—Room 1007, CDC, Atlanta, GA 30333, and Director, Hepatitis Laboratories Division, Room 123, 4402 North 7th Street, Phoenix, Ariz. 85014.

NOTIFICATION PROCEDURE:

To determine if a file exists, write the Director, Bureau of Laboratories, Building 1, Room 1007, Center for Disease Control, Atlanta, Georgia 30333, and provide the following information: (1) approximate date(s) and place of treatment or questionnaire administration, (2) name of study, if known; (3) an individual who requests notification of or access to a medical record shall, at the time the request is made, designate a responsible representative in writing who will be willing to review the record and inform the subject individual of its contents at the representative's discretion. A parent or guardian who requests notification of or access to a child's/incompetent person's record shall designate a family physician or other health professional (other than a family member) to whom the record, if any, will be sent. The parent or guardian must verify relationship to the child/incompetent person as well as his/her own identity. (These notification and access procedures are requirements of the Department Regulations, 45 CFR, and Part 5b.6.)

RECORD ACCESS PROCEDURES:

Same as notification procedures. Requesters should also reasonably specify the record contents being sought. (These access procedures are in accordance with Department Regulations (45 CFR, Part 5b.5(a)(2).)

CONTESTING RECORD PROCEDURES:

Write the Privacy Act Coordinator, Management Analysis Office, Center for Disease Control, Atlanta, Georgia 30333. Reasonably identify the record and specify the information to be contested. This procedure is in accordance with Department Regulations, (45 CFR, Part 5b.7).

RECORD SOURCE CATEGORIES:

Approved Public Health Laboratories, Federal Medical Facilities, some private physicians.

SYSTEMS EXEMPTED FROM CERTAIN PROVISIONS OF THE ACT:

None.

09-20-0107

SYSTEM NAME:

Dengue and Schistosomiasis Research Studies—HEW/CDC/BL.

SECURITY CLASSIFICATION:

None.

SYSTEM LOCATION:

San Juan Laboratories, San Juan, Puerto Rico.

A list of current contractors is available by writing to the System Manager listed below.

CATEGORIES OF INDIVIDUALS COVERED BY THE SYSTEM:

Individuals living in Puerto Rico.

CATEGORIES OF RECORDS IN THE SYSTEM:

Demographic and health behavioral information on individuals in study community.

AUTHORITY FOR MAINTENANCE OF THE SYSTEM:

Public Health Service Act, Section 301 (42 U.S.C. 241).

ROUTINE USES OF RECORDS MAINTAINED IN THE SYSTEM, INCLUDING CATEGORIES OF USERS AND THE PURPOSES OF SUCH USES:

Information transferred to Puerto Rico Health Department.

Disclosure may be made to a congressional office from the record of an individual in response to an inquiry

from the congressional office made at the request of the individual.

Diclosure may be made to the Department of Justice or other appropriate Federal agencies in defending claims against the United States when the claim is based upon an individual's mental or physical condition and is alleged to have arisen because of activities of the Public Health Service in connection with such individual. (Departmental Regulations (45 CFR, part 5b), Appendix B, Item 100.)

In the event of litigation where one of the parties is (a) the Department, any component of the Department, or any employee of the Department in his or her official capacity; (b) the United States where the Department determines that the claim, if successful, is likely to directly affect the operations of the Department or any of its components; or (c) any Department employee in his or her individual capacity where the Justice Department has agreed to represent such employee, the Department may disclose such records as it deems desirable or necessary to the Department of Justice to enable that Department to effectively represent such party, provided such disclosure is compatible with the purpose for which the records were collected.

A record may be disclosed for a research purpose, when the Department (a) has determined that the use or disclosure does not violate legal or policy limitations under which the record was provided, collected, or obtained; (b) has determined that the research purpose (1) cannot be reasonably accomplished unless the record is provided in individually identifiable form, and (2) warrants the risk to the privacy of the individual that additional exposure of the record might bring: (c) has required the recipient to—(1) establish reasonable administrative, technical, and physical safeguards to prevent unauthorized use or disclosure of the record, and (2) remove or destroy the information that identifies the individual at the earliest time at which removal or destruction can be accomplished consistent with the purpose of the research project, unless the recipient has presented adequate justification of a research or health nature for retaining such information, and (3) make no further use or disclosure of the record except—(A) in emergency circumstances affecting the health or safety of any individual, (B) for use in another research project, under these same condition, and with written authorization of the Department, (C) for disclosure to a properly identified person for the purpose of an audit related to the research project, if information that would enable research subjects to be identified is removed or destroyed at the earliest opportunity consistent with the purpose of the audit, or (D) when required by law; (d) has secured a written statement attesting to the recipient's understanding of, and willingness to abide by these provisions.

To individuals and organizations deemed qualified by the Secretary to carry out quality assessment, medical audits, or utilization review.

The Department contemplates that it will contract with a private firm for the purposes of collating, analyzing, aggregating, or otherwise refining records in this system. Relevant records will be disclosed to such a contractor. The contractor shall be required to maintain Privacy Act safeguards with respect to such records.

POLICIES AND PRACTICES FOR STORING, RETRIEVING, ACCESSING, RETAINING, AND DISPOSING OF RECORDS IN THE SYSTEM:

STORAGE:

IBM punch cards and computer listings.

RETRIEVABILITY:

Epidemiological studies for the evaluation of schistosomiasis and dengue control. Special statistical analyses are performed on information. Retrievable by code number.

SAFEGUARDS:

Under lock and key—only researchers have availability. For computerized records, safeguards, established in accordance with HEW/ADP System Security Manual, Part 6, are used.

RETENTION AND DISPOSAL:

Number years heald at CDC: 10 years.

SYSTEM MANAGER(S) AND ADDRESS:

Director, Bureau of Laboratories, Building 1, Room 1007, San Juan Laboratories, San Juan, Puerto Rico.

NOTIFICATION PROCEDURE:

To determine if a file exists, write the Director, Bureau of Laboratories, Building 1, Room 1007, Center for Diease Control, Atlanta, Georgia 30333, and provide the following information: (1) approximate date(s) and place of treatment or questionnaire administration, (2) name of study; if known; (3) an individual who requests notification of or access to a medical record shall, at the time the request is made, designate a responsible a responsible representative in writing who will be willing to review the record and inform the subject individual of its contents at the representative's discretion. A parent or guardian who requests notification of or access to a child's/incompetent person's record shall designate a family physician or other health professional (other than a family member) to whom the record, if any, will be sent. The parent or guardian must verify relationship to the child/incompetent person as well as his/her own identity. (These notifications and access procedures are requirements of the Department Regulations, 45 CFR, Part 5b.

RECORD ACCESS PROCEDURES:

Same as notification procedures. Requesters should also reasonably specify the record contents being sought. (These access procedures are in accordance with Department Regulations (45 CFR, Part 5b.5(a)(2)).

CONTESTING RECORD PROCEDURES:

Write the Privacy Act Coordinator, Management Analysis Office, Center for Disease Control, Atlanta, Georgia 30333. Reasonably identify the record and specify the information to be contested. This procedure is in accordance with Department Regulations, (45 CFR, Part 5b.7).

RECORD SOURCE CATEGORIES:

Directly from participants in the studies.

SYSTEMS EXEMPTED FROM CERTAIN PROVISIONS OF THE ACT:

None.

09-20-0136

SYSTEM NAME:

Epidemiologic Studies and Surveillance of Disease Problems—HEW/CDC/BE.

SECURITY CLASSIFICATION:

None.

SYSTEM LOCATION:

Bureau of Epidemiology, Center for Disease Control, Bldg. 1, Room 5009, Atlanta, Georgia 30333.

A list of current contractors is available by writing to the System Manager listed below.

CATEGORIES OF INDIVIDUALS COVERED BY THE SYSTEM:

Individuals with reported diseases and other preventable conditions of public health significance; also included are control group participants.

CATEGORIES OF RECORDS IN THE SYSTEM:

Case reports, line listings, hand sort cards.

AUTHORITY FOR MAINTENANCE OF THE SYSTEM:

Public Health Service Act, Sec. 301 (42 U.S.C. 241).

ROUTINE USES OF RECORDS MAINTAINED IN THE SYSTEM, INCLUDING CATEGORIES OF USERS AND THE PURPOSES OF SUCH USES:

Records may be disclosed to Health Departments and other public health or cooperating medical authorities.

Disclosure may be made to a congressional office from the record of an individual in response to an inquiry from the congressional office made at the request of the individual.

Disclosure may be made to the Department of Justice or other appropriate Federal agencies in defending claims against the United States when the claim is based upon an individual's mental or physical condition and is alleged to have arisen because of activities of the Public Health Service in connection with such individual. (Departmental Regulations (45 CFR, part 5b) Appendix B, Item 100.)

In the event of litigation where one of the parties is (a) the Department, any component of the Department, or any employee of the Department in his or her official capacity; (b) the United States where the Department determines that the claim, if successful, is likely to directly affect the operations of the Department or any of its components; or (c) any Department employee in his or her individual capacity where the Justice Department has agreed to represent such employee, the Department may disclose such records as it deems desirable or necessary to the Department of Justice to enable that Department to effectively represent such party, provided such disclosure is compatible with the purpose for which the records were collected.

A record may be disclosed for a research purpose, when the Department (a) has determined that the use or disclosure does not violate legal or policy limitations under which the record was provided, collected, or obtained; (b) has determined that the research purpose (1) cannot be reasonably accomplished unless the record is provided in individually identifiable form, and (2) warrants the risk to the privacy of the individual that additional exposure of the record might bring; (c) has required the recipient to—(1) establish reasonable administrative, technical, and physical safeguards to prevent unauthorized use or disclosure of the record, and (2) remove or destroy the information that identifies the individual at the earliest time at which removal or destruction can be accomplished consistent with the purpose of the research project, unless the recipient has presented adequate justification of a research or health nature for retaining such information, and (3) make no further use or disclosure of the record except—(A) in emergency circumstances affecting the health or safety of any individual, (B) for use in another research project, under these same conditions, and with written authorization of the Department, (C) for disclosure to a properly identified person for the purpose of an audit related to the research project, if information that would enable research subjects to be identified is removed or destroyed at the earliest opportunity consistent with the purpose of the audit, or (D) when required by law; (d) has secured a written statement attesting to the recipient's understanding of, and willingness to abide by these provisions.

To individuals and organizations deemed qualified by the Secretary to carry out quality assessment, medical audits, or utilization review.

The Department contemplates that it will contract with a private firm for the purposes of collating, analyzing, aggregating, or otherwise refining records in this system. Relevant records will be disclosed to such a contractor. The contractor shall be required to maintain Privacy Act safeguards with respect to such records.

POLICIES AND PRACTICES FOR STORING, RETRIEVING, ACCESSING, RETAINING, AND DISPOSING OF RECORDS IN THE SYSTEM:

STORAGE:

Computer tapes or file folders, lockable cabinets.

RETRIEVABILITY:

By name of individual identification number.

SAFEGUARDS:

Personnel screening during working hours; secured building with guard after working hours.

RETENTION AND DISPOSAL:

Record copy of study reports maintained from three to ten years in accordance with retention schedules. Source documents for computer disposed of when no longer needed by program official. Personal identifiers may be deleted from records when no longer needed in the study as determined by the system manager, and as provided in the signed consent form, as appropriate.

SYSTEM MANAGER(S) AND ADDRESS:

Director, Bureau of Epidemiology, Center for Disease Control, Bldg. 1—Room 5009, Atlanta, Georgia 30333.

NOTIFICATION PROCEDURE:

To determine if a file exists, write the Director, Bureau of Epidemiology, Building 1, Room 5009, Center for Disease Control, Atlanta, Georgia 30333, and provide the following information: (1) approximate date(s) and place of treatment or questionnaire administration; (2) name of study if known; (3) an individual who requests notification of or access to a medical record shall, at the time the request is made, designate a responsible representative in writing who will be willing to review the record and inform the subject individual of its contents at the representative's discretion. A parent or guardian who requests notification of or access to a child's incompetent persons record shall designate a family physician or other health professional (other than a family member) to whom the record, if any, will be sent. The parent or guardian must verify relationship to the child/incompetent person as well as his/her own identity. (These notification and access procedures are requirements of the Department regulations, 45 CFR, Part 5b.6.)

RECORD ACCESS PROCEDURES:

Same as notification procedures. Requesters should also reasonably specify the record contents being sought. (These access procedures are in accordance with Department Regulations (45 CFR, Section 5b.5(a)(2)).

CONTESTING RECORD PROCEDURES:

Contact the official at the address specified under notification procedures above, and reasonably identify the record and specify the information to be contested. (These procedures are in accordance with Department Regulations (45 CFR, Section 5b.7).

RECORD SOURCE CATEGORIES:

Individuals, private physicians, State and local health departments, and other health providers.

SYSTEMS EXEMPTED FROM CERTAIN PROVISIONS OF THE ACT:

None.

[FR Doc. 80-24891 Filed 8-14-80; 8:45 am]
BILLING CODE 4110-86-M

DEPARTMENT OF THE INTERIOR

Bureau of Land Management

Coos Bay District Multiple Use Advisory Council; Meeting

Notice is hereby given, in accordance with Pub. L. 94-579, and 43 CFR Part 1780, that a meeting of the Coos Bay District Multiple Use Advisory Council will be held on Thursday, September 18, 1980 at 9 a.m. at the Neighborhood Facility Building, 250 Hull Street, Coos Bay, Oregon.

Agenda for the meeting will include:

1. Introduction and biographical sketch of members.
2. Discussion of the function of the council.
3. Briefing and discussion of Coos Bay District programs.
4. Development of a 10-year Timber Management Plan to include, but not be limited to discussion of 9 alternatives analyzed in the South Coast and Curry Sustained Yield Units Timber Management Environmental Impact Statement.
5. Discuss potential for committees.
6. Election of officers.
7. Arrangements for next meeting.

This meeting will acquaint the Council with the Coos Bay District so that it can offer advice and make recommendations to the District Manager relative to Coos Bay District programs.

The meeting is open to the public. Interested persons may make oral statements to the Council between 11:30 a.m. and 12:00 noon, or file written statements for the Council's consideration. Anyone wishing to make an oral statement musty notify the District Manager at the Coos Bay District Office, 333 South Fourth, Coos Bay, OR 97420 by September 11, 1980. Depending upon the number of persons wishing to make an oral statement, a per person time limit may be established.

Summary minutes of the meeting will be maintained in the District Office and will be available for public inspection and reproduction during regular business hours within 30 days following the meeting.

Dated: August 8, 1980.

Paul M. Sanger,

District Manager.

[FR Doc. 80-24755 Filed 8-14-80; 8:45 am]
BILLING CODE 4310-84-M

Arizona Off-Road Vehicle Designations Designations; Designation Order Az-050-8001

AGENCY: Bureau of Land Management.

ACTION: Notice of off-road vehicle designation decisions.

DECISION: Portions of the public lands in southern Mohave County and northern Yuma County administered by the Yuma District are designated for: intensive use, limited use, and as closed to off-road motorized vehicle use. These designations are made in accordance with the authority and requirements of Executive Orders 11644 and 11989 and regulations contained in 43 CFR Part 8340.

The affected lands include 529,760 acres in the Havasu Resource Area south of Interstate 40 and 222,000 acres in the northern portion of the Yuma Resource Area. These designations are based on land use decisions made in the 1975 Management Framework Plans for the Havasu and La Paz Planning Units, the Parker Strip Activity Plan and the Buckskin Mountains-Cactus Plain Habitat Management Plan. In addition to the public participation and review involved in the formulation of these plans, public participation was solicited through two public mailings and four open houses, specifically on the Off-Road Vehicle (ORV) Designations. Comments from the public were important in developing these final ORV designations.

These designations are effective as of this date. Under 43 CFR 4.21, an appeal of this designation may be filed within 30 days with the Interior Board of Land Appeals.

Summation.

A. *Intensive Use Areas.* Areas which are designated as intensive use areas comprise approximately 640 acres. These areas were chosen after inventories revealed relatively low resource values.

B. *Limited Designation.*

1. *Travel Limited to Existing Roads and Trails.*

This designation was chosen to give maximum resource protection on approximately 481,855 acres while allowing most existing uses to continue with a minimum of controls.

2. *Travel Limited to Designated Roads and Trails.*

This designation has been adopted for the Parker Strip (HRA 27) and the Blythe Intaglio Area (YRA 3) which include approximately 13,985 acres. It is slightly more restrictive, since certain roads within the boundaries are closed to motorized vehicles.

3. Travel Limited to Existing Roads and Trails With Seasonal Closure

This hybrid designation is designed to give protection to desert bighorn sheep during the critical lambing season. In these areas (approximately 21,760 acres) vehicular travel is limited to existing roads and trails except during the period of January 15th to April 15th when the area is closed to all motorized vehicles.

C. *Closed.* Approximately 11,520 acres are proposed for vehicular closure.

SPECIFIC AREAS

HRA-1 Communication Site. Closed.
HRA-2 Communication Site. Closed.
HRA-4 Interstate 40 South. Existing Roads and Trails.
HRA-5 Buck Mountains. Existing Roads and Trails.
HRA-6A Northern Mohave Mountains-Needles Peak. Existing Roads and Trails with Seasonal Closure.
HRA-6B Central Mohave Mountains. Existing Roads and Trails with Seasonal Closure.
HRA-6C Southern Mohave Mountains. Existing Roads and Trails Aubrey Hills. Closed.
HRA-8A Standard Wash-Mohave Springs Mesa. Existing Roads and Trails.
HRA-8B Lake Havasu City Perimeter. Existing Roads and Trails.
HRA-9 Bill Williams Mountains. Existing Roads and Trails with Seasonal Closure.
HRA-10 Bill Williams River North. Existing Roads and Trails.
HRA-11 Black Peak Consolidated Sand Dunes Research Natural Area. Closed.
HRA-12 Planet Peak. Existing Roads and Trails.
HRA-13 Bouse Consolidated Sand Dunes Research Natural Area. Closed.
HRA-14 Midway South. Existing Roads and Trails.
HRA-15 Cactus Plain. Existing Roads and Trails.
HRA-16 Buckskin Mountains. Existing Roads and Trails.
HRA-17 The Mesa North. Existing Roads and Trails with Seasonal Closure.
HRA-18 Giers Mountain. Existing Roads and Trails with Seasonal Closure.
HRA-19 Mesa South-Mineral Hill. Existing Roads and Trails.
HRA-21 Eastern Buckskin Mountains. Existing Roads and Trails.
HRA-22 Whipple Mountains. Existing Roads and Trails.
HRA-23 Gibraltar Mountain. Existing Roads and Trails with Seasonal Closure.
HRA-24 Copper Basin Wash Sand Dunes. Intensive Use Area.
HRA-25 Chemehuevi Wash. Existing Roads and Trails.
HRA-26 Topock Gorge Vicinity. Existing Roads and Trails.
HRA-27 Parker Strip, AZ & CA. Designated Roads and Trails.
HRA-28 Parker 400 Course. Limited to Participants of Permitted Events on Day of Events.
HRA-29 Bowmans Wash. Intensive Use Area.
YRA-1 North La Posa Plain. Existing Roads and Trails.
YRA-1A North La Posa Plain Environmental Study Area. Closed.
YRA-1B North La Posa Plain. Closed due to unexploded military ordnance.
YRA-2 South La Posa Plain. Existing Roads and Trails
YRA-2A South La Posa Plain. Closed due to unexploded military ordnance.
YRA-3 Blythe Intaglio Area. Designated Roads and Trails.
YRA-3A Blythe Intaglio Site. Closed.
YRA-4 Ripley Intaglio Area. Existing Roads and Trails.
YRA-4A Ripley Intaglio Site. Closed.

These designations are effective as of this date and will remain in effect until rescinded or modified by the authorized officer. An environmental assessment describing the impact of these

designations is available for inspection at the offices listed below.

ADDRESS: For further information about these designations, contact any of the following Bureau of Land Management Offices:

District Manager, Yuma District Office, P.O. Box 5680, 2450 4th Avenue, Yuma, AZ 85364, (602) 726-6300.

Area Manager, Yuma Resource Area, P.O. Box 5680, 2450 4th Avenue, Yuma, AZ 85364, (602) 726-6300.

Area Manager, Havasu Resource Area, P.O. Box 685, 2049 Swanson Avenue, Lake Havasu City, AZ 86403, (602) 855-8017.

Dated: August 7, 1980.

H. M. Bruce,

District Manager.

[FR Doc. 80-24702 Filed 8-14-80; 8:45 am]

BILLING CODE 4310-84-M

[Serial No. I-15354A]

Idaho; Proposed Withdrawal Continuation

August 8, 1980.

The Bureau of Land Management has filed a statement of justification for continuation of an existing Public Water Reserve Withdrawal. The Bureau desires to continue the withdrawal in its entirety for a period of 20 years. The continuation would be made pursuant to the authority contained in Section 204(L) of the Federal Land Policy and Management Act of October 21, 1976 (90 Stat. 2754; 43 U.S.C. 1714). The following described land is included in the proposed continuation:

Boise Meridian, Idaho

(I-15354A)
Public Water Reserve 107
Secretarial Order of Interpretation No. 169
T. 14 S., R. 26 E.
Sec. 18, NW¼NE¼, NE¼NW¼.

The area described aggregates 80 acres in Cassia County, Idaho

The land is segregated from operation of the public land laws, including location for non-metalliferous minerals under the mining laws. It is otherwise open to the mining and mineral leasing laws. No change in the segregative effect of the withdrawal or use of the lands is proposed.

Pursuant to Section 204(h) of the Federal Land Policy and Management Act of 1976, notice is hereby given than an opportunity for a public hearing is afforded in connection with the proposed withdrawal continuation. All interested persons who desire to be heard on the proposal must submit a written request for a hearing to the undersigned officer within 30 days of the date of publication of this notice. Upon determination by the State Director, Bureau of Land Management, that a public hearing will be held, a notice will be published in the Federal Register giving the time and place of such hearing. In lieu of or in addition to attendance at a scheduled public hearing, written comments or objections to the proposed withdrawal continuation may be filed with the undersigned officer on or before September 15, 1980.

The authorized officer of the Bureau of Land Management will undertake such investigations as are necessary to determine the existing and potential demand for the land and its resources. He will review the withdrawal justification to insure that continuation would be consistent with the statutory objectives of the programs for which the land is dedicated, the area involved is the minimum essential to meet the desired needs, the maximum concurrent utilization of the land is provided for, and an agreement is reached on the concurrent management of the land and its resources. He will also prepare a report for consideration by the Secretary of the Interior, the President and Congress, who will determine whether or not the withdrawal will be continued and, if so, for how long. The final determination on continuation of the withdrawal will be published in the Federal Register. The existing withdrawal will continue until such final determination is made.

All communication in connection with this sponsored withdrawal continuation should be addressed to the Chief, Branch of Lands and Minerals Operations, Bureau of Land Management, Federal Building, Box 042, 550 West Fort Street, Boise, Idaho 83724.

Vincent S. Strobel,

Chief, Branch of L&M Operations.

[FR Doc. 80-24729 Filed 8-14-80; 8:45 am]

BILLING CODE 4310-84-M

Montrose District Grazing Advisory Board; Meeting

Notice is hereby given in accordance with Pub. L. 92-463 that a meeting of the Montrose District Grazing Advisory Board will be held on September 16 and 17, 1980. On September 16, the meeting will convene at 10:00 a.m. in the conference room of the Bureau of Land Management Office, Highway 550 South, Montrose, Colorado. On September 17, the meeting will convene at 8:00 a.m. at the same place.

On September 17 attendees will travel to the Log Hill Allotment within the Uncompahgre Basin Resource Area to view the results of the 1979 prescribed burn and seeding treatment.

The agenda for the meeting will include: (1) undate on the implementation of the Range Management Program in the Uncompahgre Basin Resource Area; (2) update on the status of the Gunnison Basin Grazing Environmental Statement; (3) a status report on the soil-vegetative inventory method and planning schedule in the San Juan Resource Area; (4) a review of range improvement projects being constructed in FY 80 and proposed for development during FY 81; (5) the expenditures of advisory board funds for range improvements; (6) a discussion of the Public Rangelands Improvement Act Stewardship Program and suggestions on implementation within the District; and (7) arrangements for the next meeting.

The meeting is open to the public. Interested persons may make oral statements to the board between 10:00 and 11:00 a.m. on September 16, 1980, or file written statements for the board's consideration. Anyone wishing to make an oral statement must notify the District Manager, Bureau of Land Management, P.O. Box 1269, Montrose, Colorado 81401, by September 12, 1980. Depending on the number of persons wishing to make oral statements, a per person time limit may be established by the District Manager.

Persons desiring to make the tour on September 17 should furnish their own transportation.

Summary minutes of the board meeting will be maintained in the District Office and be available for public inspection and reproductions (during regular business hours) within 30 days following the meeting.

R. S. Schmidt,

Acting District Manager.

[FR Doc. 80-24701 Filed 8-14-80; 8:45 am]

BILLING CODE 4310-84-M

Sacramento River Land Management Plan; Off-Road Vehicle Use Designations

Notice is hereby given that the following ORV use designations are being made to protect the natural and cultural values of lands in and adjacent to the Sacramento River, known as Jellys Ferry, Paynes Creek, Chinese Rapids, Todd Island and Foster Island parcels.

The public has been involved in the bureau's planning process and in the development of the Sacramento River Plan which provided for the initial decisions on this designation. These designations will apply to off-road

vehicles as defined in 43 CFR 8340.0-5A. This action is in compliance with 43 CFR 8342.2 designation procedures for off-road vehicles and the Sacramento River Land Management Plan, Management Guideline 7 (off-road vehicle use will be either prohibited or limited to designated roads and trails).

These designations are effective August 15, 1980. The areas involved are signed and maps showing the designation areas are available at the Redding District Office of the Bureau of Land Management, 355 Hemsted Drive, Redding, California 96002.

The following areas shall be designated as "limited areas and trails": "Limited areas and trails" are designated areas and trails where the use of off-road vehicles is subject to restrictions deemed appropriate by the authorized officer. Restrictions may limit the number or types of vehicles allowed, dates and times of use, and similar matters. Limited areas and trails may be designated for special or intensive use, including, but not limited to, organized events, and may be subject to but not limited to, rules set forth at 43 CFR Subpart 8341.2.

A. *Jellys Ferry.*—This 65 acre parcel is situated on the east bank of the Sacramento River at the crossing of the Jellys Ferry Road Bridge. Vehicle use will be limited to the surfaced access road and parking areas. The legal description is the S½ of all public lands within Section 34, with approximately .32 miles of river frontage in T. 29 N., R. 3 W., Mount Diablo Meridian.

B. *Paynes Creek-Sacramento River.*—This 2,227-acre parcel is located about one mile northeast of Bend, which is six miles northeast of Red Bluff. The legal description encompasses all public lands within Sections 10, 11, 12, 13, 14, 15, and 22, T. 28 N., R. 3 W., M.D.M. The vehicle use will be limited to routes which are identified on maps and on the ground with posts or other delineation systems.

The following areas shall be dsignated as "closed areas and trails": "Closed areas and trails" are designated areas and trails where the use of off-road vehicles is permanently or temporarily prohibited.

A. *Chinese Rapids.*—This nine-acre parcel is located about one mile to the east of Bend, at river mile 254 on the Sacramento River in Section 28, Lot 8, T. 28 N., R. 3W., M.D.M.

B. *Todd Island.*—This 236-acre parcel is located in the Sacramento River at river mile 236.8, all public lands within Sections 7 and 18, T. 26 N., R. 2 W., M.D.M., approximately 1½ miles southwet of Dairyville.

C. *Foster Island.*—This 210-acre parcel is located in the Sacramento River at river mile 210.4, all public lands within Sections 14 and 15, T. 23 N., R. 2 W., M.D.M., about 5½ miles east of the town of Kirkwood and six miles east of Interstate 5.

The public lands within the designated areas will remain open to other resource and recreation uses. Any person who violate or fails to comply with the vehicle closure is subject to arrest as prescribed in 43 CFR 8340.0-7. Penalties for violations may be a fine of not more than $1,000.00 or imprisonment for not longer than 12 months, or both.

Terry W. Woosley,

Acting District Manager.

[FR Doc. 80-24731 Filed 8-14-80; 8:45 am]

BILLING CODE 4310-84-M

Socorro District Grazing Advisory Board; Meeting

Notice is hereby given in accordance with Pub. L. 94-579 that a field tour for the Socorro District Grazing Advisory Board will be held on Thursday, September 11, 1980.

The tour will begin at 8:30 a.m from the Socorro District Office at 198 Neel Avenue NW, Socorro, New Mexico.

The tour will consist of an inspection of range improvements and sites for proposed improvements on several allotments in the Jornada Resource Area in eastern Socorro County. The group will eat lunch at noon on the west bank of the Rio Grande just east of San Antonio, New Mexico. The site is just to the north of Highway 380. Following lunch, the board will hold a short business meeting at the site to consider the following topics:

1. Discussion of Fiscal Year 1981 range improvement projects.

2. An update on the Section 8 consultations and the resulting range decisions in the East Socorro Area.

3. An update on the Stewardship Program.

4. Arrangements for the next meeting.

The tour is open to the public. Persons wishing to attend should provide their own transportation and a sack lunch.

Summary minutes of the business meeting will be maintained in the District Office and will be available for public inspection and reproduction during regular business hours within 30 days following the meeting.

Arlen P. Kennedy,

District Manager.

[FR Doc. 80-24730 Filed 8-14-80; 8:45 am]

BILLING CODE 4310-84-M

[INT FEIS-80-24]

Royal Gorge Grazing Management; Availability of Final Impact Statement

Pursuant to Section 102(2)(C) of the National Environmental Policy Act of 1969, the Department of the Interior has prepared an environmental impact statement on grazing management in the Royal Gorge Resource Area. The proposal includes implementing 76 new grazing plans or allotment management plans (AMPs) and continue present management on 1 AMP. Less intensive grazing management would be applied to 278 allotments and livestock grazing would be eliminated on 13 additional allotments.

The environmental impact statement analyzes the impacts that would result from management of livestock grazing and additional range improvement projects such as fences, livestock watering facilities, and vegetation treatment. The proposal is scheduled for implementation over a 5-year period.

Copies of the final or draft statement are available for inspection at the following locations:

Bureau of Land Management, Room 2063, Interior Building, 18th and C Streets, NW, Washington, D.C. 20240 (Phone: 202-343-6011).

Bureau of Land Management, Room 700, Colorado State Bank Building, 1600 Broadway, Denver, Colorado 80202 (Phone: 303-837-4481).

Bureau of Land Management, Canon City District Office, 3080 East Main, Canon City, Colorado 81212 (Phone: 303-275-7494).

Bureau of Land Management, Royal Gorge Resource Area, 9th and Royal Gorge Blvd., Canon City, Colorado 81212 (Phone: 303-275-7578).

Public Libraries

Canon City Public Library, 5th and Macon, Canon City, Colorado 81212.

Conservation Library, Denver Public Library, 1357 Broadway, Denver, Colorado 80206.

County Courthouses

Fremont County, Canon City, Colorado 81212.

Chaffee County, Salida, Colorado 81201.

Single copies of the final statement can be obtained from the District Manager, Canon City District Office; or the State Director, Colorado State Office, at the address listed above.

Written comments on the adequacy of the final environmental impact statement should be submitted by September 29, 1980, to the State Director, Bureau of Land Management, 1600 Broadway, Denver, Colorado 80202.

Dated: August 7, 1980.

Marlyn V. Jones,

Acting State Director.

[FR Doc. 80-24692 Filed 8-14-80; 8:45 am]

BILLING CODE 4310-84-M

Office of the Secretary

Proposed Allocations of Water From the Central Arizona Project to Indian Tribes; Public Hearings

AGENCY: Office of the Secretary, Interior.

ACTION: Notice of public hearings.

SUMMARY: Pursuant to the announcement made by the Department of the Interior in the Federal Register of August 8, 1980 (45 FR 52938), the Department will hold public hearings to receive comments and additional information from the State of Arizona, Indian tribes and the general public on the proposals of the Secretary of the Interior to allocate 309,810 acre-feet of water from the Central Arizona Project (CAP) to Indian tribes.

Along with other conditions, this allocation would be made with the stipulation that in times of project water supply shortages, the Indian CAP supply would be reduced on a proportional basis with the municipal and industrial water supplied by the project. The action proposed would adjust allocations made previously by the Department.

As part of these proposed allocations, the Department also has considered the possible use of wastewater effluent to substitute for a portion of the Indian CAP allocation, the relationship of Indian CAP supplies to the tribes' finally adjudicated *Winters* rights, and the non-Indian CAP water supply.

PURPOSE: The public hearings are intended to provide potential users of project water and the general public in the project area with opportunities to examine fully the proposed allocations and to comment on them. They also will provide the Secretary with additional information on which to base his final allocations.

DATES: The public hearings will be held from 1-5 p.m. and 7-9 p.m. on these dates and at these locations:

City	Hearing date	Request to testify	Location
Tucson	Sept. 16, 1980.	Sept. 12, 1980.	Community Center, 260 South Church Ave.
Phoenix	Sept. 17, 1980.	Sept. 15, 1980.	Adams Hotel, Hopi Rooms A & B, Central Ave. & Adams.
Casa Grande	Sept. 18, 1980.	Sept. 15, 1980.	City Council Chambers, 300 East Fourth St.

All persons wishing to present oral testimony must submit a request to June Gibbons, Arizona Project Office, Water and Power Resources Service, 201 North Central Avenue, Phoenix, Arizona 85073; Telephone (602) 261-4901, prior to the date noted above. Oral presentations will be limited to 15 minutes, and all witnesses are urged to submit written copies of their testimony for the record. Lengthy presentations should be summarized orally and the full text submitted for the record.

ADDRESSES: The administrative record relied upon in making these proposed allocations will be available for inspection at the following locations:

Arizona Projects Office, Water and Power Resources Service, Suite 2200, Valley Center, 201 North Central Avenue, Phoenix, Arizona 85073 (602) 261-3106

Bureau of Indian Affairs, Phoenix Area Office, 3030 North Central Avenue, Phoenix, Arizona 85012 (602) 261-2305

Office of the Field Solicitor, U.S. Department of the Interior, Suite 2080, Valley Center, 201 North Central Avenue, Phoenix, Arizona 85073 (602) 261-4756.

This administrative record can be inspected by the public during regular business hours, and arrangements can be made to have specified portions copied upon payment of reasonable charges.

SUPPLEMENTAL INFORMATION: Interested persons may also submit written comments, suggestions or objections regarding these proposed allocations to the Associate Solicitor for Energy and Resources, U.S. Department of the Interior, Washington, D.C. 20240. All relevant comments and materials received before October 7, 1980, will be considered.

FOR FURTHER INFORMATION CONTACT:

Mary Reardon, Office of the Assistant Secretary—Land and Water Resources, Room 6619, U.S. Department of the Interior, Washington, D.C. 20240 (202) 343-6306

June Gibbons, Arizona Projects Office, Water and Power Resources Service, Suite 2200, Valley Center, 201 North Central Avenue, Phoenix, Arizona 85073 (602) 261-4901

Dated: August 11, 1980.

Clyde O. Martz,

Acting Secretary.

[FR Doc. 80-24695 Filed 8-14-80; 8:45 am]

BILLING CODE 4310-10-M

Water and Power Resources Service

Draft Environmental Statement on the Proposed Reauthorization of the Central Valley Project, California; Public Hearings

Pursuant to section 102(2)(C) of the National Environmental Policy Act of 1969, the Department of the Interior has prepared a draft environmental statement for the proposed "Reauthorization of the Central Valley Project and the Coordinated Operating Agreement for the Central Valley Project and the State Water Project in California." The statement (INT DES 80-47) was transmitted to the Environmental Protection Agency on July 29, 1980.

The statement also deals with the proposed Coordinated Operating Agreement for the Central Valley Project (CVP) and the State Water Project (SWP). It discusses the projected environmental impacts of (1) alternatives uses of the uncontracted water supplies of the presently authorized CVP, (2) the execution of a CVP-SWP coordinated operating agreement, (3) the construction of certain works related to fish and wildlife and to Delta water quality, and (4) reauthorization of the CVP for Sacramento-San Joaquin River Delta Water quality, and fish and wildlife purposes.

Water and Power Resources Service will hold public hearings at the following locations and times to receive comments on the draft statement from interested individuals, organizations, and agencies:

1. In Bakerfield, California, on Wednesday, September 17, 1980, starting at 7 p.m. in Banquet Rooms A and B, Ramada Inn, at 2620 Pierce Road.
2. In Fresno, California, on Thrusday, September 18, 1980, starting at 7 p.m. in the Apollo Room, Hacienda Inn, at 2550 West Clinton Avenue.
3. In Stockton, California, on Monday, September 22, 1980, starting at 7 p.m. in Room B. Holiday Inn, at 221 North Center Street.

4. In Corcord, California, on Wednesday, September 24, 1980, starting at 7 p.m. in the Board Room of the Contra Costa County Water District at 1331 Concord Avenue.

5. In Redding, California, on Thursday, September 25, 1980, starting at 7 p.m. in the Sierra Room Red Lion Inn, at 1830 Hilltop Drive.

6. In Sacramento, California, on Monday, September 29, 1980, in the Maui/Kona Rooms, Holiday Inn North, at 1900 Canterbury Road.

Each hearing will continue until all persons desiring to comment have been heard.

Individuals and representatives of organizations desiring to present their views at the hearing should contact the Regional Environmental Quality Officer, Water and Power Resources Service, 2800 Cottage Way, Sacramento, California 95825 (telephone (916) 484-4792).

Requests for scheduling of oral presentations will be accepted until 4 p.m., Sepetmber 12, 1980. Requests to speak can also be made at the registration desk at the hearings. Insofar as practicable, speakers will be scheduled according to the time preferences indicated in their requests.

The time permitted for oral presentations at the hearing may be limited to 10 minutes per speaker, depending on the number of presentations scheduled. Speakers will not be permitted to trade or consolidate their scheduled times to make longer individual presentations. However, the person presiding at the hearing may allow additional oral comments by anyone after all scheduled speakers have been heard. Written statements by persons who desire to supplement their oral presentations and by those unable to attend the public hearing may be submitted to the Regional Environmental Quality Officer (address given above) through October 10, 1980, for inclusion in the hearing record. Please label comments submitted by mail as "Public Hearing" comments on the draft statement.

Copies of the draft statement are available for public examination at the Mid-Pacific Regional Office of the Water and Power Resources Service, 2800 Cottage Way, Sacramento, California 95825. Single copies of the statement may be obtained without charge by writing to the Regional Director, Water and Power Resources Service, at the address given above for the Mid-Pacific Regional Office.

Dated: August 12, 1980.

Clifford I. Barrett,

Assistnat Commissioner of Water and Power Resources Service.

[FR Doc. 80-24754 Filed 8-14-80; 8:45 am]

BILLING CODE 4310-09-M

INTERSTATE COMMERCE COMMISSION

Permanent Authority Decisions; Decision-Notice

Correction

In FR Doc. 80-19816 appearing at page 45382 in the issue for Thursday, July 3, 1980, make the following correction:

On page 45400, in the middle column, in the paragraph "MC 138322 (Sub-25F)" filed by "BHY Trucking, Inc.", in the 11th line, the state abbreviation "MN" should be "NM".

BILLING CODE 1505-01-M

[Docket No. AB-1 (Sub-No. 91F)]

Chicago & North Western Transportation Co.—Abandonment Between Hopkins and Norwood, Minn.; Notice of Findings

Notice is hereby given pursuant to 49 U.S.C. 10903 that by a Certificate and Decision decided July 22, 1980, a finding, which is administratively final, was made by the Commission, Review Board Number 5, stating that, the public convenience and necessity permit the abandonment by the Chicago and North Western Transportation Company of a line of railroad known as the Hopkins-Norwood line extending from railroad milepost 19.6 near Hopkins to railroad milepost 51.3 near Norwood, a distance of 31.7 miles, in Hennepin and Carver Counties, MN, subject to the conditions for the protection of employees discussed in *Oregon Short Line R. Co.-Abandonment Goshen*, 360 I.C.C. 91 (1979), and further that applicant shall keep intact all of the right-of-way underlying the track, including all the bridges and culverts for a period of 120 days from July 22, 1980, to permit any state or local government agency or other interested party to negotiate the acquisition for public use of all or any portion of the right-of-way. A certificate of public convenience and necessity permitting abandonment was issued to Chicago and North Western Transportation Company. Since no investigation was instituted, the requirement of § 1121.38(a) of the Regulations that publication of notice of abandonment decisions in the Federal Register be made only after such a decision becomes administratively final was waived.

Upon receipt by the carrier of an actual offer or financial assistance, the carrier shall make available to the offeror the records, accounts, appraisals, working papers, and other documents used in preparing Exhibit I (§ 1121.45 of the Regulations). Such documents shall be made available during regular business hours at a time and place mutually agreeable to the parties.

The offer must be filed and served no later than 15 days after publication of this Notice. The offer, as filed, shall contain information required pursuant to Section 1121.38(b) (2) and (3) of the Regulations. If no such offer is received, the certificate of public convenience and necessity authorizing abandonment shall become effective September 29, 1980.

Agatha L. Mergenovich,

Secretary.

[FR Doc. 80-24804 Filed 8-14-80; 8:45 am]

BILLING CODE 7035-01-M

Decision-Notice

The following applications seek approval to consolidate, purchase, merge, lease operating rights and properties, or acquire control of motor carriers pursuant to 49 U.S.C. 11343 or 11344. Also, applications directly related to these motor finance applications (such as conversions, gateway eliminations, and securities issuances) may be involved.

The applications are governed by Special Rule 240 of the Commission's Rules of Practice (49 CFR § 1100.240). These rules provide, among other things, that opposition to the granting of an application must be filed with the Commission within 45 days after the date of notice of filing of the application is published in the Federal Register. Failure seasonably to oppose will be construed as a waiver of opposition and participation in the proceeding. Opposition under these rules should comply with Rule 240(c) of the Rules of Practice which requires that it set forth specifically the grounds upon which it is made, and specify with particularity the facts, matters and things relied upon, but shall not include issues or allegations phrased generally. Opposition not in reasonable compliance with the requirements of the rules may be rejected. The original and one copy of any protest shall be filed with the Commission, and a copy shall also be served upon applicant's representative or applicant if no representative is named. If the protest includes a request for oral hearing, the request shall meet the requirements of

Rule 240(c)(4) of the special rules and shall include the certification required.

Section 240(c) further provides, in part, that an applicant who does not intend timely to prosecute its application shall promptly request its dismissal.

Further processing steps will be by Commission notice or order which will be served on each party of record. *Broadening amendments will not be accepted after the date of this publication except for good cause shown.*

Any authority granted may reflect administratively acceptable restrictive amendments to the transaction proposed. Some of the applications may have been modified to conform with Commission policy.

We find with the exception of those applications involving impediments (e.g., jurisdictional problems, unresolved fitness questions, questions involving possible unlawful control, or improper divisions of operating rights) that each applicant has demonstrated, in accordance with the applicable provisions of 49 U.S.C. 11301, 11302, 11343, 11344, and 11349, and with the Commission's rules and regulations, that the proposed transaction should be authorized as stated below. Except where specifically noted this decision is neither a major Federal action significantly affecting the quality of the human environment nor does it appear to qualify as a major regulatory action under the Energy Policy and Conservation Act of 1975.

In the absence of legally sufficient protests as to the finance application *or* any application directly related thereto filed within 45 days of publication (or, if the application later becomes unopposed), appropriate authority will be issued to each applicant (except those with impediments) upon compliance with certain requirements which will be set forth in a notification of effectiveness of this decision-notice. To the extent that the authority sought below may duplicate an applicant's existing authority, the duplication shall not be construed as conferring more than a single operating right.

Applicant(s) must comply with all conditions set forth in the grant or grants of authority within the time period specified in the notice of effectiveness of this decision-notice, or the application of a non-complying applicant shall stand denied.

Dated: August 6, 1980.

By the Commission, Review Board Number 5, Members Krock, Taylor, and Williams.

MC-F 14446F, filed July 17, 1980.

NORTH & SOUTH LINES, INC. (North) (1610 South Main Street, Harrisonburg, VA 22801)—Control and Merger—HARTMANS, INCORPORATED (Hartmans) (833 Chicago Avenue, Harrisonburg, VA 22801).

Representatives: John R. Sims, Jr. and John L. Boyd, Jr., 915 Pennsylvania Bldg, 425 13th Street, N.W., Washington, DC 20004.

North seeks authority to acquire control of Hartmans and for merger of the operating rights and property into North for ownership, management, and operation. Robert E. Plecker who controls North through ownership of all of its capital stock, seeks to acquire control of Hartmans through this transaction.

The operating rights to be acquired by North are contained in Hartmans' certificates issued in MC-112696 and sub-numbers thereunder which authorize the transportation as follows: A. Regular routes, (1) *shoes, leather, rubber heels and soles, and supplies and equipment* used in a show factory, (a) between Harrisonburg, VA, and Boston, MA, and (b) between Gettysburg, PA, and Dillsburg, PA, (2) *leather,* from Luray, VA, and Winchester, VA, (3) *brooders and brooder supplies and air conditioning equipment,* from Harrisonburg, VA, to Brookline, MA, (4) *refrigerator show cases,* from Trenton, NJ, to Harrisonburg, VA, and (5) *general commodities,* usual exceptions, between Harrisonburg, VA, and Philadelphia, PA. B. Irregular routes, (1) *general commodities,* usual exceptions, from Baltimore, MD, to Harrisonburg, VA, (2) *burlap bags,* from Harrisonburg, VA, to Baltimore, MD, and Philadelphia, PA, (3) *petroleum products,* in containers, from Philadelphia, PA, to Staunton, Harrisonburg, Mount Jackson, and Winchester, VA (4) *empty petroleum products containers and used gasoline station equipment,* from Winchester, Mount Jackson, Harrisonburg, and Staunton, VA, to Philadelphia, PA, (5) *empty gas cylinders,* from Harrisonburg, VA, to Baltimore, MD, (6) *petroleum fuel oil,* in bulk, in tank vehicles, from Richmond, VA, to Franklin, WV, (7) *coal,* from Independence, Blaine, and Piedmont, WV, and Pottsville, PA, to Harrisonburg, VA, (8) *oil,* from Bayonne, NJ, to Waynesboro and Covington, VA, (9) *anti-freeze and alcohol,* from Carneys Point, NJ, to Waynesboro and Covington, VA, (10) *auto parts and acessories,* from Baltimore, MD, and Philadelphia and York, PA, to Waynesboro and Covington, VA, (11) *new furniture,* from Harrisonburg, VA, to points in VA, MD, PA, NY, and CT, (12) *linoleum and congoleum floor coverings and rugs,* from East Walpole, MA, to Alexandria, Danville, Kenbridge, Norfolk, Richmond, Roanoke, Lynchburg, Harrisonburg, and Petersburg, VA, Bluefield, Charleston, Huntington, and Logan, WV, and Johnson City and Bristol, TN, (13) *lumber,* from Rainelle, Erwin, and Cass, WV, to Harrisonburg, VA, (14) *mill machinery,* from New York, NY, and Paterson, NJ, and Philadelphia, PA, to Warwick, RI, and Waynesboro, VA, (15) *textile manufacturers' supplies, and mill machinery, and cotton piece goods, silk rayon, silk rayon piece goods, burlap, cotton bags, and bagging,* between Griffin, GA, and Waynesboro, VA, (16) *cotton piece goods, silk rayon, silk and rayon piece goods, rayon products, rayon cord, burlap, cotton bags, and bagging, textile manufacturers' supplies, and bagging,* (1) from Wayneboro, VA, to points in MA and RI, and (2) from West Warwick, RI, to Waynesboro, VA, (17) *twine,* in truckload lots, from Philadelphia, PA, to Harrisonburg, VA, (18) *firebrick and brick binder,* from Clearfield and Woodland, PA, to Harrisonburg, VA, (19) *farm machinery, paints, spray materials, and chemicals,* used in the manufacture of spray materials, from Baltimore, MD, to points in Rockingham County, VA, (20) *seed,* from points in Rockingham County, VA, to Baltimore, MD, (21) *fertilizer and fertlizer materials,* from Baltimore, MD, to Dayton, VA, (22) *such general merchandise as is dealt in by farmers' corporative stores,* from Baltimore, MD, to Harrisonburg, Elkton, Bridgewater and Timberville, VA, (23) *canned goods,* from Bridgewater, VA, to Baltimore, MD, Johnstown, and Philadelphia, PA, Charleston, Huntington, Mabscott, Logan and Bluefield, WV, points in VA and WV within 50 miles of Logan and Bluefield, and DC, (24) *canned fruits and vegetables,* (1) from Bridgewater, VA, to New York, NY, and (2) from Bridgwater, VA, to points in NC west of U.S. Hwy 301, east of U.S. Hwy 25, and those in SC west of U.S. Hwy 1, (25) *cream, condensed milk, and whole milk,* from Columbus and Orleans, IN, to Alexandria and Harrisonburg, VA, and DC, (26) *empty containers* for cream, condensed milk, and whole milk, from Alexandria and Harrisonburg, VA, and DC, to Columbus and Orleans, IN, (27) *hay and grain,* from Harrisonburg, VA, and points in VA within ten miles of Harrisonburg, to Leaksville, Reidsville, and Roxboro, NC, and points in NC within 25 miles of Reidsville and Roxboro, (28) *flour,* from Fort Defiance and Mount Crawford, VA, to points in that part of NC west of U.S. Hwy 301

and east of U.S. Hwy 25, and those in SC west of U.S. Hwy 1, (29) *cotton seed meal,* from Kershaw, SC, to Harrisonburg, Elkton, Bridewater, and Timberville, VA, (30) *corn meal,* from Lynwood, VA, to Birmingham, AL, (31) *eggs and poultry,* from Harrisonburg, VA, to DC, (32) *dressed poultry,* from Broadway and Harrisonburg, VA, to points in DE, MD, NJ, NY, PA, VA, MA, CT, RI, ME, VT, NH, and DC, (33) *brooders, poultry watering equipment, metal feeders, brooderette air conditioning units, venticones, and egg baskets,* from Harrisonburg, VA, to Henderson, TX, and points in AR, GA, and OK, (34) *brooders, brooder equipment and supplies,* from Harrisonburg, VA, to points in MD and PA, (35) *coops, boxes and crates,* (1) from Weyers Cave, VA, to points within two miles thereof, to points in NC, SC, and GA, and (2) from Weyers Cave, VA, and points within two miles thereof, to points in CT, MA, RI, OH, and IN, (36) *poultry house equipment,* from Harrisonburg, VA, to points in NY, CT, MA, and RI, (37) *leather,* (1) from Luray, VA, to Winchester, VA, and (2) from Luray, VA, to Worcester, Lynn, Haverhill, Marlboro, Brockton, Whitman, and North Abington, MA, (38) *shoes, leather, rubber heels and soles, and supplies and equipment* used in a shoe factory, (1) between Winchester, VA, Hagerstown, MD, and Gettysburg, Dillsburg, Lancaster, York, and Littletown, PA, on the one hand, and, on the other, Harrisonburg, VA, and Boston, MA, (2) from Harrisonburg, VA, and Boston, MA, to Worcester, Malden, and Athol, MA, New York, NY, Baltimore, MD, and Lynchburg, VA, (3) from Boston, MA, to East Berlin, PA, (4) (except commodities in bulk in tank vehicles), from Boston, MA, to Elizabethtown, PA, and (5) from Littlestown, PA, to Taneytown, MD, (39) *brooders, brooder supplies, and air-conditioning equipment,* from Harrisonburg, VA, to Brookline, MA, and points on Hwy 1 between Philadelphia, PA, and New Haven, CT (not including Philadelphia), points on U.S. Hwy 5 between New Haven, CT, and Springfield, MA, and points on U.S. Hwy 20 from Springfield, MA, to junction U.S. Hwy 20 and 9, and points on U.S. Hwy 9 from junction U.S. Hwy 9 and 20 to Brookline, MA, (40) *poultry growers' equipment,* from Harrisonburg, VA, to points in LA, TX, ME, FL, AL, and MS, (41) *frozen foods, poultry and poultry byproducts, in vehicles equipped* with temperature-control devices, from Harrisonburg, Timberville, and Winchester, VA, to points in AL, AR, CT, DE, GA, IL, IN, IA, KS, KY, LA, MD, MA, MI, MN, MS, MO, NE, NH, NJ, NY, NC, OH, OK, PA, RI, SC, TN, VT, VA, WV, WI, points in ME on and south of ME Hwy 25, including Portland, ME, and DC, (42) *unfinished shoes,* from Elizabethtown, PA, to Boston, MA, (43) *finished shoes,* from East Berlin, PA, to Gettysburg, PA, (44) *boxes,* from New Oxford, PA, to Bridgewater, Dayton, Harrisonburg, Hinton, and Timberville, VA, (44) *turkey rolls, and turkey rolls and dressed poultry* moving in mixed loads in the same vehicle at the same time, in vehicles equipped with mechanical refrigeration, from Bridgewater, VA, to points in AL, AR, CT, DE, GA, IL, IN, IA, KS, KY, LA, MD, MA, MI, MN, MS, MO, NE, NH, NJ, NY, NC, OH, OK, PA, RI, SC, TN, VT, WV, WI, points in that part of ME on and south of ME Hwy 25; and DC, (45) *shoes, leather, heels, soles, uppers and supplies and equipment* used in a shoe factory, (1) between Boston, ME, and the plant site of Gettysburg Shoe Co., in Camp Hill, PA, (2) betwen the plant site of Gettysburg Shoe Co., in Camp Hill, PA, and Dillsburg, PA, and (3) (except commodities in bulk) between Boston, MA, on the one hand, and, on the other, points in Lancaster County, PA (except Lancaster, PA), and points in Carroll, Washington, and Frederick Counties, MD, (46) *frozen foods,* (1) from Martinsburg, WV, to points in CT, DE, MD, MA, NH, NJ, NY, PA, RI, VT, VA, points in ME on and south of ME Hwy 25, including Portland, ME, and DC, restricted: shipments destined to points in GA, NC, and SC are limited to those originating at the plant site and warehouse of the Casco-Berkeley Corp., at Martinsburg, WV, (2) from the facilities of Kitchens of Sara Lee, Inc., at or near Deerfield, IL, to points in CT, DE, MA, MD, NJ, NY, PA, RI, VA, WV, and DC, restricted to the transportation of shipments originating at the above-described origins and destined to the above-described destinations, (3) from the facilities of Morton Food Division, Continental Baking Co., at Crozet, VA, to points in MD, KY, IN, MI, OH, WV, ME, NH, VT, WI, NY, IL, VA, MN, CT, DE, NJ, MA, PA, RI, and DC, restricted to the transportation of traffic originating at the above-named origin and destined to the indicated destination points, (47) *prepared flour mixes and frosting mixes,* from Chelsea, MI, to points in CT, ME, MD, MA, NH, RI, VA, and DC, (48) *prepared flour mixes and frosting mixes,* from Chelsea, MI, to points in NY, NJ, and PA, (49) *malt beverages,* from Pabst, Houston County, GA, to Lynchburg, VA, (50) *empty bottles, containers, kegs, pallets, and skids,* from Lynchburg, VA, to Pabst, Houston County, GA, (51) *shoes,* from Boston, MA, and Gettysburg, PA, to the facilities of Consolidated Shoe Company in Campbell County, VA, near Lynchburg, VA, (52) *plastic film,* in vehicles equipped with mechanical refrigeration, from Grottoes, VA, to points in CT, MD, MA, NJ, NY, PA, and RI, (53) *material, equipment, and supplies* (except commodities in bulk) used in processing poultry, from points in the United States in and east of FL, GA, TN, MO, IA, and WI, to the facilities of Shenandoah Valley Poultry Co., Inc., and Shen-Mar Food Products Corporation in Rockingham County, VA, (54) *foodstuffs* (except in bulk), from the facilities of Rich Products Corporation at or near Murfreesboro, TN, to points in DE, FL, GA, IL, IN, IA, KY, MD, MI, MN, NJ, NY, NC, OH, PA, SC, VA, WV, WI, and DC, restricted to traffic originating at the named origin and destined to the destinations indicated above, (55) *frozen foodstuffs,* from Seabrook, NJ, to points in IL, IN, KS, MI, MO, PA, OH, and VA, (56) *malt beverages and wine,* from Pabst, GA, and Newark and Secaucus, NJ, to points in Rockingham County, VA, and MC-112696 (Sub-No. E1), to transport *frozen foods,* (1) from Baltimore, MD, to points in AL, AR, GA, IL, IN, IA, KS, KY, LA, MI, MN, MS, MO, NE, OH, OK, SC, TN, and WI, and (2) from Martinsburg, WV, to points in AL, AR, GA, IL, IN, IA, KS, KY, LA, MI, MN, MS, MO, NE, NC, OH, OK, SC, TN, and WI.

North operates as a motor common carrier in interstate or foreign commerce pursuant to certificate No. MC 28038 and sub-numbers thereunder.

Impediment: Authorization and approval of this transaction is conditioned upon the prior receipt by the Commission of an affidavit from Robert E. Plecker, the sole stockholder of North, stating that he is the person in control of applicant and that he joins in this application. (Hearing site: Washington, DC.)

Note.—An application for temporary authority has been filed.

MC-F 14450F, filed July 25, 1980.

RAY BELLEW & SONS, INC. (Bellew) (7810 Almeda-Genoa Rd., Houston, TX 77075)—Purchase (portion)—HOUSTON FREIGHTWAYS, INC. (Houston) (9010 Clinton Drive, P.O. Box 607, Houston, TX 77547).

Representative: J. G. Dail, Jr., P.O. Box LL, McLean, VA 22101.

Bellew seeks authority to purchase a portion of the interstate operating rights of Houston. Ray Bellew and Helen L. Bellew, who control, Bellew, seek authority to acquire control of said rights through the transaction.

Bellew is purchasing that portion of the operating rights contained in Houston's certificate in MC-143209, which authorizes the transportation as a motor common carrier, over irregular routes, as follows: (1) *Machinery, equipment, materials, and supplies* used in, or in connection with, the discovery, development, production, refining, manufacture, processing, storage, transmission, and distribution of natural gas and petroleum and their products and by-products, and *machinery, materials, equipment and supplies* used in or in connection with, the construction, operation, repair, servicing, maintenance, and dismantling of pipelines, including the stringing and picking up thereof; (2) *Machinery and equipment* used in, or in connection with, the discovery, development, production, refining, manufacture, processing, storage, transmission, and distribution of sulpur and its products, and *materials and supplies* (not including sulphur) used in, or in connection with, the discovery, development, production, refining, manufacture, processing, storage, transmission, and distribution of sulphur and its products, restricted to the transportation of shipments of materials and supplies moving to or from exploration, drilling, production, job, construction, plant (including refining, manufacturing, and processing plant) sites or storage sites; and (3) *Machinery, equipment, materials, and supplies* used in, or in connection with, the drilling of water wells: (a) Between points in TX within 150 miles of Palestine, TX, including Palestine, TX. (b) Between points in TX within 150 miles of Monahans, TX, including Monahans, TX. (c) Between points in TX within 200 miles of Sundown, TX, including Sundown, TX. (d) Betweeen points in the TX territories specified in the three paragraphs next above, on the one hand, and, on the other, points in LA, NM, and AR. (e) Between points in KS and OK, on the one hand, and, on the other, points in TX. Restriction: The authority described immediately above is not to be utilized in connection with other authority described herein for the performance of through operations between points in OK, on the one hand, and, on the other, points in AR. (f) Between points in KS and OK. (g) Between points in KS and OK, and that part of NM bounded by a line beginning at the NM-TX State line, near Bronco, TX, and extending along U.S. Highway 380 through Gladiola, NM, to junction NM Highway 18, thence along NM Highway 18 through Lovington, NM, to Hobbs, NM, thence along U.S. Highway 62 to Carlsbad, NM, thence along U.S. Highway 285 to the NM-TX State line, and thence along the NM-TX State line to point of beginning, including points on the indicated portions of the highway specified. The commodities described in (1), above, between Kansas City, MO, on the one hand, and, on the other, points in OK, TX, and that part of NM described in (g) above. The commodities described in (3), above, between points in OK and AR, and between Kansas City, MO, on the one hand, and, on the other, points in KS, OK, TX, and that part of NM described in (g), above.

Houston is retaining that portion of its lead certificate which authorizes the transportation of *iron and steel articles*, as described in Appendix V to the report in Descriptions in Motor Carrier Certificates, 61 M.C.C. 209 and 766, from Houston, TX, to points in TX.

Impediment: The authority being sold duplicates to a certain extent the authority beging retained by Houston *Iron and Steel articles* from Houston, TX, falls within 150 miles of Palestine, TX.

Bellew presently holds no authority from the Interstate Commerce Commission. It is commonly controlled with Ray Bellew, Inc., which holds authority under MC 52727. (Hearing site: Houston, TX.)

Note.—An application for temporary authority has been filed.

Agatha L. Mergenovich,

Secretary.

[FR Doc. 80-24797 Filed 8-14-80; 8:45 am]

BILLING CODE 7035-01-M

[Forty-Third Revised Exemption No. 129]

Exemption Under Provision of Rule 19 of the Mandatory Car Service Rules Ordered in Ex Parte No. 241

It appearing, That the railroads named herein own numerous forty-foot plain boxcars; that under present conditions, there is virtually no demand for these cars on the lines of the car owners; that return of these cars to the car owners would result in their being stored idle on these lines; that such cars can be used by other carriers for transporting traffic offered for shipments to points remote from the car owners; and that compliance with Car Service Rules 1 and 2 prevents such use of plain boxcars owned by the railroads listed herein, resulting in unnecessary loss of utilization of such cars.

It is ordered, That, pursuant to the authority vested in me by Car Service Rule 19, plain boxcars described in the Official Railway Equipment Register, ICC-RER 6410-E, issued by W. J. Trezise, or successive issues thereof, as having mechanical designation "XM," with inside length 44-ft. 6-in. or less, regardless of door width and bearing reporting marks assigned to the railroads named below, shall be exempt from provisions of Car Service Rules 1(a), 2(a), and 2(b).

Atlanta & Saint Andrews Bay Railway Company Reporting Marks: ASAB
Boston and Maine Corporation Reporting Marks: BM
Chicago, Milwaukee, St. Paul and Pacific Railroad Company Reporting Marks: MILW
Chicago, West Pullman & Southern Railroad Company Reporting Marks: CWP
Columbus and Greenville Railway Company Reporting Marks: CAGY
Delaware and Hudson Railway Company Reporting Marks: DH
Green Mountain Railroad Corporation Reporting Marks: GMRC
Illinois Terminal Railroad Company Reporting Marks: ITC
Louisville, New Albany & Corydon Railroad Company Reporting Marks: LNAC
Manufacturers Railway Company Reporting Marks: MRS
Maryland Midland Railway Company Reporting Marks: MMID
Missouri-Kansas-Texas Railroad Company Reporting Marks: MKT
Missouri Pacific Railroad Company Reporting Marks: CEI-MI-MP-TR
New Hope and Ivyland Railroad Company Reporting Marks: NHIR
North Stratford Railroad Corporation Reporting Marks: NSRC
St. Louis-San Francisco Railway Company Reporting Marks: SLSF*
St. Louis Southwestern Railway Company Reporting Marks: SSW
Southern Pacific Transportation Company Reporting Marks: SP
Southern Railway System Reporting Marks: SOU-CG-NS-SA

Effective August 1, 1980, and continuing in effect until 11:59 p.m., August 24, 1980.

Issued at Washington, D.C., July 30, 1980.

Interstate Commerce Commission.

Joel E. Burns,

Agent.

[FR Doc. 80-24790 Filed 8-14-80; 8:45 am]

BILLING CODE 7035-01-M

[Twelfth Revised Exemption No. 141]

Exemption Under Provision of Rule 19 of the Mandatory Car Service Rules Ordered in Ex Parte No. 241

To All Railroads:

It appearing, That the railroads named herein own numerous plain gondola cars less than 61-ft.; that under present conditions, there are surpluses of these cars on their lines; that return of these cars to the car owners would

*Addition

result in their being stored idle; that such cars can be used by other carriers for transporting traffic offered for shipments to points remote from the car owners; and that compliance with Car Service Rules 1 and 2 prevents such use of these cars, resulting in unnecessary loss of utilization of such cars.

It is ordered, That, pursuant to the authority vested in me by Car Service Rule 19, plain gondola cars, less than 61-ft. in length, described in the Official Railway Equipment Register, ICC-RER No. 6410-E, issued by W. J. Trezise, or successive issues thereof, as having mechanical designation "GB," and which bear the reporting marks listed below, may be used without regard to the requirements of Car Service Rules 1 and 2.

Aberdeen and Rockfish Railroad Company Reporting Marks: AR
Atlantic and Western Railway Company Reporting Marks: ATW
Bessemer and Lake Erie Railroad Company Reporting Marks: BLE
Chicago, West Pullman & Southern Railroad Company Reporting Marks: CWP
Columbus and Greenville Railway Company Reporting Marks: CAGY
Consolidated Rail Corporation Reporting Marks: BCK-CNJ-CR-DLW-EL-ERIE-LV-NH-NYC-PE-PAE-PC-PCA-PRR-RDG-TOC-RR
East St. Louis Junction Railroad Company Reporting Marks: ESLJ
Illinois Terminal Railroad Company Reporting Marks: ITC
Lousiana Midland Railway Company Reporting Marks: LOAM
Maryland and Delaware Railroad Company Reporting Marks: MDDE
Octoraro Railway, Inc. Reporting Marks: OCTR
The Pittsburgh and Lake Erie Railroad Company Reporting Marks: PLE
Southern Railway Company Reporting Marks: SOU
St. Louis-San Francisco Railway Company Reporting Marks: SLSF*
Wisconsin and Southern Railroad Company Reporting Marks: WSOR*
Upper Merion and Plymouth Railroad Company Reporting Marks: UMP

Effective August 1, 1980, and continuing in effect until 11:59 p.m., August 24, 1980.

Issued at Washington, D.C., July 30, 1980.

Interstate Commerce Commission.

Joel E. Burns,

Agent.

[FR Doc. 80-24791 Filed 8-14-80; 8:45 am]

BILLING CODE 7035-01-M

*Additions.

[Notice No. 191]

Assignment of Hearings

August 7, 1980.

Cases assigned for hearing, postponement, cancellation or oral argument appear below and will be published only once. This list contains prospective assignments only and does not include cases previously assigned hearing dates. The hearings will be on the issues as presently reflected in the Official Docket of the Commission. An attempt will be made to pubish notices of cancellation of hearings as promptly as possible, but interested parties should take appropriate steps to insure that they are notified of cancellation or postponements of hearings in which they are interested.

MC 148418 (Sub-1F), Mountain High Shipping, Inc., now assigned for hearing on September 3, 1980, at Denver, CO in the Division 2, Court of Appeals 1927 Stout Street.

MC 61592 (Sub-465F), Jenkins Truck Line, Inc., now assigned for hearing on September 16, 1980, at Chicago, IL, in Room 280, 219 S. Dearborn Street, Everett McKinley Dirksen Bldg.

MC 35358 (Sub-45F), Berger Transfer & Storage, Inc., now assigned for hearing on September 17, 1980, at Chicago, IL, in Room 1221, Everett McKinley Dirksen Bldg.

MC 144330 (Sub-70F), Utah Carriers, Inc., now assigned for hearing on September 10, 1980, at Division 2, Court of Appeals, 1927 Stout Street, Denver, CO.

MC 95876 (Sub-291F), Anderson Trucking Service, Inc., now assigned for hearing on September 22, 1980, at Chicago, IL, in Room 204A, 219 S. Dearborn St., Everett McKinley Dirksen Bldg.

MC 147167F, T. C. Spires, Inc., now assigned for hearing on September 24, 1980, at Cincinnati, OH, in Room No. 50071, 5th Floor, 550 Main Street, Federal Building.

MC 102616 (Sub-1007F), Coastal Tank Lines, Inc., now assigned for hearing on September 24, 1980, in Room 204A, 219 S. Dearborn St., Everett McKinley Dirksen Bldg., and September 25-26, 1980, at Chicago, IL, in Room No. 280, 219 S. Dearborn St., Everett McKinley Dirksen Bldg.

MC 133541 (Sub-8F), McKibben Motor Service, Inc., now assigned for hearing on September 29, 1980, at Cincinnati, OH, in Room No. 9017, Federal Building, 550 Main Street.

MC 119441 (Sub-50F), Baker Hi-way Express, Inc., now assigned for hearing on October 1, 1980, at Cincinnati, OH, in Room No. 9017, Federal Building, 550 Main Steet, and October 2-3, 1980, in Room No. 8017, Federal Building, 550 Main Street.

MC 124151 (Sub-13F), Vanguard Transportation, Inc., now being assigned for hearing on September 10, 1980, (1 day), at New York, N.Y., location of hearing room will be designated later.

MC 143775 (Sub-72F), Paul Yates, Inc., assigned for hearing on September 25, 1980, is cancelled, the hearing remains as assigned September 30, 1980 (2 days), at Los Angeles, CA, location of hearing room will be by subsequent notice.

MC 35628 (Sub-429F), Interstate Motor Freight System, now assigned for hearing on September 15, 1980, at Pittsburgh, PA, is cancelled and reassigned for Prehearing Conference on Spetember 22, 1980 (1 week), at the Offices of the Interstate Commerce Commission, Washington, D.C.

MC 10343 (Sub-37F), Churchill Truck Lines, Inc., now being assigned for continued hearing on September 8, 1980 (3 days), at Dallas, TX; September 11, 1980 (2 days), at Fort Smith, AR; September 15, 1980 (3 days), at Little Rock, AR; September 18, 1980 (2 days), at Memphis, TN; September 22, 1980 (3 days), at St. Louis, MO; September 25, 1980 (2 days), at Kansas City, MO, and November 17, 1980 (3 days), at the Offices of the Interstate Commerce Commission, Washington, DC.

MC 145459 (Sub-9F), Thermo Transport, Inc., now assigned for hearing on September 3, 1980, at (1 day), at Boston, MA, in Room No. 501, 150 Causeway.

MC 140629 (Sub-313F), Cargo, Inc., now being assigned for hearing on September 4, 1980 (2 days), at Boston, MA in Room No. 501, 150 Causeway.

MC 96727 (Sub-2F), R.V.J., Inc., now assigned for hearing on September 8, 1980 (1 week), at Boston, MA, in Room No. 501, 150 Causeway.

MC 85811 (Sub-12F), Amsco Transportation, Inc., now assigned for hearing on September 18, 1980, at Kansas City, MO, is postponed to September 29, 1980 (2 days), at Kansas City, MO, location of hearing room will be designated later.

MC 730 (Sub-446F), Pacific Intermountain Express, Company, now being assigned for hearing on September 17, 1980 (3 days), at Albuquerque, NM, location of hearing room will be designated later.

MC 143402 (Sub-2F), John Hensal Trucking, Inc., now being assigned for hearing on September 22, 1980 (5 days), at Tulsa, OK, location of hearing room will be designated later.

MC 30319 (Sub-151F), Southern Pacific Transport Company of Texas and Louisiana, now being assigned for continued hearing on September 29, 1980 (10 days), and October 10, 1980, at Fort Smith, AR, location of hearing room will be designated later.

FD 29254, Somerset Railroad Corporation, construction and operation of a line of railroad in Niagara County, NY, now being assigned for hearing on October 15, 1980 (8 days), at Lockport, NY, location of hearing room will be designated later.

FD 29187 (Sub-1F), Providence and Worchester Company—Control—of Vermont & Massachusetts Railroad Company, now being assigned for hearing on October 1, 1980 (1 day) at Boston, MA, location of hearing room will be designated later.

MC 126473 (Sub-41F), Harold Dickey Transport, Inc., now being assigned for hearing on September 17, 1980 (3 days), at Chicago, IL, in Room 1221, Everett McKinley Dirksen Bldg.

MC 35358 (Sub-45F), Berger Transfer & Storage, Inc., is transferred to Modified Procedure.

MC 29079 (Sub-147F), Brada Miller Freight System, Inc., now being assigned for hearing on October 29, 1980, at the Office of the Interstate Commerce Commission, at Washington, D.C.

MC 117940 (Sub-348F), Nationwide Carriers, Inc., now being assigned for hearing on September 25, 1980 (2 days), at Los Angeles, CA, location of hearing room will be designated later.

MC 117940 (Sub-348F), Nationwide Carriers, Inc., now being assigned for hearing on September 25, 1980 (2 days), at Los Angeles, CA, location of hearing room will be designated later.

MC 133315 (Sub-5F), Asbury System, now assigned for hearing on September 29, 1980 (1 day), at Los Angeles, CA, at the Los Angeles County Courthouse, 111 North Hill Street.

Note.—Report to Room 203 for hearing room assignment.

MC 14236F, Graves Truck Line, Inc.—purchase—Stewart Motor Freight, Inc., now assigned for hearing on September 16, 1980 (9 days), at Salina, KS, location in a hearing room to be later designated.

MC 53965 (Sub-168F), Graves Truck Line, Inc., now being assigned for hearing on September 16, 1980 (9 days), at Salina, KS, in a hearing room to be later designated.

No. MC 53965 (Sub-No. 156F), Graves Truck Line, Inc., now assigned for hearing on September 16, 1980 (9 days), at Salina, KS, in a hearing room to be later designated.

MC 124078 (Sub-975F), Scherman Trucking Co., now assigned for hearing on September 9, 1980 (1 day), at New Orleans, LA., is transferred to Modified Procedure.

MC 125433 (Sub-281F), F-B Truck Line Company, application is dismissed.

MC 114274 (Sub-71F), Vitalis Truck Lines, Inc., application is dismissed.

MC 52861 (Sub-73F), Wills Trucking, Inc., is transferred to Modified Procedure.

MC 119974 (Sub-82F), L. C. L. Transit Company, now assigned for hearing on September 15, 1980 (1 week), at Chicago, IL, will be held in Room 350, Everett McKinley Dirksen Building, 219 South Dearborn Street.

MC 119700 (Sub-55F), Steel Haulers, Inc., now assigned for hearing on July 28, 1980 at Kansas City, MO, is canceled and application is dismissed.

MC 133019 (Sub-2F), Triangle Transportation, Inc., application is dismissed.

MC 140829 (Sub-326F), Cargo, Inc., application is dismissed.

MC 148009 (Sub-1F), Manhattan Collision Specialists, Inc., d.b.a. Manhattan Ave., now assigned for hearing on September 11, 1980, at New York, NY, is transferred to Modified Procedure.

MC 38481 (Sub-19F), Farruggio's and Philadelphia Auto Express, Inc., is transferred to Modified Procedure.

MC 124679 (Sub-105F), C. R. England and Sons, Inc., is transferred to Modified Procedure.

MC 140829 (Sub-343F), Cargo, Inc., application is dismissed.

MC 140829 (Sub-292F), Cargo, Inc., application is dismissed.

MC 146078 (Sub-9F), Cal-Ark, Inc., application is dismissed.

MC 119176 (Sub-22F), The Squaw Transit Company, application is dismissed.

MC 143059 (Sub-96F), Mercer Transportation Company, application is dismissed.

MC-C-10564, Hudson Transit Lines, Inc. v. Peter Pan Bus Lines, Inc., now assigned for hearing on September 11, 1980 (2 days), at New York, NY, in a hearing room to be later designated.

No. 37186F, Alaska Building Maintenance v. Sea-Land Services, Inc., now assigned for Prehearing Conference on July 29, 1980, at Anchorage, Alaska, is postponed indefinitely.

No. 37186F, Alaska Building Maintenance v. Sea-Land Services, Inc., now assigned for hearing on July 30, 1980, at Anchorage, Alaska, is postponed indefinitely.

MC 7698 (Sub-15F), Fowler & Williams, Inc., is transferred to Modified Procedure.

No. 37338, South Carolina Public Service Authority v. Clinchfield Railroad Company, et al., now assigned for hearing on August 26, 1980, at the Offices of the Interstate Commerce Commission, Washington, D.C.

I&S M-30261, Increased Commuter Fares, De Camp Bus Lines, July 1980, now assigned for hearing on September 9, 1980 (4 days), at New York, NY, in a hearing room to be later designated.

MC 96992 (Sub-17F), Highway Pipeline Trucking Co., now assigned for hearing on September 3, 1980 (3 days), at Houston, TX, in a hearing room to be later designated.

MC 123272 (Sub-37F), Fast Freight, Inc., now assigned for hearing on September 3, 1980, at Chicago, IL, is transferred to Modified Procedure.

MC 105269 (Sub-84F), Graff Trucking Company, Inc., is transferred to Modified Procedure.

MC 143739 (Sub-33F), Shurson Trucking Co., Inc., now assigned for hearing on September 10, 1980, at Kansas City, MO, is canceled and application dismissed.

MC 147422F, Jeffrey M. Kornacker, d.b.a. K Transport Co., now assigned for hearing on September 4, 1980 (2 days), at Chicago, IL, will be held in Room No. 1669, Everett McKinley Dirksen Building, 219 S. Dearborn Street.

MC 143059 (Sub-95F), Mercer Transportation Co., now assigned for hearing on September 8, 1980 (2 days), at Chicago, IL, will be held in Room 3619, 226 South Dearborn Street.

MC 143059 (Sub-108F), Mercer Transportation Co., now assigned for hearing on September 10, 1980 (3 days), at Chicago, IL, will be held in Room 3619, 226 South Dearborn Street.

MC 142207 (Sub-28F), Brannan Systems, Inc., now assigned for hearing on September 3, 1980 (3 days), at New Orleans, LA, will be held in Room No. 648, F. Edward Hebert Federal Building, 600 South Street.

MC 114552 (Sub-224F), Senn Trucking Company, now assigned for hearing on September 8, 1980 (1 day), at New Orleans, LA, will be held in Room No. 648, F. Edward Hebert Federal Building, 600 South Street.

MC 124078 (Sub-975F), Schwerman Trucking Co., now assigned for hearing on September 9, 1980 (1 day), at New Orleans, LA, will be held in Room No. 648, F. Edward Hebert Federal Building, 600 South Street.

MC 148078 (Sub-1F), Beau Parrish Express Co., Inc., now assigned for hearing on September 10, 1980 (3 days), at New Orleans, LA, will be held in Room No. 648, F. Edward Hebert Federal Building, 600 South Street.

MC 730 (Sub-477F), Pacific Intermountain Express Co., is transferred to Modified Procedure.

MC 138732 (Sub-31F), Osterkamp Trucking, Inc., now assigned for Prehearing Conference on September 30, 1980, at the Offices of the Interstate Commerce Commission, Washington, D.C.

MC 94201 (Sub-179F), Bowman Transportation, Inc., now assigned for Prehearing Conference on October 15, 1980, at the Offices of the Interstate Commerce Commission, Washington, D.C.

MC 2860 (Sub-191F), National Freight, Inc., now assigned for hearing on October 15, 1980, at the Offices of the Interstate Commerce Commission, Washington, D.C.

MC 1824 (Sub-105F), Preston Trucking Company, Inc., now assigned for hearing on October 27, 1980, at the Offices of the Interstate Commerce Commission, Washington, D.C.

MC 113855 (Sub-501F), International Transport, Inc., now assigned for hearing on October 28, 1980, at the Offices of the Interstate Commerce Commission, Washington, D.C.

MC 146448 (Sub-7F), C & L Trucking, Inc., now assigned for hearing on October 30, 1980, at the Offices of the Interstate Commerce Commission, Washington, D.C.

MC 18459 (Sub-13F), Britton Motor Service, Inc., is transferred to Modified Procedure.

MC 114569 (Sub-349F), Shaffer Trucking, Inc., is transferred to Modified Procedure.

MC 143829 (Sub-2F), Scalea's Airport Service, Inc., is transferred to Modified Procedure.

MC 147431F, M.L.D. and Sons Industries, is transferred to Modified Procedure.

AB-43 (Sub-63F), Illinois Central Gulf Railroad Company abandonment near Port Gibson and Crosby and Harriston and Fayette, Mississippi, now assigned for hearing on September 23, 1980 (9 days), at Fayette, MS, in a hearing room to be later designated.

AB-43 (Sub-38F), Illinois Central Gulf Railroad Company abandonment near Rosedale and Greenville, in Washington and Bolwar Counties, Mississippi, now assigned for hearing on November 3, 1980 (5 days), at Rosedale, Ms, in a hearing room to be later designated.

MC 121489 (Sub-16F), Nebraska-Iowa Xpress, Inc., now assigned for hearing on September 8, 1980, at Denver, CO., is transferred to Modified Procedure.

MC 2229 (Sub-227F), Red Ball Motor Freight, Inc., now assigned for hearing on September 22, 1980, at Kansas City, MO, is transferred to Modified Procedure.

MC 147273 (Sub-3F), Kenneth Shafer, d.b.a. K & T Hot Short Service, is transferred to Modified Procedure.

MC 107403 (Sub-1200F), Matlack, Inc., now assigned for continued hearing on

September 17, 1980, at the Offices of the Interstate Commerce Commission, Washington, D.C.

MC 2835 (Sub-43F), Adirondack Transit Lines, Inc., now assigned for hearing on September 15, 1980, at Plattsburgh, NY, is postponed to December 9, 1980 (4 days) at Plattsburgh, NY, in a hearing room to be later designated.

MC 115331 (Sub-510F), Truck Transport Inc., now assigned for hearing on September 8, 1980, at the Offices of the Interstate Commerce Commission, Washington, D.C.

MC 64373 (Sub-11F), Clarkson Bros. Machinery Haulers, Inc., now assigned for hearing on September 17, 1980, at the Offices of the Interstate Commerce Commission, Washington, D.C.

MC 29079 (Sub-144F), Brada Miller Freight System, Inc., Now assigned for hearing on September 24, 1980, at the Offices of the Interstate Commerce Commission, Washington, D.C.

MC 28088 (Sub-46F), North & South Lines, Inc., now assigned for hearing on September 30, 1980, at the Offices of the Interstate Commerce Commission, Washington, D.C.

MC 116859 (Sub-26F), Clark Transfer, Inc., now assigned for hearing on October 6, 1980, at the Offices of the Interstate Commerce Commission, Washington, DC.

MC 115703 (Sub-13F), Kreitz Motor Express, Inc., now assigned for hearing on October 8, 1980, at the Offices of the Interstate Commerce Commission, Washington, DC.

MC 144122 (Sub-51F), Carretta Trucking, Inc., now assigned for hearing on September 10, 1980 (1 day), at New York, NY; is postponed indefinitely.

MC 118318 (Sub-44F), Ida-Cal Freight Lines, Inc., now assigned for hearing on September 11, 1980, at Boise, Idaho, is postponed indefinitely.

MC 127278 (Sub-6F), Pacific Van & Storage Co., Inc., now assigned for hearing on October 6, 1980 (2 days), at Los Angeles, CA, at the Los Angeles County Courthouse, 111 North Hill Street.

MC 141443 (Sub-25), John Long Trucking, Inc., now assigned for hearing on October 2, 1980, at Los Angeles, CA, at the Los Angeles County Courthouse, 111 North Hill Street.

MC 127278 (Sub-6F), Paul Yates, Inc., now assigned for hearing on September 30, 1980 (1 week), at Los Angeles, CA, at the Los Angeles County Courthouse, 111 North Hill Street.

MC 118159 (Sub-343F), National Refrigerated Transport, Inc., now assigned for hearing on September 8, 1980, at Tampa, FL, in Suite 901, State Office Building, 1313 North Tampa Street.

MC 118159 (Sub-364F), National Refrigerated Transport, Inc., now assigned for hearing on September 9, 1980, at Tampa, FL, in Suite 901, State Office Building, 1313 North Tampa Street.

MC 128273 (Sub-326F), Midwestern Distribution, Inc., now assigned for hearing on September 10, 1980, at Tampa, FL, at the Holiday Inn Central, 11 West Fortune Street.

Agatha L. Mergenovich,

Secretary.

[FR Doc. 80-24805 Filed 8-14-80; 8:45 am]

BILLING CODE 7035-01-M

Long- and Short-Haul Applications for Relief (Formerly Fourth Section Application)

August 12, 1980.

These applications for long-and-short-haul or aggregate-of-intermediates relief have been filed with the I.C.C.

Protests are due at the I.C.C. by September 2, 1980.

Long-and-Short-Haul

No. 43852, Trans-Continental Freight Bureau, Agent (No. 551), reduced rates on iron and steel articles, from Minnequa, CO, to stations in Idaho, Oregon and Washington. Rates to be published in its Tariff ICC TCFB 3001-B. Grounds for relief—motor carrier competition.

Aggregate-of-Intermediates

No. 43851, Trans-Continental Freight Bureau, Agent (No. 550), reduced rates on iron and steel articles, from Minnequa, CO, to stations in Idaho, Oregon and Washington. Rates to be published in its Tariff ICC TCFB 300-B. Grounds for relief—maintenance of depressed rates to meet motor carrier competition without use of such rates as factors in constructing combination rates.

By the Commission.

Agatha L. Mergenovich,

Secretary.

[FR Doc. 80-24798 Filed 8-14-80; 8:45 am]

BILLING CODE 7035-01-M

Long- and Short-Haul Application for Relief (Formerly Fourth Section Application)

August 12, 1980.

This application for long-and-short-haul relief has been filed with the I.C.C.

Protests are due at the I.C.C. on or before September 2, 1980.

No. 43853, Southwestern Freight Bureau, Agent (No. B-79), increased rates on roofing and building materials, in carloads, from Southwesterrn to Southern stations, as published in Supplement 47 to its Tariff ICC SWEB 4693, scheduled to become effective September 3, 1980. Grounds for relief—additional revenue to offset increased operating costs.

By the Commission.

Agatha L. Mergenovich,

Secretary.

[FR Doc. 80-24799 Filed 8-14-80; 8:45 am]

BILLING CODE 7035-01-80

Motor Carrier Transfer Proceedings; Decision-Notice

As indicated by the findings below, the Commission has approved the following applications filed under 49 U.S.C. 10924, 10926, 10931 and 10932.

We find:

Each transaction is exempt from section 11343 (formerly section 5) of the Interstate Commerce Act, and complies with the appropriate transfer rules.

This decision is neither a major Federal action significantly affecting the quality of the human environment nor a major regulatory action under the Energy Policy and Conservation Act of 1975.

Petitions seeking reconsideration must be filed on or before September 4, 1980. Replies must be filed within 20 days after the final date for filing petitions for reconsiderations; any interested person may file and serve a reply upon the parties to the proceeding. Petitions which do not comply with the relevant transfer rules at 49 CFR 1132.4 may be rejected.

If petitions for reconsideration are not timely filed, and applicants satisfy the conditions, if any, which have been imposed, the application is granted and they will receive an effective notice. The notice will indicate that consummation of the transfer will be presumed to occur on the 20th day following service of the notice, unless either applicant has advised the Commission that the transfer will not be consummated or that an extension of time for consummation is needed. The notice will also recite the compliance requirements which must be met before the transferee may commence operations.

Applicants must comply with any conditions set forth in the following decision-notices on or before September 15, 1980, or within any approved extension period. Otherwise, the decision-notice shall have no further effect.

By the Commission, Chairman Gaskins, Vice Chairman Gresham, Commissioners Stafford, Clapp, Trantum, Alexis, and Gilliam.

MC-FC-78394. On reconsideration, by decision of July 7, 1980, issued under 49 U.S.C. 10926 and the transfer rules at 49 CFR Part 1132, The Commission approved the transfer to Jur Corporation d.b.a. Rajor, Franklin, TN, of Permits

MC-129862 (Sub-Nos. 1, 2, 3, 4, 5, 11, 12, 15, 17, and 19), issued April 9, 1975, November 4, 1974, February 10, 1977, August 26, 1975, November 26, 1975, March 9, 1977, February 27, 1978, February 24, 1978, September 26, 1978, and December 21, 1978, respectively, to Rajor, Inc., Franklin, TN, authorizing operations, over irregular routes, as follows:

MC 129862 (Sub-1): *Plumbing fixtures and supplies* and *air-conditioning and heating units,* (except articles which, because of size, shape or weight, require the use of special equipment or special handling), from St. Louis, MO, Port Huron, MI, Philadelphia, Greensburg, and York, PA, Braintree, MA, Houston, TX, East St. Louis, IL, and Fort Smith, AR, to points in AZ, CA, and NV; and *returned shipments* of the above-specified commodities, from points in AZ, CA, and NV, to St. Louis, MO, Port Huron, MI, Philadelphia, Greensburg, and York, PA, Braintree, MA, Houston, TX, East St. Louis, IL, and Fort Smith, AR. *Plumbing fixtures and supplies,* from Kohler, WI, Spartanburg, SC, and Camden, NJ, to points in AZ, CA, and NV, with no transportation for compensation on return except as otherwise authorized. *Air-conditioning units,* from Maspeth, Long Island, NY, to points in AZ, CA, and NV, with no transportation for compensation on return except as otherwise authorized. Restriction: The operations authorized herein are limited to a transportation service to be performed, under a continuing contract, or contracts, with York Division of Borg-Warner, of York, PA.

MC 129862 (Sub-2): (1) *Electronic instruments and components, tables and stands* for electronic instruments and components, and *toys and games,* other than coin-operated, from Greeneville and Jefferson City, TN, to Dallas, TX, Pasco and Seattle, WA, San Francisco and Torrance, CA, Denver, CO, Phoenix, AZ, Portland, OR, and Salt Lake City, UT, with no transportation for compensation on return except as otherwise authorized. Between Greeneville and Jefferson City, TN, on the one hand, and, on the other, Nogales, AZ. (2) *Equipment, materials, and supplies* used in the manufacture and production of the commodities in (1) above (except commodities in bulk, in tank vehicles), from Los Angeles and Long Beach, CA, and points in San Francisco, San Mateo, Alameda, and Contra Costa Counties, CA, to Greeneville and Jefferson City, TN. Restriction: The operations authorized in part (2) above is restricted to transportation in foreign commerce only. Restriction: The operations authorized herein are limited to a transportation service to be performed, under a continuing contract, or contracts, with the Magnavox Company, Inc., of Fort Wayne, IN.

MC 129862 (Sub-3): (1) *Running gears, hitches,* and *fenders* used for mobile homes, motor homes, trailers and recreational vehicles, from Anaheim and Los Angeles, CA, Tiffin, OH, and Dayton, OR, to points in the United States (except AL and HI and with no service to CA when shipments originate at Los Angeles and Anaheim); and (2) *Components, materials, and supplies* used in the manufacture, production, and assembly of the commodities described in (1) above, from points in the United States (except AK and HI), to Anaheim, and Los Angeles, CA, Tiffin, OH, and Dayton, OR. (3) *Electric and gas refrigerators* for mobile homes, motor homes, and trailers, and *parts* for such refrigerators, from Baltimore, MD, Elizabeth, NJ, Elkhart, IN, Dayton, OR, and Los Angeles and Anaheim, CA, to points in the United States (except AL and HI and with no service to CA when shipments originate at Los Angeles and Anaheim), with no transportation for compensation on return except as otherwise authorized. Restriction: The operations authorized hereinabove are limited to a transportation service to be performed under a continuing contract, or contracts, with Essick Manufacturing Division of A-T-O, Inc. (4) *Outdoor advertising metal poster panels, school furniture, lockers, portable filing cabinets, crane cabs, crane cab components, farm and construction machinery cabs and components* for farm and construction machinery cabs, from Tiffin, OH, to points in the United States (except AK and HI); and (5) *Components, materials, and supplies* used in the manufacture, production, and assembly of the commodities described in (4) above, from points in the United States (except AK and HI), to Tiffin, OH. Restriction: The operations authorized in (4) and (5) above are limited to a transportation service to be performed under a continuing contract, or contracts, with Tiffin Metal Products Division of A-T-O, Inc. (6) *Concrete mixers, mortar mixers, machines used for applying concrete, mortar, plaster, fireproofing and similar materials, road rollers, saws, motors, commercial air cooling systems and their pads,* and *air make-up heating and cooling equipment,* from Los Angeles, CA, and Elizabeth, NJ, to points in the United States (except AK and HI); and (7) *Components, materials, and supplies* used in the manufacture, production and assembly of the commodities described in (6) above, from points in the United States (except AK and HI), to Los Angeles, CA, and Elizabeth, NJ. (8) *Air coolers* and *air make-up heating and cooling equipment,* from Little Rock, AR, to points in the United States (except AK and HI); and (9) *Components, materials, and supplies* used in the manufacture, production, and assembly of the commodities described in (8) above, from points in the United States (except AK and HI), to Little Rock, AR. (10) *Machinery parts,* from Los Angeles, CA, to Little Rock, AR, and Elizabeth, NJ, with no transportation for compensation on return except as otherwise authorized. Restriction: The operations authorized in (6) through (10) above are limited to a transportation service to be performed under a continuing contract, or contracts, with Essick Manufacturing Division of A-T-O, Inc. (11) *Fire extinguishers* (charged and not charged) portable hand and wheeled, *fire extinguisher compounds, brass fire hose nozzles, brass fire hose couplings, brass valves and fittings, brass castings, brass fire engine accessories and equipment,* and *fire hose,* from Ranson and Charles Town, WV, and Charlottesville, VA, to points in the United States (except AK and HI); and (12) *Components, materials, and supplies* used in the manufacture, production, and assembly of the Charlottesville, VA. (13) *Fire hose* (with or without brass nozzles), *brass hose couplings* and *brass valves,* from North Bergen, NJ, to points in the United States (except AK and HI); and (14) *Components, materials, and supplies* used in the manufacture, production, and assembly of the commodities described in (13) above, from points in the United States (except AK and HI), to North Bergen, NJ. Restriction: The operations authorized in (11) through (14) above are limited to a transportation service to be performed under a continuing contract, or contracts with Badger-Powhatan-Blaze Buard Division of A-T-O, Inc. Restriction: The operations authorized herein are restricted against the transportation of commodities in bulk, in tank vehicles.

MC 129862 (Sub-4): *Air conditioning and heating units, component parts,* and *materials and supplies* utilized in the manufacture, sale, and distribution of the described commodities (except commodities in bulk and those which by reason of size or weight require the use of special equipment), between Madisonville, KY, on the one hand, and, on the other, points in AR, CA, and NV. Restriction: The operations authorized herein are limited to a transportation service to be performed under a

continuing contract, or contracts, with York Division of Borg-Warner Corporation, of York, PA.

MC 129862 (Sub-5): *Athletic, gymnastic, aquatic and sporting goods, parts, and accessories* of the foregoing commodities, *adhesives rubber tire treads, hardware, advertising material,* and *materials, equipment and supplies* utilized in the manufacture, sale, and distribution of the described commodities, from Santa Ana, CA, to Arlington and Houston, TX, Atlanta, Decatur, and Griffin, GA, Birmingham and Mobile, AL, Bridgeton, MO, Edison and Maywood, NJ, Elk Grove Village and River Grove, IL, Nashville, TN, New Orleans, LA, Shelby, OH, and Tampa, FL, with no transportation for compensation on return except as otherwise authorized. From points in TX, and points in and east of MN, IA, MO, AR, and LA, to Santa Ana, CA, with no transportation for compensation on return except as otherwise authorized. Restriction: The operations authorized herein are subject to the following conditions: The authority granted herein is restricted against the transportation of commodities in bulk and those which by reason of size or weight require the use of special equipment. The operations authorized herein are limited to a transportation service to be performed, under a continuing contract, or contracts, with AMF Volt, Inc., of Santa Ana, CA.

MC 129862 (Sub-11): *Athletic, gymnastic, aquatic,* and *sporting goods, parts and accessories* for the foregoing commodities, *adhesives, rubber, tire treads, hardware, advertising materials* and *materials, equipment and supplies* utilized in the manufacture, sale and distribution of the described commodities, from Santa Ana, CA, to points in and east of Minnesota, IA, NE, KS, OK, and TX, with no transportation for compensation on return except as otherwise authorized. *Aquatic equipment and accessories* and *game and sporting goods balls,* from ports of entry on the United States-Republic of Mexico Boundary line of Brownsville, El Paso, and Laredo, TX, to Chicago and Elk Grove Village, IL, and Maywood, NJ, with no transportation for compensation on return except as otherwise authorized. Restriction: The operations authorized herein are limited to a transportation service to be performed, under a continuing contract, or contracts, with AMF Voit, Inc.

MC 129862 (Sub-12): *Air conditioning and heating units* (except commodities which by reason or size or weight require the use of special equipment), from Jonesville, MI, Madisonville, KY, and York, PA, to points in CO, FL, GA, NM, OR, TX, UT, and WA, with no transportation for compensation on return except as otherwise authorized. From Jonesville, MI, to points in AZ, CA, and NV, with no transportation for compensation on return except as otherwise authorized. Restriction: The operations authorized herein are limited to a transportation service to be performed, under a continuing contract, or contracts, with York Division of Borg-Warner Corporation of York, PA.

MC 129862 (Sub-15): *Electronic instruments* and *components, tables and stands* for electronic instruments and *components,* and *toys and games* (except those which are coin operated), from Greeneville and Jefferson City, TN, to points in FL, with no transportation for compensation on return except as otherwise authorized. Restriction: The operations authorized herein are limited to a transportation service to be performed under a continuing contract, or contracts, with The Magnavox Company, of Fort Wayne, IN.

MC 129862 (Sub-17): *Air conditioning and heating units* (except commodities which by reason of size or weight require the use of special equipment), from Hopkinsville, KY, and Newark, DE, to points in AZ, CA, CO, FL, LA, NV, NM, OR, TX, UT, and WA. Restriction: The operations authorized herein are limited to a transportation service to be performed under a continuing contract(s) with York Division of Borg-Warner Corporation, of York, PA.

MC 129862 (Sub-19): *Air conditioning and heating units* (except commodities which because of size or weight require the use of special equipment), from points in Davidson County, TN, to points in AZ, CA, CO, FL, LA, MT, NE, NV, ND, OR, SD, UT, and WA. Restriction: The authority granted herein is limited to a transportation service to be performed under a continuing contract(s), with Heil-Quaker Corporation, of LaVergne, TN. Application for temporary authority has been filed under 49 U.S.C. 11349. Applicants' representative: William J. Monheim, P.O. Box 1756, Whittier, CA 90609.

Agatha L. Mergenovich,

Secretary.

[FR Doc. 80-24801 Filed 8-14-80; 8:45 am]

BILLING CODE 7035-01-M

American Motors Corp., et al.; Intent To Engage in Compensated Intercorporate Hauling Operations

This is to provide notice as required by 49 U.S.C. 10524(b)(1) that the named corporations intend to provide or to use compensated intercorporate hauling operations as authorized in 49 U.S.C. 10524(b).

1. Parent corporation and address of principal office: American Motors Corporation, 27777 Franklin Road, Southfield, MI 48034.

2. Wholly-owned subsidiaries which will participate in the operations, and addresses of their respective principal offices:

(a) American Motors (Canada) Limited, 350 Kennedy Road South, Brampton, Ontario L6V 2M3.
(b) American Motors International Sales Corporation, 27777 Franklin Road, Southfield, MI 48034.
(c) American Motors Pan American Corporation, 27777 Franklin Road, Southfield, MI 48034.
(d) American Motors Sales Corporation, 27777 Franklin Road, Southfield, MI 48034.
(e) AM General Corporation, 14250 Plymouth Road, Detroit, MI 48232.
(f) Canadian Fabricated Products Limited, 1172 Erie Street, Stratford, Ontario.
(g) Coleman Products Company, Highway 141 at Main Street, P.O. Box 261, Coleman, Wisconsin 54112.
(h) Evart Products Company, 601 W. 7th Street, Evart, MI 49631.
(i) Holmes Foundry Limited, 200 Exmouth Street, P.O. Box 970, Sarnia, Ontario N7T 7K2.
(j) Jeep Corporation, 27777 Franklin Road, Southfield, MI 48034.
(k) Jeep International Corporation, 27777 Franklin Road, Southfield, MI 48034.
(l) Jeep of Canada Limited, Kennedy Road South, Brampton, Ontario L6V 2M3.
(m) Mercury Plastics Company, 34501 Harper, Mt. Clemens, MI 48043.
(n) Michigan City Fabricators, Inc., 515 West Ireland Road, South Bend, Indiana 46614.
(o) Wheel Horse Products, Inc., 515 West Ireland Road, South Bend, Indiana 46614.
(p) Wheel Horse Sales, Inc., 515 West Ireland Road, South Bend, Indiana 46614.
(q) Windsor Plastics, Inc., 601 North Congress Avenue, Evansville, Indiana.

1. Parent corporation: *American Standard Inc.,* a Delaware corporation having its principal place of business at 40 West 40th Street, New York, NY 10018.

2. Wholly-owned subsidiaries which will participate in the operations, and the addresses of their respective principal offices are:

(a) A-S Energy, Inc., a Texas corporation, having its principal place of business at 1700 West Loop South, Suite 1490, Houston, Texas 77027.
(b) A-S Salem Inc., a Delaware corporation, having its principal place of business at 40 West 40th Street, New York, New York 10018.
(c) American Standard Credit Inc., a Delaware corporation, having its principal place of business at 2301 N.E. Adams Street, Peoria, Illinois 61639.

Amstan Trucking Inc., a Delaware corporation, having its principal place of

business at 40 West 40th Street, New York, New York 10018.
(e) The Mosler Safe Company, a New York corporation, having its principal place of business at 1561 Grand Boulevard, Hamilton, Ohio 45012.
(f) Stafford-Lowdon, Inc., a Delaware corporation, having its principal place of business at 2727 West 7th Street, Fort Worth, Texas 76107.
(g) WABCO Ltd., a Delaware corporation, having its principal place of business at P.O. Box 2050, Hamilton, Ontario, Canada.
(h) WABCO Standard Export Ltd., a Delaware corporation, having its principal place of business at 40 West 40th Street, New York, New York 10018.

1. Parent corporation and address of principal office: Anchor Hocking Corporation, 109 North Broad Street, Lancaster, OH 43130.

2. Wholly owned subsidiaries which will participate in the operations, and address of their respective principal offices:

(a) Capstan Transportation Co., 109 North Broad Street, Lancaster, OH 43130.
(b) Gas Transport, Inc., P.O. Box 1323, Parkersburg, WV 26101.
(c) Plastics, Inc., 224 Ryan Avenue, St. Paul, MN 55165.
(d) Moldcraft, Inc., 3920 Buena Vista Avenue, Baltimore, Maryland 21211.
(e) Hocking Valley Leasing Company, 109 North Broad Street, Lancaster, Ohio 43130.
(f) Keenan Oil Company, 2350 Seymour, Cincinnati, OH 45212.
(g) The Phoenix Glass Company, 9th & Washington, Monaca, PA 15061.
(h) Amerock Corporation, 4000 Auburn Street, Rockford, IL 61101.

1. Parent corporation and address of principal office: Consolidated Foods Corporation, a Maryland corporation, 135 South La Salle Street, Chicago, Illinois 60603.

2. Wholly-owned subsidiaries which will participate in the operations, and the addresses of their respective principal offices.

(a) Aris Isotoner Gloves, Inc., 417 Fifth Avenue, New York, New York 10016.
(b) Bloch & Guggenheimer, Inc., 34-02 Review Avenue, Long Island City, New York 11101.
(c) Booth Fisheries Corporation, Two North Riverside Plaza, Chicago, Illinois 60606.
(d) Bryan Foods, Inc., P.O. Box 1177, West Point, Mississippi 39773.
(e) Chef Pierre, Inc., P.O. Box 1009, Traverse City, Michigan 49684.
(f) Electrolux Corporation, 2777 Summer Street, Stamford, Connecticut 06905.
(g) The Fuller Brush Company, Westport Addition, P.O. Box 729, Great Bend, Kansas 67530.
(h) Gallo Salame, Inc., 250 Brannon Street, San Francisco California 94107.
(i) Idaho Frozen Foods Corporation, P.O. Box 128, Twin Falls, Idaho 83301.
(j) Kitchens of Sara Lee, Inc., 500 Waukegan Road, Deerfield, Illinois 60015.
(k) Hollywood Brands, Inc., 100 South Poplar, Centralia, Illinois 62801.
(l) The Lawson Company, 210 Broadway East, Cuyahoga Falls, Ohio 44222.
(m) Lyon's Restaurants, Inc., 1165 Triton Drive, Foster City, California 94404.
(n) Oxford Chemicals, Inc., 5001 Peachtree Industrial Blvd., Chamblee, Georgia 30341.
(o) Oxford Services, Inc., 1445 Marietta Blvd., NW., Atlanta, Georgia 30318.
(p) Popsicle Industries, Inc., 110 Route 4, P.O. Box 200, Englewood, New Jersey 07631.
(q) PYA/Monarch, Inc., 2818 White Horse Road, P.O. Box 1569, Greenville, South Carolina 29602.
(r) Robert Bruce, Inc., "C" and Westmoreland Street, Philadelphia, Pennsylvania 19134.
(s) Shasta Beverages, Inc., 26901 Industrial Boulevard, Hayward, California 94545.
(t) Sirena, Inc., 10333 Vacco Street, South El Monte, California 91733.
(u) Twin Rivers Transportation Company, P.O. Box 394, Deerfield, Illinois 60015.
(v) Tyco Industries, Inc., 540 Glen Avenue, Moorestown, New Jersey 08057.
(w) Union Sugar Company, 100 Pine Street, Suite 2575, San Francisco, California 94111.

1. Parent corporation and address of principal office: Chromalloy American Corporation, 120 South Central Avenue, St. Louis, Missouri 63105.

2. Wolly owned subsidiaries which will praticipate in the operations, and address of their respective principal offices:

(a) A & M Fleeting & Towing, Inc., P.O. Box 159, Vacherie, LA 70090.
(b) Airport Service, Inc., 851 E. Cerritos Ave., Anaheim, CA 92805
(c) American Transit Corp., 120 S. Central, St. Louis, MO 63105.
(d) American Universal Insurance Co., 144 Wayland Ave., Providence, RI 02704.
(e) Assurers' Service, Inc., 144 Wayland Ave., Providence, RI 02704.
(f) Barclay Manufacturing, Inc., 1013 S. Council St., Muncie, IN 47302.
(g) Brewer Barge Lines, Inc., 6821 Piccadilly, Houston, TX 77061.
(h) Brewer Marine Services, Inc., 6821 Piccadilly, Houston, TX 77061.
(i) Brewer Towing Company, 6821 Piccadilly, Houston, TX.
(j) Centor Center, Inc., 120 S. Central Ave., St. Louis, MO 63105.
(k) The Centor Company, 120 S. Central Ave., St Louis, MO 63105.
(l) Chromalloy Electronics Corp., 12421 W. Olympic Blvd., Los Angeles, CA 90064.
(m) Chromalloy Finance, 120 S. Central Ave., St. Louis, MO 63105.
(n) Chromalloy Pharmaceutical, Inc. 1034 S. Brentwood, St. Louis, MO.
(o) Chromalloy Trucking & Transportation, Inc., 2564 Harley Drive, Maryland Heights, MO 63043.
(p) E.R.K. Manufacturing, Inc., 1085 S.U.S.I. Stuart, FL 33494.
(q) Environment Energy Consultants, Inc., 1034 S. Brentwood, St. Louis, MO.
(r) Evco Marine, Inc., 6821 Piccadilly Houston, TX 77061.
(s) F.M.S. Transportation, Inc., 2564 Harley Dr. Maryland Heights, MO 63043.
(t) Gas Turbine Corporation, 4430 Director Dr. San Antonio, TX 78220.
(u) Hausman Bus Parts, Inc., 2323 S. Archer Ave., Chicago, IL 60616.
(v) Hou-Tex Barge Co., 6821 Piccadilly, Houston, TX 77061.
(w) Industrial Applications International, Inc., 32400 Aurora Rd., Solon, OH 44139.
(x) Industrial Test Labs, Inc., 2350 S. 7th St., St., Louis, MO 63104.
(y) Intercom Sales Co. Inc., 7183 Construction Ct., San Diego, CA 92121.
(z) Island Terminal Co., 1830 Dock St., Memphis, TN 38101.
(aa) Jeffcon of Texas, Inc., 200 Valley Forge, Port Arthur, TX 77640.
(bb) Jefferson Construction Co., Inc., P.O Box 3641, 200 Valley Forge, Port Arthur, TX 77640.
(cc) Kelmac Trucking, Inc., 7720 Fordey Ave., St. Louis. MO 63147.
(dd) M.V.B.L. Terminal, Foot of Rutger St., St. Louis. MO 63104.
(ee) Madison Service Corp., 166 S. Fair Oaks Ave., Madison. WI 53704.
(ff) McBride's Express, Inc., East Route 316, Mattoon. IL 51938.
(gg) Mead Johnson Terminal Corp., 1830 W. Ohio St., Evansville, IN 47704.
(hh) Missouri River Barge Lines, Inc., 4550 W. 109th St., Overland Park, KS 66207.
(ii) Namour Towing Co., 120 S. Central, St. Louis, MO 63105.
(jj) National Seating Co., P.O. Box 906 555 Park Ave., East Mansfield, OH 44901.
(kk) Orange Coast Sightseeing Company, 851 E. Cerritos Ave., Anaheim, CA 92805.
(ll) The Puro Co., Inc., 2801 Locust St. St. Louis, MO 63103.
(mm) Sabine Towing & Transportation Co., Inc. P.O. Box 1528, Groves, TX 77619.
(nn) The Saval Group, Inc., 22 Batterymarch St. Boston, MA 02109.
(oo) Maurice H. Saval, Inc., 22 Batterymarch St., Boston, MA 02109.
(pp) Security Barge Line, Inc., P.O. Box 4927, Greenville, MS 38701.
(qq) Sturm Machine Co., 1305 Main St., Barboursville, WV 25504.
(rr) Swiss Albe, Inc., P.O. Box 788, 4 Broad St., Norwalk, CT 06852.
(ss) Texas Motor Coaches, Inc., 710 Davis St. P.O. Box 959, Grand Prairie, TX 75051.
(tt) Trans-Gulf Forwarders, Inc., 120 S. Central Ave., St. Louis, MO 63105.
(uu) Transit Service Corp., 120 S. Central Ave., St. Louis, MO 63105.
(vv) Valley Barge Line Co., 120 S. Central Ave., St. Louis, MO 63105.
(ww) The Valley Line Co., 120 S. Central Ave., St. Louis, MO 63105.
(xx) Valley Line Supply & Equipment Company, 120 S. Central Ave., St. Louis, MO 63105.
(yy) Valley Terminal Co., Mehring Way & Carr Streets, Cincinnati, OH 45203.
(zz) Vicksburg Towing Co., Inc., P.O. Box 4950, Greenville, MS 38701.

1. Parent corporation and address of principal office: Dayco Corporation, 333 West First Street, Dayton, Ohio 45402.

2. Wholly-owned subsidiaries and divisions which will participate in the operations, and address of their respective principal offices:

(a) Allen Industries, Inc., 143 Indusco Court, Troy, Michigan 48084.
(b) Briggs Rubber Products Co., 3 Bellecor Drive, New Castle, Delaware 19720.

(c) Cadillac Plastic & Chemical Company, 1221 Bowers Street, Birmingham, Michigan 48012.
(d) Colonial Rubber Works, Inc., 150 South Connell Avenue, Dyersburg, Tennessee 38024.
(e) Custom Coated Products, 1280 Glendale-Milford Road, Cincinnati, Ohio 45215.
(f) Dayflex Company, 333 West First Street, Dayton, Ohio 45402.
(g) Electric Hose & Rubber Company, 3100 Maricamp Road, Ocala, Florida 32670.
(h) Flexible Hose & Duct Company, Newtown Industrial Commons, Friends Lane, Newtown, Pennsylvania 18940.
(i) Flexible Metal Hose Mfg. Co., 777 West 16th Street, Costa Mesa, California 92627.
(j) Frisch Manufacturing Division, 1400 Wabansia Avenue, Chicago, Illinois 60622.
(k) L. E. Carpenter and Company, 170 North Main Street, Wharton, New Jersey 07885.
(l) Louis H. Hein Company, 1151 Matsons Ford Road, West Conshohocken, Pennsylvania 19428.
(m) Seward Luggage Manufacturing Company, 434 High Street, Petersburg, Virginia 23803.
(n) Standard Coated Products, Hazleton, Pennsylvania.
(o) TFE Industries, 148 Parkway Avenue, kalamazoo, Michigan 49007.

1. Parent corporation and address of principal office: Ergon, Inc., 202 East Pearl St., Jackson, MS 39201.

2. Wholly-owned subsidiaries which will participate in the operations, and address of their respective principal offices:

(a) Big Valley Towing, Inc., 202 E. Pearl St., Jackson MS 39201.
(b) Clarco Pipe Line Company, 202 E. Pearl St., Jackson, MS 39201.
(c) Ergon-Environmental Services, Inc., 202 E. Pearl St., Jackson, MS 39201.
(d) Ergon's General Store, Inc., 202 E. Pearl St., Jackson, MS 39201.
(e) Ergon Trucking, Inc., 202 E. Pearl St., Jackson, MS 39201.
(f) Magnolia Marine Transport Company, 202 E. Pearl St., Jackson, MS 39201.
(g) Miller Oil Purchasing Company, 202 E. Pearl St., Jackson, MS 39201.
(h) Mobile Bulk Terminal, Inc., 202 E. Pearl St., Jackson, MS 39201.
(i) Service Gas and Pipeline Company, 202 E. Pearl St., Jackson, MS 39201.

1. Parent corporation and address of principal office: Fruehauf Corporation, 10900 Harper Avenue, Detroit, Michigan 48213.

2. Wholly-owned subsidiaries which will participate in the operations and address of their respective principal offices:

a. Fruehauf Finance Company, a Michigan corporation, 10900 Harper Avenue, Detroit, Michigan 48213.
b. Fruehauf Rental Equipment, Inc., a Delaware corporation, 10900 Harper Avenue, Detroit, Michigan 48213.
c. The Mercer Co., a Delaware corporation, 10900 Harper Avenue, Detroit, Michigan 48213.
d. Transport Acceptance Corporation, a Delaware corporation, 1422 Lebanon Road, Nashville, Tennessee 37210.
e. Fruehauf International Limited, a Delaware corporation, 10900 Harper Avenue, Detroit, Michigan 48213.
f. Fruekel, Inc., a Michigan corporation, 10900 Harper Avenue, Detroit, Michigan 48213.
g. Fruehauf International Sales Corporation, a Delaware corporation, 10900 Harper Avenue, Detroit, Michigan 48213.
h. Jacksonville Shipyards, Inc., a Florida corporation, 750 East Bay Street, Jacksonville, Florida 32202.
i. Electro Lube Devices, Inc., a Florida corporation, 16 North Georgia Street, Jacksonville, Florida 32202.
j. JAX Development Company, a Florida corporation, 750 East Bay Street, Jacksonville, Florida 32202.
k. JAX Regency Company, a Florida corporation, 750 East Bay Street, Jacksonville, Florida 32202.
l. JAX St. Johns, Inc., a Florida corporation, 750 East Bay Street, Jacksonville, Florida 32202.
m. Fruehauf Europe, Inc., a Michigan corporation, 10900 Harper Avenue, Detroit, Michigan 48213.
n. Kelsey-Hayes Company, a Delaware corporation, 38481 Huron River Drive, Romulus, Michigan 48174.
o. Maryland Shipbuilding & Drydock Company, Inc., a Maryland corporation, 2900 Childs Street, Baltimore, Maryland 21226.
p. Paceco, Inc., a California corporation, 2320 Blanding Avenue, Alameda, California 94501.
q. Rentco International Corporation, a Delaware corporation, 10900 Harper Avenue, Detroit, Michigan 48213.
r. Trailer Rentals, Inc., a Tennessee corporation, 1422 Lebanon Road, Nashville, Tennessee 37210.

1. The parent corporation and address of the principal office is: H. P. Hood Inc., 500 Rutherford Avenue, Boston, MA 02129.

2. Wholly-owned subsidiaries which will participate in the operations, and address of their respective principal offices are:

(a) Clearfield Cheese Company, P.O. Box 120, Curwensville, PA 16833.
(b) Reed Candy Co., Crossroads of Commerce, Rolling Meadows, IL 60008.
(c) Clearfield Transportation Company, Inc., P.O. Box 313, Clinton, MO 64735.

1. *Parent.* Kidde, Inc. ("Kidde") and the address of its principal office is 9 Brighton Road, Clifton, NJ 07015.

2. *Wholly-owned Subsidiaries which May Participate in the Operations, and Addresses of Their Respective Principal Offices:*

Atlantic Fabricators of New Jersey, Inc., 9 Brighton Road, Clifton, NJ 07015
Brighton Properties, Inc., 9 Brighton Road, Clifton, NJ 07015
Fenwal International Incorporated, 400 Main Street, Ashland, MA 01721.
Firemaster, Inc., 435 Forbes Boulevard, South San Francisco, CA 94080.
Globe Security Systems, Inc., 2503 Lombard Street, Philadelphia, PA 19146.
Globe Systems, Inc., 2503 Lombard Street, Philadelphia, PA 19146.
E. J. Burke Security Systems, Inc., 2503 Lombard Street, Philadelphia, PA 19146.
Globe Protection, Inc., 2503 Lombard Street, Philadelphia, PA 19146.
Globe Security Services, Inc., 2503 Lombard Street, Philadelphia, PA 19146.
Globe Security Systems Co., 2503 Lombard Street, Philadelphia, PA 19146.
Industrial Security Services, Inc., 2503 Lombard Street, Philadelphia, PA 19146.
Inter-State Bureau of Investigation, Inc., Inter-State Building, 725 Deepdene Road, Baltimore, MD 21210.
Inter-State Detective Agency, Inc., 407 South Dearborn Street, Chicago, IL 60605.
Interstate Security Service, Inc., 77 Milltown Road, East Brunswick, NJ 08816.
Interstate Security Services, North, Inc., 77 Milltown Road, East Brunswick, NJ 08816.
Interstate Security Services, Inc. (Conn.), 77 Milltown Road, East Brunswick, NJ 08816.
Interstate Service Corporation, 407 South Dearborn Street, Chicago, IL 60605.
Merit Protective Service, Inc., 501 St. Paul Place—Suite 903, Baltimore, MD 21202.
Mutual Laboratories, Inc., 407 South Dearborn Street, Chicago, Il 60605.
Southern Security Devices, Inc., 1208 West Peachtree Street, NW, Atlanta, GA 30309.
Southern Security Services, Inc., 1208 West Peachtree Street, NW, Atlanta, GA 30309.
Merchants Patrol, Incorporated, 1208 West Peachtree Street, NW, Atlanta, GA 30309.
6. H. Sparks, Inc., 9825 Tulip Street, Philadelphia, PA 19135.
Grove International Corporation, 1565 Buchanan Trail East (Rt. 16), Shady Grove, PA 17256.
Kidde Consumer Durables Corp., 2 Bala Cynwyd Plaza, 333 East City Line Avenue, Bala Cynwyd, PA 19004.
Amico, Inc., 105 Sylvania Place, South Plainfield, NJ 107080.
LCA Holding, Inc., 9 Brighton Road, Clifton, NJ 07015.
Deena Products Co., Route 51, PO Box 158, Arlington, KY 42021.
Dura Steel Products Co., 13901 South Carmenita Road, Santa Fe Springs, CA 90670.
Fashion, Inc., 311 Sunshine Road, Kansas City, KA 66115.
Ram Corporation, Inc., 311 Sunshine Road, Kansas City, KA 66115.
Fuhry, Inc., 1125 Ivanhoe Road, Cleveland, OH 44110.
Gailstyn Sutton, Inc., 105 Sylvania Place, South Plainfield, NJ 07080.
Keystone Lamp Mfg. Co., RD 4, Slatington, PA 18080.
Fulton Manufacturing Co., Inc., PO Box 38, Walnutport, PA 18088.
Mobilite, Inc., 100 Engineers Road, Hauppauge, NY 11787.
Richard Mfg. Co., 4505 Bandini Boulevard, Los Angles, CA 90040.
Vigon Lighting, Inc., 201 West Carob Street, Compton, CA 90220.
Kim Lighting, Inc., 16555 East Cale Avenue, City of Industry, CA 91748.

Marvin Electric Manufacturing Company, 6100 South Wilmington Avenue, Los Angeles, CA 90001.
Devine Lighting, Inc., 8100 South Wilmington Avenue, Los Angeles, CA 90001.
Piedmont Moulding Corporation, 2203 Industrial Boulevard, Conyers, GA 30207.
Rexair Inc., 230 7th Street, Cadillac, MI 49601.
Shadeco, Inc., 4202 Old Bethlehem Pike, Telford, PA 18969.
Spartus Corporation, 3856 Oakton Street, Skokie, Il 60076.
Spartus Export Sales Corporation, 3856 Oakton Street, Skokie, IL 60076.
Whiteway Manufacturing Co., 1736 Dreman Avenue, Cincinnati, OH 45223.
J. W. Lighting, Inc., 750 Almeda-Genoa Road, Houston, TX 77045.
Vanity Fair Industries, Inc., 260 Bethpoage-Spagnoli Road, Melville, NY 11747.
Kidde Export Corporation, 675 Main Street, Belleville, NJ 07109.
Kidde Holdings, Inc., 9 Brighton Road, Clifton, NJ 07015.
American Desk Manufacturing Company, 49th Street and West Avenue G, Temple, TX 76601.
American Desk International Corporation, 49th Street and West Avenue G, Temple, TX 75601.
Associated Testing Laboratories, Inc., Northwest Industrial Park, Burlington, MA 01803.
Bayless Stationers, Inc., 5111 West Washington Boulevard, Los Angeles, CA 90016.
Bright Star Industries, Incorporated, 600 Getty Avenue, Clifton, NJ 07015.
Circle Steel Corporation, Circle Park, Taylorville, IL 62568.
Cook Pump Company, 1407 West 12th Street, Coffeyville, KN 67337.
Craig Systems Corporation, 360 Merrimack Street, Lawrence, MA 01842.
Craig Systems International Corporation, 360 Merrimack Street, Lawrence, MA 01842.
Dura Corporation, 26711 Northwestern Highway, Southfield, MI 48076.
Dura International Corporation, 26711 Northwestern Highway, Southfield, MI 48076.
Switches International Inc., 26711 Northwestern Highway, Southfield, MI 48076.
Jacuzzi Inc., 11511 New Benton Highway, Little Rock, AR 72201.
Jacuzzi Domestic International Sales Corp., 11511 New Benton Highway, Little Rock, AR 72201.
The Jade Corporation, 3063 Philmont Avenue, Huntingdon Valley, PA 19006.
Javelin Electronics, Inc., 6357 Arizona Circle, Los Angeles, CA 90045.
Kidde Acquiring Corp., 9 Brighton Road, Clifton, NJ 07015.
Cosco, Inc., 2525 State Street, Columbus, IN 47201.
CSO, Inc., 2525 State Street, Columbus, IN 47201.
Sunset Cosco, Inc., 6000 East Slauson Avenue, City of Commerce, CA 90040.
Kidde Consultants, Inc., 1020 Cromwell Bridge Road, Baltimore, MD 21204.
KCI International, Inc., 1020 Cromwell Bridge Road, Baltimore, MD 21204.
OSM International, Inc., 1020 Cromwell Bridge Road, Baltimore, MD 21204.
Lansdale Transistor & Electronics, Inc., 3600 West Osborn Road, Phoenix AZ 85019.
Manlift, Inc., 8510 Golden State Boulevard, Selma, CA 93662.
High Rider Equipment Company, 8510 Golden State Boulevard, Selma, CA 93662.
McKinney Manufacturing Company, 820 Davis Street, Scranton, PA 18505.
National Crane Corporation, 11200 North 148th Street, Waverly NB 68462.
Newport Plastics Corporation, Derby Road, Newport, VT 05855.
SRM Business Services, Inc., 44th at Sheridan Road, Tulsa, OK 74145.
McQuiddy Office Designers, Inc., 110 Seventh Avenue North, Nashville, TN 37202.
Ross Martin Company of Delaware, Inc., 44th at Sheridan Road, Tulsa, OK 74145.
Scott-Rice Co. of Delaware, Inc., 3717 South Sheridan, Tulsa, OK 74145.
South Texas Equipment Company, Inc., 1495 North Post Oak Road, Houston, TX 77001.
Toledo Commutator Co., Inc., 1101 South Chestnut Street, Owosso, MI 48867.
Tose, Inc., 424 West 4th Street, Bridgeport, PA 19405.
Victor United, Inc., 2900 North Rockwell Street, Chicago, IL 60618.
Nissen Corporation, 320 27th Avenue, SW., Cedar Rapids, IA 52406.
Professional Nurses Bureau, 6430 Sunset Boulevard, Suite 610, Los Angeles, CA 90028.
Universal Gym Equipment, Inc., 930 27th Avenue SW., Cedar Rapids, IA 52406.
W. K. 26, Inc., 9 Brighton Road, Clifton, NJ 07015.
K & S Mfg. Co., Inc., 808 Bluemound Road, Fort Worth, TX 76131.
K & S Industries, Inc., 808 Bluemound Road, Fort Worth, TX 76131.
W. K. 41, Inc., 9 Brighton Road, Clifton, NJ 07015.
Input Output, Inc., 8009 Harwin Drive, Houston, TX 77036.
Kidde Merchandising Equipment Group, Inc., 100 Bidwell Road, South Windsor, CT 06074.
Total Limited, 9 Brighton Road, Clifton, NJ 07015.
Treher-Montague, Inc., 322 North 7th Street, Allentown, PA 18105.
W. D. Byron & Sons, Inc., Williamsport, MD 21795.

1. Parent corporation and address of principal office: McAuley Oil Company, 666 East Ocean Boulevard, Suite 1104, Long Beach, California 90800.

2. Wholly-owned subsidiary which will participate in the operations, and address of its principal office: VTS TRUCKING, 2676 Orange Avenue, Signal Hill, California 90806.

Parent Corporation & Principal Office. National Can Corporation, 8101 West Higgins Road, Chicago, Illinois 60631.

Wholly-Owned Subsidiaries and Their Respective Principal Offices:

1. Apache Container Corporation, 1230 Grey Fox Road, St. Paul, Minnesota 55112.
2. Clermont Fruit Packers, Star Route, Hudson, New York 12534.
3. Dura-Bernardin, Inc., 7300 South Narragansett Avenue, Bedford Park, Illinois 60638.
4. Lucca Packing Company of California, 360 Harbor Way, South San Francisco, California 94080.
5. M-H Packaging Systems, Inc., 3178 Spruce Street, Little Canada, Minnesota 55117.
6. National Food Ingredient Company, 4830 South Christiana, Chicago, Illinois 60632.
7. Packaging System, Inc., 751 North Hilltop Drive, Itasca, Illinois 60143.
8. NCC Foods Corporation, 1657 Rollins Road, Burlingame, California 94010.

1. Parent corporation: North American Phillips Corporation, 100 East 42nd St., New York, NY 10017.

2. Wholly owned subsidiaries:

1. Advance Transformer Company, an Illinois corporation, 2950 North Western Avenue, Chicago, Illinois 60618.
2. Airpax International Sales Corporation, a Maryland corporation, 100 East 42nd Street, New York, New York 10017.
3. Alliance Manufacturing Company, Inc., an Ohio corporation, 1630 Lake Park Boulevard, Alliance, Ohio 44601.
4. Amperex Electronic Corporation, a Delaware corporation, Providence Pike, Slatersville, Rhode Island 02876.
5. Amperex Electronics Industries, Inc., a Delaware corporation, George Washington Highway, Smithfield, Rhode Island.
6. Dialight Corporation, a Delaware corporation, 203 Harrison Place, Brooklyn, New York 11237.
7. Anchor Brush Company, Inc., a Delaware corporation, 625 South Railroad Street, Montgomery, Illinois 60538.
8. Chicago Magnet Wire Corp., an Illinois corporation, 901 Chase Avenue, Elk Grove Village, Illinois 60007.
9. C.P.D., Inc., a Texas corporation, 8811 West Carpentar Freeway, Dallas, Texas 75247.
10. Kulka Electric Corp., a New York corporation, 520 South Fulton Avenue, Mount Vernon, New York 10550.
11. Mepco/Electra, Inc., a Delaware corporation, Columbia Road, Morristown, New Jersey 07960.
12. Norelco Service, Inc., a Delaware corporation, 100 East 42nd Street, New York, New York 10017.
13. North American Philips Controls Corporation, a Delaware corporation, Cheshire Industrial Park, P.O. Box 768, Cheshire, Connecticut 06410.
14. The Magnavox Company, a Delaware corporation, 1700 Magnavox Way, Fort Wayne, Indiana 76804.
15. Baker, Knapp & Tubbs, Inc., a North Carolina corporation, 416 Merchandise Mart, Chicago, Illinois 60654.
16. LaSalle-Deitch Company, Inc., a Delaware corporation, 640 Industrial Parkway, Elkhart, Indiana 46514.
17. Magnavox CATV Systems, Inc., a Delaware corporation, 133 West Seneca Street, Manlius, New York 13104.
18. Magnavox Consumer Electronics Company, a Delaware corporation, 1700 Magnavox Way, Fort Wayne, Indiana 46804.
19. Magnavox International, Inc., a Delaware corporation, 1700 Magnavox Way, Fort Wayne, Indiana 46804.

20. Philips High Fidelity Laboratories, Ltd., a Delaware corporation, 1700 Magnavox Way, Fort Wayne, Indiana 46804.
21. Magnavox Government and Industrial Electronics Company, a Delaware corporation, 1313 Production Road, Fort Wayne, Indiana 46804.
22. The Selmer Company, a Delaware corporation, 640 Industrial Parkway, Elkhart, Indiana 46514.
23. North American Philips Lighting Corporation, a Delaware corporation, Bank Street, Hightstown, New Jersey 08520.
24. Lustra Lighting Corporation, a Delaware corporation, 180 Manor Road, East Rutherford, New Jersey 07073.
25. Norelco Lighting Supply Company, a Delaware corporation, Bank Street, Hightstown, New Jersey 08520.
26. Verd-A-Ray Corporation, a Delaware corporation, 615 Front Street, Toledo, Ohio 43605.
27. Philips Broadcast Equipment Corp., a Delaware corporation, 99 Jericho Turnpike, Jericho, New York 11753.
28. Philips Business Systems, Inc., a Delaware corporation, 175 Froehlich Farm Boulevard, Woodbury, New York 11797.
29. Philips Electronics, Inc., a Delaware corporation, 100 East 42nd Street, New York, New York 10017.
30. Philips Electronic Instruments, Inc., a Delaware corporation, 750 South Fulton Avenue, Mt. Vernon, New York 10550.
31. Philips Test and Measuring Instruments, Inc., a Delaware corporation, 400 Crossways Park Drive, Woodbury, New York 11797.
32. Philips Elmet Corporation, a Delaware corporation, Lisbon Road, Lewiston, Maine 04340.
33. Philips Medical Systems, Inc., 710 Bridgeport Avenue, Shelton, Connecticut 06484.
34. Philips Roxane, Inc., a Delaware corporation, 2621 North Belt Highway, St. Joseph, Missouri 64506.
35. Herman H. Smith, Inc., a New York corporation, 812 Snediker Avenue, Brooklyn, New York 11207.
36. Thompson-Hayward Chemical Company, a Delaware corporation, 5200 Speaker Road, Kansas City, Kansas 66106.
37. Consumer Products Division, Philips Park, Bokum Road, Box 500, Essex, Connecticut 06426.
38. North American Philips Controls Division, Cheshire Industrial Park, P.O. Box 768, Cheshire, Connecticut 06410.
39. Ohmite Manufacturing Company Division, 3601 Howard Street, Skokie, Illinois 60076.
40. Philips Laboratories Division, 345 Scarborough Road, Briarcliff Manor, New York 00510.

Parent corporation & address: Pacific Coast Building Products, Inc., 3001 Eye Street, 2nd Floor, P.O. Box 160488, Sacramento, California 95816.

Wholly-owned subsidiaries.

Discomart, Inc., d.b.a. Pacific Lumber & Supply, 1140 West Bonanza Road, Las Vegas, Nevada 89101.
Glass Mountain Block, Inc., 355 Greg Street, Sparks, Nevada 89431.
Glass Mountain Block, Inc., 2524 Highway 50 East, Carson City, Nevada 89701.

1. Parent corporation and address of principal office: Peavey Company, 730 Second Avenue South, Minneapolis, Minnesota 55402.

2. Wholly-owned subsidiaries which will participate in the operations and address of their respective principal offices:

a. Peavey Delaware Limited, 730 Second Avenue South, Minneapolis, Minnesota 55402.
b. Peavey International, Inc., 730 Second Avenue South, Minneapolis, Minnesota 55402.
c. M&R Distributing Company, P.O. Box E, West Highway 30, Grand Island, Nebraska 68801.
d. Wheelers Distributing Co., P.O. Box E, West Highway 30, Grand Island, Nebraska 68801.
e. U.S. Floor Systems, Inc., P.O. Box 18425, Highway No. 70 at Ebenezer Road, Raleigh, North Carolina 27609.

(1) Parent corporation and address: RHM Holdings (USA), Inc., 700 Oak Street, Winnetka, Illinois 60093.

(2) Wholly-owned subsidiaries which will participate in the operations and address of their respective principal office:

(a) RHM Food Products, Inc., 700 Oak Street, Winnetka, Illinois 60093.
(b) Indian Summer, Inc., 631 East Walnut Street, Evansville, Indiana 47713.
(c) The Red Wing Company, Inc., 196 Newton Street, Fredonia, New York 14063.
(d) RHM Macaroni, Inc., 700 Oak Street, Winnetka, Illinois 60093.
(e) Alfonso Gioia & Sons, Inc., 89 Canal Street, Rochester, New York 14601.
(f) Gioia Macaroni, Inc., 1700 Elmwood Avenue, Buffalo, New York 14240.
(g) Dante Food Products Company, Inc., 1700 Elmwood Avenue, Buffalo, New York 14240.
(h) Piscitello Macaroni Company, Inc., 1700 Elmwood Avenue, Buffalo, New York 14240.
(i) Ravarino and Freschi, Inc., 4651 Shaw Boulevard, St. Louis, Missouri 63110.
(j) Merlinos Major Italian Food Company, Inc., 8247 South 194th Street, Kent, Washington 98031.

1. Parent corporation and address of principal office: Rockwell International Corporation, 600 Grant Street, Pittsburgh, PA 15219.

2. Wholly-owned subsidiaries which will participate in the operations and address of their respective principal offices:

(a) Wescom, Inc., 8245 South Lemont Road, Downers Grove, Illinois 60515.
(b) MGD Graphic Systems, Inc., 3100 South Central Avenue, Chicago, Illinois 60650.
(c) Amforge, Inc., 1220 W. 119th Street, Chicago, Illinois 60643.

1. Parent corporation and address of principal office: Southern Pacific Transportation Company, One Market Plaza, San Francisco, CA 94105.

2. Wholly-owned subsidiaries which will participate in the operations, and address of their respective prinicpal offices:

(a) Louis Heller, Inc., 1766 El Camino Real, Burlingame, CA 94010.
(b) Southern Pacific International, One California Street, Suite 2760, San Francisco, CA 94111.

1. Parent corporation and address: The Sperry and Hutchinson Company, 330 Madison Avenue, New York, New York 10017.

2. Wholly-owned subsidiaries which will participate in the operations, and address of their respective principal offices:

(a) Bigelow-Sanford, Inc., P.O. Box 3089, Greenville, South Carolina 29602.
(b) Buck Creek Industries, Inc., Suite 100, 5800 Building, Eastgate Center, Chattanooga, Tennessee 37411.
(c) Daystrom Furniture, Inc., Sinai Road, South Boston, Virginia 24592.
(d) The Gunlocke Company, Inc., Wayland, New York 14592.
(e) Homecrest Industries, Inc., Box 350, Route 1, Wadena, Minnesota 56482.
(f) Sperry and Hutchinson Furniture, Inc., One Plaza Center, P.O. Box HP3, High Point, North Carolina 27261.

1. Parent corporation and address: TRW Inc., 23555 Euclid Avenue, Cleveland, Ohio 44117.

2. Wholly-owned subsidiaries which will participate in the operations, and address of their respective principal offices:

a. Aertech Industries, 825 Stewart Drive, Sunnyvale, California 94086.
b. Control Concepts, Inc., Terry Drive, Newton Industrial Commons, Newton, Pennsylvania 18940.
c. ESL Inc., 495 Java Drive, Sunnyvale, California 94086.
d. Nelson Export Corporation, 28th Street & Toledo Avenue, Lorain, Ohio 44055.
e. C. E. Niehoff & Co. of Canada, Ltd., 55 Brydon Drive, Rexdale, Ontario, Canada.
f. Optron International, Inc., 1201 Tappan Circle, Carrollton, Texas 75006.
g. Ramsey Corporation, P.O. Box 513, St. Louis, Missouri 63166.
h. Sherwood Refractories Inc., 16601 Euclid Avenue, Cleveland, Ohio 44112.
i. SMP Inc., 29501 Clayton Avenue, Wickliffe, Ohio 4092.
j. TRW Canada Ltd., 250 University Avenue, Toronto 110, Canada.
k. TRW Colorado Electronics, Inc., One Space Park, Redondo Beach, California 90278.
l. TRW Components International Inc., One Space Park, Redondo Beach, California 90278.
m. TRW Controls Corporation, 5610 Parkersburg, Houston, Texas 77036.
n. TRW Datacom Inc., 10880 Wilshire Boulevard, Los Angeles, California.
o. TRW Electronic Supply Co., Inc., 414 North 13th Street, Philadelphia, Pennsylvania 19108.

p. TRW Resistive Products Inc., Newton Industrial Park, Christ Church, Barbados, West Indies.
q. TRW Satellite Communications Inc., 3313 Memorial Parkway S.W., Huntsville, Alabama 35801.
r. TRW Subsea Petroleum Systems, Inc., 9800 Town Park, Houston, Texas 77036.

1. Parent corporation and address of principal office: Tumac Lumber Co., Inc., 806 S.W. Broadway, Portland, Oregon 97205.

2. Wholly-owned subsidiaries which will participate in the operations, and address of their respective principal offices:

(a) Tumac Export Sales Co., 806 S.W. Broadway, Portland, Oregon 97205.

(b) Al Disdero Lumber Co., P.O. Box 42247, 1504 S.E. Woodward Street, Portland, Oregon 97242.

(c) K/D Cedar Supply Co., Inc., 22008 Meekland Avenue, Hayward, California 94541.

(1) Parent corporation and address of principal office: United States Steel Corporation, 600 Grant Street, Pittsburgh, Pennsylvania 15230.

(2) Wholly-owned subsidiaries which will participate in the operations, and address of their respective principal offices:

(a) Alside, Inc., P.O. Box 2010, Akron, Ohio 44309.

(b) USS Novamont, Inc., 600 Grant Street, Pittsburgh, Pennsylvania 15230.

1. Parent corporation: Vaughan & Sons, Inc., P.O. Box 1001, San Antonio, Texas 78294.

2. Wholly owned subsidiaries which will participate in the operations:

Alamo Lumber Company P.O. Box 1001, San Antonio, Texas 78294.

Best Transport, Inc., P.O. Box 1001, San Antonio, Texas 78294.

Agatha L. Mergenovich,

Secretary.

[FR Doc. 80-24788 Filed 8-14-80; 8:45 am]

BILLING CODE 7035-01-80

Binghamton Brick Co., et al.; Intent To Engage in Compensated Intercorporate Hauling Operations

This is to provide notice as required by 49 U.S.C. 10524(b)(1) that the named corporations intend to provide or to use compensated intercorporate hauling operations as authorized in 49 U.S.C. 10524(b).

(1) Parent corporation and address: The Binghamton Brick Co., Inc., P.O. Box 1256, Binghamton, New York 13902.

(2) Wholly-owned subsidiary (ownership 100%): Champlain Brick Company, P.O. Box 267, Hemstreet Park, Mechanicville, New York 12118.

1. Parent corporaiton—City Products Corporation, 1700 South Wolf Road, Des Plaines, Illinois 60018.

2. Wholly-owned subsidiaries of City Products Corporation which will participate in the operations and addresses of their respective principal offices:

A. Coast-to-Coast Stores (Central Organization), Incorporated, 10801 Red Circle Drive, Minnetonka, Minnesota 55343.

B. Huffman-Koos Co., Route 4 at Main Street, North Hackensack, New Jersey 07661.

C. T. G. & Y. Stores Co., 3815 North Santa Fe, Oklahoma City, Oklahoma 73125.

D. Vons Grocery Co., 10150 Lower Azusa Road, El Monte, California 91731.

E. White Stores, Inc., 3910 Call Field Road, Wichita Falls, Texas 76308.

3. Divisions of City Products Corporation which will participate in the operations and addresses of their respective principal offices:

A. American Furniture, 105 North Oregon Street, El Paso, Texas 79901.

B. Barker Bros., 818 West Seventh Street, Los Angeles, California 90017.

C. Ben Franklin, 1700 South Wolf Road, Des Plaines, Illinois 60018.

D. Colby's Home Furnishings, 1001 Skokie Boulevard, Northbrook, Illinois 60062.

1. Parent Corporation and Address of Principal Office: Carrier Corporation, Delaware Corporation (a subsidiary of United Technologies), of Carrier Tower, 120 Madison Street (P.O. Box 4800), Syracuse, New York.

2. Wholly-owned subsidiaries which will participate in the operations, and address of their respective principal offices:

(a) Carrier International Corporation, Town of DeWitt, New York, P.O. Box 4806, Syracuse, New York 13221, Delaware Corporation.

(b) Elliott Overseas Corporation, North Fourth Avenue, Jeannette, Pennsylvania 15644, Delaware Corporation.

(c) Ideal Electric Company, 330 E. First Street, Mansfield, Ohio 44903, Ohio Corporation.

(d) Inmont Corporation, 1133 Avenue of the Americas, New York, New York 10036, Delaware Corporation.

(e) Jenn-Air Corporation, 3035 N. Shadeland Avenue, Indianapolis, Indiana 46226, Delaware Corporation.

(f) Spectrol Electronics Corporation, 17070 East Gale Avenue, City of Industry, California 91745, Delaware Corporation.

1. Parent corporation and address of principal office: Dalgety, Inc., 3055 Clearview Way, San Mateo, California 94402.

2. Wholly-owned subsidiaries which will participate in the operations, and addresses of their respective principal offices:

a. The Martin-Brower Company, 1111 East Touhy Avenue, Des Plaines, Illinois 60018.

b. Dalgety Foods, Inc., 909 Blanco Circle, Salinas, California 93902.

1. Parent corporation and address of principal office: Tenneco Inc., 1010 Milam Street, (P.O. Box 2511), Houston, Texas 77001.

2. Wholly-owned subsidiaries which will participate in the operations, and address of their respective principal offices:

(a) Tenneco Oil Company, 1010 Milam Street, (P.O. Box 2511), Houston, Texas 77001.

(b) Operators, Inc., 16630 Imperial Valley Drive, Suite 147, Houston, Texas 77060.

(c) B & M Oil, Inc., P.O. Box 1243, Nashville, Tennessee 37202.

(d) Blue Flame Gas Corporation, Gal-Ham Building, Bluffton, Indiana 46714.

(e) Direct Oil Corporation, Highway 31, (P.O. Box 1243), Nashville, Tennessee 37202.

(f) Marlin Drilling Co., Inc., Park Tower South, 1333 West Loop South, Suite 780, Houston, Texas 77027.

(g) Mitchell Supreme Fuel Company, 532 Freeman Street, Orange, New Jersey 07050.

(h) Petro-Tex Chemical Corporation, 8600 Park Place Boulevard, (P.O. Box 2584), Houston, Texas 77001.

(i) Q-S Petroleum, Inc., P.O. Box 1243, Nashville, Tennessee 37202.

(j) TLC Oil Company, 92 Walnut Street, (P.O. Box 1867), Hartford, Connecticut 06101.

(k) Red Diamond Oil, Inc., P.O. Box 443, Pickens, South Carolina 29671.

(l) Tennessee Gas Transmission Company, 1010 Milam Street, (P.O. Box 2511), Houston, Texas 77001.

(m) East Tennessee Natural Gas Company, Kingston Pike, (P.O. Box 10245), Knoxville, Tennessee 37919.

(n) Midwestern Gas Transmission Company, 1100 Milam Building, (P.O. Box 2511), Houston, Texas 77001.

(o) Tennessee Gas Pipeline Company, Tenneco Building, (P.O. Box 2511), Houston, Texas 77001.

(p) J. I. Case Company, 700 State Street, Racine, Wisconsin 53404.

(q) Case Power & Equipment Limited, 700 State Street, Racine, Wisconsin 53404.

(r) David Brown Tractors (Canada), Ltd., 17 Vickers Road, Islington, Ontario M9B 1C2, Canada.

(s) Drott Manufacturing Corporation, P.O. Box 1087, Wausau, Wisconsin 54401.

(t) Pryor Foundry, Inc., P.O. Box 549, Pryor, Oklahoma 74361.

(u) Tenneco Automotive, 108 Wilmont Road, Suite 400, Deerfield, Illinois 60015.

(v) Monroe Auto Equipment Company, International Drive, Monroe, Michigan 48161.

(w) Speedy Muffler King, Inc., 108 Wilmot Road, Suite 300, Deerfield, Illinois 60015.

(x) Walker Manufacturing Company, 1201 Michigan Boulevard, Racine, Wisconsin 53402.

(y) The Mechanex Corporation, 3773 South Jason Street, Englewood, Colorado 80110.

(z) Packaging Corporation of America, 1603 Orrington Ave., Evanston, Illinois 60204.

(aa) Tennessee River Pulp & Paper Company, P.O. Box 33, Counce, Tennessee 38326.

(bb) Tenneco Chemicals, Inc., Park 80, Plaza West-1, Saddle Brook, New Jersey 07662.

(cc) Tenneco Chemicals, Foam Division, West 100 Century Road, Paramus, New Jersey 07652.

(dd) Tenneco Chemicals, Organics Division, P.O. Box 365, Piscataway, New Jersey 08854.

(ee) Tenneco Chemicals, Polymers & Plastics Division, P.O. Box 365, Piscataway, New Jersey 08854.

(ff) Newport News Shipbuilding and Dry Dock Company, 4101 Washington Avenue, Newport News, Virginia 23607.

(gg) Greenville Metal Manufacturing, Inc., 4101 Washington Avenue, Newport News, Virginia 23607.

(hh) Newport News Industrial Corporation, 230 41st Street, Newport News, Virginia 23607.

(ii) Tenneco West, Inc., 201 New Stine Road, (P.O. Box 9380), Bakersfield, California 93309.

(jj) Cal-Date Company, 201 New Stine Road, (P.O. Box 9380), Bakersfield, California 93309.

(kk) California Almond Orchards, Inc., 201 New Stine Road, (P.O. Box 9380), Bakerfield, California 93309.

Agatha L. Mergenovich,

Secretary.

[FR Doc. 80-24817 Filed 8-14-80; 8:45 am]

BILLING CODE 7035-01-M

[No. MC-FC-78394]

JUR Corp. d.b.a. Rajor, Inc., and Rajor, Inc.; Authority To Transfer Operating Rights

Decided: July 23, 1980.

The principal expressed in *O'Neill—Control—Sugar Transport, Inc.*, 70 M.C.C. 141 (1956) [that a party which holds authority pursuant to 49 U.S.C. 10928 is a carrier for purposes of determining jurisdiction under 49 U.S.C. 10926] is overruled.

William J. Monheim for petitioners.

By the Commission:

By petition filed March 15, 1980, applicants seek reconsideration of the decision of the Commission, Motor Carrier Board, dated January 18, 1980, which dismissed the application for lack of jurisdiction under 49 U.S.C. 10926.

Applicants seek authority to transfer the operating rights of transferor, set forth in Permits MC-129862 and sub-numbered proceedings thereunder to transferee. Transferee is a non-carrier. However, Jimmy V. Randolph participates in the control of transferee and in the control of California Express, Ltd. which holds temporary authority in MC-145779 (Sub-Nos. 1TA and 2TA).

The Motor Carrier Board dismissed the application relying upon *O'Neill—Control—Sugar Transport, Inc.* 70 M.C.C. 141 (1956) (*O'Neill*), which states that temporary authorizations granted pursuant to 49 U.S.C. 10928 make a party a "carrier" for purposes of 49 U.S.C. 11343. The Motor Carrier Board determined that the applicants had not shown that the combined gross revenues of carrier applicants did not exceed $300,000 for a period of 12 consecutive months ending not more than six months preceding the date of the agreement covering the proposed transaction, and therefore, the proposed transfer was not within the exemption found at 49 U.S.C. 11343(d)(1).

In *O'Neill* the Commission, Division 4, stated that Sugar Transport, Inc., which held a TA pursuant to former section 210a(a) (now section 10928), at the time the transfer application was filed, was a carrier. Since Sugar Transport, Inc. was determined to be a carrier and O'Neill held certificated authority, and the carriers were not within the exemption provided by former section 5, the transaction fell under former section 5 of the Interstate Commerce Act (now 49 U.S.C. 11343-44). The Division approved the control application and stated that the approval would extend to Sugar Transport, Inc., should it acquire permanent status as a carrier upon grant of operating authority in another proceeding.

The changing emphasis by this Commission upon promoting competition and a free economic environment, requires that we reevaluate when a company becomes a carrier for purposes of determining jurisdiction under 49 U.S.C. 10926.

In granting an application filed under 49 U.S.C. 10928 (TA), the only factor considered is a shipper's immediate and urgent need for the service. The Commission does not consider common control or dual operations in this type of proceeding. When granted, the TA is specific in nature; it does not confer any of the rights confirmed in a Certificate of Public Convenience and Necessity or a Permit. The TA holder may not serve points in a commercial zone which are outside the corporate area named. It may not tack the TA operating rights with any other rights to provide a through or a joint line service. The TA may not be leased, sold, or transferred. In the case of a passenger carrier, the TA does not confer the incidental charter rights which are inherent in a permanent authority. Continued effectiveness of the TA is dependent upon the filing of the permanent authority application, and the TA expires upon a grant or denial of that permanent authority application.

By considering a TA holder a carrier for jurisdictional purposes we place the party in the position of illegal common control because the Rules and Regulations Governing Motor Carrier Temporary Authorities under section 10928 make no provision for considering or applying section 11343, prior to institution of, or during operations under, the TA. Additional considerations at the time of the TA application are unduly burdensome at a time when we are endeavoring to promote competition and ease motor carrier entry requirements.

A change in the current policy will help the small company enter the market place, and bring into conformity the enforcement of our rules. Therefore, a party holding only temporary authority under 49 U.S.C. 10928 will not be defined as a "carrier" for the purposes of determining the applicability of 49 U.S.C. 10926 under the exemption set forth at 49 U.S.C. 11343(d)(1), and the transfer rules at 49 CFR Part 1132.

We find:

The transferee holds no authority from this Commission. Transferee's affiliate, California Express Ltd., holds only temporary operating authority, issued pursuant to 49 U.S.C. 10928 and is not considered a carrier. Therefore, the transaction is subject to provisions of 49 U.S.C. 10926 rather than section 11343-44.

Under section 10926(1) a motor carrier's permit may be transferred upon compliance with the Commission's transfer regulations at 49 CFR Part 1132. The transfer complies with the Commission's transfer regulations at 49 CFR Part 1132 and transferee is fit, willing and able to both (a) perform the service authorized under the transferred

operating rights and (b) conform with the provisions of the Interstate Commerce Act (49 U.S.C. Subtitle IV).

This decision will not significantly affect either the quality of the human environment or conservation of energy resources.

It is ordered:

(1) The transfer application is granted and—upon compliance with the conditions stated below—transferee may begin operations under the transferred authority.

(2) The Commission's records will be changed to reflect that applicants consummated this transfer on the 20th day after the effective date of this decision, unless applicants notify the Commission's Office of Proceedings and Bureau of Accounts, in writing, of any failure to consummate as soon as it is discovered, or unless petitions for reconsideration are filed in the manner described in the attached Notice.

(3) Transferee may begin operations under the transferred authority after transferee has notified the appropriate Commission offices, in writing, of its compliance with the applicable statutory and regulatory provisions governing insurance, tariffs, and designation of agents. (*See* 49 U.S.C. 10927, 10761–62, and 10330; *accord* 49 CFR Parts 1043, 1044, and 1300–1310.)

(4) This decision shall be effective September 4, 1980, and transferee may begin operations as soon thereafter as it has complied with the requirements of paragraph 3. However, the transaction may not be consummated until after any petitions for reconsideration have been disposed of. If—by the 20th day after this decision's service date—no petitions for reconsideration have been filed, then the transaction may be consummated at that time.

(5) Notice of this approval will be simultaneously published in the Federal Register.

By the Commission, Chairman Gaskins, Vice Chairman Gresham, Commissioners Stafford, Clapp, Trantum, Alexis and Gilliam. Commissioner Trantum dissenting with a separate expression.

Agatha L. Mergenovich,
Secretary.

Commissioner Trantum (Dissenting)

Although there is only a questionable chance of harm associated with exempting TA "operators" from our acquisition requirements, I believe the Commission's decision is in error. Aside from exempting this specific transaction, the majority's decision establishes that a TA "operator," serving shippers under the regulatory umbrella, is not a "carrier."

49 U.S.C. 10928, states that "the Interstate Commerce Commission may grant a motor carrier * * * temporary authority to provide transportation." This Section is contained in the subchapter concerned with the licensing of *carriers* (other than railroads and ferries). In addition, section 10521(a) states that:

> the Interstate Commerce Commission has jurisdiction over transportation by motor carrier and the procurement of that transportation to the extent that passenger, property, or both, are transported by motor carrier * * *

No differentiation is made between permanent authority and temporary authority in the above references to motor carriers—or the definitions found in section 10102.

The General Counsel concluded in his memorandum No. 78–300 that TA operators are carriers as defined by former section 5 of the Interstate Commerce Act; section (13) stated that "the term 'carrier' means * * * a motor carrier subject to part II" and section 210a(c) provided that "transportation service rendered under such temporary authority shall be subject to all applicable provisions of this part (Part II) and to the rules, regulations, and requirements of the Commission thereunder."

There is simply no place in the Interstate Commerce Act, or the Motor Carrier Act of 1980, that identifies a motor "operator" under a temporary authority as anything but a carrier. The Commission's unwarranted narrowing of the definition of "carrier" is an inappropriate effort to exempt this type of transaction.

Appendix A

Subject to the conditions specified above, this decision authorizes the transfer of the transferor's operating authority set forth in Permits MC–129862 (Sub-Nos. 1, 2, 3, 4, 5, 11, 12, 15, 17, and 19), issued April 9, 1975, November 4, 1974, February 10, 1977, August 26, 1975, November 26, 1975, March 9, 1977, February 27, 1978, February 24, 1978, September 26, 1978, and December 21, 1978, respectively, authorizing operations as over irregular routes, as follows:

MC 129862 (Sub-1): *Plumbing fixtures and supplies* and *air-conditioning and heating units,* (except articles which, because of size, shape or weight, require the use of special equipment or special handling), from St. Louis, Mo., Port Huron, Mich., Philadelphia, Greesburg, and York, Pa., Braintree, Mass., Houston, Tex., East St. Louis, Ill., and Fort Smith, Ark., to points in Arizona, California, and Nevada; and *Returned shipments* of the above-specified commodities, from points in Arizona, California, and Nevada, to St. Louis, Mo., Port Huron, Mich., Philadelphia, Greensburg, and York, Pa., Braintree, Mass., Houston, Tex., East St. Louis, Ill., and Fort Smith, Ark. *Plumbing fixtures and supplies,* from Kohler, Wis., Spartanburg, S.C., and Camden, N.J., to points in Arizona, California, and Nevada, with no transportation for compensation on return except as otherwise authorized. *Air-conditioning units,* from Maspeth, Long Island, N.Y., to points in Arizona, California, and Nevada, with no transportation for compensation on return except as otherwise authorized. Restriction: The operations authorized herein are limited to a transportation service to be performed, under a continuing contract, or contracts, with York Division of Borg-Warner, of York, Pa.

MC 129862 (Sub-2): (1) *Electronic instruments and components, tables and stands* for electronic instruments and components, and *toys and games,* other than coin-operated, from Greeneville and Jefferson City, Tenn., to Dallas, Tex., Pasco and Seattle, Wash., San Francisco and Torrance, Calif., Denver, Colo., Phoenix, Ariz., Portland, Oreg., and Salt Lake City, Utah, with no transportation for compensation on return except as otherwise authorized. Between Greeneville and Jefferson City, Tenn., on the one hand, and, on the other, Nogales, Ariz. (2) *Equipment, materials, and supplies* used in the manufacture and production of the commodities in (1) above (except commodities in bulk, in tank vehicles), from Los Angeles and Long Beach, Calif., and points in San Francisco, San Mateo, Alameda, and Contra Costa Counties, Calif., to Greeneville and Jefferson City, Tenn. Restriction: The operations authorized in part (2) above is restricted to transportation in foreign commerce only. Restriction: The operations authorized herein are limited to a transportation service to be performed, under a continuing contract, or contracts, with The Magnavox Company, Inc., of Fort Wayne, Ind.

MC 129862 (Sub-3): (1) *Running gears, hitches,* and *fenders* used for mobile homes, motor homes, trailers and recreational vehicles, from Anaheim and Los Angeles, Calif., Tiffin, Ohio, and Dayton, Oreg., to points in the United States (except Alaska and Hawaii and with no service to California when shipments originate at Los angeles and Anaheim); and (2) *Components, materials, and supplies* used in the manufacture, production, and assembly

of the commodities described in (1) above, from points in the United States (except Alaska and Hawaii), to Anaheim, and Los Angeles, Calif., Tiffin, Ohio, and Dayton, Oreg. (3) *Electric and gas refrigerators* for mobile homes, motor homes, and trailers, and *parts* for such refrigerators, from Baltimore, Md., Elizabeth, N.J., Elkhart, Ind., Dayton, Oreg., and Los Angeles and Anaheim, Calif., to points in the United States (except Alaska and Hawaii and with no service to California when shipments originate at Los Angeles and Anaheim), with no transportation for compensation on return except as otherwise authorized. Restriction: The operations authorized hereinabove are limited to a transportation service to be performed under a continuing contract, or contracts, with Essick Manufacturing Division of A-T-O, Inc. (4) *Outdoor advertising metal poster panels, school furniture, lockers, portable filing cabinets, crane cabs, crane cab components, farm and construction machinery cabs and components* for farm and construction machinery cabs, from Tiffin, Ohio, to points in the United States (except Alaska and Hawaii); and (5) *Components, materials, and supplies* used in the manufacture, production, and assemply of the commodities described in (4) above, from points in the United States (except Alaska and Hawaii), to Tiffin, Ohio. Restriction: The operations authorized in (4) and (5) above are limited to a transportation service to be performed under a continuing contract, or contracts with Tiffin Metal Products Division of A-T-O, Inc. (6) *Concrete mixers, mortar mixers, machines* used for applying concrete, mortar, plaster, fireproofing and similar materials, *road rollers, saws, motors, commercial air cooling systems and their pads,* and *air make-up heating and cooling equipment,* from Los Angeles, Calif., and Elizabeth, N.J., to points in the United States (except Alaska and Hawaii); and (7) *Components, materials, and supplies* used in the manufacture, production and assembly of the commodities described in (6) above, from points in the United States (except Alaska and Hawaii), to Los Angeles, Calif., and Elizabeth, N.J. (8) *Air coolers* and *air make-up heating and cooling equipment,* from Little Rock, Ark., to points in the United States (except Alaska and Hawaii); and (9) *Components, materials, and supplies* used in the manufacture, production, and assembly of the commodities described in (8) above. From points in the United States (except Alaska and Hawaii), to Little Rock, Ark. (10) *Machinery parts,* from Los Angeles, Calif., to Little Rock, Ark., and Elizabeth, N.J., with no transportation for compensation on return except as otherwise authorized. Restriction: The operations authorized in (6) through (10) above are limited to a transportation service to be performed under a continuing contract, or contracts, with Essick Manufacturing Division of A-T-O, Inc. (11) *Fire extinguishers* (charged and not charged) portable hand and wheeled, *fire extinguisher compounds, brass fire hose nozzles, brass fire hose couplings, brass valves and fittings, brass castings, brass fire engine accessories and equipment,* and *firehose,* from Ranson and Charles Town, W. Va., and Charlottesville, Va., to points in the United States (except Alaska and Hawaii); and (12) *Components, materials, and supplies* used in the manufacture, production, and assembly of the Charlottesville, Va. (13) *Fire hose* (with or without brass nozzles), *brass hose couplings* and *brass valves,* from North Bergen, N.J., to points in the United States (except Alaska and Hawaii); and (14) *Components, materials, and supplies* used in the manufacture, production, and assembly of the commodities described in (13) above, from points in the United States (except Alaska and Hawaii), to North Bergen, N.J. Restriction: The operations authorized in (11) through (14) above are limited to a transportation service to be performed under a continuing contract, or contracts with Badger-Powhatan-Blaze Buard Division of A-T-O, Inc. Restriction: The operations authorized herein are restricted against the transportation of commodities in bulk, in tank vehicles.

MC 129862 (Sub-4): *Air conditioning and heating units, component parts,* and *materials and supplies* utilized in the manufacture, sale, and distribution of the described commodities (except commodities in bulk and those which by reason of size or weight require the use of special equipment), between Madisonville, Ky., on the one hand, and, on the other, points in Arizona, California, and Nevada. Restriction: The operations authorized herein are limited to a transportation service to be performed under a continuing contract, or contracts, with York Division of Borg-Warner Corporation, of York, Pa.

MC 129862 (Sub-5): *Athletic, gymnastic, aquatic and sporting goods, parts, and accessories* of the foregoing commodities, *adhesives, rubber tire treads, hardware, advertising material,* and *materials, equipment and supplies* utilized in the manufacture, sale, and distribution of the described commodities, from Santa Ana, Calif., to Arlington and Houston, Tex., Atlanta, Decatur, and Griffin, Ga., Birmingham and Mobile, Ala., Bridgeton, Mo., Edison and Maywood, N.J., Elk Grove Village and River Grove, Ill., Nashville, Tenn., New Orleans, La., Shelby, Ohio, and Tampa, Fla., with no transportation for compensation on return except as otherwise authorized. From points in Texas, and points in and east of Minnesota, Iowa, Missouri, Arkansas, and Louisiana, to Santa Ana, Calif., with no transportation for compensation on return except as otherwise authorized. Restriction: The operations authorized herein are subject to the following conditions: The authority granted herein is restricted against the transportation of commodities in bulk and those which by reason of size or weight require the use of special equipment. The operations authorized herein are limited to a transportation service to be performed, under a continuing contract, or contracts, with AMF Volt, Inc., of Santa Ana, Calif.

MC 129862 (Sub-11): *Athletic, gymastic, aquatic,* and *sporting goods, parts and accessories* for the foregoing commodities, *adhesives, rubber, tire treads, hardware, advertising materials* and *materials, equipment and supplies* utilized in the manufacture, sale and distribution of the described commodities, from Santa Ana, Calif., to points in and east of Minnesota, Iowa, Nebraska, Kansas, Oklahoma, and Texas, with no transportaiton for compensation on return except as otherwise authorized. *Aquatic equipment and accessories* and *game and sporting goods balls,* from ports of entry on the United States-Republic of Mexico Boundary line of Brownsville, El Paso, and Laredo, Tex., to Chicago and Elk Grove Village, Ill., and Maywood, N.J., with no transportation for compensation on return except as otherwise authorized. Restriction: The operations authorized herein are limited to a transportation service to be performed, under a continuing contract, or contracts, with AMF Voit, Inc.

MC 129862 (Sub--2): *Air conditioning* and *heating units* (except commodities which, by reason of size or weight require the use of special equipment), from Jonesville, Mich., Madisonville, Ky., and York, Pa., to points in Colorado, Florida, Georgia, New Mexico, Oregon, Texas, Utah, and Washington, with no transportation for compensation on return except as otherwise authorized. From Jonesville, Mich., to points in Arizona, California and Nevada, with no transportation for compensation on return except as otherwise authorized. Restriction: The operations authorized

herein are limited to a transportation service to be performed, under a continuing contract, or contracts, with York Division of Borg-Warner Corporation of York, Pa.

MC 129862 (Sub-15): *Electronic instruments* and *components, tables and stands* for electronic instruments and *components,* and *toys and games* (except those which are coin operated), from Greeneville and Jefferson City, Tenn., to points in Florida, with no transportation for compensation on return except as otherwise authorized. Restriction: The operations authorized herein are limited to a transportation service to be performed under a continuing contract, or contracts, with The Magnavox Company, of Fort Wayne, Ind.

MC 129862 (Sub-17): *Air conditioning and heating units* (except commodities which by reason of size or weight require the use of special equipment), from Hopkinsville, KY, and Newark, DE to points in Arizona, California, Colorado, Florida, Louisiana, Nevada, New Mexico, Oregon, Texas, Utah, and Washington. Restriction: The operations authorized herein are limited to a transportation service to be performed under a continuing contract(s) with York Division of Borg-Warner Corporation, of York, PA.

MC 129862 (Sub-19): *Air conditioning and heating units* (except commodities which because of size or weight require the use of special equipment), from points in Davidson County, TN, to points in Arizona, California, Colorado, Florida, Louisiana, Montana, Nebraska, Nevada, North Dakota, Oregon, South Dakota, Utah and Washington. Restriction: The authority granted herein is limited to a transportation service to be performed under a continuing contract(s), with Heil-Quaker Corporation, of LaVergne, TN.

[FR Doc. 80-24802 Filed 8-14-80; 8:45 am]

BILLING CODE 7035-01-M

[AB 10(SDM)]

Norfolk & Western Railway Co.; Amended System Diagram Map

Notice is hereby given that, pursuant to the requirements contained in Title 49 of the Code of Federal Regulations, § 1121.23, that the Norfolk and Western Railway Company has filed with the Commission its amended color-coded system diagram map in docket No. AB 10(SDM). The Commission on August 1, 1980, received a certificate of publication as required by said regulation which is considered the effective date on which the system diagram map was filed.

Color-coded copies of the map have been served on the Governor of each state in which the railroad operates and the Public Service Commission or similar agency and the State designated agency. Copies of the map may also be requested from the railroad at a nominal charge. The maps also may be examined at the office of the Commission, Section of Dockets, by requesting docket No. AB 10 (SDM).

Agatha L. Mergenovich,

Secretary.

[FR Doc. 80-24795 Filed 8-14-80; 8:45 am]

BILLING CODE 7035-01-M

[Finance Docket No. 29372F]

Oklahoma, Kansas & Texas Railroad Co.—Acquisition and Operation—Over Chicago, Rock Island & Pacific Railroad Co.

Oklahoma, Kansas and Texas Railroad Company (DKT) represented by Mr. W. A. Thie, 701 Commerce Street, Dallas, TX 75202, hereby give notice that on the 2nd day of June, 1980, it filed with the Interstate Commerce Commission at Washington, DC, an application pursuant to 49 U.S.C. 10901 for a decision approving and authorizing it to operate on an interim basis those certain lines of railroad owned by the Chicago, Rock Island and Pacific Railroad Company (Rock Island).

Applicant is seeking to acquire and operate the following lines of the Rock Island:

I. Main line (A) Herington-Ft. Worth line, a distance of 439.5 miles in Dickinson, Marion, Butler, Harvey, Sedgwick, and Sumner Counties, KS; Grant, Garfield, Kingfisher, Canadian, Grady, Stephens, and Jefferson Counties, OK; Montague, Wise, and Tarrant Counties, TX, including assignment of Trustee's right of use of FWD trackage between Purina Junction and Tower 55 in Ft. Worth. (B) Ft. Worth-Dallas line, a distance of 34 miles in Tarrant and Dallas Counties, TX. (C) Herington-Topeka line, a distance of 81.8 miles in Dickinson, Morris, Wabaunsee, and Shawnee Counties, KS.

II. Branch lines (A) The El Reno-Oklahoma City line, a distance of 16.9 miles in Canadian and Oklahoma Counties, OK. (B) the Salina Branch line, a distance of 27.4 miles in Dickinson County, KS, together with an assignment of the right of use over the line of the Union Pacific Railroad Company, extending for a distance of 20.0 miles in Salina County, KS, and including assignment of right of use over the AT&SF tract (0.4 mile) in Abilene. (C) the Atchison Branch line, a distance of 111.6 miles from Topeka to Atchison, KS, via St. Joseph, MO, including the use of interchange and yard facilities at Topeka, St. Joseph and Atchison, and the trackage rights used by the Rock Island to form a continuous service route. (D) the Ponca City line, a distance of 26.1 miles at North Enid, OK, on the southern Division main line to Billings. (E) the part of the Mangum Branch line from Chickasha, to Anadarko, thence south on the Anadarko line to Richards Spur, a distance of 42.8 miles.

Applicant is also seeking to acquire the operating rights of the Rock Island in the following jointly operated properties: (A) Rock Island rights of use of the Wichita Union Terminal Railway Company and the Wichita Terminal Association, all located in Wichita, KS, and (B) Rock Island right to interchange with and use the properties of the Great Southwest Railroad Company located in Grand Prairie, TX.

Pursuant to the provisions of the Interstate Commerce Act, as amended, the proceeding will be handled without public hearings unless comments in either support or opposition to such application in the form of verified statements are filed with the Secretary, Interstate Commerce Commission, 12th and Constitution Avenue, N.W., Washington, D.C. 20423 and the aforementioned counsel for applicant on or before August 25, 1980. Any interested party is entitled to recommend to the Commission that it approve, disapprove, or take any other specified action with respect to such application. No replies will be sanctioned.

Agatha L. Mergenovich,

Secretary.

[FR Doc. 80-24800 Filed 8-14-80; 8:45 am]

BILLING CODE 7035-01-M

[Service Order No. 1344; I.C.C. Order No. 65; Amdt. No. 3]

Rerouting Traffic; All Railroads

To: All Railroads;

Upon further consideration of I.C.C. Order No. 65, and good cause appearing therefor:

It is ordered,

I.C.C. Order No. 65 is amended by substituting the following paragraph (g) for paragraph (g) thereof:

(g) *Expiration date.* The order shall expire at 11:59 p.m., September 30, 1980, unless otherwise modified, amended or vacated.

Effective date. This order shall become effective at 11:59 p.m., July 31, 1980.

This amendment shall be served upon the Association of American Railroads, Car Service Division, as agent of all railroads subscribing to the car service and car hire agreement under the terms of that agreement, and upon the American Short Line Railroad Association. A copy of this amendment shall be filed with the Director, Office of the Federal Register.

Issued at Washington, D.C., July 30, 1980.
Interstate Commerce Commission.
Joel E. Burns,
Agent.
[FR Doc. 80-24793 filed 8-14-80; 8:45 am]
BILLING CODE 7035-01-M

[Exception No. 1 to Service Order No. 1464]

Railroad Car Service Orders; All Railroads

Pursuant to the authority vested in the Railroad Service Board in 49 U.S.C. 10304–10305 and 11121–11126, the following exception to Service Order No. 1464 is authorized.

This exception applies only to flat and gondola cars bearing the reporting marks, RI and ROCK, loaded with surplus material, scrap rail, iron and wrecked cars of the Chicago, Rock Island and Pacific Railroad Company, Debtor (William M. Gibbons, Trustee) (RI) from those portions of the former RI system which are without rail service as provided by interim operators.

These cars will not be subject to car hire charges while on foreign lines. Cars will be billed to be returned empty to the RI via reverse of loaded route, or to a location (specified by the RI) where cars will be accepted short of origin.

The bills of lading and waybills shall bear the following endorsement:

"Car hire charges are waived on this shipment and this car is to be returned empty to RI via reverse of loaded route, or to [*station*], authority of Exception No. 1 to Service Order No. 1464."

Effective 12:01 a.m., July 31, 1980.

Expires 11:59 p.m., August 31, 1980, unless modified, amended or vacated by order of this Commission.

By the Commission, Railroad Service Board, members Joel E. Burns, Robert S. Turkington and John H. O'Brien.

Joel E. Burns,
Chairman, Railroad Service Board.
[FR Doc. 80-24794 Filed 8-14-80; 8:45 am]
BILLING CODE 7035-01-M

[ExParte No. 241; Rule 19; Second Revised Exemption No. 173]

All Railroads; Car Service Rules

Upon further consideration of Revised Exemption No. 143 issued January 24, 1979.

It is ordered, That, under authority vested in me by Car Service Rule 19, Revised Exemption No. 143 to the Mandatory Car Service Rules ordered in Ex Parte No. 241 is amended to expire at 11:59 p.m., August 24, 1980.

This amendment shall become effective July 31, 1980.

Issued at Washington, D.C., July 29, 1980.
Interstate Commerce Commission.
Joel E. Burns,
Agent.
[FR Doc. 80-24792 Filed 8-14-80; 8:45 am]
BILLING CODE 7035-0-M

[Ex Parte No. 241; Rule 19; Second Revised Exemption No. 173]

Consolidated Rail Corp., et al.; Exemption Under Mandatory Railroad Car Service Orders

To all Railroads:

It appearing, That the railroads named herein own numerous plain gondola cars, 61-ft. in length or longer; that under present conditions, there are surpluses of these cars on their lines; that return of these cars to the car owners would result in their being stored idle; that such cars can be used by other carriers for transporting traffic offered for shipments to points remote from the car owners; and that compliance with Car Service Rules 1 and 2 prevents such use of these cars, resulting in unnecessary loss of utilization of such cars.

It is ordered, That, pursuant to the authority vested in me by Car Service Rule 19, plain gondola cars, 61-ft. in length or longer, described in the Official Railway Equipment Register, ICC-RER No. 6410-E, issued by W. J. Trezise, or successive issues thereof, as having mechanical designation "GB," which are 61-ft. in length or longer, and which bear the reporting marks listed below, may be used without regard to the requirements of Car Service Rules 1 and 2.

Consolidated Rail Corporation
Reporting Marks: BCK-CNJ-CR-DLW-EL-ERIE-LV-NH-NYC-PE-PAE-PC-PCA-PRR-RDG-TOC-RR
Southern Railway System
Reporting Marks: SOU-CG-NS-SA-TAG
St. Louis-San Francisco Railway Company [1]
Reporting Marks: SLSF

[1] Addition.

Effective August 1, 1980, and continuing in effect until 11:59 p.m., August 24, 1980.

Issued at Washington, D.C., July 30, 1980.
Interstate Commerce Commission.
Joel E. Burns,
Agent.
[FR Doc. 80-24803 Filed 8-14-80; 8:45 am]
BILLING CODE 7035-01-M

DEPARTMENT OF LABOR

Employment and Training Administration

Reallocation of Funds Under Title II-D of The Comprehensive Employment and Training Act

AGENCY: Employment and Training Administration, Labor.

ACTION: Reallocation of Funds Under Title II-D of the Comprehensive Employment and Training Act (CETA).

SUMMARY: Pursuant to 20 CFR 676.47, the Department of Labor announces the redistribution of funds reallocated under Title II-D of CETA.

FOR FURTHER INFORMATION CONTACT: Robert Anderson, Administrator Office of Comprehensive Employment Development, 601 D Street, N.W., Room 5014, Washington, D.C. 20213, Telephone: 202-376-6254.

SUPPLEMENTARY INFORMATION: The Department of Labor has determined to provide the following CETA prime sponsors the amounts indicated of reallocated Title II-D funds. The Department of Labor reviewed the operations of these prime sponsors and determined that the prime sponsors needed and will be able to effectively utilize the amounts indicated prior to the end of Fiscal Year 1980.

Title II-D

Region I

None

Region II

None

Region III

Centre County, Pennsylvania—$25,000
Fayette County, Pennsylvania—$160,000
Beaver County, Pennsylvania—$45,000
Lancaster County, Pennsylvania—$125,000
Lycoming/Clinton Consortium, Pennsylvania—$100,000
BOS, Pennsylvania—$283,576

Region IV

None

Region V

Montgomery/Preble Consortium, Ohio—$42,528

Region VI

Central Arkansas Consortium—$250,000
City of Baton Rouge, Louisiana—$250,000
Jefferson Parish, Louisiana—$150,000
Hidalgo/Willacy Consortium, Texas—$377,110

Region VII

Topeka/Shawnee Consortium, Kansas—$31,100
City of Wichita, Kansas—$70,000
Davenport/Scott Consortium, Iowa—$60,000
City of Omaha, Nebraska—$91,200

Region VIII

None

Region IX

Long Beach City, Califorina—$321,000
Placer County, California—$171,800
American Samoa—$165,500
Santa Clara County, California—$170,000

Region X

Anchorage, Alaska—$300,000
Clark County, Washington—$144,064
City of Portland, Oregon—$152,467
Multnomah/Washington, Oregon—$109,777

Signed at Washington, D.C., this 31st day of July 1980.

Charles B. Knapp,

Deputy Assistant Secretary for Employment and Training.

[FR Doc. 80-24626 Filed 8-14-80; 8:45 am]

BILLING CODE 4510-30-M

Reallocation of Funds Under Title II-D of The Comprehensive Employment and Training Act

AGENCY: Employment and Training Administration, Labor.

ACTION: Final Notice of Funds Reallocated Under Title II-D of the Comprehensive Employment and Training Act (CETA).

SUMMARY: Pursuant to 20 CFR 676.47, the Department of Labor announces the reallocation of Title II-D funds in the amounts and from the prime sponsors indicated below.

FOR FURTHER INFORMATION CONTACT: Robert Anderson, Administrator, Office of Comprehensive Employment Development, 601 D Street, N.W., Room 5014, Washington, D.C. 20213, Telephone: 202-376-6254.

SUPPLEMENTARY INFORMATION: The Department of Labor determined, by reviewing actual enrollments with planned enrollments and rates of expenditures, that the CETA programs listed below were underutilizing available funds. The prime sponsors were provided with an opportunity to increase their performance before a final decision was made with respect to reallocation. The respective Governors, the general public and other prime sponsors were advised of the proposed reallocation of funds in the May 30, 1980, Federal Register.

At the end of 30 days from the date of notice to the prime sponsors, the Department again reviewed the prime sponsors' enrollments. The Department found, in the case of the prime sponsors listed below, that the amount of funds indicated for each prime sponsor could not effectively be utilized by the prime sponsor prior to the end of Fiscal Year 1980. As a result, the Department took final reallocation actions with respect to these prime sponsors. Prime sponsors which were listed in the May 30, 1980, Federal Register, and which are not listed below, were found to have improved their performance to the point where no reallocations were required.

Title II-D

Region I

None

Region II

None

Region III

Bucks County, Pennsylvania—$738,576

Region IV

Hillsborough County, Florida—$79,910
Balance of State, Florida—$240,100
Gwinnett County, Georgia—$31,356
City of Charlotte, North Carolina—$45,920
Balance of State, Tennessee—$421,383
Seminole County—$37,666

Region V

Columbus/Franklin Consortium, Ohio—$42,528

Region VI

Oklahoma City Consortium—$250,000
Tulsa Consortium, Oklahoma—$150,000
City of Dallas, Texas—$351,000
North Texas State Regional Consortium—$58,308
Permian Basin Consortium, Texas—$217,802

Region VII

Linn County, Iowa—$48,400
Woodbury County, Iowa—$102,800
Kansas City/Wyandotte Consortium, Kansas—$101,100

Region VIII

None

Region IX

Stanislaus County, California—$299,490
Shasta County, California—$52,280
Ventura County, California—$1,300,000
Arizona Balance of State—$800,000
Hawaii Balance of State—$336,601

Region X

Balance of State, Oregon—$444,064

Signed at Washington, D.C., this 31st day of July 1980.

Charles B. Knapp,

Deputy Assistant Secretary for Employment and Training.

[FR Doc. 80-24627 Filed 8-14-80; 8:45 am]

BILLING CODE 4510-30-M

Voluntary Reallocation of Funds Under Title II-D of The Comprehensive Employment and Training Act

AGENCY: Employment and Training Administration, Labor.

ACTION: Final Notice of the Voluntary Reallocation of Funds Under Title II-D of the Comprehensive Employment and Training Act (CETA).

SUMMARY: Pursuant to 20 CFR 676.47, the Department of Labor announces the voluntary reallocation of Title II-D funds in the amount and from the prime sponsor indicated below.

FOR FURTHER INFORMATION CONTACT: Robert Anderson, Administrator, Office of Comprehensive Employment Development, 601 D Street, N.W., Room 5014, Washington, D.C. 20213, Telephone: 202-376-6254.

SUPPLEMENTARY INFORMATION: The prime sponsors listed below advised the Department of Labor that it had excess funds available under Title II-D of its Fiscal Year 1980 CETA grant and that it would be unable to effectively utilize these funds prior to the end of Fiscal Year 1980. It further advised that it was agreeable to the voluntary reallocation of these funds.

The Department of Labor Regional Office in Seattle determined that the prime sponsor had made every effort to utilize the available funds. However, the prime sponsor has been unable to recruit a sufficient number of individuals which meet the required eligibility requirements. The Governor, the general public and other prime sponsors were provided with 30 days notice to provide comments to the Regional Office regarding the reallocation of these funds.

BOS—Oregon—$262,244

Signed at Washington, D.C., this 31 day of July 1980.

Charles B. Knapp,

Deputy Assistant Secretary for Employment and Training.

[FR Doc. 80-24628 Filed 8-14-80; 8:45 am]

BILLING CODE 4510-30-M

Comprehensive Employment and Training Act (CETA) Wage Adjustment Index; Correction

AGENCY: Employment and Training Administration, Labor.

ACTION: Notice, correction.

SUMMARY: This notice promulgates a correction to the CETA wage adjustment index for Fiscal Year 1981 as required under Section 122(i)(3) of the Comprehensive Employment and Training Act, and published in the Federal Register dated May 15, 1980. The index is to be used by CETA prime sponsors for planning purposes only. A final CETA wage adjustment index for 1981 will be published in the Federal Register prior to October 1, 1980.

FOR FURTHER INFORMATION CONTACT: Mr. Robert Anderson, Administrator, Office of Comprehensive Employment Development, U.S. Department of Labor, 601 D Street, NW., Washington, D.C. 20213, Telephone (202) 376-6254.

SUPPLEMENTARY INFORMATION: The wage adjustment index issued May 15, 1980, for Fiscal Year 1981 planning purposes, did not take into consideration the Federal minimum wage rate increase for 1981. Therefore in accordance with 29 CFR 676.26-1(c)(3) of the CETA regulations, the average annual wage rate for PSE participants in Fiscal Year 1981 shall not be adjusted below the level of $7,665. The figure of $7,665 shall be used for planning purposes instead of any figure under $7,665 contained in the Federal Register publication under the column "Average Wage."

Dated: August 8, 1980.

Ernest G. Green,

Assistant Secretary for Employment and Training.

[FR Doc. 80-24782 Filed 8-14-80; 8:45 am]

BILLING CODE 4510-30-M

[Docket No. M-80-70-M]

Carey Salt; Petition for Modification of Application of Mandatory Safety Standard

Carey Salt, 1800 Carey Boulevard, Hutchinson, Kansas 67501, has filed a petition to modify the application of 30 CFR 57.19-124 (wire ropes) to its salt mine located in Reno County, Kansas. The petition is filed under section 101(c) of the Federal Mine Safety and Health Act of 1977.

A summary of the petitioner's statements follows:

1. The standard requires that hoist ropes be cut in a certain fashion, and then reinstalled, at least once a year.

2. Petitioner states that in the Carey Salt Mine, a factory-installed socket is superior to a field-installed socket because petitioner has neither the experience nor facilities to make a socket installation.

3. Petitioner's modification involves using a factory-installed socket that is inspected daily. The hoist rope near the socket is cleaned and greased weekly; the hoist rope is tested in a non-destructive manner twice yearly; and a new hoist rope is installed approximately every four years.

4. Petitioner states the above modification offers the same protection as does the standard.

Request for Comments

Persons interested in this petition may furnish written comments on or before September 15, 1980. Comments must be filed with the Office of Standards, Regulations and Variances, Mine Safety and Health Administration, Room 627, 4015 Wilson Boulevard, Arlington, Virginia 22203. Copies of the petition are available for inspection at that address.

Dated: August 8, 1980.

Frank A. White,

Director, Office of Standards, Regulations and Variances.

[FR Doc. 80-24779 Filed 8-14-80; 8:45 am]

BILLING CODE 4510-43-M

[Docket No. M-80-72-M]

Homestake Mining Co.; Petition for Modification of Application of Mandatory Safety Standard

Homestake Mining Company, P.O. Box 875, Lead, South Dakota 57754, has filed a petition to modify the application of 30 CFR 57.4-27 (fire extinguishers for mobile equipment) to its Homestake Mine located in Lawrence County, South Dakota. The petition is filed under section 101(c) of the Federal Mine Safety and Health Act of 1977.

A summary of the petitioner's statements follows:

1. The standard requires the operator to provide suitable fire extinguishers on all self-propelled mobile equipment.

2. Petitioner requests that battery-powered rail-mounted locomotives be excluded from this standard because:

(a) The only combustible material on the locomotive is the battery-cell to cable-grid insulation and the plastic jars which contain battery cells. If this material catches fire, a standard fire extinguisher is useless because the equipment must be flooded with water, and

(b) A fire extinguisher would have to be mounted in the already cramped locomotive cab.

3. Petitioner states that, unless a special stored-pressure extinguisher were used, locomotive vibration would cause dry chemicals in fire extinguishers to settle and cake, making the units inoperable. A stored-pressure extinguisher in the close proximity of a locomotive would diminish miner safety.

4. For the above reasons, petitioner requests a modification of the standard.

Request for Comments

Persons interested in this petition may furnish written comments on or before September 15, 1980. Comments must be filed with the Office of Standards, Regulations and Variances, Mine Safety and Health Administration, Room 627, 4015 Wilson Boulevard, Arlington, Virginia 22203. Copies of the petition are available for inspection at that address.

Dated: August 8, 1980.

Frank A. White,

Director, Office of Standards, Regulations and Variances.

[FR Doc. 80-24780 Filed 8-14-80; 8:45 am]

BILLING CODE 4510-43-M

Mine Safety and Health Administration

[Docket No. M-80-109-C]

Consolidation Coal Co., Petition for Modification of Application of Mandatory Safety Standard

Consolidation Coal Company, Consol Plaza, Pittsburgh, Pennsylvania 15241 has filed a petition to modify the application of 30 CFR 75.305 (weekly examinations for hazardous conditions) to its Maitland Mine located in McDowell County, West Virginia. The petition is filed under section 101(c) of the Federal Mine Safety and Health Act of 1977.

A summary of the petitioner's statements follows: 1. Entries at the mine were driven more than 50 years ago and timbers were used for most of the roof support. These timbers have deteriorated, resulting in numerous mine falls which have left the return air courses virtually impassible and extremely hazardous to travel and examine.

2. These falls have had no effect on the velocity or quantity of air passing through the return aid courses.

3. The return airways are not designated as return escapeways.

4. As an alternate method to travelling these hazardous return air courses, petitioner proposes to: a. Establish two monitoring air stations and maintain each station and its approach in safe condition;

b. Conduct examinations daily of air quality, quantity and direction by means approved by the Secretary;

c. Record the date, time and results of each examination in a book at each station as well as in a book to be kept

on the surface and made available to all interested parties;

d. Not allow methane or other harmful, noxious, or poisonous gases to accumulate in these return air courses in excess of legal limits. An immediate investigation will be conducted if an increase in methane of 0.5 per centum above the last reading is detected or the air quality at any of the checking points indicates a reduction of air quantity of 10 percent.

5. Petitioner states that the proposed alternative method will provide the same degree of safety to the miners affected as that afforded by the standard.

Request for Comments

Persons interested in this petition may furnish written comments on or before September 15, 1980. Comments must be filed with the Office of Standards, Regulations and Variances, Mine Safety and Health Administration, Room 627, 4015 Wilson Boulevard, Arlington, Virginia 22203. Copies of the petition are available for inspection at that address.

Dated: August 6, 1980.

Frank A. White,

Director, Office of Standards, Regulations and Variances.

[FR Doc. 80-24036 Filed 8-14-80; 8:45 am]

BILLING CODE 4510-43-M

[Docket No. M-80-87-M]

Domtar Industries, Inc.; Petition for Modification of Application of Mandatory Safety Standard

Domtar Industries, Inc., Sifto Salt Division, P.O. Box 7212, Montreal, Canada, H3C 3M3 has filed a petition to modify the application of 30 CFR 57.21-90 (gassy mines—illumination) to its Cote Blanche Mine located in St. Mary Parish, Lousiana, in accordance with section 101(c) of the Federal Mine Safety and Health Act of 1977.

A summary of the petitioner's statements follows: 1. The petitioner is mining domal salt. Rooms and pillars are large, and the strata is relatively impermeable to gas.

2. The petitioner states that its mine is less prone to blowouts (gas outbursts) than any other domal type salt mine declared gassy, both in numbers and magnitude of blowouts. Blowout cavities are oriented vertically, and they can be identified and avoided. Blowout avoidance has been demonstrated to be particularly successful at the petitioner's mine.

3. As an alternative to the application of 30 CFR 57.21-90, the petitioner proposes to apply 30 CFR 57.21-90 only to areas beyond the last open crosscut of the petitioner's mine. The petitioner claims that the safety of miners is equally secured by applying the mandatory safety standard only to areas beyond the last open crosscut.

4. A number of safeguards are listed as follows: a. A minimum of eight methane monitor sensing devices will be located in the mine. At least one of these will be placed to effectively monitor any area to be blasted.

b. Blasting will be done by a competent person with all miners on the surface.

c. Before reentering the mine, monitors located on the surface will provide miners with verification of blast effectiveness and of methane concentrations detected by underground sensors. In addition, competent persons will monitor exhaust air from the mine. Mine crews and nonpermissible equipment will not enter active workings if the methane concentration is 1.0 percent or more.

d. All mobile equipment, either permissible or nonpermissible, taken past the last open crosscut shall have a working methane monitor installed, with both visible and audible warnings.

e. All drills, undercutters and personnel carriers beyond the last open crosscut shall be maintained in a permissible condition.

f. Nonpermissible equipment will not be permitted in entries where drilling or undercutting is in progress.

5. The petitioner alleges that in conjunction with other requested modifications, the proposed modification will guarantee miners no less protection than that afforded by the standard.

Request for Comments

Persons interested in this petition may furnish written comments on or before September 15, 1980. Comments must be filed with the Office of Standards, Regulations and Variances, Mine Safety and Health Administration, Room 627, 4015 Wilson Boulevard, Arlington, Virginia 22203. Copies of the petition are available for inspection at that address.

Dated: August 5, 1980.

Frank A. White,

Director, Office of Standards, Regulations and Variances.

[FR Doc. 80-24029 Filed 8-14-80; 8:45 am]

BILLING CODE 4510-43-M

[Docket No. M-80-82-M]

Domtar Industries, Inc.; Petition for Modification of Application of Mandatory Safety Standard

Domtar Industries, Inc., Sifto Salt Division, P.O. Box 7212, Montreal, Canada, H3C 3M3 has filed a petition to modify the application of 30 CFR 57.21-52 (gassy mines—ventilation) to its Cote Blanche Mine located in St. Mary Parish, Louisiana, in accordance with section 101(c) of the Federal Mine Safety and Health Act of 1977.

A summary of the petitioner's statements follows: 1. The petitioner is mining domal salt. Rooms and pillars are large, and the strata is relatively impermeable to gas.

2. The petitioner states that its mine is less prone to blowouts (gas outbursts) than any other domal type salt mine declared gassy, both in numbers and magnitude of blowouts. Blowout cavities are oriented vertically, and they can be identified and avoided. Blowout avoidance has been demonstrated to be particularly successful at the petitioner's mine.

3. As an alternative to the application of 30 CFR 57.21-52, the petitioner proposes to permit "dead-ends" to be abandoned subject to monitoring. Should any dead-ends result from the devleopment of the mine, all abandoned dead-ends would be barricaded against entry by personnel. They would be examined by qualified persons within two hours before any workers, other than the examiners, enter a dead-end entry. Should a non-barricaded dead-end entry exceed 18 feet in depth, it will be ventilated by auxiliary fans.

4. A number of safeguards are listed as follows: a. A minimum of eight methan monitor sensing devices will be located in the mine. At least one of these will be placed to effectively monitor any area to be blasted.

b. Blasting will be done by a competent person with all miners on the surface.

c. Before reentering the mine, monitors located on the surface will provide miners with verification of blast effectiveness and of methane concentrations detected by underground sensors. In addition, competent persons will monitor exhaust air from the mine. Mine crews and nonpermissible equipment will not enter active workings if the methane concentration is 1.0 percent or more.

d. All mobile equipment, either permissible or nonpermissible, taken past the last open crosscut shall have a working methane monitor installed, with both visible and audible warnings.

e. All drills, undercutters and personnel carriers beyond the last open crosscut shall be maintained in a permissible condition.

f. Nonpermissible equipment will not be permitted in entries where drilling or undercutting is in progress.

5. The petitioner alleges that in conjunction with other requested modifications, the proposed modification will guarantee miners no less than the same measure of protection than that afforded by the standard.

Request for Comments

Persons interested in this petition may furnish written comments on or before September 15, 1980. Comments must be filed with the Office of Standards, Regulations and Variances, Mine Safety and Health Administration, Room 627, 4015 Wilson Boulevard, Arlington, Virginia 22203. Copies of the petition are available for inspection at that address.

Dated August 5, 1980.

Frank A. White,

Director, Office of Standards, Regulations and Variances.

[FR Doc. 80-24630 Filed 8-14-80; 8:45 am]

BILLING CODE 4510-43-M

[Docket No. M-80-85-M]

Domtar Industries, Inc.; Petition for Modification of Application of Mandatory Safety Standard

Domtar Industries, Inc., Sifto Salt Division, P.O. Box 7212, Montreal, Canada, H3C 3M3 has filed a petition to modify the application of 30 CFR 57.21-78 (gassy mines—equipment) to its Cote Blanche Mine located in St. Mary Parish, Louisiana, in accordance with section 101(c) of the Federal Mine Safety and Health Act of 1977.

A summary of the petitioner's statements follows: 1. The petitioner is mining domal salt. Rooms and pillars are large, and the strata is relatively impermeable to gas.

2. The petitioner states that is mine is less prone to blowouts (gas outbursts) than any other domal type salt mine declared gassy, both in numbers and magnitude of blowouts. Blowout cavities are oriented vertically, and they can be identified and avoided. Blowout avoidance has been demonstrated to be particularly successful at the petitioner's mine.

3. As an alternative to the application of 30 CFR 57.21-78, the petitioner proposes to use non-permissible equipment beyond the last open crosscut provided monitoring is integrated with equipment operation and with all methane liberating operations. Drills and undercutters will be maintained in permissible condition.

4. Loading, hauling, scaling and explosive-placing activities will not be carried out where a methane concentration exceeds 1.0 percent.

5. The petitioner claims that application of the standard without the requested changed would cause a diminution of miner safety.

6. A number of safeguards are listed as follows: a. A minimum of eight methane monitor sensing devcies will be located in the mine. At least one of these will be placed to effectively monitor any area to be blasted.

b. Blasting will be done by a competent person with all miners on the surface.

c. Before reentering the mine, monitors located on the surface will provide miners with verification of blast effectiveness and of methane concentrations detected by undergrounds sensors. In addition, competent persons will monitor exhaust air from the mine. Mine crews and nonpermissible equipment will not enter active workings if the methane concentration is 1.0 percent or more.

d. All mobile equipment, either permissible or nonpermissible, taken past the last open crosscut shall have a working methane monitor installed, with both visible and audible warnings.

e. All drills, undercutters and personnel carriers beyond the last open crosscut shall be maintained in permissible condition.

f. Nonpermissible equipment will not be permitted in entries where drilling or undercutting is in progress.

7. The petitioner alleges that in conjuction with other requested modifications, the proposed modification will guarantee miners no less than the same measure of protection than that afforded by the standard.

Request for Comments

Persons interested in this petition may furnish written comments on or before September 15, 1980. Comments must be filed with the Office of Standards, Regulations, and Variances, Mine Safety and Health Administration, Room 627, 4015 Wilson Boulevard, Arlington, Virginia 22203. Copies of the petition are available for inspection at that address.

Dated: August 5, 1980.

Frank A. White,

Director, Office Standards, Regulations and Variances.

[FR Doc. 80-24631 Filed 8-14-80; 8:45 am]

BILLING CODE 4510-43-M

[Docket No. M-80-84-M]

Domtar Industries, Inc.; Petition for Modification of Application of Mandatory Safety Standard

Domtar Industries, Inc., Sifto Salt Division, P.O. Box 7212, Montreal, Canada, H3C 3M3 has filed a petition to modify the application of 30 CFR 57.21-59 (gassy mines—ventilation) to its Cote Blanche Mine located in St. Mary Parish, Louisiana, in accordance with section 101(c) of the Federal Mine Safety and Health Act of 1977.

A summary of the petitioner's statements follows: 1. The petitioner is mining domal salt. Rooms and pillars are large, and the strata is relatively impermeable to gas.

2. The petitioner states that its mine is less prone to blowouts (gas outbursts) than any other domal type salt mine declared gassy, both in numbers and magnitude of blowouts. Blowout cavities are oriented vertically, and they can be identified and avoided. Blowout avoidance has been demonstrated to be particularly successful at the petitioner's mine.

3. As an alternative to the application of 30 CFR 57.21-59, the petitioner proposes that qualified persons conduct a pre-shift examination of the return air before any workers enter the mine, and of the working areas within two hours before any workers other than the examiners leave the fresh air area of the mine to enter the working areas.

4. The petitioner states that the safety of workers would be enhanced by sampling and analysis performed while workers remain in fresh air, but within a time period more proximate to the time when the workers would enter the working areas.

5. A number of safeguards are listed as follows: a. A minimum of eight methane monitor sensing devices will be located in the mine. At least one of these will be placed to effectively monitor any area to be blasted.

b. Blasting will be done by a competent person with all miners on the surface.

c. Before reentering the mine, monitors located on the surface will provide miners with verification of blast effectiveness and of methane concentrations detected by underground sensors. In addition, competent persons will monitor exhaust air from the mine. Mine crews and nonpermissible equipment will not enter active workings if the methane concentration is 1.0 percent or more.

d. All mobile equipment, either permissible or nonpermissible, taken past the last open crosscut shall have a

working methane monitor installed, with both visible and audible warnings.

e. All drills, undercutters and personnel carriers beyond the last open crosscut shall be maintained in a permissible condition.

f. Nonpermissible equipment will not be permitted entries where drilling or undercutting is in progress.

6. The petitioner alleges that in conjunction with other requested modifications, the proposed modification will guarantee miners no less and, in fact, an even greater degree of protection than that afforded by the standard.

Request for Comments

Persons interested in this petition may furnish written comments on or before September 15, 1980. Comments must be filed with the Office of Standards, Regulations and Variances, Mine Safety and Health Administration, Room 627, 4015 Wilson Boulevard, Arlington, Virginia 22203. Copies of the petition are available for inspection at that address.

Dated: August 5, 1980.

Frank A. White,

Director, Office of Standards, Regulations and Variances.

[FR Doc. 80-24632 Filed 8-14-80; 8:45 am]

BILLING CODE 4510-43-M

[Docket No. M-80-74-M]

Domtar Industries, Inc.; Petition for Modification of Application of Mandatory Safety Standard

Domtar Industries, Inc., Sifto Salt Division, P.O. Box 7212, Montreal, Canada, H3C 3M3 has filed a petition to modify the application of 30 CFR 57.21-10 (gassy mines—fire prevention and control) to its Cote Blanche Mine located in St. Mary Parish, Louisiana, in accordance with section 101(c) of the Federal Mine Safety and Health Act of 1977.

A summary of the petitioner's statements follows: 1. The petitioner is mining domal salt. Rooms and pillars are large, and the strata is relatively impermeable to gas.

2. The petitioner states that its mine is less prone to blowouts (gas outbursts) than any other domal type salt mine declared gassy, both in numbers and magnitude of blowouts. Blowout cavities are oriented vertically, and they can be identified and avoided. Blowout avoidance has been demonstrated to be particularly successful at the petitioner's mine.

3. As an alternative to the application of 30 CFR 57.21-10, the petitioner proposes to permit smoking in designated, controlled enclosed areas located outside of any known gassy zones. At the beginning of each shift, miners would leave all cigarettes at the designated smoking areas. An electric nonportable device would be provided in the smoking area for lighting the cigarettes. An automatic methane monitor would be located in each smoking area to warn the miners if the methane concentration in the area reaches 1.0 percent.

4. A number of safeguards are listed as follows: a. A minimum of eight methane monitor sensing devices will be located in the mine. At least one of these will be placed to effectively monitor any area to be blasted.

b. Blasting will be done by a competent person with all miners on the surface.

c. Before reentering the mine, monitors located on the surface will provide miners with verification of blast effectiveness and of methane concentrations detected by underground sensors. In addition, competent persons will monitor exhaust air from the mine. Mine crews and nonpermissible equipment will not enter active workings if the methane concentration is 1.0 percent or more.

d. All mobile equipment, either permissible or nonpermissible, taken past the last open crosscut shall have a working methane monitor installed, with both visible and audible warnings.

e. All drills, undercutters and personnel carriers beyond the last open crosscut shall be maintained in a permissible condition.

f. Nonpermissible equipment will not be permitted in entries where drilling or undercutting is in progress.

5. The petitioner contends that a total ban on smoking in the mine is impossible to enforce even with any reasonable program of irregular personnel searches. The petitioner alleges that controlled smoking zones will greatly diminish the potential for uncontrolled smoking in the mine, and that the controlled smoking zones actually will provide miners with an even greater degree of protection than that afforded by the standard.

Request for Comments

Persons interested in this petition may furnish written comments on or before September 15, 1980. Comments must be filed with the Office of Standards, Regulations and Variances, Mine Safety and Health Administration, Room 627, 4015 Wilson Boulevard, Arlington, Virginia 22203. Copies of the petition are available for inspection at that address.

Dated: August 5, 1980.

Frank A. White,

Director, Office of Standards, Regulations and Variances.

[FR Doc. 80-24633 Filed 8-14-80; 8:45 am]

BILLING CODE 4510-43-M

[Docket No. M-80-75-M]

Domtar Industries, Inc.; Petition for Modification of Application of Mandatory Safety Standard

Domtar Industries, Inc., Sifto Salt Division, P.O. Box 7212, Montreal, Canada, H3C 3M3 has filed a petition to modify the application of 30 CFR 57.21-12 (gassy mines—fire prevention and control) to its Cote Blanche Mine located in St. Mary Parish, Louisiana, in accordance with section 101(c) of the Federal Mine Safety and Health Act of 1977.

A summary of the petitioner's statements follows: 1. The petitioner is mining domal salt. Rooms and pillars are large, and the strata is relatively impermeable to gas.

2. The petitioner states that its mine is less prone to blowouts (gas outbursts) than any other domal type salt mine declared gassy, both in numbers and magnitude of blowouts. Blowout cavities are oriented vertically, and they can be identified and avoided. Blowout avoidance has been demonstrated to be particularly successful at the petitioner's mine.

3. As an alternative to the application of 30 CFR 57.21-12, the petitioner poroposes to monitor for methane gas prior to the creation of an ignition source and at thirty (30) minute intervals during the existence of this ignition source.

4. A number of safeguards are listed as follows: a. A minimum of eight methane monitor sensing devices will be located in the mine. At least one of these will be placed to effectively monitor any area to be blasted.

b. Blasting will be done by a competent person with all miners on the surface.

c. Before reentering the mine, monitors located on the surface will provide miners with verification of blast effectiveness and of methane concentrations detected by underground sensors. In addition, competent persons will monitor exhaust air from the mine. Mine crews and nonpermissible equipment will not enter active workings if the methane concentration is 1.0 percent or more.

d. All mobile equipment, either permissible or nonpermissible, taken past the last open crosscut shall have a

working methane monitor installed, with both visible and audible warnings.

e. All drills, undercutters and personnel carriers beyond the last open crosscut shall be maintained in a permissible condition.

f. Nonpermissible equipment will not be permitted in entries where drilling or undercutting is in progress.

5. The petition alleges that in conjunction with other requested modifications, the proposed modification will guarantee miners no less protection than that afforded by the standard.

Request for Comments.

Persons interested in this petition may furnish written comments on or before September 15, 1980. Comments must be filed with the Office of Standards, Regulations and Variances, Mine Safety and Health Administration, Room 627, 4015 Wilson Boulevard, Arlington, Virginia 22203. Copies of the petition are available for inspection at that address.

Dated: August 5, 1980.

Frank A. White,

Director, Office of Standards, Regulations and Variance.

[FR Doc. 80-24634 Filed 8-14-80; 8:45 am]

BILLING CODE 4510-43-M

[Docket No. M-80-73-M]

Homestake Mining Co.; Petition for Modification of Application of Mandatory Safety Standard

Homestake Mining Company, P.O. Box 875, Lead, South Dakota 57754, has filed a petition to modify the application of 30 CFR 57.11-4 (portable rigid ladders) to its Homestake Mine located in Lawrence County, South Dakota. The petition is filed under section 101(c) of the Federal Mine Safety and Health Act of 1977.

A summary of the petitioner's statements follows: 1. Petitioner requests that the use of standard hook ladders be allowed in all stoping operations at the mine as an alternative to complying with the standard.

2. The horizontal cut-and-fill method is presently used at the mine to produce a major percentage of the ore.

3. Access into the stope is usually made from the level above by means of steel ladders supported from the walls of the raise.

4. These fixed ladders are removed from below as the stope progresses upward, and the distance between the bottom of the fixed ladder and the broken ore is spanned by use of a ten foot steel ladder that is attached to the fixed steel ladder by two steel hooks and a safety chain.

5. As the broken rock is removed by the slusher, the hooks are advanced downward on the rungs of the fixed ladder.

6. The bottom of the hook ladder cannot be anchored to the broken rock as the pile is constantly being removed, but the ladder is firmly anchored at the top.

7. Petitioner states that application of the standard would create a safety hazard and that the proposed alternative method outlined above will provide the same or greater protection to the miners affected than that afforded by the standard.

Request for Comments

Person interested in this petition may furnish written comments on or before September 15, 1980. Comments must be filed with the Office of Standards, Regulations and Variances, Mine Safety and Health Administration, Room 627, 4015 Wilson Boulevard, Arlington, Virginia 22203. Copies of the petition are available for inspection at that address.

Dated: August 6, 1980.

Frank A. White,

Director, Office of Standards, Regulations and Variances.

[FR Doc. 80-24637 Filed 8-14-80; 8:45 am]

BILLING CODE 4510-43-M

[Docket No. M-80-106-C]

Jim Walter Resources, Inc. and Thyssen Mining Construction, Inc.; Petition for Modification of Application of Mandatory Safety Standard

Jim Walter Resources, Inc., in conjunction with Thyssen Mining Construction, Inc., P.O. Box 149, Brookwood, Alabama 35444, has filed a petition to modify the application of 30 CFR 77.1911 (ventilation of slopes and shafts) to the Brookwood Mines Numbers 4, 5, and 7 located in Tuscaloosa County, Alabama. The petition is filed under section 101(c) of the Federal Mine Safety and Health Act of 1977.

The summary of the petitioner's statements follows: 1. Eight shafts will be sunk to depths averaging between 1,700 and 2,300 feet, with a finished diameter of approximately 22 feet using the "V Mole" technique. All shafts will be used for ventilation purposes.

2. The "V Mole" technique is a vartical full face drill cutting at 23 feet diameter with the cuttings falling through an existing 5 foot pilot hole to the underground workings below where they will be disposed of by conveyors or other means.

3. All electrical components and cables will be of a type approved by MSHA.

4. Methane monitors with sensors in strategic positions will be mounted on the machine cutting off the main power supply should the methane content of the air rise above the mandatory limit.

5. Petitioner states that sufficient ventilation will be created by this type of drilling. A five foot diameter pilot hole will be connected from the surface directly to the underground workings. The existing exhaust fan will produce a pressure differential of approximately 5" of water gauge between the top and bottom of the pilot hole. With an unregulated access to the return airway, quantities in excess of 60,000 c.f.m. will travel through the 5 foot pilot shaft.

6. Ventilation would be regulated such that an environment could be achieved in the shaft that would be compatible to the manpower and dilute any methane encountered to an acceptable level. A regulator will be installed on the return side of the shaft bottom to create a minimum quantity of 9.000 c.f.m. of fresh air in the shaft.

7. The air quantity will be measured daily and recorded in a book approved by the Secretary.

8. Petitioner states that a mechanical ventilation system will not be necessary because the negative pressure naturally produced by the mine fan at the bottom of the pilot hole will provide more than adequate quantities of air.

9. Petitioner states that the alternative method outlined above will at all times provide the same or greater protection to the miners affected as that afforded by the standard.

Request for Comments

Persons interested in this petition may furnish written comments on or before September 15, 1980. Comments must be filed with the Office of Standards, Regulations and Variances, Mine Safety and Health Administration, Room 627, 4015 Wilson Boulevard, Arlington, Virginia 22203. Copies of the petition are available for inspection at that address.

Dated: August 6, 1980.

Frank A. White,

Director, Office of Standards, Regulations and Variances.

[FR Doc. 80-24635 Filed 8-14-80; 8:45 am]

BILLING CODE 4510-43-M

Proposed Construction and Operation of Expanded Approval and Certification Center—Dallas Pike Area, Ohio County, W. Va.; Finding of no significant environmental impact and availability of environmental assessment

AGENCY: Mine Safety and Health Administration, Department of Labor, (MSHA).

ACTION: Notice—Finding of No Significant Environmental Impact and Availability of Environmental Assessment.

SUMMARY: The purpose of this notice is to announce a determination by MSHA under the National Environmental Policy Act (NEPA), and Council on Environmental Quality (CEQ) and Department regulations implementing NEPA, that the planned construction and operation of an expanded Approval and Certification Center in Dallas Pike Area, Ohio County, West Virginia will have no significant impact on the environment; and to announce the availability of an environmental assessment concerning the project.

FOR FURTHER INFORMATION CONTACT: Roy L. Bernard, Director of Technical Support, MSHA, Room 917, Ballston Tower No. 3, 4015 Wilson Boulevard, Arlington, VA. 22203, telephone (703) 235-1580. The environmental assessment is available for public inspection and copies may be obtained at this address.

SUPPLEMENTARY INFORMATION: In accordance with NEPA, and CEQ and Department regulations, MSHA has conducted an environmental assessment as part of the planning process for the construction and operation of an expanded Approval and Certification Center (A&CC) in the Dallas Pike Area, Liberty-Triadelphia District, Ohio County, West Virginia. Commencement of the project is authorized by the bill providing for appropriations for the Departments of Labor and Health, Education and Welfare and related agencies for Fiscal Year 1980 (H.R. 4389) as adopted by Pub. L. 96-123. The project constitutes an expansion of MSHA's existing A&CC, which has been in operation since 1977 performing testing and evaluation of mining equipment, devices and materials.

In assessing the potential environmental impact of this project, MSHA has considered the following factors, as set forth in the Department's NEPA regulations, 29 CFR 11.11[c] (45 FR 51187, August 1, 1980): present use and characteristics of the site; area population density and makeup; the adequacy of and impact on community facilities and services, including water, sanitary sewage and waste disposal, energy resources and utilities, traffic and roadway systems, public transportation, health services, schools, recreational facilities, fire and police protection, and business and community development policy; potential impact on air and water quality, noise levels, land use patterns, and soil quality (drainage and soil erosion); and potential impact on natural systems and resources, including rivers and streams, forests, wetlands, floodplains, wilderness areas, and places or species designated for preservation. After carefully considering these factors as they apply to the A&CC project, it is determined that the project will have no significant impact on the environment and that an environmental impact statement is not required. The environmental assessment is available for public inspection and copies may be obtained at the Office of the Director of Technical Support, MSHA, at the above address.

Dated: August 8, 1980.

Robert B. Lagather,

Assistant Secretary for Mine Safety and Health.

[FR Doc. 80-24781 Filed 8-14-80; 8:45 am]

BILLING CODE 4510-43-M

Office of Federal Contract Compliance Programs

PFG & Sons Builders and Contractors, Inc., Chicago, Ill.; Debarment

On June 3, 1980, for violation of Executive Order 11246, as amended, the Secretary of Labor ordered that:

PFG & Sons Builders and Contractors, Inc.'s present Government contracts and subcontracts and Federally-assisted construction contracts and subcontracts be cancelled, terminated or suspended, and that PFG be declared ineligible for further contracts and subcontracts and for extensions or modifications of existing contracts and subcontracts until it satisfies the Director of OFCCP that it is in compliance with Executive Order 11246 and the Secretary of Labor's implementing regulations issued pursuant thereto.

The sanctions are applicable to PFG, its officers, subsidiaries and divisions, all purchasers, successors, assignees, and transferees.

A copy of the Secretary of Labor's Decision and Final Administrative Order, a June 3, 1980 Errata to it clarifying the Decision's scope, and the Recommended Decision of the Administrative Law Judge, are attached.

Dated: August 8, 1980.

Ray Marshall,

Secretary of Labor.

In the matter of U.S. Department of Housing and Urban Development, Complainant, and PFG & Son Builders and Contractors, Inc., Respondent, Docket No. EO-78-2-CC.

Decision and Final Administrative Order of the Secretary of Labor

Preliminary Statement

This matter arises under Executive Order 11246, as amended (hereinafter referred to as the Order), which prohibits employment discrimination based on race, color, religion, sex, or national origin by Government contractors and subcontractors and Federally-assisted construction contractors and subcontractors. The Order also imposes affirmative action obligation on such contractors to ensure that applicants are employed, and that employees are treated during employment, without regard to their race, color, religion sex or national origin. The Secretary of labor and the Director of Federal Contract Compliance Programs (hereinafter referred to as OFCCP) are responsible for issuance and enforcement of regulations under the Order, found at 41 CFR Chapter 60.

This is an action brought by the Department of Housing and Urban Development and the Department of Labor against PFG & Son Builders and Contractors, Inc., (hereinafter referred to as Respondent) for violation of the Order and the rules and regulations issued pursuant thereto. Complainants prayed that Respondent be preliminarily and permanently enjoined from failing and refusing to comply with the requirements of the Order and the rules and regulations issued pursuant thereto; and for a recommended decision providing that all of Respondent's Federal contracts and subcontracts and Federally-assisted construction contracts and subcontracts shall be cancelled, and that Respondent and its successors shall be ineligible for the award of any contracts or subcontracts awarded in whole or part with Federal funds, and shall be declared ineligible for extensions or other modifications of any existing Government contracts and subcontracts, or Federally-assisted contracts and subcontracts until Respondent has satisfied the Director of OFCCP that Respondent is in compliance with the provisions of Executive Order 11246 and the rules, regulations, and orders issued thereunder.

On February 17, 1975 Respondent entered into a contract with the

sponsors of the Near West Side Construction project in Chicago, Illinois, for the rehabilitation of a multifamily housing project, a Federal Housing Administration Project. Resondent agreed, by signing the contract, to be bound by the terms and conditions of the Order and the provisions of the Chicago Plan. On February 28, 1978, Complainants issued and served on Respondent an Administrative Complaint pursuant to the Order, and the rules and regulations issued pursuant thereto. Service was accomplished by the U.S. Postal Service on March 8, 1978 by certified mail. No answer was filed by Respondent.

On May 18, 1978, the Administrative Law Judge issued an Order to Show Cause. By the Order, Respondent was directed to show cause why a recommended decision should not issue. Respondent did not respond to the show cause order.

On July 3, 1978, the Administrative Law Judge filed a Recommended Decision and Order in the case finding the Respondent in default for its failure to answer the Administrative Complaint and for failure to respond to the Order to Show Cause. The Recommended Order would cancel, terminate, and suspend all of Respondent's Federal contracts and subcontracts, or contracts and subcontracts where Federal financial assistance is involved. Further, if adopted, the Order would render Respondent ineligible for any contracts or subcontracts, or extensions or modifications of existing contracts or subcontracts funded in whole or in part by federal funds from any agency of the United States, until Respondent has satisifed the Director of OFCCP that it is in compliance with the Order, and the rules, regulations, and orders issued thereunder or under any superseding Executive Order.

In the Recommended Decision and Order the Administrative Law Judge did not grant Complainant's prayer for an injunction against Respondent's failure and refusal to comply with the Order. He reasoned that Section 209(a)(2) of the Order provides that injunctive actions shall be instituted by the Department of Justice in a United States district court. Therefore, he concluded, such relief is not authorized or appropriate in an administrative proceeding.

On October 5, 1978 President Carter issued Executive Order 12086 which consolidated the Executive Order functions of eleven (11) Federal agencies into the Department of Labor effective October 8, 1978. the Department of Housing and Urban Development was one of these agencies. Prior to the consolidation the Regulations provided, in pertinent part, that when a hearing was conducted by an agency, the hearing officer was to make a recommendation to the head of the agency as to what sanctions should be imposed on a contractor or subcontractor. The head of the agency was to make a final decision which had to be approved by the Director of OFCCP.

The Regulations promulgated after consolidation provide that the Administrative Law Judge is to recommend findings, conclusions, and a decision to the Secretary of labor who is to make the Final Administrative Order (41 CFR Parts 60-30.27 and 60-30-30). The regulations, however, did not provide for those instances when a proceeding had been instituted by a compliance agency before consolidation, but which was not concluded until after consolidation had been effectuated.

In the instant case, the Deputy Assistant Secretary for Fair Housing and Equal Opportunity concurred in the Recommended Decision and Order of the Administrative Law Judge on August 1, 1978—prior to consolidation. However, the Recommended Decision and Order, and a certified copy of the record was not transmitted to the Director of OFCCP for his approval until March 2, 1979.

At the time of this transmittal, the regulations in effect provided, and they continue to provide, no role for the Director of OFCCP in the issuance of a final Administrative Order. Rather, this function, as noted above, belongs to the Secretary of Labor. It is for that reason that I, as Secretary of Labor, am issuing this Administrative Order.

Ruling on Decision

I have reviewed the entire record in this matter, and I find no prejudicial error in the Recommended Decision. I adopt the Recommended Decision of the Administrative Law Judge, including the recommended finds of fact and conclusions of law.

Ruling on Complainant's Exception

Complainant prayed, *inter alia*, for an order enjoining Respondent from failing and refusing to comply with the Order and the implementing regulations, including the Chicago Plan, so long as the Respondent is subject to the Order and such regulations. The Administrative Law Judge did not grant Complainant's prayer for injuctive relief against Respondent on the grounds that Section 209(a)(2) requires that injunctive actions be instituted by the Department of Justice in a United States district court. Therefore, he concluded, such relief is unauthorized in an administrative proceeding. Complainant filed an exception to this portion of the Administrative Law Judge's Recommended Decision.

If the Administrative Law Judge's Recommended Order is adopted, Respondent would be declared ineligible for all future Federally-involved contracts and subcontracts and all its current Federally-involved contracts and subcontracts would be cancelled, terminated and suspended until Respondent has satisfied the Director of OFCCP that it is in compliance with the Order and the implementing regulations.

Complainant has failed to show that the Recommended Order is not adequate. It is difficult to understand why an Order enjoining the Respondent to comply with the order and implementing regulations while it is subject to the Order and such regulations is necessary if all Respondent's current contracts have been cancelled, terminated and suspended and it has been declared ineligible for future contracts.

Accordingly, Complainant's Exception is hereby denied.

Conclusion and Administrative Order

I hereby order, in accordance with sections 209(a) (5) and (6) of the Order and 41 CFR 60-1.26 and 60-30.30, that:

Respondent's present Government contracts and subcontracts and Federally-assisted construction contracts and subcontracts be cancelled, terminated or suspended and that Respondent be declared ineligible from further contracts and subcontracts, and from extensions or modifications of any existing contracts and subcontracts, until such time that it can satisfy the Director of OFCCP that it is in compliance with Executive Order 11246 and the Secretary of Labor's regulations issued pursuant thereto.

The sanctions invoked herein shall be applicable to Respondent, its officers, subsidiaries and divisions and all purchasers, successors, assignees and transferees.

Signed at Washington, D.C., this 3rd day of June, 1980.

Ray Marshall,

Secretary of Labor.

In the matter of U.S. Department of Housing and Urban Development, Complainant, and PFG & Sons Builders and Contractors, Inc., Respondent, Docket No. EO-78-2-CC.

Errata

The Decision and Final Administrative Order of the Secretary of Labor in this case is corrected as follows:

At page 6 *"Ruling on Decision"*, second sentence, to read: "I adopt the recommended

findings of fact and conclusions of law of the Administrative Law Judge."

Signed at Washington, D.C., this 3d day of June, 1980.

Ray Marshall,

Secretary of Labor.

July 3, 1978.

United States of America Before the Department of Housing and Urban Development and the Department of Labor, Office of Federal Contract Compliance

In the matter of: PFG & Son Builders and Contractors, Inc., Respondent, *Christopher H. Hartenau* and *Betty Kaufman*, Attorneys for the Department of Housing and Urban Development, *Carin Ann Clauss*, Solicitor of Labor, *James D. Henry*, Associate Solicitor, *Louis G. Ferrand, Jr.*, Counsel for Civil Rights, and *Sheila Berman*, Attorney, for the Department of Labor, *Mr. Peter Gerson*, President of Respondent for Respondent, Docket No. EO-78-2-CC.

Recommended Decision

On February 28, 1978, the Department of Housing and Urban Development, herein the Department, and the Department of Labor, herein Labor; issued and served on Respondent an Administrative Complaint pursuant to Executive Order 11246, as amended, 3 C.F.R. 339, *et seq.*, herein E.O. 11246, and the Rules and Regulations of Labor, herein the Rules, 41 C.F.R. Chapter 60. Service was accomplished by the U.S. Postal Service on March 8, 1978, by certified mail. No answer was filed by Respondent.

On May 18, 1978, the undersigned issued an Order to Show Cause. By the Order, Respondent was directed to show cause why a recommended decision should not issue. Service was accomplished on Respondent by the U.S. Postal Service on January 24, 1978. Respondent did not respond to the show cause order.

By the Rules 41 C.F.R. 60-30.7(a), Respondent was required to answer the Administrative Complaint by March 29, 1978, twenty days from receipt of the Complaint. Respondent failed to comply. Further, Respondent failed to respond to the Order to Show Cause. There has been no claim that there are reasons which should excuse the failures to answer or respond. Under the circumstances, Respondent is determined to be in default; it is concluded that issuance of a recommended decision is appropriate under 41 CFR 60-30.7 (b) and (c), in that, Respondent is deemed to have admitted the allegations of the Complaint, and to have waived its right to a hearing.

Accordingly, on the entire record, I make the following:

Findings of Fact

1. Respondent PFG & Son Builders and Contractors, Inc. is a construction company which has, at all times pertinent hereto, maintained and continues to maintain a place of business and employment at 850 West 119th Street, Chicago, Illinois 60643.

2. Respondent is engaged in the business of the construction of buildings and other improvements to real property.

3. At all times pertinent hereto, Respondent was a contractor and subcontractor within the definition at 41 CFR 60-1.3, in that, it entered into a contract agreement on February 17, 1975 with the sponsors of the Near West Side Construction project in Chicago, Illinois for the rehabilitation of a multifamily housing project, a Federal Housing Administration Project, in which it agreed through signing, to be bound by the terms and conditions of Executive Order 11246, as amended, and the provisions of the Chicago Plan. The contract exceeded $650,000 in value.

4. The construction project was referenced in the contract, *supra*, as Federal Housing Administration (FHA) Project No. 071-35244. FHA Project 071-35244 is a project undertaken pursuant to Section 221(d)(4) of the National Housing Act, 12 U.S.C. 1701 *et seq.*, a program of mortgage insurance. Application for mortgage insurance on the project was initially made pursuant to Section 220 of the National Housing Act at which time the Project Number was 071-32072.

5. As a non-exempt contractor and subcontractor, Respondent was, during its work on the rehabilitation project, subject to Section 202(1) of Executive Order 11246 which provides in pertinent part that:

"(t)he contractor will not discriminate against any employee or applicant for employment because of race, color, religion, sex, or national origin. The contractor will take affirmative action to ensure that applicants are employed, and that employees are treated during employment, without regard to their race, color, religion, sex, or national origin."

6. As a non-exempt contractor and subcontractor, Respondent was, during its work on the Project, also subject to Sections 202(2)-(7) of Executive Order 11246.

7. Section 202(4) of Executive Order 11246 provides that:

"The contractor will comply with all provisions of Executive Order No. 11246 of September 24, 1965, and of the rules, regulations, and relevant orders of the Secretary of Labor."

8. Section 202(5) provides that:

"The contractor will furnish all information and reports required by Executive Order No. 11246 of September 24, 1965 and by the rules, regulations, and orders of the Secretary of Labor, or pursuant thereto, and will permit access to his books, records, and accounts by the contracting agency and the Secretary of Labor for purposes of investigation to ascertain compliance with such rules, regulations, and orders."

9. The Sections of Executive Order 11246 which are referenced in Paragraph 7-10, *supra*, were included in Respondent's contract, *supra*, under the heading "FHA Form No. 2554," "Supplementary Conditions of the Contract for Construction," Article 2.

10. Section 301 of Executive Order 11246 provides that all non-exempt Federally assisted construction contracts and subcontracts must include the provisions of Section 202 of the Executive Order if they are financed or insured in whole or in part with Federal funds, "together with such additional provisions as the Secretary (of Labor) deems appropriate to establish and protect the interest of the United States in the enforcement of those obligations."

11. In the Chicago, Illinois area, any contract or subcontract exceeding $500,000 for a federally-assisted construction project is subject to the requirements of the Chicago Plan.

12. The Near West Side Construction Project, which exceeded $650,000 in value, was subject to the Chicago Plan.

13. At all times pertinent hereto, Respondent has been and continues to be a Federally assisted construction contractor within the meaning of Executive Order 11246, and is now, and at all material times has been, subject to the contractual obligations imposed on Federally assisted construction contractors and subcontractors by Executive Order 11246 and the implementing regulations issued thereunder including the requirements of the Chicago Plan.

14. On February 20, 1975, representatives of Respondent attended a preconstruction conference at which a representative of the Department reminded them of Respondent's obligation to submit Monthly Manpower Utilization Reports to the Department.

15. Respondent failed to submit such Monthly Manpower Utilization Reports after September 1975, in violation of Section 202 of Executive Order 11246; the Chicago Plan, and regulations at 41 CFR 60-1.7 and 24 CFR 130.50.

16. Despite a specific March 1, 1976 letter request from the Office of Federal Contract Compliance Programs, Respondent failed to produce *inter alia* the following information at a compliance review conducted by representatives of the Department on April 6, 1976:

(a) Payroll records for the period of July 1, 1975 to February 29, 1976;

(b) A listing of Respondent's non-federally involved construction projects from July, 1975 to February, 1976;

(c) Monthly Manpower Utilization Reports for October 1975 through February 1976.

17. Respondent's failure to provide the information listed in Paragraph 16, *supra*, violated its contractual commitments pursuant to Section 202 of the Executive Order, the Chicago Plan and regulations at 41 CFR 60-1.7 and 24 CFR 130.50.

18. Pursuant to 41 CFR 60-1.20(b), upon finding deficiencies in Respondent's affirmative action compliance program, the Deparetment made efforts to secure through conciliation and persuasion, voluntary compliance by Respondent with Executive Order 11246 and the rules, regulations and orders promulgated thereunder. These efforts were unsuccessful.

Summary

E.O. 11246, which issued September 24, 1965, established as public policy the requirement of equal employment opportunity on Federal and Federally assisted contracts. As stated in Executive Order 11375 (1975) which amended E.O. 11246:

"It is the policy of the United States Government to provide equal opportunity in Federal employment and in employment by Federal contractors on the basis of merit and without discrimination because of race, color, religion, sex, or national origin."

E.O. 11246 has three main subdivisions, Part I, nondiscrimination in Government

employment; Part II, nondiscrimination in employment by Government contractors; and Part III, nondiscrimination provisions in Federally assisted construction contracts. This action is initiated under Part II. Effectuation of E.O. 11246 in such situations involving Federal construction contracts has been implemented by a series of plans for equal employment opportunity which were promulgated pursuant to E.O. 11246. These plans established procedures and requirements of compliance with E.O. 11246. The Chicago Plan involved in this case is such a plan.

Each Federal agency was assigned responsibility for application and enforcement of E.O. 11246 under procedures and supervision of Labor. This responsibility included investigation, preliminary determination, voluntary conciliation and compliance, and administrative adjudication of such cases. All procedures under E.O. 11246 were, of course, to be pursuant to Rules promulgated by Labor. The procedures contemplated by the Rules and the consolidation were controlling, and were complied with in this case.

The essential elements and issues of a case under Part II of E.O. 11246 are: (1) Whether Respondent is a contractor within the meaning of E.O. 11246; (2) whether Respondent had discriminated in employment or has violated the equal opportunity clause of the contract; (3) whether there has been a good faith effort by the Department to resolve the violation by informal and reasonable conciliation or compliance under 41 CFR 60.1.24(c)(2); and (4) whether the sanctions authorized by Section 209 of E.O. 11246 should be imposed.

Respondent, as contractor of the sponsors on the Near West Side Construction project, was to provide materials and services on construction work at the project. As such, Respondent was a contractor within the meaning of 41 CFR 60.1.3(h). Where the project was funded by Department insured funds, Respondent was required to comply with E.O. 11246 and the Chicago Plan. When Respondent failed to provide the Department with information required to be furnished under E.O. 11246, the Chicago Plan, and Respondent's contract, the elements of a violation of E.O. 11246, the Chicago Plan and the equal opportunity clause of Respondent's contract were established.

The Department engaged in "efforts to secure through conciliation and persuasion, voluntary compliance by [respondent] with Executive Order 11246 and the rules, regulations and orders promulgated thereunder. These efforts were unsuccessful." In the absence of any claim or evidence to the contrary, this is deemed sufficient to meet the requirements of § 60.1.24(c)(2), both as to sufficiency of effort and reasonableness and applicability of requirements, sought by conciliation.

In its proposed order, the Department requests an injunction against Respondent's failure and refusal to comply with the requirements of E.O. 11246. Although E.O. 11246 does provide for injunctive at of Section 209(a)(2), the Executive Order requires that injunctive actions be instituted by the Department of Justice in a United States District Court. It is concluded that such relief is not authorized or appropriate in an administrative proceeding. Accordingly, the request is denied.

The administrative proceeding is limited to the imposition of sanctions authorized in Section 209(a) (5) and (6) of E.O. 11246. These include cancellation of contracts under (5) and exclusion from further contracts under (6). Neither subsection normally contemplated permanent termination or exclusion where Respondent can establish that compliance has been achieved and will be maintained. Thus, in appropriate cases, it is relevant to consider prospectively the requirements of compliance based on the violations established by litigation. since the present case is based on default, the requirements of compliance are concluded to be those included in the Conciliation Agreement provided in solicitation of the voluntary compliance previously referred to. These are stated generally as compliance with E.O. 11246, the Chicago Plan, and Respondent's contracts implementing the Chicago Plan, including complying with the reporting requirements. Since any compliance will be based on adjudicated findings of violations and an order, compliance should contemplate notice to employees and applicants for employment of these findings.

Conclusions of Law

1. This Department has jurisdiction of this action under Sections 206 and 209 of 11246, 41 CFR 60-1.26 and 41 CFR Part 60-30.

2. E.O. 11246 and the Chicago Plan bid conditions applied to Respondent's work on the Near West Side construction project and to its other work in the Chicago Plan area.

3. Respondent violated E.O. 11246 and the provisions of its contract implementing the Chicago Plan bid conditions by failing to make adequate good faith efforts to meet its goal for minority employment on the Near West Side construction project.

4. Respondent violated the provisions of E.O. 11246 and its contract implementing the Executive Order and the Detroit Plan by failing to provide the Department with validly requested information.

5. The Department and HEW exerted adequate efforts toward achieving Respondent's voluntary compliance with E.O. 11246 and the Detroit Plan Bid Conditions.

Recommended Order

It is ordered that all Federal contracts and subcontracts, or contracts and subcontracts where Federal financial assistance is involved, with Respondent PFG & Son Builders and Contractors, Inc. are cancelled, terminated and suspended. It is further ordered the Respondent PFG & Son Builders and Contractors, Inc. shall be ineligible for any contracts or subcontracts, or extensions or modifications of existing contracts or subcontracts funded in whole or in part by Federal funds from any agency of the United States, until Respondent PFG & Son Builders and Contractors, Inc. has satisfied the Director of the Office of Federal Contract Compliance that is is in compliance with the provisions and requirements of Executive Order 11246, and the rules, regulations, and orders, issued thereunder or under any superseding Executive Order.

Issued at Washington, D.C., on July 3, 1978.

James W. Mast,

Chief Administrative Law Judge, Department of Housing and Urban Development, Rm. 7150, Washington, D.C. 20410.

United States of America before the Department of Housing and Urban Development and the Department of Labor, Office of Federal Contract Compliance

In the matter of: PFG & Son Builders and Contractors, Inc., Respondent, Docket No. EO-78-2-CC.

Certificate

I certify that on July 3, 1978, I filed the record of the hearing including the Recommended Decision, Findings of Fact, Conclusions of Law, Recommended Order, records and exhibits in the above case with the Secretary of the Department of Housing and Urban Development, Patricia Roberts Harris, Washington, D.C.

Issued at Washington, D.C. on July 3, 1978.

James W. Mast,

Chief Administrative Law Judge, Department of Housing and Urban Development, Rm. 7150, 451 Seventh Street, S.W., Washington, D.C. 20410.

United States of America before the Department of Housing and Urban Development and the Department of Labor, Office of Federal Contract Compliance

In the matter of: PFG & Son Builders and Contractors, Inc., Respondent, Docket No. EO-78-2-CC.

Errata

The Recommended Decision in this case is corrected as follows:

1. At page 8, numbered paragraph 4 to read, "Respondent violated the provisions of E.O. 11246 and its contract implementing the Executive Order and the Chicago Plan by failing to provide the Department with validly requested information."

2. At page 8, numbered paragraph 5 to read, "The Department exerted adequate efforts toward achieving Respondent's voluntary compliance with E.O. 11246 and the Chicago Plan bid conditions."

Issued at Washington, D.C. on January 24, 1979.

James W. Mast,

Chief Administrative Law Judge, Department of Housing and Urban Development, Rm. 7150, 451 Seventh Street, S.W., Washington, D.C. 20410.

[FR Doc. 80-24784 Filed 8-14-80; 8:45 am]

BILLING CODE 4510-27-M

S.T.C. Construction Co., Cherry Hill, N.J.; Debarment

On June 24, 1980, for violation of Executive Order 11246, as amended, the Secretary of Labor ordered that:

S.T.C. Construction Company's present Government contracts and subcontracts and Federally-assisted construction contracts and subcontracts be cancelled, terminated or suspended,

and that S.T.C. be declared ineligible for further contracts and subcontracts and for extensions or modifications of existing contracts and subcontracts until it satisfies the Director of OFCCP that it is in compliance with Executive Order 11246 and the Secretary of Labor's implementing regulations issued pursuant thereto.

The sanctions are applicable to S.T.C., its officers, subsidiaries and divisions, all purchasers, successors, assignees, and transferees.

A copy of the Secretary of Labor's Decision and Final Administrative Order and the Recommended Decision of the Administrative Law Judge are attached.

Dated: August 8, 1980.

Ray Marshall,

Secretary of Labor.

In the matter of U.S. Department of Housing and Urban Development, Complainant, and S.T.C. Construction Company. Respondent. Docket No. 77-OFCCP-5.

Decision and Final Administrative Order of The Secretary of Labor

Preliminary Statement

This matter arises under Executive Order 11246, as amended (hereinafter referred to as the Order), which prohibits employment discrimination based on race, color, religion, sex, or national orgin by Government contractors and subcontractors and Federally-assisted construction contractors and subcontractors. The Order also imposes affirmative action obligations on such contractors to ensure that applicants are employed, and that employees are treated during employment, without regard to their race, color, religion, sex, or national origin. The Secretary of Labor and the Director of the Office of Federal Contract Compliance Programs (hereinafter referred to as OFCCP) are responsible for issuance and enforcement of regulations under the Order, found at 41 CFR Chapter 60.

On June 28, 1977 the Department of Housing and Urban Development (HUD) initiated an enforcement proceeding under the Order against S.T.C. Construction Company (hereinafter referred to as Respondent) alleging violation of the "Camden Plan" and Executive Order 11246 through, *inter alia*, its failure to furnish requisite records in connection with a HUD investigation to ascertain compliance with its contract with the Housing Authority of the Borough of Collingswood, New Jersey (Low Income Housing Project NJ 79-1).

On May 22, 1979 Administrative Law Judge (ALJ) Rhea M. Burrow, after a hearing, issued a Recommended Decision and Order in this case. The conclusion of the Administrative Law Judge was that Respondent was subject to Executive Order 11246, as amended, and the Camden Plan Bid Conditions and that it violated its contractual obligations and the Order by failing and refusing to provide timely access to pertinent records, by failing to submit monthly manpower Utilization Reports and by failing to submit required certifications from its subcontractors. The Administrative Law Judge ordered that Respondent cease and desist from refusing to furnish all required information relating to its Federal and Federally-assisted contracts and subcontracts now and in the future. Further, his Recommended Order concluded that sanctions for past transgressions or violations not now be imposed, so long as in any new contract or contracts upon which the company may bid that it satisfy the Director of the Government Agency and the Director of OFCCP that it is and has been in compliance.

On October 5, 1978, President Carter issued Executive Order 12086 which consolidated the Executive Order functions of eleven (11) Federal agencies into the Department of Labor as of October 8, 1978. The Department of Housing and Urban Development was one of these agencies. Prior to the consolidation, the regulations provided, in pertinent part, that when a hearing was conducted by an agency, the hearing officer was to make a recommendation to the head of the agency as to what sanctions should be imposed on a contractor or subcontractor. The head of the agency was to make a final decision which had to be approved by the Director of OFCCP.

The Regulations promulgated after consolidation provide that the Administrative Law Judge is to recommend, findings, conclusions, and a decision to the Secretary of Labor, who is to make the Final Administrative Order (41 CFR Parts 60-30.27 and 60-30.30). The regulations, however, did not provide for those instances when a proceeding had been instituted by a compliance agency before consolidation, but which was not concluded until after consolidation had been effectuated.

In the instant case, the Administrative Law Judge issued his Recommended Decision and Order on May 22, 1978. However, no action was taken by the Department of Housing and Urban Development before October 8, 1978. Thereafter, on October 23, 1978 the Acting Assistant Secretary for Fair Housing and Equal Opportunity transmitted the record in this case to the Director of OFCCP.

At the time of this transmittal, the regulations in effect provided, and continue to provide, no role for the Director of OFCCP in the issuance of a Final Administrative Order. Rather, this function, as noted above, belongs to the Secretary of Labor. It is for this reason that I, as Secretary of Labor, am issuing this Decision and Final Administrative Order.

Findings

I have reviewed the entire record. Based on that review, I accept and adopt the Findings of the Administrative Law Judge, except for Findings 10 and 12.

Rulings On Exceptions

Complainant's Exception 1

Complainant excepts to the admission of testimony by the ALJ at the May 9, 1978 hearing in contravention of the ALJ's earlier ruling that no testimony would be allowed, and in spite of the fact that Respondent failed in its response to the Motion for Summary Judgment to specify the matters it proposed to raise and the hearing.

The exception is denied.

The AJL stated that he would hear testimony at the May 9, 1978 hearing in order for him to decide what sanctions he should recommend. (Transcript, at page 57.) He would not hear testimony as to whether a violation had occurred or whether Respondent was at that time in compliance. (Transcript, at page 55.) There is nothing in the Order or the Regulations which render this action by the ALJ erroneous. Rather, the Regulations are very flexible and provide the ALJ with a great deal of latitude in accepting testimony. For example, the first sentence of 41 CFR 60-30.18 reads, "Formal rules of evidence shall not apply, but rules or principles designed to assure production of the most probative evidence shall be applied." The ALJ had the authority to hear the testimony, despite his previous ruling.

Complainant's Exception 2

Complainant excepts to the admission of testimony at the May 8, 1978 hearing which was irrelevant and outside the scope of the Complaint and Motion for Summary Judgment.

The exception is denied.

As noted in the above discussion of Complainant's Exception 1, the ALJ is given great latitude in the admission of evidence, and formal rules of evidence

are not applicable. In addition, the last sentence of 41 CFR 60-30.18 reads, "The Administrative Law Judge *may* exclude evidence which is immaterial, irrelevant, and unduly repetitious." (Emphasis added) Since the ALJ *may* exclude such evidence, it is implied that the ALJ also may allow such evidence to be introduced.

Complainant's Exception 3

Complainant excepts to the rejection by the ALJ of evidence on the subject of Respondent's cooperation and compliance.

The exception is denied.

In its exception Complainant states that in Findings 10 and 12 the ALJ concluded that Respondent was "currently in compliance with all requirements and there was no discrimination involved in the contract at issue." I do not read the ALJ's decision to say that. Rather in item 10(b) he states, "There has been no discriminatory violations alleged or demonstrated as to any of his Government contracts." In item 10(c) he states, "Discrimination is not alleged or involved as to the current contract in issue in this proceeding." I do not think that these two statements constitute a conclusion that there was no discrimination—only that it was not in issue.

The fact that it was not an issue was freely admitted by the Government. Transcript, at pages 43, 55.

Further in the exception, Complainant discusses two memoranda and accompanying analysis concerning the hiring of minorities by Respondent. However, I see no indication that the Government had ever attempted to formally introduce them into evidence. Finally, in this exception Complainant refers to the ALJ's refusal of testimony concerning the Government's difficulty in obtaining evidence from Respondent. The record indicates that the Government alluded to difficulty the Government had in obtaining information during settlement negotiations. However, it was stated that it was not relevant to whether or not Respondent had complied with the Executive Order and whether or not it ought to be debarred. Transcript, at page 74. It appears contradictory for the Government to state during the hearing that evidence is irrelevant and then except to the fact that the ALJ did not admit it.

Complainant's Exception 4

Complainant excepts to the failure of the ALJ to give appropriate weight to undisputed evidence in the record which contradicts Respondent's assertions of good faith, cooperation, and compliance.

The exception is granted.

The ALJ stated "* * * there is good reason to believe a bona fied (sic) effort will be made by him (Mr. Whalen, S.T.C. President) to assure personal compliance as well as compliance by STC with the Order and regulations now and in the future." (Recommended Decision at 7)

Complainant, in its exception, outlines various facts which cast doubt on the ALJ's conclusion.

I do not believe that the facts, as presented in the record to me, warrant the prediction that Respondent will cooperate in the future and comply with the Order and regulations. Respondent ignored its reporting obligations under the Executive Order and regulations promulgated pursuant thereto. Neither Mr. Whalen, the President, nor Mr. Parkinson, who represented himself as the company's "EEO Representative" was present at a compliance review at the construction site—a meeting which had been arranged in writing and confirmed by telephone. A show cause notice addressed to Mr. Whalen was also ignored.

I therefore conclude that the ALJ erred when he opined that there was a good reason to believe S.T.C. would comply in the future.

Complainant's Exception 5

Complainant excepts to the failure of the ALJ to recommend any sanctions against Respondent, after violations of the Order and the implementing regulations were admitted as charged.

The exception is granted.

The ALJ concluded in his Findings 10 and 12 that there were circumstances that lend credence to the Respondent's argument that the imposition of the sanctions would be a harsh and inequitable penalty. In his Recommended Order, the Judge concludes that no sanction for past transgressions or violations should be imposed.

I find that the Administrative Law Judge erred in his finding that the imposition of sanctions would be a harsh and inequitable penalty and that he erred in his Recommended Order that no sanctions be imposed.

Achievement of the purposes of Executive Order 11246 depends on the Government's ability to monitor compliance with the Order and its implementing regulations. The Respondent contractor agreed as part of its contract that it would provide required reports and would provide access to its books and records for purposes of investigation to ascertain compliance.

The ALJ found, and indeed the Respondent admitted, that it did not provide required reports, failed to have requested documents available for the compliance review, failed to respond to the Show Cause Notice and the followup letter of intent to recommend sanctions issued by HUD.

It is appropriate to impose sanctions where a clear violation of the Executive Order has occurred and impairment of the Government's monitoring and enforcement of the Order has resulted.

Complainant's Exception 6

Complainant excepts to the limitation in the Recommended Order of the reporting requirements to Federal and Federally-assisted contracts and subcontracts.

The exception is granted.

Pursuant to the "Camden Plan" and the reporting requirements agreed to by contractors, information on the composition of each contractor and subcontractor workforce must be submitted by the Respondent on non-Federal construction work within the Camden Plan area as well as its Federal and Federally-assisted construction work.

Conclusion and Administrative Order

I hereby order, in accordance with sections 209(a) (5) and (6) of the Order and 41 CFR 60-1.26 and 60-30.30, that:

Respondent's present Government contracts and subcontracts and Federally-assisted construction contracts and subcontracts be cancelled, terminated or suspended and that Respondent be declared ineligible for further contracts and subcontracts, and from extensions or modifications of any existing contracts and subcontracts, until such time that it can satisfy the Director of OFCCP that it is in compliance with Executive Order 11246 and the Secretary of Labor's regulations issued pursuant thereto.

The sanctions invoked herein shall be applicable to Respondent, its officers, subsidiaries, and divisions and all purchasers, successors, assignees and transferees.

Signed at Washington, D.C., this 24th day of June, 1980.

Ray Marshall,

Secretary of Labor.

Certificate of Service

I hereby certify that on June 24, 1980, a copy of the foregoing Decision and Administrative Order of the Secretary of Labor, was mailed, postage prepaid, to the following:

Mr. James D. Henry, Associate Solicitor for Civil Rights, U.S. Department of Labor,

Room N2414, 200 Constitution Avenue, NW., Washington, D.C. 20210.
Mr. Louis G. Ferrand, Jr., Counsel for Civil Rights, Office of the Solicitor, U.S. Department of Labor, Room N2414, 200 Constitution Avenue, NW., Washington, D.C. 20210.
Ms. Barbara Sulliyan, Division of Civil Rights, Office of the Solicitor, U.S. Department of Labor, Room N2414, 200 Constitution Avenue, NW., Washington, D.C. 20210.
Mr. Thomas F. McGuire, Counselor at Law, 300 Kings Highway East, Haddenfield, New Jersey 08033.
Mr. Christopher H. Hartenau, Attorney, U.S. Department of Housing and Urban Development, Room 10500, 410 Seventh Street, SW., Washington, D.C. 20410.
Ms. Carin Ann Clauss, Solicitor of Labor, U.S. Department of Labor, 200 Constitution Avenue, NW., Washington, D.C. 20210.Bruce A. Cohen.

U.S. Department of Labor, Office of Administrative Law Judges

In the matter of *United States Department of Housing and Urban Development,* Plaintiff, v. *S.T.C. Construction Company,* Defendant.

Case No. 77-OFCCP-5.

Christopher H. Hartenau, Esquire, Room 2051, U.S. Department of Houseing and Urban Development, Washington, DC 20410, Louis C. Ferrand, Jr., Esquire, Counsel for Civil Rights, U.S. Department of Labor, Room N 2414, 200 Constitution Avenue, NW., Washington, DC 20210, Barbara J. Sullivan, Esquire, U.S. Department of Labor, 200 Constitution Avenue, NW., Washington, DC 20210,
For the Plaintiff: William C. O'Brien, Esquire, 300 Kings Highway East, Haddonfield, New Jersey 08033, Thomas F. McGuire, Esquire, 300 Kings Highway East, Haddonfield, New Jersey 08033.
For the Defendant: Before: Rhea M. Burrow, Administrative Law Judge.

Recommended Decision

This is a motion for summary judgment brought by the United States Department of Housing and Urban Development, hereinafter referred to as HUD, and the United States Department of Labor, Office of Federal Contract Compliance Programs, referred to as OFCCP, Plaintiffs, pursuant to 41 CFR 60-30.8 and 41 CFR 60-30.23 [1] of the Rules of Practice for Administrative proceedings, against the S.T.C. Construction Company, Defendant, to enforce the contractural obligations relating to equal opportunity imposed on the defendant pursuant to Executive Order 11246, as amended (30 FR 134303) and the Secretary of Labor's implementing regulations. The Plaintiff's motion is predicated on the ground that there is no genuine issue as to any material fact regarding the Defendant S.T.C. Construction Company's failure to comply with its obligations under Executive Order 11246, as amended and the Secretary of Labor's implementing regulations.

At a hearing on May 9, 1978 on the Plaintiff's motion for summary judgment the Defendant admitted the charges stated in the motion but was permitted to introduce testimony as to extenuating circumstances connected with its failure to produce required information in this case.

Having considered the complaint, answer, motion for summary judgment, memorandum, and oral testimony and argument at the aforesaid hearing the undersigned finds:

(1) This court has jurisdiction of the action under Sections 208 and 209 of Executive Order 11246, 41 CFR 60-1.26, and 41 CFR Part 6030.

(2) The Defendant S.T.C. Construction Company was at all times material herein a Government contractor, and as such agreed to comply with Executive Order 11246, as amended, and all implementing regulations issued thereunder (Executive Order, § 202.4). Plaintiffs Secretary of Housing and Urban Development, the Secretary of Labor and Director of the Office of Federal Contract Compliance are responsible for issuance and enforcement of regulations under Executive Order 11246 found at 40 CFR Part 60.

(3) The Defendant is a federally assisted construction contractor by virtue of its participation in a contract of sale dated April 15, 1976, valued at over $3 million with the Housing Authority of the Borough of Collingswood, New Jersey for development of a low rent housing project which is partially financed with federal funds.

(4) Pursuant to Executive Order 11246, during August 1976, the Plaintiff, HUD, after giving two weeks notice and identifying the records sought to be inspected, attempted to conduct a review of affirmative action compliance on the contract at Defendant STC's place of business and employment located at 231 East Marlton Pike, Cherry Hill, New Jersey. The Defendant failed and refused to provide timely access to pertinent records requested as a part of the compliance review and deprived the Government of a crucial mechanism for monitoring and enforcing STC's compliance with its contract. The failure by defendant to furnish timely access to its records is a violation of its contractual obligations under 202 (4) and (5) of the Order, 41 CFR 60-1.7(a)(3) and 60-1.43, as well as its duties under the contractual opportunity clause at 41 CFR 60-1.4(b).

(5) The Defendant STC failed to submit Monthly Manpower Utilization Reports for itself or any of its subcontractors from the effective date of its Contract of Sale on April 15, 1976 to June 28, 1977, the date of filing of the Administrative Complaint. These reports indicate the racial and ethnic composition of contractor's workforce on each federally assisted construction project and are contractually required to be filed on a monthly basis by all federally assisted construction contractors in areas covered by imposed plans such as the Camden Plan (41 CFR Part 60-10) pursuant to rules established by the Director of OFCCP.[2]

(6) Defendant, STC failed to submit to Plaintiff signed and completed copies of the Imposed Plan Bid Conditions containing affirmative action commitments for all federal construction contractors in the Camden Plan Area as defined in 41 CFR 60-10 and required to be filed by STC and all of its subcontractors with contracts over $10,000 prior to bid openings. 41 CFR 60-10.21(a).

(7) Plaintiff notified the Defendant STC on August 17, 1976 that it had 30 days in which to show cause why enforcement proceedings should not be instituted against the company or submit the required documents sought on compliance review. A meeting was also set for September 2, 1976 to discuss STC's position. There was no response to the show cause notice letter nor did the Defendant attend the scheduled meeting. The Defendant also ignored a subsequent letter warning that a request for imposition of sanctions had been forwarded to HUD central office. In short, STC never contacted HUD with respect to compliance with the Executive Order at any time from the date of the compliance review to the date of the filing of the administrative complaint.

(8) The Defendant in its answer raised the argument that it compiled an affirmative action plan evidenced by letters to trade unions and subcontractors setting out STC's nondiscrimination policy which was sent to "OAEC." The organization was not identified but in any event is shown to have been an agency of the state and had no authority or responsibility for enforcing Executive Order 11246. Further, it was not responsive to the charge that STC failed to supply HUD with the documentation it had properly sought and requested. Such response obviously fails to raise a bona fide genuine issue of a material fact and this was admitted at the hearing on the motion for summary judgment.

(9) The Defendant STC's other explanation for noncompliance with Plaintiff's requests is that one of its executive employees who was designated to provide the requested information failed to do so.

The requirements of the Executive Order and the regulations are imposed on the contractor, not on its employees and it is the contractor's duty to see that the company's obligations are complied with by whatever means are necessary. Here, there was no attempt made to comply with HUD's discovery requests even when the Defendant had been notified of the delinquency. The answer does not raise a genuine bona-fide issue as to a material fact in controversy for failure to comply with discovery request.

The Secretary of Labor has provided for administrative and judicial enforcement of Executive Order 11246 (41 CFR 60-1.26), and hearing rules for administrative enforcement (41 CFR Part 30). These rules provide, inter alia, for Motions for Summary Judgment (41 CFR 60.23a), Recommended Decisions by an Administrative Law Judge after a hearing (41 CFR 60-30.27), the filing by the parties of

[1] 41 CFR 60-30.23(a) provides:

At any time after the expiration of 20 days from the commencement of the action, or after service of a motion for summary judgment by the respondent, the Government may move with or without supporting affidavits for a summary judgment upon all claims or any part.

[2] See, U.S. Department of Labor, Employment Standards Administration "Operations Manual: Contract Compliance in Construction" (August 30, 1976) Chapter IV: 11B(3).

exceptions to Recommended Decisions (41 CFR 60-30.28), and for a Final Administrative Order which may provide appropriate sanctions and remedies.

There is no challenge to the validity of the Order and regulations and it is well established that they have the force and effect of law. The Secretary of Labor has established lawful reporting and recordkeeping requirements pursuant to §§ 202(5), 203(a) and 301 of Executive Order 11246 which obligate federal contractors and federally assisted construction contractors to maintain and produce certain documents to facilitate enforcement of the Order. These requirements have the force and effect of law. *U.S.* v. *New Orleans Public Service, Inc. (NOPSI)*, 553 F. 2d 459 (5th Cir. 1977), petition for rehearing denied 559 F. 2d 30 (1977), petition for cert. pending; *U.S.* v. *Mississippi Power and Light Co.*, 553 F. 2d 480 (5th Cir. 1977), petition for rehearing denied 559 F. 3d (1977), petition for cert. pending; *Contractor's Ass'n of Eastern Pennsylvania* v. *Secretary of Labor*, 442 F. 2d 159 (3d Cir. 1971), cert. denied 404 U.S. 854.

(10) While good cause, cognizable under the law is not shown or alleged to exist for Defendant's failure to make, maintain, and make available to the Plaintiff its records for inspection and monitoring as to whether the Defendant has an acceptable affirmative action program which confirmed with the requirements of Executive Order 11246, amended, and the implementing regulations, there were circumstances that lend credence to Defendant's argument that the imposition of the sanction of cancellation or termination of the company's contracts would be a harsh and inequitable penalty. Some background information elicited at the hearing on May 9, 1978 indicates:

(a) William Francis Whalen, owner and President of the Defendant Company has been performing Government construction contracting since 1967 and is currently performing such contracting work.

(b) There has been no discriminatory violations alleged or demonstrated as to any of his Government contracts.

(c) Discrimination is not alleged or involved as to the current contract in issue in this proceeding.

(d) In this proceeding STC is charged with having failed to furnish requisite records to the Government as outlined in paragraphs 4, 5, and 6 above and it has admitted that it failed to do so.

(e) During 1976, Mr. Whalen, owner and President of STC was indicted on a felony charge and subjected to two lengthly trials, one in July 1976 resulting in a hung jury, and, a retrial beginning about November 1976 eventuating in his acquittal. Because of the adverse publicity bonding security for his STC Construction and Government projects had to be rearranged. In the fight for his own personal survival and STC Construction Company financial survival, the stress created domestic difficulty eventuating in a divorce proceeding. Despite the adverse problems and circumstances the work on the project herein involved was satisfactorily completed. Mr. Whalen has asked that his overall performance and record since 1967 to the present be considered along with his adverse personal circumstances with reference to any penalty or sanction provisions provided under the Order. The unusual stress situation that was thrust upon him in 1976, is urged as an atypical circumstance that does not require the usual penalty.

(11) The purpose of the regulations in 41 CFR Part 60-1 is to achieve the aims of Parts II, III, and IV of Executive Order 11246 for the promotion and insuring of equal opportunity for all persons without regard to race, color, religion, sex or national origin, employed or seeking employment with Government contractors or with contractors performing under federally assisted construction contracts. There has been no discriminatory violation alleged nor has any surfaced for consideration in this proceeding.

What is involved is the Defendant's refusal to furnish records to the Plaintiff in order to enable the Government to ascertain whether STC was in compliance with the Act. This is required by Section 202(5) of the Order which provides: "The contractor will furnish all information and reports required by Executive Order No. 11246 of September 24, 1965, and by the rules, regulations, and orders of the Secretary of Labor, or pursuant thereto, and will permit access to his books, records, and accounts by the contracting agency and the Secretary of Labor for purposes of investigation to ascertain compliance with such rules, regulations, and orders. (Underscoring supplied). Also, see 41 CFR 60-1.43.

Obviously such a requirement is essential to monitor and ascertain compliance of employers with their Government contracts.

Executive Order 11246, as amended, Section 202(6) provides, inter alia, that non compliance with any of the Secretary of Labor's rules, regulations, or orders may lead to the cancellation, termination, or suspension of the Government contractor's present contracts and its being declared ineligible for further contracts.

Therefore, I conclude that the Defendant, STC's refusal to furnish the requisite records in connection with the Government's investigation to ascertain compliance with the contract was a violation of the Order and Secretary of Labor's regulations for which sanctions may be imposed. Further, Plaintiff's motion for summary judgment is warranted and is hereby granted.

(12) Of course, apart from any discriminatory violation, which is not shown to exist in this case, the Secretary of Labor must and does have power to enforce regulations designed to enforce proper monitoring and ascertainment of violations. The purpose is to punish those who without cause refuse to furnish requisite information and records, thereby hindering the Government from assuring equal opportunity for all persons regardless of race, color, sex, or national origin and to deter others from the same or similar violations. Because of the circumstances in this particular case and testimony elicited from Respondent Whalen at the hearing that he has except for the incidents heretofore reported complied with all of his Government contracts since 1967 and is currently in compliance, that there is good reason to believe a bona fide effort will be made by him to assure personal compliance as well as compliance by STC with the Order and regulations now and in the future. Based on the entire record I recommend that the following Order designed to remedy the violations be issued.

Recommended Order

It is hereby ordered that STC Construction Company cease and desist from refusing to furnish all required information relating to its federal and federally assisted contracts and sub-contracts, now and in the future. Further, that sanction for past transgression or violation not now be imposed so long as any new contract or contracts which the company may bid that it satisfy the Director of the Government agency and the Director of Federal Contract Compliance Programs that it is and has been in compliance with and will fulfill the provisions of Executive Order 11246 and the rules, regulations and Orders issued thereunder.

Dated: May 22, 1978, Washington, D.C.

Rhea M. Burrow,

Administrative Law Judge.

[FR Doc. 80-[illegible] Filed 8-14-80; 8:45 am]

BILLING CODE 4510-27-M

Office of Pension and Welfare Benefit Programs

[Prohibited Transaction Exemption 80-63]

Exemption From the Prohibitions for Certain Transactions Involving the Enterprise Company Employees' Profit-Sharing Trust Located in Beaumont, Tex. (Exemption Application No. D-1430)

AGENCY: Department of Labor.

ACTION: Grant of individual exemption.

SUMMARY: This exemption would exempt the sale for cash by the Enterprise Company Employees' Profit Sharing Trust (the Plan) to Jefferson-Pilot Publications, Inc. (the Purchaser), a party in interest because it is the parent company of the employer whose employees are covered by the Plan, of the following Plan assets: (1) An option to purchase 53 shares of common stock of Cushing Newspapers, Inc., (2) a promissory note of Richard N. Hammell, and (3) three residential mortgage notes.

FOR FURTHER INFORMATION CONTACT: Alan H. Levitas of the Office of Fiduciary Standards, Pension and Welfare Benefit Programs, Room C-4526, U.S. Department of Labor, 200 Constitution Avenue, NW., Washington, D.C. 20216, (202) 523-8884. (This is not a toll-free number.)

SUPPLEMENTARY INFORMATION: On June 27, 1980, notice was published in the Federal Register (45 FR 43502) of the pendency before the Department of Labor (the Department) of a proposal to grant an exemption from the restrictions

of section 406(a) and 406 (b)(1) and (b)(2) of the Employee Retirement Income Security Act of 1974 (the Act) and from the taxes imposed by section 4975 (a) and (b) of the Internal Revenue Code of 1954 (the Code) by reason of section 4975(c)(1) (A) through (E) of the Code, for a transaction described in an application filed by the Purchaser, trustees of the Plan and the Enterprise Company. The notice set forth a summary of facts and representations contained in the application for exemption and referred interested persons to the application for a complete statement of the facts and representations. The application has been available for public inspection at the Department in Washington, D.C. The notice also invited interested persons to submit comments on the requested exemption to the Department. In addition the notice stated that any interested person might submit a written request that a public hearing be held relating to this exemption. The applicant has represented that he has complied with the requirements of the notification to interested persons as set forth in the notice of pendency. One public comment was received which did not relate to the transactions for which exemptive relief was proposed, but rather concerned the distribution of retirement benefits from the Plan. No requests for a hearing were received by the Department. The Department has reviewed the entire application and the comment that was received and has determined to grant the proposed exemption.

The notice of pendency was issued and the exemption is being granted solely by the Department because, effective December 31, 1978, section 102 of Reorganization Plan No. 4 of 1978 (43 FR 47713, October 17, 1978) transferred the authority of the Secretary of the Treasury to issue exemptions of the type proposed to the Secretary of Labor.

General Information

The attention of interested persons is directed to the following:

(1) The fact that a transaction is the subject of an exemption granted under section 408(a) of the Act and section 4975(c)(2) of the Code does not relieve a fiduciary or other party in interest or disqualified person with respect to a plan to which the exemption is applicable from certain other provisions of the Act and the Code. These provisions include any prohibited transaction provisions to which the exemption does not apply and the general fiduciary responsibility provisions of section 404 of the Act, which among other things, require a fiduciary to discharge his or her duties respecting the plan solely in the interest of the participants and beneficiaries of the plan and in a prudent fashion in accordance with section 404(a)(1)(B) of the Act; nor does the fact the transaction is the subject of an exemption affect the requirement of section 401(a) of the Code that a plan must operate for the exclusive benefit of the employees of the employer maintaining the plan and their beneficiaries.

(2) This exemption does not extend to transactions prohibited under section 406(b)(3) of the Act and section 4975(c)(1)(F) of the Code.

(3) This exemption is supplemental to, and not in derogation of, any other provisions of the Act and the Code, including statutory or administrative exemptions and transitional rules. Furthermore, the fact that a transaction is subject to an administrative or statutory exemption or transitional rule is not dispositive of whether the transaction is, in fact, a prohibited transaction.

Exemption

In accordance with section 408(a) of the Act and section 4975(c)(2) of the Code and the procedures set forth in ERISA Procedure 75-1 (40 FR 18471, April 28, 1975), and based upon the entire record, the Department makes the following determinations:

(a) The exemption is administratively feasible;

(b) It is in the interests of the Plan and of its participants and beneficiaries; and

(c) It is protective of the rights of the participants and beneficiaries of the Plan.

Accordingly, the restrictions of section 406 (a) and 406(b)(1) and (b)(2) of the Act and the taxes imposed by section 4975 (a) and (b) of the Code, by reason of section 4975(c)(1) (A) through (E) of the Code, shall not apply to the sale for cash by the Plan to the Purchaser of the following Plan assets; (1) an option to purchase 53 shares of common stock of Cushing Newspapers, Inc., (2) a promissory note of Richard N. Hammell, and (3) three residential morgages. The amount to be paid for the option is $102,298, provided that the amount received by the Plan is not less than the fair market value on the date of sale. The price to be paid for the note and the mortgages will be based on a 10% yield basis provided the amount received by the Plan is not less than the fair market value on the date of sale.

The availability of this exemption is subject to the express conditions that the material facts and representations contained in the application are true and complete, and that the application accurately describes all material terms of the transaction to be consummated pursuant to this exemption.

Signed at Washington, D.C. this 8th day of August 1980.

Ian D. Lanoff,

Administrator, Pension and Welfare Benefit Programs, Labor-Management Services Administration, Department of Labor.

[FR Doc. 80-24827 Filed 8-14-80; 8:45 am]

BILLING CODE 4510-29-M

[Prohibited Transaction Exemption 80-62]

Exemption From the Prohibitions for Certain Transactions Involving the Angus, Ltd., Employee Benefit and Profit-Sharing Plan and the Creative Dining Food Systems, Inc., Employee Benefit and Profit Sharing Plan Located in Raleigh, N.C. (Exemption Application Nos. D-1059 and 1238)

AGENCY: Department of Labor.

ACTION: Grant of individual exemption.

SUMMARY: This exemption exempts the sales of certain parcels of real property by the Angus, Ltd., Employee Benefit and Profit Sharing Plan (Angus Plan) to D-E-W Foods Corporation (DEW), a party in interest, and by the Creative Dining Food Systems, Inc., Employee Benefit and Profit Sharing Plan (CDFS Plan), which is the successor to the Angus Plan, to Cutown (Curacao), Inc. (Cutown), an unrelated party, followed by a leasing of the real property by Cutown to Creative Dining Food Systems, Inc. (CDFS).

EFFECTIVE DATE: October 1, 1976, as to the sale by the Angus Plan to DEW; January 13, 1978, as to the sale by the CDFS Plan to Cutown.

FOR FURTHER INFORMATION CONTACT: Gary H. Lefkowitz of the Office of Fiduciary Standards, Pension and Welfare Benefit Programs, Room C-4526, U.S. Department of Labor, 200 Constitution Avenue, NW., Washington, D.C. 20216, (202) 523-8881. (This is not a toll-free number.)

SUPPLEMENTARY INFORMATION: On June 17, 1980, notice was published in the Federal Register (45 FR 41090) of the pendency before the Department of Labor (the Department) of a proposal to grant an exemption from the restrictions of section 406(a), 406(b)(1) and 406(b)(2) of the Employee Retirement Income Security Act of 1974 (the Act) and from the sanctions resulting from the application of section 4975 of the Internal Revenue code of 1954 (the Code) by reason of section 4975(c)(1) (A) through (E) of the Code, for transactions described in applications filed on behalf of CDFS. The notice set forth a summary

of facts and representations contained in the applications for exemption and referred interested persons to the applications for a complete statement of the facts and representations. The applications have been available for public inspection at the Department in Washington, D.C. The notice also invited interested persons to submit comments on the requested exemption to the Department. In addition the notice stated that any interested person might submit a written request that a public hearing be held relating to this exemption. The applicant has represented that it has complied with the notice to interested persons requirement as set forth in the notice of pendency. No public comments and no requests for a hearing were received by the Department.

These applications were filed with both the Department and the Internal Revenue Service. However, the notice of pendency was issued and the exemption is being granted solely by the Department because, effective December 31, 1978, section 102 of Reorganization Plan No. 4 of 1978 (43 FR 47713, October 17, 1978) transferred the authority of the Secretary of the Treasury to issue exemptions of the type proposed to the Secretary of Labor.

General Information

The attention of interested persons is directed to the following:

(1) The fact that a transaction is the subject of an exemption granted under section 408(a) of the Act and section 4975(c)(2) of the Code does not relieve a fiduciary or other party in interest or disqualified person with respect to a plan to which the exemption is applicable from certain other provisions of the Act and the Code. These provisions include any prohibited transaction provisions to which the exemption does not apply and the general fiduciary responsibility provisions of section 404 of the Act, which among other things require a fiduciary to discharge his or her duties respecting the plan solely in the interest of the participants and beneficiaries of the plan and in a prudent fashion in accordance with section 404(a)(1)(B) of the Act; nor does the fact the transaction is the subject of an exemption affect the requirement of section 401(a) of the Code that a plan must operate for the exclusive benefit of the employees of the employer maintaining the plan and their beneficiaries.

(2) This exemption does not extend to transactions prohibited under section 406(b)(3) of the Act and section 4975(c)(1)(F) of the Code.

(3) This exemption is supplemental to, and not in derogation of, any other provisions of the Act and the Code, including statutory or administrative exemptions and transitional rules. Furthermore, the fact that a transaction is subject to an administrative or statutory exemption or transitional rule is not dispositive of whether the transaction is, in fact, a prohibited transaction.

Exemption

In accordance with section 408(a) of the Act and section 4975(c)(2) of the Code and the procedures set forth in ERISA Procedure 75-1 (40 FR 18471, April 28, 1975), and based upon the entire record, the Department makes the following determinations:

(a) The exemption is administratively feasible;

(b) It is in the interests of the plan and of its participants and beneficiaries; and

(c) It is protective of the rights of the participants and beneficiaries of the plan.

Accordingly, the restrictions of section 406(a), 406(b)(1) and 406(b)(2) of the Act and the sanctions resulting from the application of section 4975 of the Code, by reason of section 4975(c)(1) (A) through (E) of the Code, shall not apply to the October 1, 1976 sales by the Angus Plan to DEW of a 1.11 acre parcel and a .97 acre parcel, both located on Brownsboro Road in Winston-Salem, North Carolina, for $90,000 and $40,000, respectively, and to the January 13, 1978 sale by the CDFS Plan to Cutown of a 1.03 acre parcel located on University Parkway in Winston-Salem for $65,000, provided such amounts were not less than the fair market values of the parcels at the times of the sales.

The availability of this exemption is subject to the express condition that the material facts and representations contained in the applications are true and complete, and that the applications accurately describe all material terms of the transactions which are the subject of this exemption.

Signed at Washington, D.C., this 8th day of August, 1980.

Ian D. Lanoff,

Administrator, Pension and Welfare Benefit Programs, Labor-Management Services Administration, Department of Labor.

[FR Doc. 80-24628 Filed 8-14-80; 8:45 am]

BILLING CODE 4510-29-M

Office of the Secretary

American Motors Sales Corp., et al.; Investigations Regarding Certifications of Eligibility To Apply for Worker Adjustment Assistance

Petitions have been filed with the Secretary of Labor under section 221(a) of the Trade Act of 1974 ("the Act") and are identified in the Appendix to this notice. Upon receipt of these petitions, the Director of the Office of Trade Adjustment Assistance, Bureau of International Labor Affairs, has instituted investigations pursuant to section 221(a) of the Act and 29 CFR 90.12.

The purpose of each of the investigations is to determine whether absolute or relative increases of imports of articles like or directly competitive with articles produced by the workers' firm or an appropriate subdivision thereof have contributed importantly to an absolute decline in sales or production, or both, of such firm or subdivision and to the actual or threatened total or partial separation of a significant number or proportion of the workers of such firm or subdivision.

Petitioners meeting these eligibility requirements will be certified as eligible to apply for adjustment assistance under Title II, Chapter 2, of the Act in accordance with the provisions of Subpart B of 29 CFR Part 90. The investigations will further relate, as appropriate, to the determination of the date on which total or partial separations began or threatened to begin and the subdivision of the firm involved.

Pursuant to 29 CFR 90.13, the petitioners or any other persons showing a substantial interest in the subject matter of the investigation may request a public hearing, provided such request is filed in writing with the Director, Office of Trade Adjustment Assistance, at the address shown below, not later than August 25, 1980.

Interested persons are invited to submit written comments regarding the subject matter of the investigations to the Director, Office of Trade Adjustment Assistance, at the address shown below, not later than August 25, 1980.

The petitions filed in this case are available for inspection at the Office of the Director, Office of Trade Adjustment Assistance, Bureau of International Labor Affairs, U.S. Department of Labor, 200 Constitution Avenue, N.W., Washington, D.C. 20210.

Signed at Washington, D.C. this 11th day of August 1980.

Marvin M. Fooks,

Director, Office of Trade Adjustment Assistance.

Appendix

Petitioner: Union/workers or former workers of—	Location	Date received	Date of petition	Petition No.	Articles produced
American Motors Sales Corp.—Kansas City Zone (workers).	Overland Park, KS	7/25/80	7/21/80	TA-W-9942	Clerical positions.
Dana Corp. (UAW)	Lima, OH	7/24/80	7/24/80	TA-W-9943	Drive shafts and universal joints for heavy-duty trucks.
Detroit Window Products (workers)	Detroit, MI	7/24/80	7/18/80	TA-W-9944	Aluminum prime windows and stormwindows.
Kay Towers Antenna Co. (IUE)	Valley Forge, PA	7/21/80	7/9/80	TA-W-9945	Electronic accesories TV antennas.
Knapp King-Size Corp., Derry Shoe Co. Division (workers).	Derry, NH	7/30/80	7/28/80	TA-W-9946	Manufacture men's shoes.
Reichhold Chemical Inc. (workers)	Chestwold, DE	7/30/80	7/28/80	TA-W-9947	Handle plant waste.
United Kellering Co. (workers)	Canton, MI	7/7/80	6/28/80	TA-W-9948	Automotive dies.
Valeron Corp—Modco Tool Division (workers)	Oak Park, MI	7/24/80	7/15/80	TA-W-9949	Automotive cutting.
Wagner Electric Corp. (workers)	Sevierville, TN	7/7/80	6/23/80	TA-W-9950	Signal flashers, circuit breakers for auto industry.
Cargotainer (UAW)	Adrian, MI	7/29/80	7/23/80	TA-W-9951	Cargo containers.
Illinois Tool Works Inc.—Deltar Division (company).	Frankfort, IL	7/24/80	7/18/80	TA-W-9952	Engineered fastners and components used in automotive assembly.
Linden Products Co., Division of Ferro Corp. (workers).	Linden, TN	7/17/80	7/12/80	TA-W-9953	Body hardware—various car parts.
Logerfo Bros. (workers)	New York, NY	7/24/80	7/14/80	TA-W-9954	Riding apparel.
McGregor Sportswear (workers)	New York, NY	6/17/80	5/28/80	TA-W-9955	Men's sportswear.
Radio Corporation of America (IBEW)	Findley, OH	7/22/80	7/17/80	TA-W-9956	Integrated circuits.
Solix Sportswear Corp. (workers)	New York, NY	7/29/80	7/23/80	TA-W-9957	Jackets.
Star Cedar Proodcts (workers)	Forks, WA	6/13/80	6/9/80	TA-W-9958	Manufacture cedar shakes.
Swank Refractories Co.—Wellsville Plant (union).	Wellsville, OH	7/9/80	7/7/80	TA-W-9959	Ladle brick and gunning mix.
Allentown Manufacturing (workers)	Allentown, PA	6/27/80	6/23/80	TA-W-9960	Clothing.
Ford Motor Co.—Detroit Industrial Engine Plant (company).	Detroit, MI	5/20/80	5/15/80	TA-W-9961	Marine and industrial engines.
Geneva Rubber Co. (URW)	Geneva, OH	7/30/80	7/20/80	TA-W-9962	Molded rubber parts for autos.
Hirsch Manufacturing Corp. (workers)	Allentown, PA	6/27/80	6/23/80	TA-W-9963	Clothing.
Kaiser Steel Corp., Eagle Mt. Mine—Pellet Plant (workers).	Eagle Mt., CA	6/16/80	6/9/80	TA-W-9964	Pellets.
Knit-Wits Manufacturing (workers)	Allentown, PA	6/27/80	6/23/80	TA-W-9965	Clothing.
Midwest Plating and Chemical Corp. (workers).	Kokomo, IN	7/29/80	7/24/80	TA-W-9966	Electroplating.
Modern Metal Processing Inc. (workers)	Williamston, MI	7/29/80	7/24/80	TA-W-9967	Bumpers.
Unique Chemical and Color Corp. (workers)	Paterson, NJ	6/27/80	6/24/80	TA-W-9968	Finishing chemicals and dyes.
Gad Cartage Company (teamsters)	Dearborn, MI	7/7/80	7/2/80	TA-W-9969	Service—hauls steel to auto industry.
Gathen Ind., Inc. (workers)	Roseville, MI	7/30/80	7/24/80	TA-W-9970	Pressed steel dies.
General Electric-Niles-Mahoning Glass Plant (IUE).	Niles, OH	7/30/80	7/25/80	TA-W-9971	Production press glass.
National Twist Drill and Tool Division (workers).	Rochester, MI	7/30/80	7/22/80	TA-W-9972	Makes cutting equipment for autos.
Republic Steel Corp., Buffalo District Sales Office (workers).	Amberst, NY	7/23/80	7/18/80	TA-W-9973	Carbon and alloy hot rolled steel bars.
Republic Steel Corp., Central Alloy District, Basic Steel Plant (USWA).	Canton, OH	7/23/80	7/18/80	TA-W-9974	Raw and hot rolled carbon, alloy and stainless steel.
Republic Steel Corp., Central Alloy District, Massillon, Ohio Plant (USWA).	Massillon, OH	7/23/80	7/18/80	TA-W-9975	Hot rolled carbon, alloy, and stainless steel bars.
Republic Steel Corp., Enduro Division, Canton South Plant (union).	Canton, OH	7/23/80	7/18/80	TA-W-9976	Stainless steel plate and sheet and special metals.
Republic Steel Corp., Union Drawn Division (USWA).	Massillon, OH	7/23/80	7/18/80	TA-W-9977	Cold finished carbon, alloy, and stainless steel bars.
Elgin, Joliet & Eastern Railway Co., Gary Division (workers).	Gary, IN	6/17/80	7/31/80	TA-W-9978	Transportation of steel.
Flamingo Fashions, Inc. (workers)	Hialeah, FL	7/14/80	7/18/80	TA-W-9979	Children's tops.
Marlette Coatings (workers)	Marlette, MI	7/29/80	8/5/80	TA-W-9980	Car parts.
Midwest Rubber Co. (workers)	Deckerville, MI	7/29/80	8/5/80	TA-W-9981	Automotive rubber and plastic products.
Moeller Construction Co. (workers)	Romeo, MI	7/18/80	8/6/80	TA-W-9982	Residential construction.
N & M Handbag, Inc. (workers)	Walnut Ridge, AR	7/29/80	8/6/80	TA-W-9983	Handbags.
Robertson Shake Mill (workers)	Littell, WA	5/13/80	7/17/80	TA-W-9984	Shingles and shakes.
Thompson Steel Inc. (workers)	Roseville, MI	7/29/80	8/5/80	TA-W-9985	Cold rolled stripped steel.
Blonder Tongue Laboratories, Inc. (IBEW)	Lakewood, NJ	7/23/80	7/18/80	TA-W-9986	TV reception equipment for subscription TV.
Chamberlin Products (workers)	Akron, IN	7/29/80	7/25/80	TA-W-9987	Automotive wiring systems.
Jackson Steel Service, Inc. (workers)	Jackson, MI	7/31/80	7/29/80	TA-W-9988	Steel sales and make brakes, etc., exhaust systems.
Kraft Systems (workers)	Vista, CA	7/31/80	7/23/80	TA-W-9989	Industrial engineers.
Northern Die and Mold Co. (workers)	Bay City, MI	7/28/80	7/18/80	TA-W-9990	Plastic injection molds for the automotive industry.
Norton Laboratories, Inc. (workers)	Lockport, NY	7/29/80	7/7/80	TA-W-9991	Custom molding of plastics.
Pantasote, Inc. (URW)	London, OH	7/28/80	7/25/80	TA-W-9992	Custom injection molding for automotive parts.
Quinault Cedar Products (workers)	Neilton, WA	5/15/80	5/8/80	TA-W-9993	Cakes.
Taylor Machine Products (workers)	Taylor, MI	7/31/80	7/24/80	TA-W-9994	Machine operators and truck drivers.
American Gage & Manufacturing, Co. (MESA)	Wauseon, OH	7/29/80	7/21/80	TA-W-9995	Two wheel handcarts, appliance dolleys, and farm jacks.
Harman International Industries, Inc. (workers).	Bolivia, TN	8/1/80	7/22/80	TA-W-9996	Outside rearview auto mirrors.
Huntington Alloys, Inc. (workers)	Huntington, WV	7/29/80	7/24/80	TA-W-9997	Wrought high-nickel alloy and welding products.
Kaiser Aluminum (company)	Mobile, AL	7/31/80	7/29/80	TA-W-9998	Alum. transport tanks for gas line.
Modern Plastics Corp. (workers)	Benton Harbor, MI	5/27/80	5/22/80	TA-W-9999	Various auto parts and plastic moldings.
Modine Manufacturing Co. (workers)	Trenton, MO	7/29/80	7/24/80	TA-W-10,000	Automobile radiators.
Muskin Corporation (UFWU)	Wilkes-Barre, PA	5/13/80	5/8/80	TA-W-10,001	Above ground swimming pool parts.
Steel Slitting Co., Inc. (workers)	Elwood, In	7/28/80	7/23/80	TA-W-10,002	Process steel.
United Manufacturing Co. (workers)	Mt. Clemens, MI	7/28/80	7/24/80	TA-W-10,003	Seat belts.
HUB Material Co. (workers)	Boston, MA	4/15/80	4/22/80	TA-W-10,004	Watch parts.
KENCO Plastic, Inc. (UFCW)	Owensboro, KY	6/13/80	6/11/80	TA-W-10,005	Plastic auto parts, fire extinguishers, appliances.
Kingston Krome (workers)	Kingston, MI	5/20/80	5/13/80	TA-W-10,006	Chrome trim for cars and trucks.
Lawnlite Co., Inc. (USWA)	Portland, TN	7/29/80	7/24/80	TA-W-10,007	Aluminum patio furniture, ladders.

Appendix—Continued

Petitioner: Union/workers or former workers of—	Location	Date received	Date of petition	Petition No.	Articles produced
Melling Forging Co. (UAW)	Lansing, MI	7/28/80	7/25/80	TA-W-10,008	Automotive steering assembly components, transmission spray units, and clutch assembly parts.
Palmer Supplies Co. of Cincinnati (company)	Cincinnati, OH	7/31/80	7/25/80	TA-W-10,009	Raw material distributor.
Quanex Corp., Fabricating Division (USWA)	Shelby, OH	7/28/80	7/24/80	TA-W-10,010	Automotive exhaust systems.
Robinson Transformer Co. (IBEW)	Robinson, IL	7/28/80	7/22/80	TA-W-10,011	Transformers for stereos, electric organs, and computers.
Uniroyal, Inc. (URW)	Opelika, AL	7/15/80	7/10/80	TA-W-10,012	Tires.
Ameron, Inc., Ameron Steel & Wire Division (USWA).	Etiwanda, CA	7/28/80	7/23/80	TA-W-10,013	Rebar, pipe rod, construction wire, fabric wire products, converter rod, and billets.
Atlantic Steel Co. (USWA)	Atlanta, GA	7/31/80	7/28/80	TA-W-10,014	Wire products, nails, angles, flats rounds, rebar.
Budd Co. (UAW)	Clinton, MI	7/31/80	7/10/80	TA-W-10,015	Disc brakes.
Como Plastics (workers)	Columbus, IN	7/29/80	7/21/80	TA-W-10,016	Custom molded plastic parts.
Freeland Industries (workers)	Dearborn, MI	7/31/80	7/29/80	TA-W-10,017	Built racks for rims and chrome for auto's.
Pennwalt Corp., Lucidol Division (workers)	Genesco, NY	7/29/80	7/20/80	TA-W-10,018	Organic peroxide.
Surburban Ford Sales (IAMAW)	Arnold, MO	7/11/80	7/9/80	TA-W-10,019	Automotive dealership.
Tel-X Corp. (workers)	Farmington, MI	7/31/80	7/25/80	TA-W-10,020	Automotive prototype.
Wagner Industries, Inc. (IBEW)	Wabash, IN	7/31/80	7/28/80	TA-W-10,021	Electrical wiring harness components parts for auto industries.
Briggs-Strarron (Lock & Key Division) (workers).	Glendale, WI	7/25/80	7/18/80	TA-W-10,022	Lock and key for American-made cars.
D.A.B. Industries, Inc. (workers)	Bellefontaine, OH	7/28/80	7/25/80	TA-W-10,023	Rod and main engine bearings.
Falcon Coat & Suit Co. (workers)	Richmond Hill, NY	7/10/80	7/4/80	TA-W-10,024	Ladies coats and suits.
Four Star Corp. (UAW)	Cadillac, MI	7/25/80	7/22/80	TA-W-10,025	Drip moldings for auto trims.
General Motors Corp., GM Parts Division (workers).	Pontiac, MI	7/29/80	7/21/80	TA-W-10,026	Distribution of service parts.
Levi Strauss & Co. (ACTWU)	Rock Island, TN	7/25/80	7/14/80	TA-W-10,027	Production of boys shirts.
Maida Development Co. (workers)	Hampton, VA	7/10/80	7/8/80	TA-W-10,028	Capacitors.
Precision Spring Corp. (workers)	Canton Township, MI	7/28/80	7/24/80	TA-W-10,029	Engine and transmission rings, clips, and valve springs.
Precision Spring Corp. (workers)	Detroit, MI	7/28/80	7/24/80	TA-W-10,030	Engine and transmission rings, clips, and valve springs.

[FR Doc. 80-24778 Filed 8-14-80; 8:45 am]

BILLING CODE 4510-28-M

[TA-W-7330]

Homer Laughlin China Co.; Negative Determination Regarding Application for Reconsideration

By letter of July 9, 1980, the International Brotherhood of Pottery and Allied Workers requested administrative reconsideration of the Department of Labor's Notice of Determinations Regarding Eligibility to Apply for Worker Adjustment Assistance in the case of workers and former workers producing institutional china at plants #6, #7, and #8 of the Homer Laughlin China Company, Newell, West Virginia. The determination was published in the Federal Register on June 6, 1980, (45 FR 38176).

Pursuant to 29 CFR 90.18(c), reconsideration may be granted under the following circumstances:

(1) If it appears on the basis of facts not previously considered that the determination complained of was erroneous;

(2) If it appears that the determination complained of was based on a mistake in the determination of facts previously considered; or

(3) If, in the opinion of the Certifying Officer, a misinterpretation of facts or of the law justifies reconsideration of the decision.

The union claims that one of Homer Laughlin's customers who imports institutional china was not given adequate consideration in the Department's notice of determinations.

The Department's review showed that workers at plants #6, #7, and #8 of the Homer Laughlin China Company, Newell, West Virginia, did not meet the "contributed importantly" test of the Trade Act of 1974. The Department's survey showed that the responding customers increased their purchases of institutional china from Homer Laughlin and other domestic manufacturers in 1979 compared to 1978.

The Department does not agree with the union's claim. This customer reduced purchases from Homer Laughlin in 1979; however, Homer Laughlin increased production and sales of institutional china in that year. While the customer in question reduced its purchases from Homer Laughlin and may have increased its imports, it represented only an insignificant percentage of Homer Laughlin's sales in 1979 and 1980.

Conclusion

After review of the application and the investigative file, I conclude that there has been no error or misinterpretation of fact or misinterpretation of the law which would justify reconsideration of the Department of Labor's prior decision. The application is, therefore, denied.

Signed at Washington, D.C., this 8th day of August 1980.

Harry J. Gilman,

Supervisory International Economist, Office of Foreign Economic Research.

[FR Doc. 80-24773 Filed 8-14-80; 8:45 am]

BILLING CODE 4510-28-M

[TA-W-6832]

Brown Shoe Co.; Negative Determination Regarding Application for Reconstruction

By an application dated July 1, 1980, counsel for the petitioner requested administrative reconsideration of the Department of Labor's Negative Determination Regarding Eligibility to Apply for Worker Adjustment Assistance in the case of workers and former workers at the St. Louis, Missouri Warehouse of Brown Shoe Company. The determination was published in the Federal Register on June 27, 1980 (45 FR 43488).

Pursuant to 29 CFR 90.18(c), reconsideration may be granted under the following circumstances:

(1) If it appears on the basis of facts not previously considered that the determination complained of was erroneous;

(2) If it appears that the determination complained of was based on a mistake in the determination of facts previously considered; or

(3) If, in the opinion of the Certifying Officer, a misinterpretation of facts or of the law justifies reconsideration of the decision.

The counsel for the petitioner claims that by focussing on 1979 and the first quarter of 1980, the Department was too restrictive, failing to give appropriate weight to increasing import effects on Brown Shoe's decision to close the warehouse. The counsel also claims that the Department failed to give appropriate weight to unspecified

Brown's customers of women's shoes, who switched to imports and that the Department failed to consider a Brown Shoe Company letter of March 28, 1980, ascribing increased import penetration as a substantial cause for closing the warehouse.

A review of the case file indicates that the workers failed to meet the "contributed importantly" test of Section 222 of the Trade Act of 1974. The Department's survey of customers indicated that most customers which decreased purchased of woman's dress shoes from Brown in 1979 and the first quarter of 1980, did not increase purchase of imported women's dress shoes during the same period and most surveyed customers which increased import purchases in 1979 and the first quarter of 1980 also increased purchases from other domestic sources during the same period. The Department focussed on developments in 1979 and the first quarter of 1980, because under the Act, no certification could cover layoffs which occurred more than one year prior to the date of the petition which was January 9, 1980. The Department's survey of the Brown Warehouse's customers indicated a decreasing reliance on imports. Finally, in its investigation the Department did take into account the company's position that imports were a factor in the Warehouse's closing.

Conclusion

After review of the application and the invested file, I conclude that there has been no error or misinterpretation of fact or misrepresentation of the law which would justify reconsideration of the Department of Labor's prior decision. The application is, therefore, denied.

Signed at Washington, D.C. this 8th day of August 1980.

James F. Taylor,

Director, Office of Management Administration and Planning.

[FR Doc. 80-24774 Filed 8-14-80; 8:45 am]

BILLING CODE 4510-28-M

[TA-W-8931]

Phoenix Forging Co.; Termination of Investigation

Pursuant to section 221 of the Trade Act of 1974, an investigation was initiated on June 23, 1980 in response to a worker petition received on June 11, 1980 which was filed by the Boilermakers Local 1506 on behalf of workers and former workers producing pipe flanges, tank flanges, transition pipe connectors and commercial forgings at Phoenix Forging Company, Catasaugua, Pennsylvania.

The Notice of Investigation was published in the Federal Register on June 27, 1980 (45 FR 43494-5). No public hearing was requested and none was held.

In a letter dated July 16, 1980 the petitioner requested withdrawal of the petition. On the basis of the withdrawal, continuing the investigation would serve no purpose. Consequently, the investigation has been terminated.

Signed at Washington, D.C. this 8th day of August 1980.

Marvin M. Fooks,

Director, Office of Trade Adjustment Assistance.

[FR Doc. 80-24775 Filed 8-14-80; 8:45 am]

BILLING CODE 4510-28-M

[TA-W-8609-11, 8614]

General Motors Corp.; Certification Regarding Eligibility To Apply for Worker Adjustment Assistance

In accordance with Section 223 of the Trade Act of 1974 (19 U.S.C. 2273) the Department of Labor herein presents the results of an investigation regarding certification of eligibility to apply for worker adjustment assistance.

In order to make an affirmative determination and issue a certification of eligibility to apply for adjustment assistance, each of the group eligibility requirements of Section 222 of the Act must be met. It is determined in this case that all of the requirements have been met.

The investigation was initiated on June 9, 1980 in response to a petition which was filed by the United Automobile, Aerospace and Agricultural Implement Workers of America on behalf of workers at the component parts plants of General Motors Corporation listed in the appendix.

In order to determine if increased imports contributed importantly to production and employment declines at General Motors Corporation component parts plants, the Department sought to determine the degree to which each facility was integrated into the production of General Motors cars, trucks, vans, and general utility vehicles which have been subject to import injury. Where substantial integration was established the Department considered imports of "like or directly competitive" cars, trucks, vans and general utility vehicles in determining import injury to workers producing component parts at the plants.

The Department has determined that increased imports contributed importantly to the decline in sales or production and to total or partial separations of workers at 18 of General Motors Corporation's car and truck assembly plants (TA-W-6783, 6917, 6999-7000, 7009, 7015-16, 7059, 7071, 7073-76, 7078-82). Workers at these plants are engaged in production of one or more of the following car or truck lines: mid-size, standard and luxury/specialty cars, pick-up trucks, vans, and general utility vehicles.

During the course of the investigation, it was established that each of the component parts plants listed in the appendix produced a significant proportion of its output for use in the GM car and truck lines which have been subject to import injury.

Conclusion

After careful review of the facts obtained in the investigation, I conclude that increases of imports of articles like or directly competitive with mid-size, standard and luxury/specialty automobiles, vans, utility vehicles and pick-up trucks produced at final assembly plants of General Motors Corporation contributed importantly to the decline in sales or production and to the total or partial separation of workers at the component parts plants listed in the appendix. In accordance with the provisions of the Act, I make the following certification:

"All workers of the component parts plants of General Motors Corporation listed in the appendix who became totally or partially separated from employment on or after the impact date listed in the appendix are eligible to apply for adjustment assistance under Section 223 of the Trade Act of 1974."

Signed at Washington, D.C. this 8th day of August 1980.

James F. Taylor,

Director, Office of Management, Administration and Planning.

Appendix

TA-W	Plant and location	Impact date
8609	Fisher Body Division, Mansfield, Ohio.	December 1, 1979
8610	AC Spark Plug Division, Milwaukee Operations, Oak Creek, Wis..	January 1, 1980
8611	Rochester Products Division, Rochester, N.Y..	December 1, 1979
8614	Delco-Remy Division, Meridian, Miss..	May 1, 1980

[FR Doc. 80-24776 Filed 8-14-80; 8:45 am]

BILLING CODE 4510-29-M

[TA-W-8779].

Mogadore Patterns Inc.; Termination of Investigation

Pursuant to section 221 of the Trade Act of 1974, an investigation was initiated on June 16, 1980 in response to a worker petition received on May 30, 1980 which was filed on behalf of workers and former workers producing patterns for tire molds at Mogadore Patterns, Inc., Akron, Ohio.

The Notice of Investigation was published in the Federal Register on June 27, 1980 (45 FR 43496–8). No public hearing was requested and none was held.

In a letter dated July 28, 1980 the petitioners requested withdrawal of the petition. On the basis of the withdrawal, continuing the investigation would serve no purpose. Consequently, the investigation has been terminated.

Signed at Washington, D.C. this 8th day of August 1980.

Marvin M. Fooks,

Director, Office of Trade Adjustment Assistance.

[FR Doc. 80-24777 Filed 8-14-80; 8:45 am]

BILLING CODE 4510-28-M

MERIT SYSTEMS PROTECTION BOARD

[Docket No. Cons. 80-1]

Extension of Time To File Amicus Briefs, Disciplinary Actions Based on Off-Duty Misconduct Cases

AGENCY: Merit Systems Protection Board.

ACTION: Notice of extension of time to file amicus brief in Board proceedings.

SUMMARY: On July 18, 1980 by notice published in the Federal Register (45 FR 48290), the Boad announced the opportunity for all interested parties to file amicus briefs in a consolidated action captioned "In Re Off-Duty Misconduct Cases, MSPB Docket No. Cons. 80-1." Additionally, the Board set forth several issues to be addressed and identified a number of court decisions relevant to those issues. It was further requested that in order to receive consideration the briefs be submitted to the Board on or before August 18, 1980.

Since this notice was published the Board has received a number of requests to extend the time for filing. One such request submitted by the Office of Personnel Managment was granted, extending the time for its filing until September 8, 1980. The Board has determined, however, that rather than continuing to grant such requests on an individual basis, it would be more efficient to generally extend the time for filing. Accordingly, the Board hereby extends the time for filing amicus briefs in this aciton to September 8, 1980. Any parties desiring to file responsive briefs must do so by September 17. Briefs and responses may be submitted by mailing or delivering them to the address listed below.

ADDRESS: Office of the Secretary, Merit Systems Protection Board, Room 226, 1717 H Street, NW, Washington, D.C. 20419, (202) 632–4525.

Issued on August 12, 1980 at Washington, D.C. by Order of the Board.

Ronald P. Wertheim,

Member.

[FR Doc. 80-24772 Filed 8-14-80; 8:45 am]

BILLING CODE 6325-01-M

NATIONAL SCIENCE FOUNDATION

Advisory Committee for Astronomy; Meeting

In accordance with the Federal Advisory Committee Act, Pub. L. 92–463, as amended, the National Science Foundation announces the following meeting:

Name: Advisory Committee for Astronomy.
Date and time: September 24, 8:30 am–5 pm. September 25, 8:30 am–5 pm.
Place: Sacramento Peak Observatory, Sunspot, N. Mex.
Type of Meeting: Open.
Contact person: Dr. William E. Howard, Director, Division of Astronomical Sciences, Room 615, National Science Foundation, Washington, DC 20550.
Summary Minutes: May be obtained from the contact person at the above stated address.
Purpose of Committee: To provide advice and recommendations concerning research programs, proposals, and projects in NSF funded astronomy with the objective of achieving the highest quality forefront research for the funds allocated. To provide advice and recommendations concerning short range and long range plans in astronomy, including a recommendation of relative priorities.
Agenda:

September 24, 1980

A.M. I. Introductory Remarks
II. Minutes of Previous Meeting
III. Short Status Reports
IV. Discussion of the Budget
V. Status of the Astronomy Survey Committee Deliberations
VI. Galactic and Extragalactic Program Report
P.M. VII. Astronomy Research Section Topics
VIII. Sacramento Peak Observatory Review

September 25, 1980

IX. Status of Dark Sky Site Survey
A.M. X. Astronomy Centers Section Topics
XI. Prioritization of Astronomy Initiatives Plan
XI. Prioritization of AID (continued)
P.M. XII. Discussion of Problems in Astronomy
XIII. Critique of Meeting.

Dated: August 12, 1980.

M. Rebecca Winkler,

Committee Management Coordinator.

[FR Doc. 80-24748 Filed 8-14-80; 8:45 am]

BILLING CODE 7555-01-M

Advisory Committee for Information Science and Technology; Meeting

In accordance with the Federal Advisory Act, Pub. L. 92–463, as amended, the National Science Foundation announces the following meeting:

Name: Advisory Committee for Information Science & Technology.
Date and time: September 4 and 5, 1980, 9 a.m. to 4 p.m. each day.
Place: Room 540, National Science Foundation, 1800 G Street, NW, Washington, D.C. 20550.
Type of Meeting: Part Open—Open 9/4—9:00 a.m. to 4:00 p.m.—Closed 9/5—9:00 a.m. to 4:00 p.m.
Contact Person: Mrs. Darcey Higgins, Room 1250, National Science Foundation, Washington, D.C. 20550. Telephone: 202/357-9572. Persons planning to attend should notify Mrs. Higgins by August 28, 1980.
Summary Minutes: May be obtained from the Contact Person, at the above stated address.
Purpose of Committee: To provide advice, recommendations, and oversight concerning support for activities related to the Foundation's program in information science and technology.
Agenda:

Open—September 4, 1980

Welcome and Introductory Remarks
Review of the Division of Information Science and Technology Activities for FY 1980
Working Group on Information Technology: discussion of Meeting and Report
Organizational Locus of IST
Miscellanea
Open Public Participation

Closed—September 5, 1980

Review and comparison of declined proposals (and supporting documentation) with the successful awards under the division of Information Science and Technology, including review of peer review materials and other privileged material.
Reason for closing: the meeting will deal with a review of grants and declinations in which the Committee will review materials containing the names of applicant institutions and principal investigators and privileged information contained in declined proposals. This meeting will also include a review of peer review documentation pertaining to applicants.

Any non-exempt material that may be discussed at this meeting (proposals that have been awarded) will be inextricably intertwined with the discussion of exempt materials and no further separation is practical. These matters are within exemptions (4) and (6) of 5 U.S.C. 552b(c) the Government in the Sunshine Act.

Authority to Close Meeting: This determination was made by the Committee Management Officer pursuant to provisions of Section 10(d) of Pub. L. 92-463. The Committee Management Officer was delegated the authority to make such determinations by the Director, NSF, on July 6, 1979.

Dated: August 12, 1980.

M. Rebecca Winkler,

Committee Management Coordinator.

[FR Doc. 80-24744 Filed 8-14-80; 8:45 am]

BILLING CODE 7555-01-M

Advisory Committee for Ocean Sciences; Meeting

In accordance with the Federal Advisory Committee Act, as amended, Pub. L. 92-463, the National Science Foundation announces the following meeting:

Name: Subcommittee on Ship Operations of the Advisory Committee for Ocean Sciences.

Date and time: September 17, 1980—9:00 A.M. to 5:00 P.M., September 18, 1980—9:00 A.M. to 5:00 P.M.

Place: National Science Foundation, Washington, DC 20550, Room 642.

Type of Meeting: Closed.

Contact: Ms. Mary K. Johrde, Head, Office for Oceanographic Facilities and Support (OFS), National Science Foundation, Room 613, Washington, DC 20550, telephone (202) 357-7837.

Purpose of ad hoc subcommittee: To provide OFS expert advice concerning ship operations support requested by major oceanographic institutions.

Agenda: Detailed review and evaluation of proposals for support of oceanographic ships.

Reason for Closing: The proposals being reviewed contain information of a proprietary or confidential nature, including technical information, institutional financial data, and personal information concerning individuals associated with the proposals. These matters are within exemptions (4) and (6) of 5 U.S.C., 552b(c), Government in the Sunshine Act.

Authority to close meeting: This determination was made by the Committee Management Officer pursuant to provisions of Section 10(d) of Pub. L. 92-463. The Committee Management Officer was delegated the authority to make such determinations by the Director, NSF, on July 6, 1979.

Dated: August 12, 1980.

M. Rebecca Winkler,

Committee Management Coordinator.

[FR Doc. 80-24747 Filed 8-14-80; 8:45 am]

BILLING CODE 7555-01-M

Advisory Committee for Ocean Sciences; Meeting

In accordance with the Federal Advispry Committee Act, as amended, Pub. L. 92-463, the National Science Foundation announces the following meeting:

Name: Subcommittee on Acquisition and Maintenance of the Advisory Committee for Ocean Sciences.

Date and time: September 24, 1980—8:30 A.M. to 5:00 P.M., September 25, 1980—8:30 A.M. to 5:00 P.M.

Place: National Science Foundation, Washington, DC 20550, Room 642 and 643.

Type of meeting: Closed.

Contact person: Ms. Mary K. Johrde, Head, Office for Oceanographic Facilities and Support (OFS), National Science Foundation, Room 613, Washington, DC 20550, telephone (202) 357-7837.

Purpose of ad hoc subcommittee: To provide OFS expert advice concerning support of specific equipment items requested by major oceanographic institution.

Agenda: Detailed review and evaluation of proposals for support of permanent shipboard scientific installations and improvements for basic ship operations.

Reason for closing: The proposals being reviewed contain information of a proprietary or confidential nature, including technical information, institutional financial data, and personal information concerning individuals associated with the proposals. These matters are within exemptions (4) and (6) of 5 U.S.C. 552b(c), Government in the Sunshine Act.

Authority to close meeting: This determination was made by the Committee Management Officer pursuant to provisions of Section 10(d) of Pub. L. 92-463. The Committee Management Officer was delegated the authority to make such determinations by the Director, NSF, on July 6, 1979.

Dated: August 12, 1980.

M. Rebecca Winkler,

Committee Management Coordinator.

[FR Doc. 80-24750 Filed 8-14-80; 8:45 am]

BILLING CODE 7555-01-M

Advisory Committee for Ocean Sciences; Meeting

In accordance with the Federal Advisory Committee Act, as amended, Pub. L. 92-463, the National Science Foundation announces the following meeting:

Name: Subcommittee on Oceanographic Instrumentation and Shipboard Technicians of the Advisory Committee for Ocean Sciences.

Date and Time: September 30, 1980, 9 a.m. to 5 p.m.; October 1, 1980, 9 a.m. to 5 p.m.

Place: National Science Foundation, Washington, DC 20550, Room 321 and 642.

Type of Meeting: Closed.

Contact Person: Ms. Mary K. Johrde, Head, Office for Oceanographic Facilities and Support (OFS), National Science Foundation, Room 613, Washington, DC 20550, telephone (202) 357-7837.

Purpose of Ad Hoc Subcommittee: To provide OFS expert advice concerning technical support and scientific instrumentation requested by major oceanographic institutions.

Agenda: Detailed review and evaluation of propsals for support of oceanographic instrumentation and shipboard technicians.

Reason for Closing: The proposals being reviewed contain information of a proprietary or confidential nature, including technical information, institutional financial data, and personal information concerning individuals associated with the proposals. These matters are within exemptions (4) and (6) of 5 U.S.C., 552b(c), Government in the Sunshine Act.

Authority To Close Meeting: This determination was made by the Committee Management Officer pursuant to provisions of section 10(d) of Pub. L. 92-463. The Committee Management Officer was delegated the authority to make such determinations by the Director, NSF, on July 6, 1979.

Dated: August 12, 1980.

M. Rebecca Winkler,

Committee Management Coordinator.

[FR Doc. 80-24750 Filed 8-14-80; 8:45 am]

BILLING CODE 7555-01-M

Advisory Committee for Policy Research and Analysis, Subcommittee on Environment, Energy, and Resources; Meeting

In accordance with the Federal Advisory Committee Act, Pub. L. 92-463, as amended, the National Science Foundation announces the following meeting:

Name: Advisory Committee for Policy Research and Analysis, Subcommittee on Environment, Energy, and Resources.

Date and Time: September 5, 1980—9:00 a.m. to 4:30 p.m.

Place: Room 642, National Science Foundation, 1800 G Street, NW, Washington, DC 20550.

Type of Meeting: Open.

Contact Person: Ms. Sharon Dyer, Division of Science Resources Studies, Directorate for Scientific, Technological, and International Affairs, Room L-611, National Science Foundation, Washington, DC 20550. Telephone (202) 634-4666. Anyone who plans to attend should contact Ms. Dyer by September 2, 1980.

Summary Minutes: May be obtained from the contact person, Ms. Dyer, at the above address.

Purpose of Committee: To provide advice, recommendations, and oversight

concerning program emphases and directions of the EER Group in the Division of PRA.

Agenda: Friday, September 5, 1980:

9:00 a.m.—Plenary Session 10:00 a.m.—Review of PRA/EER intramural client analytic support and extramural research activities 1:15 p.m.—Goals and directions of PRA/EER Programs

Each of the EER program managers will describe his intramural and extramural activities. A general discussion of ongoing EER mission activities will follow these presentations.

Emphasis will be given to a consideration of ways to broaden the base of EER/S&T activities in the performer reviewer community.

4:30 p.m.—Adjournment

Dated: August 12, 1980.

M. Rebecca Winkler,

Committee Management Coordinator.

[FR Doc. 80-24745 Filed 8-14-80; 8:45 am]

BILLING CODE 7555-01-M

Advisory Council Steering Committee; Meeting

In accordance with the Federal Advisory Committee Act, Pub. L. 92-463, as amended, the National Science Foundation announces the following meeting:

Name: Steering Committee of the NSF Advisory Council.

Place: Room 536, National Science Foundation, 1800 G Street NW., Washington, D.C. 20550.

Date and Time: September 3, 1980—9:00 a.m. to 5:00 p.m.

Type of Meeting: Open.

Contact Person: Ms. Jeanne Hudson, Executive Secretary, NSF Advisory Council, National Science Foundation, Room 518, 1800 G Street NW., Washington, D.C. 20550, Telephone 202/357-9433.

Purpose of Steering Committee: The purpose of the Steering Committee, composed of members of the NSF Advisory Council, is to assist the Chairperson and Foundation staff in planning Council activity and related matters not requiring the formation of a separate task group.

Summary Minutes: May be obtained from the contact person at above stated address.

Agenda: To review with cognizant NSF staff the issues being studied by the four task groups and other issues of general concern.

Dated: August 12, 1980.

M. Rebecca Winkler,

Committee Management Coordinator.

[FR Doc. 80-24743 Filed 8-14-80; 8:45 am]

BILLING CODE 7555-01-M

Task Group No. 9 Advisory Council; Meeting

In accordance with the Federal Advisory Committee Act, Pub. L. 92-463, the National Science Foundation announces the following meeting:

Name: Task Group No. 9 of the NSF Advisory Council.

Place: Room 523, National Science Foundation, 1800 G Street, N.W., Washington, D.C. 20550.

Date: Friday, September 12, 1980.

Time: 9:00 a.m. to 5:00 p.m.

Type of Meeting: Open.

Contact Person: Mr. Ronald R. La Count, NSF Liaison, Task Group No. 9 of NSF Advisory Council, National Science Foundation, Room 615, 1800 G Street, N.W., Washington, D.C. 20550 Telephone (202) 357-9450.

Purpose of Task Group: The purpose of the Task Group, composed of members of the NSF Advisory Council, is to provide the full Advisory Council with a mechanism to consider numerous issues of interest to the Council that have been assigned by the National Science Foundation.

Summary Minutes: May be obtained from the contact person at above stated address.

Agenda: The Task Group is asked to study and review available information on multinational research projects including such issues as financial support, governance, quality/quantity of research output, cost-effectiveness, etc.; and to discuss advantages/disadvantages of multinational support for the next generation telescope, accelerator and the Ocean Margin Drilling Program.

Dated: August 12, 1980.

M. Rebecca Winkler,

Committee Management Coordinator.

[FR Doc. 80-24746 Filed 8-14-80; 8:45 am]

BILLING CODE 7555-01-M

NUCLEAR REGULATORY COMMISSION

[Docket No. 413A]

Duke Power Co.; Receipt of Additional Antitrust Information; Time for Submission of Views on Antitrust Matters

Duke Power Company, pursuant to Section 103 of the Atomic Energy Act of 1954, as amended, has filed information requested by the Attorney General for Antitrust Review as required by 10 CFR Part 50, Appendix L. This information concerns two proposed additional ownership participants, the North Carolina Electric Membership Corporation and the Saluda River Electric Cooperative, Inc. for the Catawba Nuclear Station, Unit 1. The current holder of the construction permit is Duke Power Company.

The information was filed in connection with the application by Duke Power Company for construction permits and operating licenses for two pressurized water reactors. Construction was authorized on August 7, 1975 at the Catawba site located in Mecklenburg County, North Carolina. Although the Catawba facilities consist of two nuclear power plants, the proposed action affects only Catawba Nuclear Station, Unit 1.

The original application was dated November 10, 1972. The Notice of Receipt of Application for Cosntruction Permits and Facility Licenses and Availability of Applicants's Environmental Report; Time for Submission of Views on Antitrust Matters was published in the Federal Register on December 7, 1972 (37 FR 26053). Previously, the Notice of Hearing had been published in the Federal Register on December 1, 1972 (37 FR 25560).

A copy of the above documents are available for public examination and copying for a fee at the Commission's Public Document Room, 1717 H Street, NW., Washington, D.C. 20555 and at the York County Library, 325 South Oakland Avenue, Rock Hill, South Carolina.

Any person who wishes to have his views on the antitrust matters with respect to the North Carolina Electric Membership Corporation and the Saluda River Electric Cooperative, Inc. presented to the Attorney General for consideration or who desires additional information to the U.S. Nuclear Regulatory Commission, Washington, D.C. 20555, Attention: Chief, Utility Finance Branch, Office of Nuclear Reactor Regulation, on or before October 7, 1980.

Dated at Bethesda, Md., this 30th day of July, 1980.

For the Nuclear Regulatory Commission.

A. Schwencer,

Acting Chief, Licensing Branch No. 3 Division of Licensing.

[FR Doc. 80-24004 Filed 8-7-80; 8:45 am]

BILLING CODE 7590-01-M

[Docket No. 50-320]

Metropolitan Edison Co., Jersey Central Power and Light Co., Pennsylvania Electric Co.; Availability of Draft Programmatic Environmental Impact Statement for Decontamination of Three Mile Island Nuclear Station, Unit 2

Pursuant to the National Environmental Policy Act of 1969 and the United States Nuclear Regulatory Commission's regulations in 10 CFR Part 51, notice is hereby given that a Draft Programmatic Environmental Impact Statement prepared by the Commission's Office of Nuclear Reactor Regulation related to the proposed decontamination and disposal of radioactive wastes resulting from the March 28, 1979, accident at Three Mile Island Nuclear Station, Unit 2, located in Dauphin County, Pennsylvania, is

available for inspection by the public in the Commission's Public Document Room at 1717 H Street, N.W., Washington, D.C., and in the local public document rooms at the State Library of Pennsylvania, Government Publications Section, Education Building, Commonwealth and Walnut Streets, Harrisburg, Pennsylvania 17126, and at the York College of Pennsylvania, Country Club Road, York, Pennsylvania 17405. The Draft Statement is also being made available at the Pennsylvania State Clearinghouse, Governor's Budget Office, Intergovernmental Reglations Division, P.O. Box 1323, Harrisburg, Pennsylvania 17120, and at the Tri-County Regional Planning Commission, Shore Drive Office Center, Building No. 2, Suite 221, 2001 N. Front Street, Harrisburg, Pennsylvania 17102. Requests for copies of the Draft Programmatic Environmental Impact Statement should be addressed to the U.S. Nuclear Regulatory Commission, Washington, D.C. 20555, Attention: Director, Division of Technical Information and Document Control.

Pursuant to 10 CFR Part 51, interested persons may submit comments on the Draft Programmatic Environmental Impact Statement for the Commission's consideration. Federal and State agencies are being provided with copies of the Statement (local agencies may obtain these documents upon request). Comments are due by October 6, 1980. Comments by Federal, State, and local officials, or other persons received by the Commission will be made available for public inspection at the Commission's Public Document Room in Washington, D.C., and in the local public document rooms. Upon consideration of comments submitted with respect to the Draft Programmatic Environmental Impact Statement, the Commission's staff will prepare a Final Programmatic Environmental Impact Statement, the availability of which will be published in the Federal Register.

Comments on the Draft Programmatic Environmental Impact Statement from interested persons of the public should be addressed to the U.S. Nuclear Regulatory Commission, Washington, D.C. 20555, Attention: Director, Three Mile Island Program Office. A related document which may be of interest is NUREG-0698, "NRC Plan for Cleanup Operations at Three Mile Island Unit 2." This NRC Plan defines the functional role of the NRC in the cleanup operations at Three Mile Island Unit 2 to assure that agency regulatory responsibilities and objectives will be fulfilled. Copies will be provided upon request as described above.

Dated at Bethesda, Maryland, this 11th day of August 1980.

For the Nuclear Regulatory Commission.

Bernard J. Snyder,

Program Director, Three Mile Island Program Office, Office of Nuclear Reactor Regulation.

[FR Doc. 80-24481 Filed 8-14-80; 8:45 am]

BILLING CODE 7590-01-M

[Dockets Nos. 50-317 and 318]

Baltimore Gas & Electric Co.; Issuance of Amendments to Facility Operating Licenses

The U.S. Nuclear Regulatory Commission (the Commission) has issued Amendment Nos. 44 and 27 to Facility Operating Licenses Nos. DPR-53 and DPR-69, issued to Baltimore Gas and Electric Company, which revised Technical Specifications for operation of the Calvert Cliffs Nuclear Power Plant, Units Nos. 1 and 2. The amendments are effective as of the date of issuance.

The amendments modify paragraph 4.5.1.b and add a new paragraph 4.5.1.f to the TS Surveillance Requirements for the Safety Injection (SI) tanks to authorize a change in the location where samples are taken when SI tank level increases are routinely made.

The application for the amendments complies with the standards and requirements of the Atomic Energy Act of 1954, as amended (the Act), and the Commission's rules and regulations. The Commission has made appropriate findings as required by the Act and the Commission's rules and regulations in 10 CFR Chapter I, which are set forth in the license amendments. Prior public notice of the amendments was not required since the amendments do not involve a significant hazards consideration.

The Commission has determined that the issuance of these amendments will not result in any significant environmental impact and that pursuant to 10 CFR 51.5(d)(4) an environmental impact statement, or negative declaration and environmental impact appraisal need not be prepared in connection with issuance of the amendments.

For further details with respect to this action, see (1) the application for amendment dated July 14, 1980, (2) Amendment Nos. 44 and 27 to License Nos. DPR-53 and DPR-69, and (3) the Commission's related Safety Evaluation. All of these items are available for public inspection at the Commission's Public Document Room, 1717 H Street, N.W., Washington, D.C. and at the Calvert County Library, Prince Frederick, Maryland. A copy of items, (2) and (3) may be obtained upon request addressed to the U.S. Nuclear Regulatory Commission, Washington, D.C. 20555, Attention: Director, Division of Licensing.

Dated at Bethesda, Maryland, this 1st day of August 1980.

For the Nuclear Regulatory Commission.

Robert A. Clark,

Chief, Operating Reactors Branch No. 3, Division of Licensing.

[FR Doc. 80-24735 Filed 8-14-80; 8:45 am]

BILLING CODE 7590-01-M

Draft Regulatory Guide; Issuance and Availability

The Nuclear Regulatory Commission has issued for public comment a draft of a new guide planned for its Regulatory Guide Series together with a draft of the associated value/impact statement. This series has been developed to describe and make available to the public methods acceptable to the NRC staff of implementing specific parts of the Commission's regulations and, in some cases, to delineate techniques used by the staff in evaluating specific problems or postulated accidents and to provide guidance to applicants concerning certain of the information needed by the staff in its review of applications for permits and licenses.

The draft guide, temporarily identified by its task number, OH 941-4 (which should be mentioned in all correspondence concerning this draft guide), is entitled "Information Relevant To Ensuring That Occupational Radiation Exposures at Uranium Mills Will Be as Low as Is Reasonably Achievable" and is intended for Division 8, "Occupational Health." It is being developed to provide design criteria and administrative practices acceptable to the NRC staff for maintaining occupational exposures as low as is reasonably achievable in uranium mills.

This draft guide and the associated value/impact statement are being issued to involve the public in the early stages of the development of a regulatory position in this area. They have not received complete staff review and do not represent an official NRC staff position.

Public comments are being solicited on both drafts, the guide (including any implementation schedule) and the draft value/impact statement. Comments on the draft value/impact statement should be accompanied by supporting data. Comments on both drafts should be sent to the Secretary of the Commission, U.S. Nuclear Regulatory Commission, Washington, D.C. 20555, Attention: Docketing and Service Branch, by October 15, 1980.

Although a time limit is given for comments on these drafts, comments and suggestions in connection with (1) items for inclusion in guides currently being developed or (2) improvements in all published guides are encouraged at any time.

Regulatory guides are available for inspection at the Commission's Public Document Room, 1717 H Street NW., Washington, D.C. Requests for single copies of draft guides (which may be reproduced) or for placement on an automatic distribution list for single copies of future draft guides in specific divisions should be made in writing to the U.S. Nuclear Regulatory Commission, Washington, D.C. 20555, Attention: Director, Division of Technical Information and Document Control. Telephone requests cannot be accommodated. Regulatory guides are not copyrighted, and Commission approval is not required to reproduce them.

(5 U.S.C. 552(a))

Dated at Rockville, Maryland, this 6th day of August 1980.

For the Nuclear Regulatory Commission.

Karl R. Goller,

Director, Division of Siting, Health and Safeguards Standards, Office of Standards Development.

[FR Doc. 80-24734 Filed 8-14-80; 8:45 am]

BILLING CODE 7590-01-M

[Dockets Nos. 50-269, 50-270 and 50-287]

Duke Power Co.; Issuance of Amendments to Facility Operating Licenses

The U.S. Nuclear Regulartory Commission (the Commission) has issued Amendments Nos. 85, 85, and 82 to Facility Operating Licenses Nos. DPR-38, DPR-47, and DPR-55, respectively, issued to Duke Power Company (the licensee), which revised the Station's common Technical Specifications for operation of the Oconee Nuclear Station, Units Nos. 1, 2 and 3, located in Oconee County, South Carolina. These amendments are effective as of the date of issuance.

These amendments revise the Technical Specifications for Unit No. 2 by exending on a temporary basis the allowable period of inoperability of the "2B" High Pressure Injection Pump through August 15, 1980. This action was due to a potential power shortage in the Duke Power Company service area.

The application for the amendments complies with the standards and requirements of the Atomic Energy Act of 1954, as amended (the Act), and the Commission's rules and regulations. The Commission has made appropriate findings as required by the Act and the Commission's rules and regulations in 10 CFR Chapter I, which are set forth in the license amendments. Prior public notice of these amendments was not required since the amendments do not involve a significant hazards consideration.

The Commission has determined that the issuance of these amendments will not result in any significant environmental impact and that pursuant to 10 CFR 51.5(d)(4) an environmental impact statement, or negative declaration and environmental impact appraisal need not be prepared in connection with issuance of these amendments.

For further details with respect to this action, see (1) the application for amendments dated July 31, 1980, (2) Amendments Nos. 85, 85, and 82 to Licenses Nos. DPR-38, DPR-47 and DPR-55, respectively, and (3) the Commission's related Safety Evaluation. All of these items are available for public inspection at the Commission's Public Document Room, 1717 H Street, N.W., Washington, D.C. and at the Oconee County Library, 201 South Spring Street, Walhalla, South Carolina. A copy of items (2) and (3) may be obtained upon request addressed to the U.S. Nuclear Regulatory Commission, Washington, D.C. 20555, Attention: Director, Division of Licensing.

Dated at Bethesda, Maryland, this 1st day of August 1980.

For the Nuclear Regulatory Commission.

Robert W. Reid,

Chief, Operating Reactors Branch No. 4, Division of Licensing.

[FR Doc. 80-24733 Filed 8-14-80; 8:45 am]

BILLING CODE 7590-01-M

[Docket No. 50-320 OLA]

Metropolitan Edison Co., et al. (Three Mile Island Nuclear Station, Unit 2)

Modification of Order

I

Metropolitan Edison Company, Jersey Central Power and Light Company and Pennsylvania Electric Company (collectively, the Licensee) are the holders of Facility Operating License No. DPR-73, which had authorized operation of the Three Mile Island Nuclear Station, Unit 2 (TMI-2) at power levels up to 2772 megawatts thermal. The facility, which is located in Londonderry Township, Dauphin County, Pennsylvania, is a pressured water reactor previously used for the commercial generation of electricity.

By Order for Modification of License, dated July 20, 1979, the Licensee's authority to operate the facility was suspended and the Licensee's authority was limited to maintenance of the facility in the present shutdown cooling mode (44 FR 45271). By further Order of the Director, Office of Nuclear Reactor Regulation, dated February 11, 1980, a new set of formal license requirements were imposed to reflect the post-accident condition of the facility and to assure the continued maintenance of the current safe, stable, long-term cooling condition of the facility (45 FR 11282). These requirements, in the form of proposed Technical Specifications, would modify the facility operating license so as to:

(1) define operating parameters for the current safe, stable, long-term cooling mode for the facility (defined as the recovery mode), and delete all other permissible operating modes so as to assure that operation of the facility in other than the stable shutdown condition of the recovery mode is precluded;

(2) impose functional, operability, redundancy and surveillance requirements as well as safety limits and limiting conditions with regard to those structures, systems, equipment and components necessary to maintain the facility in the current safe, stable shutdown condition and to cope with foreseeable off-normal conditions;

(3) prohibit venting or purging or other treatment of [the approximately 57,000 curies of krypton-85 in] the reactor building atmosphere, the discharge of water decontaminated by EPICOR-II system, and the treatment and disposal of high-level radioactively contaminated water in the reactor building, until each of these activities has been approved by the NRC,[1] consistent with the Commission's Statement of Policy and Notice of Intent to Prepare a Programmatic Environmental Impact Statement (44 FR 67738).

On the basis of the public health, safety, and interest, the requirements of the proposed Technical Specifications, attached to the February 11, 1980 Order, were made effective immediately. Under the terms of the Order, the proposed formal license amendment incorporating these proposed Technical Specifications will become effective on the expiration of the period specified in the Order, during which the Licensee or any other

[1] By Memorandum and Order, dated June 12, 1980, the Commission gave the approval contemplated by this restriction insofar as necessary for the Licensee to conduct a purging of the TMI-2 containment in accordance with procedures approved by the NRC. CLI-80-25. This activity was completed on July 11, 1980.

person whose interest may be affected may request a hearing or, in the event a hearing is requested and granted, on the date specified in an order made following the hearing or other disposition of such proceeding.

Several requests for a hearing have been filed in connection with the Order. These requests are pending before an Atomic Safety and Licensing Board established to rule on such requests and to preside over the proceeding in the event that a hearing is ordered. It is expected that, during the pendency of this matter, a number of changes in the proposed Technical Specifications may become necessary as the plant status continues to evolve as a result of ongoing decontamination and maintenance efforts. This Modification of Order addresses the first such change as discussed below.

II

Following the March 28, 1979 accident at TMI-2, it became apparent that the preferred cooling modes for the reactor included the use of a significant amount of plant equipment (e.g. condensate booster pumps and circulating water pumps) that did not have access to back-up power supplies. This was also true for the plant modifications proposed to provide alternate methods of core cooling. Therefore, in order to provide back-up power capability to these core cooling systems, two additional balance-of-plant (BOP) diesel generators and a separate external 13.2 kv transmission line were installed at the site. These provided sources of power in addition to the 230 kv lines and the onsite emergency diesels which were available before the March 28, 1979 accident. Operability requirements for these additional BOP diesel generators and the 13.2 kv transmission line were included in paragraph 3.8.1.1 of the proposed Technical Specifications which were imposed pursuant to the Director's Order of February 11, 1980.

By letter, dated April 28, 1980, the Licensee requested NRC approval of proposed design changes which would allow the removal of the two BOP diesel generators and the 13.2 kv transmission line. The proposed changes would utilize the same combustion turbines, located in the proximity of Three Mile Island, that now provide the back-up power source via the 13.2 kv line. Under this proposal, the 230 kv grid system would be utilized instead of the 13.2 kv line (via the 115 kv grid system). This new configuration means re-energizing a portion of the 230 kv grid system (that which normally feeds offsite power to TMI) by use of the combustion turbines. This eliminates the need to switch to other sources and can be accomplished well before any need for restoration of motive power would exist. The onsite emergency diesels, which could, if necessary, provide an adequate source of power, will continue to be available.

It has been determined that the Licensee's proposal would provide an overall upgrade in loss-of-offsite-power protection as compared to that afforded by the approved existing system. This upgrade is realized in the following ways: (1) unlimited versus limited capacity; (2) operator action consists of coordination with system dispatcher only versus also dispatching operators to man the BOP diesels; (3) proven reliability of the 230 kv grid and its components versus the unproven non-Class 1E diesel generators; and (4) familiarity with existing equipment versus new equipment never tested/operated in the actual mode required given loss of offsite power. (This is due to the fact that no testing is allowed which could even possibly provide a perturbation in the core cooling function.) As a consequence, the immediate need for the two BOP diesel generators and the 13.2 kv transmission lines found present in the Director's February 11, 1980 Order has been eliminated. The Staff's safety assessment of this matter is set forth in the concurrently issued Safety Evaluation. This evaluation concluded, in material part, that the modification does not involve a significant hazards consideration and that there is reasonable assurance that the health and safety of the public will not be endangered by operation in the modified manner.

It was further determined that the modification does not authorize a change in effluent types or total amounts nor an increase in power level and will not result in any significant environmental impact. In light of this determination, it was concluded that the instant action is insignificant from the standpoint of environmental impact and, pursuant to 10 C.F.R. § 51.5(d)(4), that an environmental impact statement or environmental impact appraisal need not be prepared herewith.

III

Accordingly, pursuant to the Atomic Energy Act of 1954, as amended, it is ordered that:

(1) Effectively immediately, the requirements imposed by the Director's Order of February 11, 1980 are modified by revision of paragraph 3.8.1.1 of the proposed Technical Specifications attached thereto to delete subparts (c) and (d) and to make corresponding revisions in explanatory portions of that paragraph as set forth in Attachment A hereto.

The formal license amendment incorporating the proposed Technical Specifications, as modified, must await the outcome of the prospective hearing requested pursuant to the February 11, 1980 Order or other disposition of that matter. For further details with respect to this action, see (1) Letter to B. J. Snyder, NRC, from R. C. Arnold, Met. Ed/GPU, "Technical Specification Change Request No. 22," dated April 28, 1980; (2) Letter to J. T. Collins, NRC, from R. F. Wilson, Met. Ed/GPU, requesting removal of the two BOP diesel generators, dated March 4, 1980; (3) Letter to R. C. Arnold, Met. Ed, from J. T. Collins, NRC, granting approval of the concept for removal of the BOP diesel generators, dated March 28, 1980; (4) Letter to J. L. Collins, NRC, from R. F. Wilson, Met. Ed/GPU, requesting removal of 13.2 kv power line, dated March 28, 1980; and (5) the Director's Order of February 11, 1980. All of the above documents are available for inspection at the Commission's Public Document Room, 1717 H. Street, N.W., Washington, D.C., and at the Commission's Local Public Document Rooms at the State Library of Pennsylvania, Government Publications Section, Education Building, Commonwealth and Walnut Street, Harrisburg, Pennsylvania 17126 and of the York College of Pennsylvania, County Club Road, York, Pennsylvania.

Dated at Bethesda, Maryland, August 11, 1980.

For the Nuclear Regulatory Commission.

Edson G. Case,

Deputy Director, Office of Nuclear Reactor Regulation.

[FR Doc. 80-24732 Filed 8-14-80; 8:45 am]

BILLING CODE 7590-01-M

OFFICE OF THE UNITED STATES TRADE REPRESENTATIVE

Trade Policy Staff Committee; Generalized System of Preferences (GSP) Subcommittee: Results of Reviews of Petitions Requesting Changes in the List of Articles Eligible for Duty-Free Treatment Under the GSP

This publication describes results of the 1979 annual review of petitions requesting changes in the list of imported articles eligible for duty-free treatment under the U.S. Generalized System of Preferences (GSP). The GSP is provided for in the Trade Act of 1974 (88 Stat. 2066-2071, 19 U.S.C. 2461-2465). The review was conducted pursuant to regulations codified at 15 CFR Part 2007.

Results of the review were implemented as of March 30, 1980, by Executive Order No. 12204 of March 27, 1980 (45 FR 20740). The disposition of the petitions accepted for review by the GSP Subcommittee of the Trade Policy Staff Committee (TPSC) is set forth in Annex I of this notice. Petitions that remain pending are listed in Annex II.

Ann Hughes,

Chairman, Trade Policy Staff Committee.

BILLING CODE 3190-01-M

Annex 1

Case Reviews Completed

Case No.	TSUS or TSUSA 1/ item No.	Article	Petitioner	Action taken
		A. Petitions to add products to the list of eligible articles for the Generalized System of Preferences		
78-7	137.79	Jicamas	Government of Colombia	Petition Granted
78-7	137.81	Yams	Government of Colombia	Petition Granted
78-8	138.35	Frozen yucca	Government of Costa Rica	Petition Granted
78-9	140.45	Split peas	Deco-Swiss Dehydration Co., Ltd., Israel	MFN Duty-free treatment granted 1/1/80
78-14	148.65	Papaya, prepared or preserved	Government of Panama, Government of Peru	Petition Granted
78-16	168.42	Slivovitz, not over 1 gal., not over $9 per gallon	Government of Yugoslavia	Petition Granted
78-17	168.54	Slivovitz, not over 1 gal., over $9 but not over $13 per gal.	Government of Yugoslavia	Petition Granted
78-17	168.57	Slivovitz, not over 1 gal., over $13 per gal.	Government of Yugoslavia	Petition Granted
78-18	168.59	Slivovitz, over 1 gal., not over $9 per gal.	Government of Yugoslavia	Petition Granted
78-18	168.61	Slivovitz, over 1 gallon, over $9 per gal.	Government of Yugoslavia	Petition Granted
78-19	169.58	Imitations of brandy and other spirituous beverages, not over 1 gal.	Government of Yugoslavia	Petition Granted
78-19	169.59	Imitations of brandy and other spirituous beverages, over 1 gal.	Government of Yugoslavia	Petition Granted
78-20	176.17	Coconut oil	Trust Territory of the Pacific Islands, Government of Malaysia	Petition Granted
78-21	176.29	Olive oil in containers weighing under 40 lb.	Government of Argentina, Government of Turkey	Petition Granted

1/ Tariff Schedules of the United States Annotated (19 U.S.C. 1202).

Annex I (Continued)

Case Review Completed (Continued)

Case No.	TSUS or TSUSA 1/ item No.	Article	Petitioner	Action taken
	A. Petitions to add products to the list of eligible articles for the Generalized System of Preferences (con.)			
78-22	183.05	Other edible preparations, nspf, including bioprotein of fish origin for human use	Government of Uruguay	Petition Granted
78-23	184.7540 or 184.7540 pt.	Other animal feeds or Hydrolized fish protein for livestock	Government of Uruguay	Petition Denied
78-24	192.17	Miniature (spray) carnations	Dominican Republic Center for Export Promotion, Dominican Republic, Government of Panama, Government of Singapore	Petition Granted
78-24	192.21	Other fresh cut flowers, excluding roses	Dominican Republic Center for Export Promotion, Dominican Republic, Government of Panama, Government of Singapore	Petition Granted
78-29	315.25	Unstranded cordage of vegetable fibers	Exporcorda-Exportadora de Cordoarias, Lda., Portugal	Petition Granted
78-30	315.30	Cordage of vegetable fibers, under 3/16 inch in diameter	Exporcorda-Exportadora de Cordoarias, Lda., Portugal	Petition Granted
78-31	315.40	Cordage of vegetable fibers, over 3/16 but under 3/4 inch in diameter	Exporcorda-Exportadora de Cordoarias, Lda., Portugal	Petition Denied
78-32	315.55	Cordage of vegetable fibers, 3/4 inch or over in diameter	Exporcorda-Exportadora de Cordoarias, Lda., Portugal	Petition Granted

1/ Tariff Schedules of the United States Annotated (19 U.S.C. 1202).

Annex 1 (Continued)

Case Review Completed Continued

Case No.	TSUS or TSUSA 1/ item No.	Article	Petitioner	Action taken
		A. Petitions to add products to the list of eligible articles for the Generalized System of Preferences (con.)		
78-36	337.72	Certain silk-blended fabrics, not jacquard-figured	Government of India	Petition Granted
78-38	356.25	Coated fabrics of vegetable fibers	Floctex Industries, Ltd., Israel	Petition Granted
78-39	356.40	Coated fabrics of man-made fibers	Floctex Industries, Ltd., Israel	Petition Granted
78-43	363.02	Sheets and pillowcases of vegetable fibers other than cotton	Government of Colombia, Government of Lesotho	Petition Granted
78-63	365.15	Handmade lace furnishings over $50 per pound	Government of Lesotho	Petition Granted
78-64	365.25	Machine-made lace furnishings made on a Leavers machine, 12 points or finer	Government of Lesotho	Petition Granted
78-65	365.29	Machine-made lace furnishings made on a Leavers machine, not 12 points or finer	Government of Lesotho	Petition Granted
78-71	365.72	Burnt-out lace furnishings, other than of man-made fibers	Government of Lesotho	Petition Granted
78-72	365.76	Hand-joined lace	Government of Lesotho	Petition Granted
78-91	372.60	Silk mufflers, not knit, valued over $5 per dozen	Government of India	Petition Granted
78-92	372.65	Other silk mufflers	Government of India	Petition Granted
78-93	373.22	Men's and boys' silk neckties	Government of India	Petition Denied
78-97	382.72 pt. 2/	Other womens', girls', or infants' silk wearing apparel	Government of India	Petition Denied
78-110	522.21	Acid-grade fluorspar	Fluorspar Co. of Kenya, Ltd., Kenya	Petition Granted

1/ Tariff Schedules of the United States Annotated (19 U.S.C. 1202).

2/ TSUSA items 382.7264 through 382.7282.

Annex I (Continued)

Case Review Completed Continued

Case No.	TSUS or TSUSA 1/ item No.	Article	Petitioner	Action taken
		A. Petitions to add products to the list of eligible articles for the Generalized System of Preferences (con.)		
78-119	670.58	Latch needles	Government of Brazil	Petition Granted
78-141	705.82	Seamless rubber or plastic surgical and medical gloves	The Ansell Corp., Wilmington, De., Government of Malaysia	Petition Granted
79-1	107.30	Pork, prepared or preserved, not boned and cooked and packed in airtight containers	Government of Romania	Petition Denied
79-2	107.35	Pork, prepared or preserved, boned and cooked and packed in airtight containers	Government of Romania	Petition Denied
79-3	121.30	Calf and kip upper leather	Government of Argentina	Petition Granted
79-4	121.62	Goat and kid leather, other than fancy	Florsheim Shoe Co., Chicago, Il.	Petition Granted
79-5	121.60	Goat and kid leather, fancy	Florsheim Shoe Co., Chicago, Il., Government of India	Petition Denied
79-7	138.50 or 138.5060 pt.	Other vegetables or Frozen artichoke hearts	Government of Chile	Petition Denied
79-9	144.10	Fresh mushrooms	Industrias Internacionales de Alimentos, S.A., Dominican Republic	Petition Denied
79-12	147.98	Fresh mangoes, entered Nov. 1 to April 30	Lincoln Diversified Systems, Inc., Chicago, Il.	Petition Granted
79-23	206.65	Wood blinds	Miramar Corporation, Ltd., Taipei, Taiwan	Petition Granted
79-35	386.5040	Cotton sleeping bags	Noam-Urim, Israel	Petition Denied
79-37	407.8518 or 407.8518 pt.	Other anti-infective agents or Amoxicillin trihydrate	Plantex/Ikapharm, Ltd., Israel	Petition Denied

1/ Tariff Schedules of the United States Annotated (19 U.S.C. 1202).

Annex I (Continued)

Case Review Completed Continued

Case No.	TSUS or TSUSA 1/ item No.	Article	Petitioner	Action taken
	A. Petitions to add products to the list of eligible articles for the Generalized System of Preferences (con.)			
79-38	407.8555 or 407.8555 pt.	Antidepressants, tranquilizers, and other psychotherapeutic agents or Amitriptyline	Plantex/Ikapharm, Ltd., Israel	Petition Denied
79-40	432.15	Certain pesticides	Makhteshim Chemical Works, Ltd., Israel	Petition Granted
79-41	532.22	Other mosaic tiles	Government of Colombia, Guatemala Export Promotion Center, Government of Malaysia, Stylex, S.A., Honduras	Petition Granted on part of TSUS no.
79-42	532.24	Glazed mosaic tiles	Guatemala Export Promotion Center, Government of Mexico, Government of Malaysia	Petition Denied
79-43	532.27	Other mosaic tiles	Government of Colombia, Guatemala Export Promotion Center	Petition Denied
79-45	533.66	Non-bone or subporcelain chinaware	Government of Romania	Petition Denied
79-46	542.31	Glass weighing over 16 oz. but not over 28 oz. per sq. ft. measuring not over 40 united inches	Government of the Philippines, Government of Romania	Petition Denied
79-47	542.33	Glass weighing over 16 oz. but not over 28 oz. per sq. ft. measuring over 40 but not over 60 united inches	Government of the Philippines, Government of Romania	Petition Denied
79-48	542.35	Glass weighing over 16 oz. but not over 28 oz. per sq. ft. measuring over 60 but not over 100 united inches	Government of the Philippines, Government of Romania	Petition Denied
79-49	542.37	Glass weighing over 16 oz. but not over 28 oz. per sq. ft., measuring over 100 united inches	Government of Romania	Petition Denied

1/ Tariff Schedules of the United States Annotated (19 U.S.C. 1202).

Annex I (Continued)

Case Review Completed Continued

Case No.	TSUS or TSUSA 1/ item No.	Article	Petitioner	Action taken
		A. Petitions to add products to the list of eligible articles for the Generalized System of Preferences (con.)		
79-50	542.42	Glass weighing over 28 oz. per sq. ft., not over 2-2/3 sq. ft. in area	Government of Romania	Petition Denied
79-51	542.44	Glass weighing over 28 oz. per sq. ft., over 2-2/3 but not over 7 sq. ft. in area	Government of Romania	Petition Denied
79-52	542.46	Glass weighing over 28 oz. per sq. ft., over 7 but not over 15 sq. ft. in area	Government of Romania	Petition Denied
79-53	542.48	Glass weighing over 28 oz. per sq. ft., over 15 sq. ft. in area	Government of Romania	Petition Denied
79-54	544.31	Tempered glass	Government of the Philippines	Petition Granted
79-55	546.52	Other glassware valued not over $0.30 each	Allen Lewis Manufacturing Co., Inc., Denver, Co.	Petition Denied
79-56	546.54	Other glassware valued over $0.30 but not over $1.00 each	Allen Lewis Manufacturing Co., Inc., Denver, Co.	Petition Denied
79-61	646.25	Brads, or nails of iron or steel under 1 inch in length and under 0.065 inches in diameter	Government of India	Petition Denied
79-62	646.92	Other locks and padlocks	Government of Colombia, Government of Mexico	Petition Granted
79-63	650.01	Knives without their handles	Government of Colombia	Petition Granted
79-64	650.17	Knives with rubber or plastic handles	Government of Brazil	Petition Granted
79-65	650.92	Other scissors and shears valued over $1.75 per dozen	Government of India	Petition Denied
79-66	650,90	Pinking shears valued over $30 per dozen	Marks International Inc., Newton, Ma.	Petition Granted

1/ Tariff Schedules of the United States Annotated (19 U.S.C. 1202).

Annex I (Continued)

Case Review Completed Continued

Case No.	TSUS or TSUSA 1/ item No.	Article	Petitioner	Action taken
		A. Petitions to add products to the list of eligible articles for the Generalized System of Preferences (con.)		
79-67	662.30	Other weighing machinery and scales	Government of Argentina, Government of Mexico	Petition Granted
79-68	680.92	Gray-iron awning or tackle pulleys, not over 2½ inches in diameter	Newborn Brothers & Company, Inc. Columbia, Md.	Petition Granted
79-69	685.21pt.	Solid-state (tubeless) radio receivers for motor-vehicles	Government of Korea	Petition Denied
79-71	715.33	Other clocks valued over $10 each	Government of Korea	Petition Denied
79-72	725.01	Upright pianos, except grand pianos	Government of Korea	Petition Granted
79-73	727.12	Furniture of unspun vegetable fibers, excluding rattan	Guatemala Export Promotion Center, Government of Mexico, Government of Nicaragua, Government of Thailand, Government of Yugoslavia, Interplet, Zagreb, Yugoslavia	Petition Granted on part of TSUS no.
79-74	745.70	Slide fasteners not over 4 cents each	Government of Brazil	Petition Granted
79-75	745.72	Slide fasteners over 4 cents each	Government of Brazil	Petition Denied
79-76	745.74	Slide fastener parts	Government of Brazil	Petition Denied
79-77	760.15	Felt-tip and similar tip marking pens	Drafton, Ltd., Israel	Petition Granted

1/ Tariff Schedules of the United States Annotated (19 U.S.C. 1202).

Annex I (Continued)

Case Review Completed Continued

Case No.	TSUS or TSUSA 1/ item No.	Article	Petitioner	Action taken
		B. Petitions to remove products from the list of eligible articles for the Generalized System of Preferences		
78-165	731.20	Fishing reels, valued not over $2.70 each	American Fishing Tackle Manufacturers Association, Chicago, Il., Tackle Representative Association, Chicago, Il.	Petition Denied
78-166	731.22	Fishing reels, valued over $2.70 but not over $8.45 each	American Fishing Tackle Manufacturers Chicago, Il., Tackle Representative Association, Chicago, Il.	Petition Granted
79-78	642.1630	Steel wire rope	Committee of Domestic Steel Wire Rope and Specialty Cable Manufacturers, Washington, D.C.	Petition Denied
79-79	708.47	Eyeglass frames and mountings	Optical Manufacturers Association, Arlington, Va.	Petition Denied
79-80	737.9535 or 737.9535 pt.	Inflatable toys or Toy balloons	Association of American Toy Balloon Manufacturers, Washington, D.C.	Petition Denied
79-81	771.4212	Film, strips and sheets of polyvinyl chloride	Plastics Import Action Committee, New York, N.Y.	Petition Denied

1/ Tariff Schedules of the United States Annotated (19 U.S.C. 1202).

Annex 1 (Continued)

Case Review Completed Continued

Case No.	TSUS or TSUSA 1/ item No.	Article	Petitioner	Action taken
		C. Petitions to subdivide TSUS items currently designated as eligible articles for the Generalized System of Preferences		
79-82	121.55 pt.	Water buffalo leather, not fancy	Florsheim Shoe Company, Chicago, Il., Import Leather, Inc., Exeter, N.H.	Petition Denied
79-83	145.65	Litchi or longan nuts	East Impex San Francisco, Ca.	Petition Granted
79-84	682.60 pt.	Other coils and inductors	General Electric Company, Bridgeport, Ct.	Petition Denied
79-84	682.60 pt.	Other coils and inductors for motors and generators	Coilcraft, Gary, Il.	Petition Denied
79-85	688.44	Electrical articles using pre-programmed digital integrated circuits to produce sound	Calfax, Inc., New York, N.Y.	Petition Granted
79-86	735.20 pt.	Racquetball rackets	Wilson Sporting Goods Co., River Grove, Il.	Petition Withdrawn
79-87	740.11	Rope-style necklaces and neck chains almost wholly of gold	Israel Export Institute, Israel	Petition Granted to be effective 3/31/81
79-87	740.12	Mixed link-style necklaces and neck chains, almost wholly of gold	Israel Export Institute, Israel	Petition Granted to be effective 3/31/81
79-87	740.13	Other necklaces and neck chains, almost wholly of gold	Israel Export Institute, Israel	Petition Granted to be effective 3/31/81
79-87	740.14	Other jewelry of precious metals, other than necklaces and neck chains	Israel Export Institute, Israel	Petition Granted to be effective 3/31/81
79-87	740.15	Other jewelry, other than chief value of precious metals	Israel Export Institute, Israel	Petition Granted to be effective 3/31/81
79-88	741.50 pt.	Plastic beaded curtains	Alanco Industries, Inc., New York, N.Y.	Petition Denied

1/ Tariff Schedules of the United States Annotated (19 U.S.C. 1202).

Annex II

Case Reviews Pending

Case No.	TSUS or TSUSA 1/ item No.	Article	Petitioner
78-24	192.18	Roses	Dominican Republic Center for Export Promotion, Dominican Republic, Government of Panama
78-122	687.58	Other electronic tubes	Government of Argentina
78-123	687.5825	Transistors, with a dissipation rating of less than 1 watt	Government of Malaysia, Government of Singapore
78-124	687.5827	Transistors, with a dissipation rating of 1 watt or greater	Government of Malaysia, Government of Singapore
78-125	687.5831	Integrated circuits, monolithic linear	Government of Malaysia
78-126	687.5836	Integrated circuits, bipolar, transistor-transistor logic	Government of Malaysia
78-127	687.5837	Integrated circuits, bipolar, emitter-coupled logic	Government of Malaysia
78-128	687.5839	Integrated circuits, bipolar, other	Government of Malaysia
78-129	687.5843	Other integrated circuits of metal oxide silicon	Government of Malaysia
78-130	687.5846	Other integrated circuits, other than of metal oxide silicon	Government of Malaysia
78-131	687.5853	Integrated circuits, other than monolithic	Government of Malaysia
78-132	687.5854	Photo-sensitive diodes and rectifiers, solar cells	Government of Malaysia
78-132	687.5856	Photo-sensitive diodes and rectifiers, other	Government of Malaysia
78-133	687.5859	Zener diodes and rectifiers	Government of Malaysia
78-134	687.5861	Microwave diodes and rectifiers	Government of Malaysia
78-135	687.5862	Diodes and rectifiers, thyristors	Government of Malaysia
78-136	687.5866	Diodes and rectifiers, with a maximum current of .500 amperes or less	Government of Malaysia
78-137	687.5867	Diodes and rectifiers, other	Government of Malaysia
78-138	687.5868	Mounted piezo-electric crystals	Government of Singapore
78-139	687.5886	Other, including parts not specifically provided for, or electronic tube mounts	Government of Singapore

1/ Tariff Schedules of the United States Annotated (19 U.S.C. 1202).

Annex II

Case Reviews Pending

(Continued)

Case No.	TSUS or TSUSA 1/ item No.	Article	Petitioner
79-6	130.45	Oats, hulled or not hulled	Government of Colombia
79-8	141.8860	Other vegetables, including tender cactus	Herdez USA Corp., Vernon, California
79-10	146.7550	Berries, prepared or preserved, including frozen blackberries	Government of Chile
79-11	147.77	Grape must	Government of Argentina
79-13	148.44	Green olives, packed in airtight containers	Hazayith of Israel
79-14	148.50	Olives, pitted or stuffed	Hazayith of Israel
79-15	148.56	Olives, otherwise prepared or preserved	Hazayith of Israel
79-16	148.60	Fresh papaya	Government of Panama
79-17	170.10	Cigar wrapper tobacco, not stemmed	Government of Nicaragua, Cigar Association of America, Inc., Washington, D.C.
79-18	170.15	Cigar wrapper tobacco, stemmed	Cigar Association of America, Inc., Washington, D.C.
79-19	170.64	Bidis (Indian-style cigarettes)	Government of India
79-20	170.66	Cigars and cheroots, valued over 15 cents each	Government of Mexico, Government of Nicaragua
79-21	175.36	Poppy seed	Government of Romania
79-22	141.8860	Other vegetables, including pre-cooked rice	Government of Colombia
79-24	307.68	Yarns of wool or hair, handspun and hand-dyed	Manos del Uruguay, Montevideo, Uruguay
79-25	315.80	Jute cordage, not bleached, colored or treated, with singles yarn under 720 yards per pound	Government of India, Government of Bangladesh
79-26	315.85	Jute cordage, not bleached, colored or treated, with singles yarn 720 yards or over per pound	Government of Bangladesh
79-27	315.90	Jute cordage, bleached, colored or treated, with singles yarn under 720 yards per pound	Government of Bangladesh, Government of India
79-28	315.95	Jute cordage, bleached, colored or treated, with singles yarn 720 yards or over per pound	Government of Bangladesh
79-29	337.40	Silk fabric, jacquard-figured, degummed, bleached, or colored	Government of Thailand

1/ Tariff Schedules of the United States Annotated (19 U.S.C. 1202).

Annex II

Case Reviews Pending
(Continued)

Case No.	TSUS or TSUSA 1/ item No.	Article	Petitioner
79-30	355.81	Vinyl-coated fabrics	Government of Korea
79-31	360.15	Floor coverings, hand-inserted pile, valued over 66-2/3 cents per square foot	Pande Cameron & Company, N.Y., N.Y., Government of Bangladesh, Government of India, Government of Turkey, Manos del Uruguay, Montevideo, Uruguay
79-32	361.44	Wool floor coverings woven, not made on a power-driven loom, valued over 30 cents per square foot	Manos del Uruguay, Montevideo, Uruguay
79-33	364.22	Hand-woven mohair tapestries	Government of Lesotho
79-34	385.45	Bags and sacks of vegetable fibers, except cotton, not bleached, or colored	Government of Bangladesh
79-36	389.6260	Nylon sleeping bags	Noam-Urim, Israel
79-39	427.88	Ethyl alcohol for non-beverage use	Government of Argentina
79-44	533.22	Fine-grained earthenware over $12 per set	Government of Romania
79-57	610.3265	Spiral-welded steel pipe, over 16 inches in outside diameter	Grand Bahama Steel & Pipe Company, Ltd., Freeport, Bahamas
79-58	618.02	Unwrought aluminum, other than alloys	Government of Romania
79-59	618.06	Other aluminum alloys	Government of Romania
79-60	624.0330	Unwrought lead, alloyed	Government of Mexico

[FR Doc. 80-24752 Filed 8-14-80; 8:45 am]
BILLING CODE 3190-01-C

SECURITIES AND EXCHANGE COMMISSION

[File No. 500-1]

Panacolor, Inc.; Order of Suspension of Trading

July 14, 1980.

It appearing to the Securities and Exchange Commission that Panacolor, Inc. has failed to file with the Commission its Annual Report on Form 10-K for the year ending December 31, 1979 and its most recent Quarterly Report on Form 10-Q for the period ended March 31, 1980 and that, as a result, there is a lack of current adequate and accurate public information about the operations and financial condition of Panacolor, Inc., the Commission is of the opinion that the public interest and the protection of investors require a summary suspension of trading in the securities of Panacolor, Inc.

Therefore, it is ordered, pursuant to Section 12(k) of the Securities Exchange Act of 1934, that trading in such securities on a national securities exchange or otherwise is suspended, for the period from 11:30 a.m. on July 14, 1980 through July 23, 1980.

By the Commission.

Shirley E. Hollis,

Assistant Secretary.

[FR Doc. 80-24694 Filed 8-14-80; 8:45 am]

BILLING CODE 8010-01-M

[File No. LA-319]

Liberty Oil Corp.; Order of Suspension of Trading

August 4, 1980.

It appearing to the Securities and Exchange Commission that there is insufficient information currently available to the public regarding the amount of common stock outstanding and the identity of the controlling shareholders of Liberty Oil Corporation, the Commission is of the opinion that the public interest and the protection of investors require a summary suspension of trading in the securities of Liberty Oil Corporation.

Therefore, it is ordered, pursuant to Section 12(k) of the Securities Exchange Act of 1934, that trading in such securities on a national securities exchange or otherwise is suspended, for the period from 9:45 a.m. on August 4, 1980 through August 13, 1980.

By the Commission.

Shirley E. Hollis,

Assistant Secretary.

[FR Doc. 80-24751 Filed 8-14-80; 8:45 am]

BILLING CODE 8010-01-M

SMALL BUSINESS ADMINISTRATION

[Proposal No. 05/05-0147]

Bando-McGlocklin Investment Co., Inc.; Application for a License as a Small Business Investment Company

Notice is hereby given of the filing of an application with the Small Business Administration pursuant to § 107.102 of the SBA Regulations (13 CFR 107.102(1980)), by Bando-McGlocklin Investment Co., Inc., 13555 Bishops Court, Brookfield, Wisconsin 53055 for a license to operate as a small business investment company (SBIC) under the provisions of the Small Business Investment Act of 1958 (the Act), as amended (15 U.S.C. 661 *et seq.*).

The proposed officers, directors and shareholders are:

Name, Title, and Percent of Ownership

Richard Van Eerden, director—8.33 [1]

Salvatore Bando, president, treasurer, and director—8.33 [1]

Jon McGlocklin, executive vice president, secretary, and director—8.33 [1]

George Schonath [2], investment adviser——

Bando-McGlocklin Enterprises, Inc.—25

The Applicant proposes to begin operations with a capitalization of approximately $1,150,000 to primarily make loans to manufacturers and wholesalers secured by a first mortgage on real estate not to exceed eighty percent (80%) of the value of the real estate. The purpose of the loan shall be to finance the acquisition or expansion of real estate and to refinance existing real estate which will create funds to be used for working capital. The Applicant may render management consulting services to small business concerns.

Bando-McGlocklin Enterprises, Inc., owns more than ten percent (10%) of the shares of the Applicant. The stockholders and the percentage each owns is as follows:

Stockholder, Address, and Percentage of Stock Owned

Jon McGlocklin, 13555 Bishops Court, Brookfield, WI 53005—33⅓

Salvatore Bando, 13555 Bishops Court, Brookfield, WI 53005—33⅓

Van Eerden & Associates, Inc., 13555 Bishops Court, Brookfield, WI 53005—33⅓

Matters involved in SBA's consideration of the application include the general business reputation and character of the proposed owners and management, and the probability of successful operations of the new company under their management, including adequate profitability and financial soundness, in accordance with the Act and Regulations.

Notice is further given that any person may, not later than August 29, 1980, submit written comments on the proposed SBIC to the Associate Administrator for Investment, Small Business Administration, 1441 "L" Street, N.W., Washington, D.C. 20416.

A copy of this Notice will be published in a newspaper of general circulation in Milwaukee, Wisconsin.

(Catalog of Federal Domestic Assistance Program No. 59.011, Small Business Investment Companies)

Dated: August 5, 1980.

Michael K. Casey,

Associate Administrator for Investment.

[FR Doc. 80-24622 Filed 8-14-80; 8:45 am]

BILLING CODE 8025-01-M

[1] The shares stated as owned by Richard Van Eerden, Salvatore Bando and Jon McGlocklin are the shares of the Applicant owned by Bando-McGlocklin Enterprises, Inc. Salvatore Bando, Jon McGlocklin and Van Eerden & Associates, Inc., are the stockholders of Bando-McGlocklin and Van Eerden & Associates, Inc., are the stockholders of Bando-McGlocklin Enterprises, Inc. Richard Van Eerden is the sole stockholder of Van Eerden & Associates, Inc.

[2] George Schonath is a self-employed consultant doing business as Corporate Alternatives, a sole proprietorship.

Region IV Advisory Council; Public Meeting

The Small Business Administration Region IV Advisory Council, located in the geographical area of Charlotte, North Carolina, will hold a public meeting at 2:00 p.m., Wednesday, September 10, 1980 and 9:00 a.m., Thursday, September 11, 1980, at Bur-Mil Club, Owl Roost Road, off U.S. Highway 220 North, Greensboro, North Carolina, to discuss such business as may be presented by members, the staff of the U.S. Small Business Administration, and others attending.

For further information, write or call Larry D. Cherry, District Director, U.S. Small Business Administration, 230 Tryon Street, Suite 700, Charlotte, North Carolina 28202, (704) 371-6561.

Dated: August 11, 1980.

Michael B. Kraft,

Deputy Advocate for Advisory Councils.

[FR Doc. 80-24621 Filed 8-14-80; 8:45 am]

BILLING CODE 8025-01-M

TENNESSEE VALLEY AUTHORITY

Implementation of Procedures on the National Environmental Policy Act

AGENCY: Tennessee Valley Authority.

ACTION: Final procedures implementing the National Environmental Policy Act.

SUMMARY: On November 29, 1978, the Council on Environmental Quality (CEQ) promulgated uniform procedures for implementing the National Environmental Policy Act (NEPA), 42 U.S.C. 4321 *et seq.* (1976). 43 FR 55,978–56,007 (1978) (hereinafter all references to CEQ's procedures will be to the parts of the Code of Federal Regulations where they are codified). CEQ requested Federal agencies to adopt procedures implementing and supplementing its procedures. The Tennessee Valley Authority (TVA) has adopted the following amendments to its internal procedures in response to CEQ.

FOR FURTHER INFORMATION CONTACT: Mohamed T. El-Ashry, Ph.D., Director, Environmental Quality Staff, Tennessee Valley Authority, Norris, Tennessee 37828.

SUPPLEMENTARY INFORMATION: TVA has adopted the following amendments to its internal procedures implementing NEPA. TVA Code IX Environmental Quality. TVA's existing procedures were published on February 14, 1974, and appear at 39 FR 5671 (1974). These procedures, as amended, provide interagency guidance for compliance by TVA with NEPA. TVA published for comment on July 6, 1979, its proposed amendments (44 FR 36,679 (1979)). During the development of its proposed and final amendments, TVA consulted with CEQ in accordance with 40 CFR 1507.3(a)(1979) and CEQ had no objections to TVA's amendments.

Comments

TVA received 18 sets of comments on its proposed amendments. These comments fall within the following general categories:

1. Request to include state and regional A–95 clearinghouses in the NEPA review process.
2. The need to increase or decrease public involvement in TVA's NEPA review process.
3. Questions concerning the number and type of actions TVA proposed as categorical exclusions.
4. Objections to internally scoping an environmental impact statement (EIS) without public involvement.
5. Miscellaneous comments pertaining to the proposed format of the procedures.

Involvement of State and Regional A–95 Clearinghouses

Several A–95 clearinghouses requested more direct input into and involvement in TVA's NEPA review procedures. It has always been TVA's practice to coordinate closely with clearinghouses in its NEPA review process and the input received in the past has been valuable to TVA in its decisionmaking. It is TVA's intention to continue this practice and the amendments have been revised to expressly provide for this. Specifically, sections 5.3.4 (Finding of No Significant Impact), 5.4.5 (DEIS Transmittal and Review), 5.4.7 (FEIS Transmittal), and 5.7.2 (Private Applicants) have been revised to expressly include A–95 clearinghouses.

Public Involvement

Striking the appropriate balance between increased public involvement in the NEPA process and avoiding unnecessary delays is difficult. Both are objectives of CEQ's procedures. *See* 43 FR 55,978–90 (1978). TVA believes that public involvement in the NEPA process is essential. Therefore, the amendments have been revised to expressly state that TVA intends to encourage and actively seek public participation in its NEPA review process (§ 5.7.16).

With regard to public involvement in the preparation of EIS's, the adopted scoping process procedure (§ 5.4.3) will ensure that the public is given an opportunity to participate meaningfully in the assessment of major actions significantly affecting the quality of the human environment. TVA believes that public involvement at this early stage is essential in order to ensure that any divergent views regarding the environmental consequences of such actions are appropriately considered at the outset.

Some commenters stated that public involvement in the process of preparing environmental assessments would unduly complicate the NEPA process, increase paperwork, and generate delays. Nevertheless, TVA believes that public input may be beneficial in specific instances, and the final procedures reflect TVA's intention to seek public involvement in this process when it is appropriate (§§ 5.3.2, 5.3.4, 5.7.16).

The proposed amendments (§ 6.4.2) included a 15-day public comment period to allow public input into the scope of each environmental assessment prepared. Public reaction to this proposal was mixed. One commenter criticized it because it deviated from CEQ's procedures and he believed it would accomplish little. Another commenter pointed out that establishing a uniform 15-day comment period may not permit interested persons sufficient time to evaluate actions in all instances. In the interim since TVA proposed its amendments, it has gained experience in implementing this provision and concurs that flexibility is needed in this area. The final procedures have, therefore, been revised to state that the type of and format for public involvement would be selected as appropriate to best facilitate timely and meaningful public input into EA process (§ 5.3.2).

The final procedures also provide for public review of Findings of No Significant Impact in certain instances (§ 5.3.4). A public comment period of 30 days is provided, and all public comments received will be considered before a decision is made on whether or not to proceed with the proposed action.

Categorical Exclusions

In its efforts to reduce delay in the NEPA process, CEQ requested agencies to develop categories of actions which do not individually or cumulatively have a significant impact on the quality of the human environment and, therefore, require the preparation of neither and EIS nor an EA. 40 CFR 1507.3(b)(1979). TVA concurs with this approach which continues the format established in TVA's prior procedures (39 Fed. Reg. 5672 (1974)).

The categories listed in TVA's procedures, as amended, are those which TVA has determined will not normally have a significant impact on the environment (§ 5.2). This determination is premised upon TVA's experience in both assessing and implementing the listed categories in its prior procedures.

Several commenters objected to categorically excluding certain activities from the requirement to prepare an EA. Of these comments, most objected to the categorical exclusion of uranium exploration activities including hydrologic investigations. Beginning in 1972, TVA prepared detailed, individual environmental evaluation prior to undertaking uranium exploration activities in particular states. Those evaluations documents identified the procedures that would be followed and the precautions taken to ensure that the exploration activities would not result in significant environmental impacts. Ultimately, TVA prepared a generic environmental assessment for this class of actions which was completed on April 14, 1977.

This generic EA evaluated in detail the methods used in uranium exploration and the associated

environmental impacts. Included in this EA was a set of detailed guidelines for the protection of the environment. These guidelines form the basis for requirements and restrictions which are imposed on all exploration contractors to ensure that no significant environmental impacts result from exploration activities in which TVA is involved.

These restrictions require, among other things, reclamation and revegetation of disturbed land, the use of existing roads and trails when feasible, the reclamation of any new trails or roads in coordination with the appropriate local authorities or private landowners, and limitations on the disturbance of surface water sources. The document further prohibits exploration activities in certain specified areas such as National or state parks, wilderness areas, and state wildlife refuges.

The EA concluded that if exploration activities are carried out consistent with the guidelines and restrictions set forth in the EA, no significant environmental impacts would be expected to result. For these reasons, TVA has decided to retain uranium exploration as a categorical exclusion (§ 5.2.21). Of course, if there are unusual circumstances associated with exploration of a particular area, TVA would prepare an individual environmental assessment consistent with these procedures (§ 5.2).

The listed categories certainly do not reflect every type of action which would be appropriately treated as a categorical exclusion. Those listed reflected only the types of actions which, in TVA's experience in implementing NEPA, have been encountered frequently and which were determined to be appropriately treated as categorical exclusions. Other activities which are determined to normally have no associated significant environmental impacts will be treated as if categorically excluded and handled accordingly (§ 5.3.5).

TVA recognizes that a specific action within a category may, due to extraordinary circumstances, pose a greater risk of impact. In such a case, TVA would prepare an EA as provided in section 5.2. This is consistent with CEQ's regulations. 40 CFR 1508.4 (1979).

Scoping Process

In response to comments stating that public scoping of EIS's should be utilized to obtain input in the preparation of every EIS, section 5.4.3 of the procedures has been changed to state that the scoping process will normally consist of interagency scoping and public scoping. The reference to interagency or internal TVA scoping has been deleted. TVA agrees that public input into the evaluation of any actions which are the subject of an EIS would generally be beneficial and believes that the adopted scoping process strikes the correct balance to achieve the dual goals of appropriate public participation and efficient and effective Federal decisionmaking.

Miscellaneous Comments

One commenter criticized the proposed amendments because they had, to a large extent, paraphrased CEQ's procedures. It is TVA's intention that its procedures be in a form which provides clear and understandable direction to its various offices of what is required to properly evaluate proposed actions and to comply with NEPA. To the extent that the phraseology of CEQ's regulations, in certain instances, best accomplishes this, TVA has adopted CEQ's phraseology. Paraphrasing has been avoided to the extent possible in the final version of TVA's amendments.

Finally, one commenter pointed out that adopting a Limited Categorical Exclusion provision conflicted with CEQ's request that all agencies use similar terminology. 40 CFR 1508.1 (1979). TVA concurs and has deleted this provision in its final version of the amendments.

Tennessee Valley Authority's Procedures for Compliance With the National Environmental Policy Act

Table of Contents

Title

1. Purpose
2. Policy
3. Abbreviations
4. Definitions
5. Procedures
   5.1 Action Formulation and NEPA Determination
   5.2 Categorical Exclusions
   5.3 Environmental Assessments
   5.4 Environmental Impact Statement
   5.5 Mitigation Commitment Identification, Auditing, and Reporting
   5.6 Emergency Action
   5.7 Miscellaneous Procedures

Environmental Review Procedure

1. *Purpose.*—These procedures provide guidance for compliance by the Tennessee Valley Authority (TVA) with the National Environmental Policy Act, 42 U.S.C. 4321, et seq. (1976) (NEPA) and other applicable guidelines, regulations, and Executive Orders implementing NEPA. It is intended to incorporate the concepts and implement the policies in the regulations promulgated by the Council on Environmental Quality (CEQ) at 40 CFR Parts 1500–1508 (43 FR 55978–56007 [1978]).

2. *Policy.*—TVA, to the fullest extent possible, incorporates environmental considerations into its decision-making processes. In carrying out this policy, these procedures assure that actions are viewed in a manner to encourage productive and enjoyable harmony between man and the environment. Commencing at the earliest possible point, and continuing through implementation, appropriate and careful consideration of the environmental aspects of proposed actions is built into the decision-making process in order that adverse environmental effects may be avoided or minimized.

3. *Abbreviations:*

3.1 CEQ—The Council on Environmental Quality.

3.2 EA—Environmental Assessment.

3.3 EIS—Environmental Impact Statement—D-Draft; F-Final.

3.4 NEPA—National Environmental Policy Act.

3.5 TVA—The Tennessee Valley Authority.

4. *Definitions.*—Unless otherwise inconsistent with the context in which they appear or unless otherwise expressly defined, all terms herein shall be given the same meaning as set forth in CEQ's currently effective regulations (see CEQ Regs. part 1508).

5. *Procedures:*

5.1 *Action Formulation and NEPA Determination.*—Each office within TVA is responsible for integrating environmental considerations into its planning and decision-making process at the earliest possible time in order to ensure that potential environmental effects are appropriately considered to avoid potential delays and to minimize potential conflicts. Environmental analyses are to be included in or circulated with and reviewed at the same time as other planning documents. This responsibility is to be carried out in accordance with the environmental review procedures contained herein.

The General Manager and Board of Directors are the major decision points within the Agency for TVA's principal programs likely to have a significant effect on the quality of the human environment. The alternatives considered by the General Manager and the Board of Directors shall be encompassed by the range of alternatives discussed in relevant environmental documents and the General Manager and the Board of Directors shall consider the alternatives described in relevant EIS's.

At the earliest possible time the office proposing to initiate an action will initially propose the level of environmental review required for a specific action. An action will be in one of the following categories:

Procedure

Categorical Exclusion—5.2
Environmental Assessment—5.3
Environmental Impact Statement—5.4

5.2 *Categorical Exclusions.*—The categories of actions listed in this section are those which do not normally have, either individuall or cumulatively, a significant impact on the quality of the human environment and require neither the preparation of an EA nor an EIS. The office proposing to initiate an action shall determine in consultation with the

Environmental Quality Staff whether or not the proposed action is categorically excluded. An action which would normally qualify as a categorical exclusion shall not be so classified if: (1) the proposed action could have a potentially significant impact on an endangered species, wetland or floodplain, cultural or historical resource, or other environmentally significant resource; or (2) substantial controversy over the significance of the environmental impacts associated with the proposed action has developed.

Categorical exclusion actions are:

1. Routine operation, maintenance, and minor upgrading of existing TVA facilities.
2. Technical and planning assistance to State and local organizations.
3. Establishment of environmental quality monitoring programs and field monitoring stations.
4. Procurement activities.
5. Personnel actions.
6. Contracts for the sale, purchase, or interchange of electricity.
7. Accounting, auditoring, financial reports, and disbursement of funds.
8. Communication, transportation, computer service, and other office services.
9. Activities related to the promotion and maintenance of employee health.
10. Activities of TVA's Equal Employment Opportunity staff.
11. Preliminary planning, studies, or reviews consisting of only paperwork.
12. Minor research, development, and joint demonstration projects.
13. Visitor reception.
14. Property protection, law enforcement, and other legal activities.
15. Emergency preparedness.
16. Minor non-TVA activities on TVA property authorized under license, permit, and covenant agreements, including utility crossings, encroachments, agricultural uses, rental of structures, and sale of miscellaneous structures and meterials from TVA land.
17. Sale or abandonment of minor tracts of land or landrights.
18. Transmission line relocation, tap ins, or modifications or substation alterations due to conflicts such as new highway projects and projects requiring acquisition of small amounts of additional substation property or transmission line right of way easements.
19. Construction and operation of communication facilities (*i.e.*, powerline carrier, insulated overhead ground wire, VHF radio, and microwave).
20. Purchase and lease purchases of stepdown facilities by TVA directly served customers.
21. Exploration for uranium, including hydrologic investigations.
22. Backslope agreements involving properties on which TVA holds an interest between operators and other adjacent mining companies.
23. Permits under section 26a of the TVA Act for minor structures, boat docks, and shoreline facilities.
24. Administrative actions consisting solely of paperwork.
25. Development of minor TVA public use areas and stream access points.
26. Preliminary onsite engineering and environmental studies for future power generating plants and other energy-related facilities.
27. Actions which were the subject of an EA which concluded that the category of such actions should be treated as a categorical exclusion.

5.3 *Environmental Assessments:*

5.3.1. *Purpose and Scope.*—An EA will be prepared for any appropriate action not qualifying as a categorical exclusion. An EA is not necessary if it has been determined that an EIS will be prepared.

5.3.2. *Public Participation in EA Preparation.*—The initiating office, in consultation with the Environmental Quality Staff and other interested offices, may request public involvement in the preparation of the EA. The type of and format for public involvement would be selected as appropriate to best facilitate timely and meaningful public input into the EA process.

5.3.3. *EA Preparation.*—The initiating office is responsible for the preparation of the EA. The EA will include the identification and, as appropriate, discussion of questions and concerns raised during the public input period, if any. The EA will include brief discussions of the need for the proposed action, reasonable alternatives, the environmental impacts of the proposed action and alternatives, and a listing of the agencies and persons consulted. The EA will briefly provide sufficient data and analysis for determining whether to prepare as EIS or a Finding of No Significant Impact. The EA will be reviewed by the Environmental Quality Staff and other interested offices. After completion of the review, the Environmental Quality Staff will, in consultation with the Office of the General Counsel, make one of the following determinations: (1) the action does not require the preparation of an EIS, (2) the action will require the preparation of an EIS, or (3) the EA is incomplete or the decision will be deferred until a later stage in the planning process. Environmental mitigation measures committed to in the EA will be implemented as described in § 5.5 (Mitigation Commitment Identification, Auditing, and Reporting).

5.3.4. *Finding of No Significant Impact.*—If it is concluded, based on an EA, that a proposed action does not require the preparation of an EIS, the initiating office will prepare a Finding of No Significant Impact and transmit it to the Environmental Quality Staff for approval on the merits and the Office of General Counsel for legal sufficiency.

Appropriate notice of Findings of No Significant Impact shall be made available to the public.

In the following circumstances, the Environmental Quality Staff, in consultation with the Office of General Counsel and the initiating office, will make a Finding of No Significant Impact available for public review and comment (including, if appropriate, State and regional A-95 clearinghouses) for a period of time (normally 30 days) before a final determination is made as to whether or not to prepare an EIS and before the proposed action may begin:

1. The proposed action is, or is closely similar to, an action listed in § 5.4.1.
2. TVA has previously annonced that the proposed action would be the subject of an EIS.
3. The nature of the proposed action is one without precedent.

5.3.5. *Generic EAs.*—For any class of actions not described in § 5.2 (Categorical Exclusions), the initiating office may prepare a generic EA. The EA will be prepared, reviewed, and approved as would any other EA. Upon completion of review, the Environmental Quality Staff, in consultation with the Office of General Counsel, will determine whether or not the class of actions may normally be treated as if listed in 5.2 as a categorical exclusion.

5.4 *Environmental Impact Statements:*

5.4.1. *Purpose and Scope.*—The following actions normally will require an environmental impact statement:

1. Large water resource development and water control projects;
2. New nuclear-powered generating plants;
3. New coal-fired generating plants;
4. New pumped-storage plants;
5. Addition of new navigation locks;
6. Uranium mining and milling complexes;
7. Port facilities;
8. Any major action, the environmental impact of which is expected to be highly controversial; and
9. Any other major action which will have a significant effect on the quality of the human environment.

An EIS should include an analysis of the proposed action; alternatives thereto, including the no action alternative; and probable environmental impacts associated with the proposed action and the alternative actions. The scope and detail of the EIS should be reasonably related to the scope and the probable environmental impacts of the proposed action and alternative actions (*see* CEQ Regs. § 1502.10).

5.4.2. *Lead and Cooperating Agency Determinations.*—As soon as possible after the decision is made to prepare an EIS, the Environmental Quality Staff, in consultation with the initiating office and the Office of General Counsel, shall consider requesting other Federal, State, or local agencies to participate in the preparation of the EIS as lead, joint lead (*see* CEQ Regs. § 1501.5), or cooperating agencies (*see* CEQ Regs. § 1501.6). If TVA is requested to participate in the preparation of another Federal agency's EIS, TVA will consider whether and to what degree TVA should participate. All decisions involving TVA participation with another agency in preparation of an EIS will be made by the General Manager or a designee.

5.4.3. *Scoping Process.*—As soon as possible after the decision to prepare an EIS is made, the initiating office in consultation with the Environmental Quality Staff will organize a scoping committee to tentatively define action alternatives, probable environmental issues, and a schedule for EIS preparation. The scoping committee will consist of representatives of the Environmental Quality Staff, the initiating office, the Office of General Counsel, and other interested or affected offices.

The scoping process will normally consist of interagency scoping to coordinate action with and obtain inputs from other interested

agencies and public scoping to obtain input from interested members of the general public. The Environmental Quality Staff, in consultation with the scoping committee, will determine the need, nature, and format for the various scoping sessions. Session types and format will be selected to facilitate timely and meaningful public input into the EIS process.

As soon as practicable in the scoping process, the initiating office will prepare and the Environmental Quality Staff in consultation with the Office of General Council will review and make available a Notice of Intent to Prepare an EIS. This notice should briefly describe the action, alternatives thereto, and potential environmental impacts associated with the action. In addition, those issues which have tentatively been determined to be insignificant and which will not be discussed in detail in the EIS should be identified. If appropriate, the scoping process should be described and, if a scoping meeting will be held, where and when the meeting is to occur. The notice should identify the person in TVA who can supply additional information about the actions and to whom comments should be sent. There will normally be a public input period of 30 days from the date of publication of the Notice of Intent in the Federal Register to allow other interested agencies and the public an opportunity to review the action alternatives and probable environmental issues identified by the scoping committee. On the basis of input received, the Environmental Quality Staff in consultation with the scoping committee, may determine what, if any, additions or modification in the scoping process or schedule are required and establish the scope of the EIS.

At the close of the scoping process, the Environmental Quality Staff, in consultation with the scoping committee, will identify the following EIS components: (1) key action alternatives; (2) significant environmental issues to be addressed in detail; (3) probable nonsignificant environmental issues that should be mentioned but not addressed in detail; (4) lead and cooperating agency assignments, if any; (5) related environmental documents; and (6) other environmental review and consultation requirements.

5.4.4. *DEIS Preparation.*—Based on information obtained and decisions made during the scoping process, the initiating office, in consultation with the Environmental Quality Staff and other interested offices, will prepare the Preliminary DEIS using an appropriate format (see CEQ Regs. § 1502.10). The Preliminary DEIS will be circulated by the initiating office to the Environmental Quality Staff, Office of General Counsel, and other interested offices for review and comment. All reviewing offices will, as soon as practicable, and normally within 30 days, supply comments concerning the Preliminary DEIS to the initiating office, the Environmental Quality Staff and the Office of General Counsel. These comments will include lists of agencies, A-95 contacts, groups and individuals (both proponents and opponents, if any, of the proposed action) who should receive a copy of the DEIS. After the preliminary DEIS is revised, the initiating office will transmit it to other interested offices for their final approval. The Environmental Quality Staff will, in consultation with the Office of General Counsel, review the document and will transmit it to the General Manager for approval.

5.4.5. *DEIS Transmittal and Review.*—Upon notification of approval from the General Manager, TVA will transmit the DEIS and appropriate notices to the Environmental Protection Agency (EPA) and other interested Federal, State, and local agencies (including State and regional A-95 clearinghouses). The Citizen Action Office will coordinate overall DEIS distribution and will maintain a master list of those who receive it. The length of the DEIS public comment period, normally no less than 45 days from publication of the notice of availability in the Federal Register, will be determined by the scoping committee. Copies of an EIS are normally provided free of charge unless the quantity, volume of demand, or the costs of distribution are unreasonable.

At any time in the DEIS process, the initiating office, in consultation with the Environmental Quality Staff and other interested offices, may provide for additional public involvement to supplement DEIS preparation. The type of and format for public involvement would be selected as appropriate to best facilitate timely and meaningful public input into the EIS process.

5.4.6. *FEIS Preparation.*—At the close of the DEIS public review period, the Environmental Quality Staff will, in consultation with the initiating office and other interested offices, determine the need for the preparation of a FEIS. If the requisite changes in the DEIS are limited to making minor factual corrections and explaining why the comments received do not warrant further response, an Errata Sheet containing only DEIS comments, responses, and factual corrections in the DEIS may be prepared by the initiating office. If other more extensive modifications are required, the initiating office will, in consultation with the Environmental Quality Staff and other interested offices, prepare a Preliminary FEIS utilizing an appropriate format (*see* CEQ Regs. § 1502.10). The Errata Sheet or Preliminary Final EIS will be prepared and circulated by the initiating office to the Environmental Quality Staff, Office of General Counsel, and other interested offices for review and comment. All reviewing offices will supply written comments concerning the Errata Sheet or Preliminary Final EIS to the initiating office with copies to the Environmental Quality Staff and Office of General Counsel.

The initiating office, with the advice and assistance of the Environmental Quality Staff, will review all comments received and modify, as appropriate, the Errata Sheet or the Preliminary FEIS. After the Errata Sheet or Preliminary FEIS is revised, the initiating office will transmit it to other interested offices for their final approval. The Environmental Quality Staff will, in consultation with the Office of the General Counsel, review the document and will transmit it to the General Manager for approval along with a list of environmental commitments made in the EIS.

Environmental mitigation measures committed to in the FEIS will be identified and implemented as described in section 5.5 (Mitigation Commitment Identification, Auditing, and Reporting).

5.4.7. *FEIS Transmittal.*—Upon notification of approval from the General Manager, TVA will transmit the FEIS and appropriate notices to EPA and other Federal, State, and local agencies (including State and regional A-95 clearinghouses) to whom copies of the DEIS were sent. The FEIS will also be sent to every person and organization to whom copies of the DEIS were sent or from whom comments were received.

5.4.8. *Record of Decision.*—After release of the FEIS, a Record of Decision shall be prepared by the General Manager or a designee. The record shall state what the decision was, what alternatives were considered, and which alternative(s) was considered to be environmentally preferable and the alternatives' associated environmental considerations (which may include a discussion of measures to be taken to mitigate adverse environmental impacts); (*see* CEQ Resg. § 1505.2), and monitoring reporting, and administrative arrangements. Records of decision will be made publicly available.

5.4.9. *Revisions and Supplements.*—If significant new information concerning action modifications, alternatives, or probable environmental effects becomes available, TVA will make such information available to the public. The initiating office shall consider preparing a revision or a supplement to any environmental document. The Environmental Quality Staff will, in consultation with the initiating office, Office of General Counsel, and other interested offices determine the method of making such information available to the public. If a formal administrative record is required for any action to be approved by the Board of Directors and if an EIS Supplement is prepared with respect to the proposed action, the EIS Supplement will be made a part of the administrative record.

5.4.10. *Adoption of Another Federal Agency's EIS.*—Whether or not TVA participated in its preparation, TVA may adopt another Federal agency's EIS if TVA determines that the other agency's EIS adequately assesses the TVA action. The Environmental Quality Staff shall determine whether the adopted EIS is still generally available. This determination may be based on consultation with other agencies and consideration of such factors as project size and initial date of issuance of the adopted EIS. If the adopted EIS is available, TVA will circulate its written finding that the adopted statement meets the standards for an adequate EIS, advise that copies of the EIS will be sent to any person or agency who so requests, and make the adopted statement available for public examination.

If the adopted EIS is not generally available, TVA will circulate its written finding that the adopted statement is an adequate EIS along with either the adopted EIS or a summary thereof (*see* CEQ Regs. § 1502.12).

If TVA decides to adopt another agency's EIS in whole or part, but determines that

significant supplementary information is needed, the Environmental Quality Staff will determine whether the adopted EIS is still generally available. If the EIS is still available, TVA will circulate only the TVA Supplement as a draft and final supplement, advise that copies of the adopted EIS will be sent to any person or agency who so requests, and make the adopted statement available for public examination. If the EIS is not generally available, TVA will circulate its supplement along with either the adopted EIS or a summary thereof (*see* CEQ Regs. § 1502.12).

5.5 *Mitigation Commitment Identification, Auditing, and Reporting.*—All measures which are planned to minimize or mitigate expected significant environmental impacts shall be identified in the EIS or EA. Each such commitment will be tentatively assigned by the initiating office to the appropriate responsible office and such assignments shall be transmitted to the Environmental Quality Staff and the affected offices. The initiating office should consult with the assigned offices to resolve assignment conflicts, to identify supporting offices, and to determine schedules for commitment resolution as necessary. The initiating office will report to the Environmental Quality Staff the status of commitment resolution. The Environmental Quality Staff will ensure that commitments are met and will, as it deems appropriate, audit commitment resolution.

5.6 *Emergency Action.*—Because of unforeseen situations or emergencies, or through inadvertence, or for other reasons, some of the steps outlined in these procedures may be consolidated, modified, or omitted. The Environmental Quality Staff and the Office of the General Counsel shall be promptly notified and asked to approve any such consolidation, modification, or omission, and may do so if such change would conform to legal requirements and substantially comply with the intent of these procedures. The Environmental Quality Staff, in consultation with the Office of the General Counsel, will consult with CEQ when appropriate before such changes are approved.

5.7 *Miscellaneous Procedures:*

5.7.1 *Proposals for Legislation.*—Proposals for Congressional legislation significantly affecting the quality of the human environment will require the preparation of an EIS (*see* CEQ Regs. § 1506.8).

5.7.2 *Private Applicants.*—In those cases when private applicants or other non-Federal entities propose to undertake an action that will require TVA's approval or involvement, and which is not covered under a categorical exclusion, the contacted office will as soon as possible notify the Environmental Quality Staff of the proposed action. Each office will maintain information to advise potential applicants of studies or other data that may be required in connection with applications, and will take reasonable steps to publicize accessibility of such information. The office charged with the responsibility of initiating action upon the applicant or requesting party's request, will in consultation with the Environmental Quality Staff, when practicable, advise the applicant or requesting party of the information or studies (including the preparation of environmental documents, if necessary) that will be required in order for TVA to fulfill its responsibilities hereunder. The applicant or requesting party must provide to TVA sufficient information to allow an accurate determination of the environmental impacts of the proposed action. TVA may require that this information be submitted in the form of a written environmental report. If TVA is required to make investigations or otherwise incur additional expenses, the applicant may be charged for TVA's service. The Environmental Quality Staff, in consultation with the Office of General Counsel, will also determine the need to consult early with appropriate Federal, State, and local agencies (including State and regional A-95 clearinghouses); Indian tribes; and other interested persons regarding TVA's involvement in or approval of the applicant's proposed action and, where appropriate, should commence such consultation at the earliest practicable time.

5.7.3. *Outside Agency EIS Review.*—The Environmental Quality Staff, in consultation with other interested offices, will review EIS's within TVA's jurisdiction, special expertise, or authority submitted to TVA by other Federal agencies. The Environmental Quality Staff will prepare responses to such statements and will, after coordination with the Office of General Counsel, transmit such responses to the initiating agency (*see* CEQ Regs. §§ 1503.2 and 3).

5.7.4. *Supplemental Instruction.*—The Environmental Quality Staff, in consultation with interested offices and with the concurrence of the Office of General Counsel, may issue supplemental or explanatory instructions to these procedures.

5.7.5. *Modifications of These Procedures.*—The assignments to offices in these procedures can be modified by agreement of the offices involved or by instructions from the General Manager.

5.7.6. *Tiering.*—An initiating office may consider tiering the environmental review of a proposed action. Tiering involves coverage of general matters in broader environmental documents and subsequent narrower analyses need only incorporate by reference the broader analyses (*see* CEQ Regs. § 1508.28).

5.7.7. *Combining Documents.*—Any environmental document may be combined with any other document to reduce duplication and paperwork.

5.7.8 *Applicability to Ongoing Actions.*—These procedures shall not apply to those actions which have been approved under applicable procedures prior to the effective date of these procedures or for which an EA or a DEIS has already been prepared. No environmental documents need be redone by reason of the adoption of these revised procedures.

5.7.9 *Consolidation of Reviews.*—Review of proposed actions under these procedures may be consolidated with other reviews where such consolidation would reduce duplication or increase efficiency.

5.7.10 *Commencement of Action.*—Except in emergency circumstances, an action for which an EIS has been approved should not commence until 30 days after notice of availability for the final statement has been published in the Federal Register or 90 days after a notice of availability of the DEIS has been published in the Federal Register, whichever is later.

5.7.11 *Documents.*—The Environmental Quality Staff shall keep on file all final and approved environmental documents.

5.7.12 *Substantial Compliance.*—Minor deviations from these procedures will be permitted. But in all respects substantial compliance must be achieved. Flexibility is key to implementing these procedures and reviewing proposed actions.

5.7.13 *Reducing Paperwork and Delay.*—These procedures are to be interpreted and applied with the aim of reducing paperwork and the delay associated with both assessment and implementation of a proposed action. In this regard, data and analyses shall be commensurate with the importance of associated impacts. Less important material should be summarized, consolidated, or referenced.

5.7.14 *Office Responsible for NEPA Compliance Efforts.*—The Director of the Environmental Quality Staff is designated as that person responsible for overall review of TVA's NEPA compliance efforts.

5.7.15 *Status Reports.*—Information or status reports on EIS's and other related NEPA compliance activities and documents may be obtained by writing the Director, Environmental Quality Staff, Tennessee Valley Authority, Norris, Tennessee 37828.

5.7.16 *Public Participation.*—TVA's policy is to encourage public participation in all of its decisionmaking. The policy is implemented through various mechanisms. TVA has open meetings of the Board of Directors. These Board meetings are widely publicized and include a question and answer session between the public and the Board of Directors. TVA has established a Citizen Action Office whose responsibility it is to seek to maximize to the extent practicable the interchange of ideas between TVA and the public in the full range of TVA activities. In addition, TVA has set up a "Citizen Action Line" which allows members of the public to call in on toll-free lines to ask questions and make suggestions or comments to TVA. In line with TVA's broad policies, TVA intends to encourage and actively seek public participation in its NEPA review process. The type of and format for public participation will be selected as appropriate to best facilitate timely and meaningful public input into the review process.

W. F. Willis,

General Manager, Tennessee Valley Authority.

[FR Doc. 80-24811 Filed 8-14-80; 8:45 am]

BILLING CODE 8120-01-M

Sunshine Act Meetings

Federal Register
Vol. 45, No. 160
Friday, August 15, 1980

This section of the FEDERAL REGISTER contains notices of meetings published under the "Government in the Sunshine Act" (Pub. L. 94-409) 5 U.S.C. 552b(e)(3).

CONTENTS

	Items
Federal Deposit Insurance Corporation	1-4
Federal Energy Regulatory Commission	5, 6
Federal Home Loan Bank Board	7
Federal Maritime Commission	8
Federal Reserve System	9
Legal Services Corporation	10
Securities and Exchange Commission	11

1

FEDERAL DEPOSIT INSURANCE CORPORATION.

Notice of agency meeting.

Pursuant to subsection (e)(2) of the "Government in the Sunshine Act" (5 U.S.C. 552b(e)(2)), notice is hereby given that at 9:00 p.m. on Friday, August 8, 1980, the Board of Directors of the Federal Deposit Insurance Corporation met by telephone conference call to consider certain matters which it determined, on motion of Chairman Irvine H. Sprague, seconded by Director William M. Isaac (Appointive), concurred in by Mr. Cantwell F. Muckenfuss, III, acting in the place and stead of Director John G. Heimann (Comptroller of the Currency), required its consideration on less than seven days' notice to the public.

The Board met in closed session to (1) accept sealed bids for the purchase of certain assets of and the assumption of the liability to pay deposits made in The Mission State Bank & Trust Company, Mission, Kansas, which was closed by the Kansas State Bank Commissioner on August 8, 1980; (2) accept the bid for the transaction submitted by Mission State Bank, a newly-chartered State bank; (3) approve a resulting application of Mission State Bank for Federal deposit insurance, for consent to purchase certain assets of and assume the liability to pay deposits made in the closed bank, for consent to establish the sole office (facility) of The Mission State Bank & Trust Company as a branch of the resultant bank, and for consent to exercise full trust powers; (4) provide such financial assistance, pursuant to section 13(e) of the Federal Deposit Insurance Act (12 U.S.C. 1823(e)), as was necessary to effect the purchase and assumption transaction; and (5) appoint a liquidator for such of the assets of the closed bank as were not purchased by Mission State Bank.

In considering the matters in a closed session, the Board determined, by the same majority vote, that no earlier notice of the meeting was practicable; that the public interest did not require consideration of the matters in a meeting open to public observation; and that the matters could be considered in a closed meeting pursuant to subsections (c)(8), (c)(9)(A)(ii), and (c)(9)(B) of the "Government in the Sunshine Act" (5 U.S.C. 552b(c)(8), (c)(9)(A)(ii), and (c)(9)(B)).

Dated: August 11, 1980.

Federal Deposit Insurance Corporation.

Hoyle L. Robinson.

Executive Secretary.

[S-1538-80 Filed 8-13-80; 11:35 am]

BILLING CODE 6714-01-M

2

FEDERAL DEPOSIT INSURANCE CORPORATION.

Notice of changes in subject matter of agency meeting.

Pursuant to the provisions of subsection (e)(2) of the "Government in the Sunshine Act" (5 U.S.C. 552b(e)(2)), notice is hereby given that at its open meeting held at 2:00 p.m. on Monday, August 11, 1980, the Board of Directors of the Federal Deposit Insuance Corporation determined, on motion of Chairman Irvine H. Sprague, seconded by Mr. Lewis G. Odom, Jr., acting in the place and steed of Director John G. Heimann (Comptroller of the Currency), concurred in by Director William M. Isaac (Appointive), the Corporation business required the addition to the agenda for consideration at the meeting, on less than seven days' notice to the public, of the following matters:

A request by First Pennsylvania Bank N.A., Bala-Cynwyd, Pennsylvania for a waiver of Section 6.5 of the Credit Agreement between First Pennsylvania Bank N.A. and the Federal Deposit Insurance Corporation.

Memorandum proposing the establishment of a checking account for the receipt and disbursement of funds involved in the operation of San Luis Rey Downs, Inc., a property acquired by the Corporation in connection with the receivership of United States National Bank, San Diego, California.

The Board further determined, by the same majority vote, that no earlier notice of the changes in the subject matter of the meeting was practicable.

Dated: August 11, 1980.

Federal Deposit Insurance Corporation.

Hoyle L. Robinson,

Executive Secretary.

[S-1539-80 Filed 8-13-80; 11:35 am]

BILLING CODE 6714-01-M

3

FEDERAL DEPOSIT INSURANCE CORPORATION.

Notice of changes in subject matter of agency meeting.

Pursuant to the provisions of subsection (e)(2) of the "Government in the Sunshine Act" (5 U.S.C. 552(b)(e)(2)), notice is hereby given that at its closed meeting held at 2:30 p.m. on Monday, August 11, 1980, the Corporation's Board of Directors determined, on motion of Chairman Irvine H. Sprague, seconded by Director William M. Isaac (Appointive), concurred in by Mr. Lewis G. Odom, Jr., acting in the place and stead of Director John G. Heimann (Comptroller of the Currency), that Corporation business required the addition to the agenda for consideration at the meeting, on less than seven days' notice to the public, of the following matters:

Application of Bank of Manhattan, a proposed new bank, to be located at the northeast corner of the intersection of 33rd Street and Sepulveda Boulevard in the Manhattan Village Shopping Center, Manhattan Beach, California, for Federal deposit insurance.

Memorandum regarding the submission of periodic reports by First Pennsylvania Bank N.A., Bala-Cynwyd, Pennsylvania.

Request by First Pennsylvania Bank N.A., Bala-Cynwyd, Pennsylvania and First Pennsylvania Corporation, Philadelphia, Pennsylvania, for waiver of certain reporting requirements.

The Board further determined, by that same majority vote, that no earlier notice of these changes in the subject matter of the meeting was practicable; that the public interest did not require consideration of the matters in a meeting open to public observation; and that the matters could be considered in a closed meeting by authority of subsections (c)(6), (c)(8), (c)(9)(A)(ii),

and (c)(9)(B) of the "Government in the Sunshine Act" [5 U.S.C. 552b(c)(6), (c)(8), (c)(9)(A)(ii), and (c)(9)(B)].

Dated: August 11, 1980.

Federal Deposit Insurance Corporation.

Hoyle L. Robinson,

Executive Secretary.

[S-1510-80 Filed 8-13-80; 11:35 am]

BILLING CODE 6714-01-M

4

FEDERAL DEPOSIT INSURANCE CORPORATION.

Notice of agency meeting.

Pursuant to the provisions of the "Government in the Sunshine Act" [5 U.S.C. 552b], notice is hereby given that at 4:15 p.m. on Tuesday, August 12, 1980, the Board of Directors of the Federal Deposit Insurance Corporation met by telephone conference call to consider the application of Bank of Manhattan, a proposed new bank, to be located at the northeast corner of the intersection of 33rd Street and Sepulveda Boulevard in the Manhattan Village Shopping Center, Manhattan Beach, California, for Federal deposit insurance.

In calling the meeting, the Board of Directors determined, on motion of Chairman Irvine H. Sprague, seconded by Director William M. Isaac (Appointive), concurred in by Mr. Lewis G. Odom, Jr., acting in the place and stead of Director John G. Heimann (Comptroller of the Currency), that Corporation business required its consideration of the matter on less than seven days' notice to the public; that no earlier notice of the meeting was practicable; that the public interest did not require consideration of the matter in a meeting open to public observation; and that the matter could be considered in a closed meeting by authority of subsections (c)(6), (c)(8), and (c)(9)(A)(ii) of the "Government in the Sunshine Act" (5 U.S.C. 552b(c)(6), (c)(8), and (c)(9)(A)(ii)).

Dated: August 12, 1980.

Federal Deposit Insurance Corporation.

Hoyle L. Robinson,

Executive Secretary.

[S-1543-80 Filed 8-13-80; 3:21 pm]

BILLING CODE 6714-01-M

5

FEDERAL ENERGY REGULATORY COMMISSION.

"FEDERAL REGISTER" CITATION OF PREVIOUS ANNOUNCEMENT: 45 FR 53312-53313, August 11, 1980.

PREVIOUSLY ANNOUNCED TIME AND DATE OF MEETING: 10 a.m., August 13, 1980.

CHANGE IN THE MEETING: The following items have been added:

Item No., Docket Number, and Company

CAM-5—RM80-42, Tax Normalization for Certain Items Reflecting Timing Differences in the Recognition of Expenses or Revenues for Ratemaking and Income Tax Purposes.

M-10—RA80-48, Alfred M. Rousseau (Rousseau's Texaco).

Kenneth F. Plumb,

Secretary.

[S-1534-80 Filed 8-12-80; 4:17 pm]

BILLING CODE 6450-85-M

6

FEDERAL ENERGY REGULATORY COMMISSION.

"FEDERAL REGISTER" CITATION OF PREVIOUS ANNOUNCEMENT: 45 FR 53312-53313, August 11, 1980).

PREVIOUSLY ANNOUNCED TIME AND DATE OF MEETING 10 a.m., August 13, 1980.

CHANGE IN THE MEETING: The following items have been added:

Item Number, Docket Number, and Company

CAP-16—E-8187, E-8700, ER79-216, Boston Edison Company.

CAP-19—Securities and Exchange Docket No. 70-6273, Blackhawk Coal Company.

Kenneth F. Plumb,

Secretary.

[S-1535-80 Filed 8-12-80; 4:19 pm]

BILLING CODE 6450-85-M

7

FEDERAL HOME LOAN BANK BOARD.

"FEDERAL REGISTER" CITATION OF PREVIOUS ANNOUNCEMENT: Vol. 45, FR p. 53632, August 12, 1980.

PREVIOUSLY ANNOUNCED TIME AND DATE OF MEETING 10 a.m., August 15, 1980.

PLACE: 1700 G street NW., board room sixth floor, Washington, D.C.

STATUS: Open meeting.

CONTACT PERSON FOR MORE INFORMATION: Mr. Marshall (202-377-6677).

CHANGES IN THE MEETING: The following items have been added to the agenda for the open meeting:

Application for Permission to Convert from a Federal Mutual to Federal Stock Form—Oakland Federal Savings & Loan Association, Oakland, California.

Application for Permission to Convert from a State Mutual to State Stock Form—Denison Savings & Loan Association of Denison, Denison, Texas.

Application for Permission to Convert from a North Carolina Chartered Mutual to the Stock Form—United Savings & Loan Association of Mount Airy, Mount Airy, North Carolina.

Application for Permission to Convert from a Federal Mutual to Federal Stock Form—Freedom Federal Savings & Loan Association of High Point, High Point, North Carolina.

Application for Bank Membership—Ware Savings Bank, Ware, Massachusetts.

Regulation on Service Corporation Investment Authority.

Regulation on Mutual Savings Banks.

Regulation on Amendments Relating to Change in Control.

Regulation on Mutual Capital Certificates.

Announcement is being made at the earliest practicable time.

No. 374, August 13, 1980.

[S-1541-80 Filed 8-13-80; 2:58 pm]

BILLING CODE 6720-01-M

8

FEDERAL MARITIME COMMISSION.

TIME AND DATE: 9 a.m., August 20, 1980.

PLACE: Hearing Room One, 1100 L Street, NW., Washington, D.C. 20573.

STATUS: Parts of the meeting will be open to the public. The rest of the meeting will be closed to the public.

MATTERS TO BE CONSIDERED: Portions open to the public:

1. Agreement Nos. 9718-7, 9731-8, 9635-5, 9975-7, 10116-4, 10274-1 Japanese Space Chartering and Pooling Agreements.

2. Docket No. 80-5—Dynamic International Freight Forwarders, Inc., Independent Ocean Freight Forwarder License Application and Possible Violation of Section 44, Shipping Act, 1916—Consideration of the Record.

3. Informal Docket No. 699(I)—Gladish & Associates v. Sea-Land Service, Inc.—Review of Settlement Officer's decision.

4. Special Docket No. 724—Application of Sea-Land for benefit of Star-Kist Foods, Inc.—Consideration of the Record.

Portion closed to the public:

1. Docket No. 80-45—Agreement Nos. 10386, as Amended, 10388, 10382, as Amended, and 10389—Cargo Revenue Pooling/Equal Access Agreements in the United States/Argentine Trades—Petition for Stay of June 30, 1980 Order.

CONTACT PERSON FOR MORE INFORMATION: Joseph C. Polking, Assistant Secretary (202) 523-5725.

[S-1533-80 Filed 8-12-80; 4:18 pm]

BILLING CODE 6730-01-M

9

FEDERAL RESERVE SYSTEM.

(Board of Governors)

TIME AND DATE: 10 a.m., Wednesday, August 20, 1980.

PLACE: Board Building, C Street entrance between 20th and 21st Streets NW., Washington, D.C. 20551.

STATUS: Open.

MATTERS TO BE CONSIDERED: Summary agenda: Because of its routine nature, no substantive discussion of the following

item is anticipated. This matter will be voted on without discussion unless a member of the Board requests that the item be moved to the discussion agenda.

1. Proposed Interpretations of Regulation B (Equal Credit Opportunity) relating to credit scoring. (Proposed earlier for public comment; docket No. R-0203)

Discussion Agenda:

1. Alternatives relating to Federal Reserve fleet pursuant to implementation of the Monetary Control Act.
2. Proposed delay of the mandatory effective date of amendments to Regulation Z (Truth in Lending) concerning computation of annual percentage rates.
3. Proposed policy concerning bank holding company participation in financial futures, forward and standby contracts.
4. Any agenda items carried forward from a previously announced meeting.

Note.—This meeting will be recorded for the benefit of those unable to attend. Cassettes will be available for listening in the Board's Freedom of Information Office, and copies may be ordered for $5 per cassette by calling (202) 452-3684 or by writing to: Freedom of Information Office, Board of Governors of the Federal Reserve System, Washington, D.C. 20551.

CONTACT PERSON FOR MORE INFORMATION: Mr. Joseph R. Coyne, Assistant to the Board (202) 452-3204.

Dated: August 12, 1980.

Theodore E. Allison,

Secretary of the Board.

[S-1536-80 Filed 8-12-80; 4:42 pm]

BILLING CODE 6210-01-M

10

LEGAL SERVICES CORPORATION.

(Committee on Appropriations and Audit)

TIME AND DATE: 9 a.m.-5 p.m., Thursday, August 21, 1980.

PLACE: Bolton Valley Resort, King George Room, third floor, Bolton, Vermont.

STATUS: Open meeting.

MATTERS TO BE CONSIDERED:

1. Adoption of Agenda.
2. Approval of Minutes of the June 9, 1980 Meeting.
3. Discussion of Budget Modifications Procedures.
4. Third Quarter Budget Review for Fiscal Year 1980.
5. Status of the Fiscal Year 1981 Budget.
6. Fiscal Year 1982 Budget Request.
7. Status of Unexpended Investment Income.
8. Other Business.

CONTACT PERSON FOR MORE INFORMATION: Dellanor Khasakhala, Office of the President, telephone (202) 272-4040.

Issued: August 12, 1980.

Dan J. Bradley,

President.

[S-1537-80 Filed 8-12-80; 4:45 pm]

BILLING CODE 6820-35-M

11

SECURITIES AND EXCHANGE COMMISSION.

Notice is hereby given, pursuant to the provisions of the Government in the Sunshine Act, Pub. L. 94-409, that the Securities and Exchange Commission will hold the following meetings during the week of August 18, 1980, in Room 825, 500 North Capitol Street, Washington, D.C.

A closed meeting will be held on Tuesday, August 19, 1980, at 10:00 a.m. An open meeting has been scheduled for Thursday, August 21, 1980, at 10:00 a.m. (See 45 FR 53492, August 13, 1980, for previously noticed items on the open meeting agenda.)

The Commissioners, their legal assistants, the Secretary of the Commission, and recording secretaries will attend the closed meeting. Certain staff members who are responsible for the calendared matters may be present.

The General Counsel of the Commission, or his designee, has certified that, in his opinion, the items to be considered at the closed meeting may be considered pursuant to one or more of the exemptions set forth in 5 U.S.C. 522b(c)(4)(8)(9)(A) and (10) and 17 CFR 200.402(a)(4)(8)(9)(i) and (10).

Commissioner Evans, as Duty Officer, determined to hold the aforesaid meeting in closed session.

The subject matter of the closed meeting scheduled for Tuesday, August 19, 1980, at 10:00 a.m., will be:

Subpoena enforcement action.
Settlement of injunctive actions.
Formal order of investigation.
Access to investigative files by Federal, State, or Self-Regulatory authorities and litigation matter.
Freedom of Information Act appeals.
Institution and settlement of administrative proceedings of an enforcement nature.
Institution of administrative proceedings of an enforcement nature.
Institution of injunctive actions.
Regulatory matters regarding financial institutions.
Freedom of Information Act appeal and confidential treatment request.
Litigation matter.

The additional matters on the open meeting scheduled for Thursday, August 21, 10:00 a.m., will be:

1. Consideration of whether to issue a release announcing the adoption of amendments to Rule 16b-3 under the Securities Exchange Act of 1934 that would exempt from the short-swing profit recovery provisions of Section 16(b) of the Act certain acquisitions and dispositions of stock by a director or officer upon the exercise of an employee stock option. For further information, please contact Michael R. Kargula at (202) 272-2573.

2. Consideration of whether to issue the following four releases as part of the integrated disclosure program: (a) a release announcing the adoption of amendments to Form 10-K, Rule 14a-3, Rule 14c-3, and Regulation S-K to revise and restructure the annual report; (b) a release announcing the adoption of Form S-15 for registration under the Securities Act of 1933 of securities issued in certain business combination transactions; (c) a release requesting comments on three proposed new forms to be used to register offerings of securites under the Securities Act; and (d) a release requesting comments on proposed amendments to Form 10-Q. For further information, please contact John J. Huber at (202) 272-2589.

3. Consideration of whether to adopt a general revision of Articles 3 and 5 of Regulation S-X, and related amendments to Article 12 of Regulation S-X, Rules 14a-3 and 14c-3 of the proxy rules, and the creation of a new Item 12 of Regulation S-K. For further information, please contact Arthur J. Schmeiser at (202) 272-2133.

4. Consideration of whether to adopt amendments to existing rules which establish uniform instructions governing the periods to be covered by financial statements included in (1) most registration and reporting forms filed with the Commission under the Securities Act of 1933 and the Securities Exchange Act of 1934, and (2) annual reports to security holders furnished pursuant to the proxy rules; the amendments also permit companies filing registration statements under the Securities Act of 1933 to present interim financial information in the same degree of detail as is presently required in a Form 10-Q under the Securities Exchange Act of 1934. For further information, please contact Lawrence C. Best at (202) 272-2130.

5. Consideration of whether to affirm action, taken by the Duty Officer, granting access to non-public Commission documents to Barbara S. Thomas, Esquire, in connection with her nomination for the position of Commissioner, For further information, please contact Myrna Siegel at (202) 272-2430.

6. Consideration of whether to affirm action, taken by the Duty Officer, granting waivers from certain of the provisions of the Commission's Conduct Regulation in connection with the temporary employment of Edward V. O'Gara, Jr. For further information, please contact Myrna Siegel at (202) 272-2430.

7. Consideration of whether to adopt Rule 465 under the Securities Act of 1933, and related amendments to the registration statement forms for certain investment companies and to the Commission's Rules of Organization and Program Management, to permit most post-effective amendments filed by open-end management investment companies and unit investment trusts to become effective automatically without affirmative action on the part of the Commission or it staff. For further

information, please contact Dianne E. O'Donnell at (202) 272-2115 or Kathleen A. Jackson at (202) 272-2118.

8. Consideration of whether to grant the application of Leasco Corportion ("Leasco") for an order, pursuant to Sections 6(c) and 6(e) of the Investment Company Act of 1940 (the "Act"), subject to certain conditions and exceptions, exempting Leasco from all provisions of the Act. For further information, please contact Christopher Townsend at (202) 272-3035.

9. Consideration of whether to amend the Commission's rules relating to general organization to delegate to the Director of the Division of Investment Management the authority to process registration statements pertaining to constracts funded by or through the general assets or separate accounts of insurance companies. For further information, please contact William L. Strickland at (202) 272-2057.

10. Consideration of whether to issue a release setting forth interpretations of Rules 17Ad-1 through 17Ad-7, the turnaround rules, applicable to all registered transfer agents. for further information, please contact Lisa Gessow Michelson at (202) 272-2895 or Thomas V. Sjoblom at (202) 272-2910.

11. Consideration of a rulemaking petition filed by the Columbia Transfer Company, pursuant to Rule 4(a) of the Commission's Rules of Practice, seeking to have the Commission adopt a rule requiring all registered transfer agents and trust companies to place a restrictive legend on certificates of securities issued in unregistered offerings. For further information, please contact Lisa Gessow Michelson at (202) 272-2895 or Philip L. Sbarbaro at (202) 272-2911.

12. Consideration of whether to adopt a proposed amendment to Securities Exchange Act Rule 19d-1 to exempt national securities exchanges from having to provide the Commission with notice of uncontested summary disciplinary actions involving infractions of floor decorum regulations. For further information, please contact Susan M. Wilk at (202) 272-2824.

The following additional item will be considered at the closed meeting on Thursday, August 21, 180, following the 10:00 a.m. open meeting:

Freedom of Information Act appeal and confidential treatment request.

At times changes in Commission priorities require alterations in the scheduling of meeting items. For furhter information and to ascertain what, if any, matters have been added, deleted or postponed, please contact: Marsha McHarg at (202) 272-2468.

August 13, 1980.

[S-1542-80 Filed 8-13-80; 2:54 pm]

BILLING CODE 8010-01-M

federal register

Friday
August 15, 1980

Part II

Department of Labor

Employment Standards Administration

Minimum Wages for Federal and Federally Assisted Construction; General Wage Determination Decisions

DEPARTMENT OF LABOR

Employment Standards Administration, Wage and Hour Division

Minimum Wages for Federal and Federally Assisted Construction; General Wage Determination Decisions

General wage determination decisions of the Secretary of Labor specify, in accordance with applicable law and on the basis of information available to the Department of Labor from its study of local wage conditions and from other sources, the basic hourly wage rates and fringe benefit payments which are determined to be prevailing for the described classes of laborers and mechanics employed on construction projects of the character and in the localities specified therein.

The determinations in these decisions of such prevailing rates and fringe benefits have been made by authority of the Secretary of Labor pursuant to the provisions of the Davis-Bacon Act of March 3, 1931, as amended (46 Stat. 1494, as amended, 40 U.S.C. 276a) and of other Federal statutes referred to in 29 CFR 1.1 (including the statutes listed at 36 FR 306 following Secretary of Labor's Order No. 24-70) containing provisions for the payment of wages which are dependent upon determination by the Secretary of Labor under the Davis-Bacon Act; and pursuant to the provisions of part 1 of subtitle A of title 29 of Code of Federal Regulations, Procedure for Predetermination of Wage Rates (37 FR 21138) and of Secretary of Labor's Orders 12-71 and 15-71 (36 FR 8755, 8756). The prevailing rates and fringe benefits determined in these decisions shall, in accordance with the provisions of the foregoing statutes, constitute the minimum wages payable on Federal and federally assisted construction projects to laborers and mechanics of the specified classes engaged on contract work of the character and in the localities described therein.

Good cause is hereby found for not utilizing notice and public procedure thereon prior to the issuance of these determinations as prescribed in 5 U.S.C. 553 and not providing for delay in effective date as prescribed in that section, because the necessity to issue construction industry wage determination frequently and in large volume causes procedures to be impractical and contrary to the public interest.

General wage determination decisions are effective from their date of publication in the Federal Register without limitation as to time and are to be used in accordance with the provisions of 29 CFR Parts 1 and 5. Accordingly, the applicable decision together with any modifications issued subsequent to its publication date shall be made a part of every contract for performance of the described work within the geographic area indicated as required by an applicable Federal prevailing wage law and 29 CFR, Part 5. The wage rates contained therein shall be the minimum paid under such contract by contractors and subcontractors on the work.

Modifications and Supersedeas Decisions to General Wage Determination Decisions

Modifications and supersedeas decisions to general wage determination decisions are based upon information obtained concerning changes in prevailing hourly wage rates and fringe benefit payments since the decisions were issued.

The determinations of prevailing rates and fringe benefits made in the modifications and supersedeas decisions have been made by authority of the Secretary of Labor pursuant to the provisions of the Davis-Bacon Act of March 3, 1931, as amended (46 Stat. 1494, as amended, 40 U.S.C. 276a) and of other Federal statutes referred to in 29 CFR 1.1 (including the statutes listed at 36 FR 306 following Secretary of Labor's Order No. 24-70) containing provisions for the payment of wages which are dependent upon determination by the Secretary of Labor under the Davis-Bacon Act; and pursuant to the provisions of part 1 of subtitle A of title 29 of Code of Federal Regulations, Procedure for Predetermination of Wage Rates (37 FR 21138) and of Secretary of Labor's Orders 13-71 and 15-71 (36 FR 8755, 8756). The prevailing rates and fringe benefits determined in foregoing general wage determination decisions, as hereby modified, and/or superseded shall, in accordance with the provisions of the foregoing statutes, constitute the minimum wages payable on Federal and federally assisted construction projects to laborers and mechanics of the specified classes engaged in contract work of the character and in the localities described therein.

Modifications and supersedeas decisions are effective from their date of publication in the Federal Register without limitation as to time and are to be used in accordance with the provisions of 29 CFR Parts 1 and 5.

Any person, organization, or governmental agency having an interest in the wages determined as prevailing is encouraged to submit wage rate information for consideration by the Department. Further information and self-explanatory forms for the purpose of submitting this data may be obtained by writing to the U.S. Department of Labor, Employment Standards Administration, Wage and Hour Division, Office of Government Contract Wage Standards, Division of Construction Wage Determinations, Washington, D.C. 20210. The cause for not utilizing the rulemaking procedures prescribed in 5 U.S.C. 553 has been set forth in the original General Determination Decision.

New General Wage Determination Decisions

Illinois: IL80-2072

Modifications to General Wage Determination Decisions

The numbers of the decisions being modified and their dates of publication in the Federal Register are listed with each State.

California:	
CA79-5124	June 29, 1979.
CA79-5125	June 29, 1979.
Florida:	
FL79-1110	July 20, 1979.
FL80-1075	June 20, 1980.
Georgia:	
GA79-1148	Nov. 16, 1979.
GA79-1149	Nov. 23, 1979.
GA80-1066	Apr. 25, 1980.
Iowa:	
IA80-4046	Aug. 8, 1980.
New Hampshire:	
NH80-2057	Aug. 1, 1980.
New York:	
NY80-3035	Apr. 25, 1980.
NY80-3036	Apr. 25, 1980.
Ohio:	
OH80-2024	July 11,1980.
OH80-2028	Aug. 1, 1980.
OH80-2044	July 7, 1980.
OH80-2048	July 11, 1980.
OH80-2052	July 7, 1980.
Pennsylvania:	
PA79-3000	Jan. 25, 1979.
PA79-3012	May 18, 1979.
PA80-3029	Apr. 25, 1980.
PA80-3038	May 23, 1980.
Rhode Island:	
RI80-2054	July 18, 1980.
Tennessee:	
TN79-1104	June 29, 1979.
TN79-1146	Nov. 16, 1979.
TN80-1063	Mar. 21, 1980.
TN80-1067	Apr. 25, 1980.
TN80-1078	June 13, 1980.
Wisconsin:	
WI80-2043	June 27, 1980.

Supersedeas Decisions to General Wage Determination Decisions

The numbers of the decisions being superseded and their dates of publication in the Federal Register are listed with each State. Supersedeas decision numbers are in parentheses following the numbers of the decisions being superseded.

Connecticut:	
CT79-2010 (CT80-2073).	Apr. 6, 1979.
CT79-2011 (CT80-2074).	Apr. 6, 1979.
Illinois: IL79-2068 (IL80-2061).	Aug. 24, 1979.
Kansas: KS79-4090 (KS80-4069).	Oct. 5, 1979.
Kentucky: KY79-1145 (KY80-1089).	Nov. 16, 1979.
Maine: ME79-2042 (ME80-2069).	May 4, 1979.
Michigan:	
MI79-2012 (MI80-2062).	May 4, 1979.
MI79-2013 (MI80-2063).	May 4, 1979.
MI79-2014 (MI80-2064).	May 4, 1979.
MI79-2015 (MI80-2065).	May 4, 1979.
MI79-2017 (MI79-2067).	May 4, 1979.
New Hampshire: NH78-2100 (NH80-2056).	Oct. 6, 1978.
Virginia: VA 78-3100 (VA80-3052).	Dec. 8, 1978.

Cancellation of General Wage Determination Decisions

None.

Signed at Washington, D.C., this 18th day of August 1980.

Dorothy P. Come,

Assistant Administrator, Wage and Hour Division.

BILLING CODE 4510-27-M

NEW DECISION

STATE: Illinois COUNTY: Macon
DECISION NO.: IL80-2072 DATE: Date of Publication
DESCRIPTION OF WORK: Building Construction (including residential construction projects)

	Basic Hourly Rates	Fringe Benefits Payments			
		H & W	Pensions	Vacation	Education and/or Appr. Tr.
ASBESTOS WORKERS	$13.26	.90	1.04		
BOILERMAKERS	11.45	.95	1.20		.03
BRICKLAYERS & STONEMASONS; BLOCKLAYERS, POINTERS, CAULKERS, AND CLEANERS	13.60	.65	1.00		
CARPENTERS:					
Residential:					
All housing units not to exceed three (3) levels (including level below ground)	9.735	.65	.75		.08
Building:					
Carpenters	13.905	.65	.75		.08
CEMENT MASONS	13.95	.65	.575		
ELECTRICIANS:					
Residential:					
Work includes single family dwellings, duplexes, row houses, town houses, garden houses, and walk-up apartment buildings not to exceed 12 units	9.52	.55	3%+.50		.35%
Building	14.65	.55	3%+.50		.35%
GLAZIERS	11.34	.45	.50		
IRONWORKERS:					
East of Decatur	13.15	.75	1.25		.08
Remainder of County	13.70	.55	1.05		.08
LABORERS:					
Residential	8.45	.65	.75		.05
Building:					
Unskilled	12.05	.65	.90		.05
Semi-skilled	12.25	.65	.90		.05
Skilled	12.40	.65	.90		.05
PAINTERS:					
Brush and Roller	12.55	.80	.50		
Spray over quart cup	13.30	.80	.50		
PLASTERERS	14.17	.65	.575		
PLUMBERS & STEAMFITTERS:					
Residential:					
Work includes all housing not to exceed 12 units and not to exceed three (3) levels	11.34	.50	1.27		.15

DECISION NO. IL80-2072 (cont'd) Page 2

	Basic Hourly Rates	Fringe Benefits Payments			
		H & W	Pensions	Vacation	Education and/or Appr. Tr.
Building	$16.20	.50	1.27		.15
ROOFERS	13.68	.70	.60		.02
SHEET METAL WORKERS:					
Residential	9.58	.75	.83+a		.08
Building	14.33	.75	.83+a		.08
TILE SETTERS, MARBLE MASONS, TERRAZZO WORKERS	13.60	.65	1.00		.10
TRUCK DRIVERS:					
CLASS I	12.275	.85	41.00b		
CLASS II	12.675	.85	41.00b		
CLASS III	12.875	.85	41.00b		
WELDER - rate for craft					

FOOTNOTES:
a. 3% of gross earnings to SASMI
b. per week per employee

Unlisted classifications needed for work not included within the scope of the classifications listed may be added after award only as provided in the labor standards contract clauses (29 CFR, 5.5 (a)(1)(ii)).

MODIFICATIONS P. 1

DECISION NO. CA79-5124 - Mod. #2
(44 FR 38123 - June 29, 1979)
San Diego County, California

Change:

	Basic Hourly Rates	Fringe Benefits Payments			
		H & W	Pensions	Vacation	Education and/or Appr. Tr.
Painters:					
Brush, Paint Burner	$ 14.26	1.23	1.43	.75	.07
Brush (Swing Stage), Spray	14.51	1.23	1.43	.75	.07
Paperhanger, Spray (Swing Stage)	14.76	1.23	1.43	.75	.07
Sandblaster; Sandblaster (Swing Stage); Iron, Steel and bridge painter (Swing Stage); Iron, Steel and bridge painter Spray (Swing Stage)	15.26	1.23	1.43	.75	.07
Iron, Steel and bridge painter (groundwork); Iron, steel and bridge painters, Spray (groundwork); Riggers, climbing steel; Brush, climbing steel and bridge; Spray, climbing steel and bridge	15.01	1.23	1.43	.75	.07
Steeplejack	15.91	1.23	1.43	.75	.07

DECISION NO. CA79-5125 - Mod. #1
(44 FR 38127 - June 29, 1979)
San Diego County, California

Change:

	Basic Hourly Rates	Fringe Benefits Payments			
		H & W	Pensions	Vacation	Education and/or Appr. Tr.
Carpenters:					
Carpenters	$12.53	.71	$1.55	.80	.07
Piledrivermen	12.69	.71	1.55	.80	.07
Millwrights; Pnematic Nailer; Hardwood Floorlayers	12.81	.71	1.55	.80	.07
Drywall Installers	13.45	.71	1.55	.80	.07
Painters:					
Brush	14.26	1.38	1.43	.75	.07
Spray; Swing Stage, brush	14.51	1.38	1.43	.75	.07
Paperhangers; Spray, swing stage	14.76	1.38	1.43	.75	.07

MODIFICATIONS P. 2

DECISION NO. FL79-1110 - MOD. #6
(44 FR 42858 - July 20, 1979)
Dade County, Florida

CHANGE:

	Basic Hourly Rates	Fringe Benefits Payments			
		H & W	Pensions	Vacation	Education and/or Appr. Tr.
ASBESTOS WORKERS	$13.09	.55+.10	.65		.06
BOILERMAKERS	12.75	1.275	1.10		.04
IRONWORKERS	12.05	.98	1.00		.10
LABORERS (Permit value $500,000 and over):					
Air Tool Operators; Mason Tenders; Mortar Mixers; and Pipelayers	7.90	1.02	.50		
Plasterers' Tenders	8.08	1.02	.50		
Unskilled	7.80	1.02	.50		
LABORERS (Permit value up to $500,000):					
Air Tool Operators; Mason Tenders; Mortar Mixers; and Pipelayers	6.15	1.02	.50		
Plasterers' Tenders	6.33	1.02	.50		
Unskilled	6.05	1.02	.50		
MILLWRIGHTS	11.72	.65	.70		.10
PAINTERS:					
Brush	10.15	.55	.60		.07
Tapers; Paperhangers	10.05	.55	.60		.07
Spray; Sandblasters	10.65	.55	.60		.07
PILEDRIVERS	11.00	.65	.70		.10

DECISION NO. FL80-1075 Mod. #2
(45FR 41831 - June 20, 1980)
Duval county, Florida

CHANGE:

	Basic Hourly Rates	Fringe Benefits Payments			
		H & W	Pensions	Vacation	Education and/or Appr. Tr.
BOILERMAKERS	11.75	1.275	1.10		.04
SHEET METAL WORKERS	11.50	3% + .91	.96		.12

MODIFICATIONS P. 3

	Basic Hourly Rates	Fringe Benefits Payments			
		H & W	Pensions	Vacation	Education and/or Appr. Tr.
DECISION #GA79-1148 - Mod. #5 (44 FR 66135 - November 16, 1979) Chatham County, Georgia					
CHANGE:					
Carpenters & Soft floor layers	$10.50	.55			.05
Cement masons	8.75				
Millwrights	11.10	.55			.05
Piledrivermen	10.75	.55			.05
Plasterers	8.75				
DECISION #GA79-1149 - Mod. #4 (44 FR 67307 - November 23, 1979) Richmond County, Georgia					
CHANGE:					
Sheet metal workers	$10.65				.04
DECISION #GA80-1066 - Mod. #3 (45 FR 28062 - April 25, 1980) Clayton, DeKalb, & Fulton Counties, Georgia					
CHANGE:					
Asbestos workers	$12.30	.65	.90		.10
ADD:					
Elevator Constructor's Helpers	7.02	.895	.69	a + b	.03

MODIFICATIONS P. 4

	Basic Hourly Rates	Fringe Benefits Payments			
		H & W	Pensions	Vacation	Education and/or Appr. Tr.
DECISION NO. IA80-4046 - MOD. #1 (45 FR - August 8, 1980) Building Johnson County, Iowa					
Change:					
Carpenters:					
Carpenters	$12.50	.55	.55		.08
Piledrivermen	13.00	.55	.55		.08

Decision #NH80-2057
Modification #1
(45 FR 51411-Aug. 1, 1980)
Rockingham and Strafford Counties, New Hampshire

	Basic Hourly Rates	Fringe Benefits Payments			
		H & W	Pensions	Vacation	Education and/or Appr. Tr.
Add:					
Truck Drivers					
Class 1	6.41	.80	.50	a	
Class 2	6.64	.80	.50	a	
Class 3	6.87	.80	.50	a	

Class 1-Two axle equipment
Class 2-Three axle equipment including low beds
Class 3-Special earth hauling equipment other than conventional type on the road truck and semitrailers trailer dumps

PAID HOLIDAYS: A-New Year's Day; B-Memorial Day; C-Independence Day; D-Labor Day; E-Thanksgiving Day; F-Christmas Day.

Footnote: a Holidays: A through F, plus Washington's Birthday, Veteran's Day and Columbus Day; (provided employee works two days in the calender week in which the holiday falls; reports for work the last day assigned prior to the holiday and the the first assigned following the holiday).

DECISION NO. NY80-3035 - Mod. 1
(45 FR 28040 - April 25, 1980)
Broome & Chenango Counties, New York

	Basic Hourly Rates	Fringe Benefits Payments			
		H & W	Pensions	Vacation	Education and/or Appr. Tr.
Change:					
Asbestos Workers	13.83	.90	.93		.06
Boilermakers	13.50	1.175	10%		.03
Carpenters:					
Broome County and Chenango County (Twps. of Afton and the Southwest portion of Greene starting at a line at the Northwest corner of Greene Twp. and in a straight line going Southeast to the Northern boundaries of the Village of Greene and extending in a straight line to the Western boundary line of Coventry Twp., then south to the Broome County line					
Carpenters and Soft Floor Layers (Building)	10.86	.55	.70		.07
Millwrights and Piledrivermen (Building)	11.11	.55	.70		.07
Chenango County (Remainder of County)					
Carpenters, Dockbuilders, Millwrights, and Piledrivermen	11.20	.80	1.15	.55	.05
Electricians:					
Chenango County (New Berlin and Sherburne)					
Electricians	13.05	.80	3%+.60		.07
Cable Splicers	14.25	.80	3%+.60		.07
Broome County and Chenango County (Remainder of County)					
Electricians	12.51	.89	3%+.52	1.00	.05
Cable Splicers	14.26	.89	3%+.52	1.00	.05
Glaziers	9.97	.45	.65		.03
Ironworkers:					
Chenango County (Twps. of Smyrna, Sherburne, New Berlin, Columbus, Plymouth, North and Norwich)					
Structural, Ornamental, Reinforcing, Rodmen, Riggers, Machinery Movers, and Stone Derrickmen	12.17	1.11	1.02		.04
Sheeter	12.42	1.11	1.02		.04
Sheeter, Buckor-up	12.295	1.11	1.02		.04

MODIFICATIONS P. 7

DECISION NO. NY80-3035 - Mod. 1

Page 2

	Basic Hourly Rates	Fringe Benefits Payments			
		H & W	Pensions	Vacation	Education and/or Appr. Tr.
Laborers, Building					
Broome County and Chenango County (Remainder of County)					
All Classes of Common Laborers & Wreckers, Mason Tenders, Scaffold Builders, Bootmen Working in Concrete, Hod Carriers, Mortor Mixer (Hand or Machine), Asphalt Levelers, Vibrator Operator, Sewer Pipe Layer, Tunnel Laborer, Rockmen 8 Driller, Powderman, Pneumatic Tool Operators with 3/4" Bits and Over	9.68	.80	.80		
Painters:					
Broome County, Chenango County (Remainder of County)					
Brush	8.95	.45	.50		
Spray Epoxy	10.20	.45	.50		
Bridges	10.42	.45	.50		
Structural Steel, Spray, Steeple Jack	9.95	.45	.50		
Epoxy	9.20	.45	.50		
Swing Chair, Swing Scaffold, Roll over 10" and Sandblasting	9.45	.45	.50		
Sheet Metal Workers					
Broome County	12.42	3%+.60	.80		.11
Sprinkler Fitters	14.52	.85	1.20		.08

MODIFICAITONS P. 8

DECISION NO. NY80-3036 - Mod #2
(45 FR 28064 - April 25, 1980)
Onondaga County, New York

	Basic Hourly Rates	Fringe Benefits Payments			
		H & W	Pensions	Vacation	Education and/or Appr. Tr.
Change:					
Ironworkers:					
Structural, Ornamental, Machinery Mover & Rigger, Fence Erector, Reinforcing	12.38	.77	1.70		.10
Sheeter	12.63	.77	1.70		.10
Sheeter, Bucker-up	12.50	.77	1.70		.10
Marble, Tile & Terrazzo Workers	11.06	.75	1.06		
Marble, Tile & Terrazzo Finishers	9.80	.75	1.06		
Painters:					
Boatswain Chair	11.92	.80	.88		.05
Bridge	12.37	.80	.88		.05
Swing	11.82	.80	.88		.05
Brush, Roller, & Wallcovering	11.17	.80	.88		.05
Structural Steel	11.77	.80	.88		.05
Sandblasting	12.02	.80	.88		.05
Spray, Epoxy	11.67	.80	.88		.05
Taping	11.42	.80	.88		.05

MODIFICATIONS P. 9

	Basic Hourly Rates	Fringe Benefits Payments			
		H & W	Pensions	Vacation	Education and/or Appr. Tr.
DECISION NO. OH80-2024 - Mod. #1 (45 FR 47047 - July 11, 1980) Mahoning & Trumbull Counties, Ohio					
CHANGE:					
Boilermakers	$14.68	1.20	1.40		.03
DECISION NO. OH80-2028 - Mod. #1 45 FR 51416 - August 1, 1980) Ashtabula, Cuyahoga, Lake, Lorain, Portage, Stark, & Summit Counties, Ohio					
CHANGE:					
Electricians:					
Lake Co.:					
Commercial Construction	15.13	.95	3%+.70		.2%
Ashtabula Co. (Rem. of Co.):					
Residential Construction	8.10	1.00	3%		.002%
Line Construction:					
Lake Co.:					
Cable Splicers; Equipment Operators; & Linemen	15.13	.95	3%+.70		½%
Groundmen	9.83	.95	3%+.70		½%
DECISION NO. OH80-2044 - Mod. #1 (45 FR 45806 - July 7, 1980) Adams, Allen, Ashland, Auglaize, Brown, Butler, Carroll, Champaign Clark, Clermont, Clinton, Columbiana, Coshocton, Crawford, Darke Defiance, Delaware, Erie, Fairfield, Fayette, Franklin, Fulton, Gallia, Geauga, Greene, Hamilton, Hancock, Hardin, Henry, Highland, Holmes, Huron, Knox, Lawrence, Licking, Logan, Madison, Marion, Medina, Meigs, Mercer, Miami, Montgomery, Morrow, Muskingum, Ottawa, Paulding, Perry, Pickaway Pike, Preble, Putnam, Richland, Ross, Sandusky, Scioto, Seneca, Shelby, Tuscarawas, Union, Van Wert, Warren, Wayne, Williams, Wood, & Wyandot Counties, Ohio					

MODIFICAITONS P. 10

	Basic Hourly Rates	Fringe Benefits Payments			
		H & W	Pensions	Vacation	Education and/or Appr. Tr.
DECISION NO. OH80-2044 (Cont'd)					
CHANGE:					
Asbestos Workers:					
Crawford, Delaware, Fairfield, Fayette, Franklin, Hardin, Knox, Licking, Madison, Marion Morrow, Muskingum, Perry, Pickaway, Ross, & Union Cos.	$15.67	.85	.90		.02
Boilermakers:					
Allen, Ashland, Auglaize, Crawford, Darke, Defiance, Delaware, Erie, Fulton, Hancock, Hardin, Henry, Huron, Knox, Logan, Marion, Mercer, Morrow, Ottawa, Paulding, Putnam, Richland, Sandusky, Seneca, Shelby Union, Van Wert, Williams, Wood, & Wyandot Cos.	14.30	1.175	1.50		.28
Carroll, Coshocton , Geauga, Holmes, Medina, Tuscarawas, & Wayne, Cos.	14.68	1.20	1.40		.03
Bricklayers; Caulkers; Cleaners; Pointers; & Stonemasons:					
Medina (Twps. of Wadsworth, Guilford, Westfield, Lafayette, & Sharon), & Wayne (Twps. of Milton & Chippewa) Cos.	14.42	1.02	.80		.02
Carpenters:					
Adams, Fayette, Gallia, Highland, Lawrence, Meigs, Pike, Ross, & Scioto Cos.	12.42	.75	1.25		.05
Brown, Butler, Clermont, Clinton, Hamilton, & Warren Cos.	14.30	.90	1.10		.075
Cement Masons:					
Medina (except Twps. of Litchfield, Chatham, Harper, Harrisville & Spencer) Co.	13.69	.70	1.00		.02
Electricians:					
Adams, Pike (Twps. of Camp Creek, Marion, Newton, Scioto, Sunfish, & Scioto), & Scioto Cos.	14.00	.50	3%+.60	1.00	.04
Geauga (Rem. of Co.) Co.	15.13	.95	3%+.70		.2%
Medina (Rem. of Co.), & Wayne (N½) Cos.	14.77	.74	3%+.74		.2%
Meigs Co.	13.50	.50	3%+1.00	1.50	.04

DECISION NO. OH80-2044 (Cont'd)

	Basic Hourly Rates	Fringe Benefits Payments			
		H & W	Pensions	Vacation	Education and/or Appr. Tr.
Elevator Constructors:					
Adams, Brown, Butler, Clermont, Clinton, Darke, Greene, Hamilton, Highland, Miami, Montgomery, Preble, & Warren Cos.	14.32	1.195	.82	e&f	.035
Ashland, Champaign, Clark, Coshocton, Crawford, Delaware, Fairfield, Fayette, Franklin, Hardin, Holmes, Knox, Licking, Logan, Madison, Marion, Morrow, Muskingum, Perry, Pickaway, Richland, Ross, Shelby, Tuscarawas, & Union Cos.	14.40	1.195	.82	e&f	.035
Fulton, Hancock, Henry, Ottawa, Sandusky, Seneca, Wood, & Wyandot Cos.	$15.23	1.195	.96	e&f	.035
Ironworkers:					
Adams (W½), Brown, Butler (S½), Clermont, Clinton (S. of a line drawn from Blanchester to Lynchburg), Hamilton, Highland (exclu. E. 1/5 and portion of Co. inside lines drawn from Marshall to Lynchburg & from the N. Co. line through E. Monroe to Marshall), & Warren (S½) Cos.: Reinforcing	14.33	1.00	1.60		.02
Crawford (Area between lines drawn from where hwy 598 & 30 meet thru N. Liberty to the N. border & from said Hwy junction point due W. to the border), Defiance (S. of a line drawn from where Rt. 66 meets the N. Line thru Independence to the E. Co. border), Erie (W. 1/3), Fulton, Hancock, Hardin (N. of a line drawn from Maysville to a point 4 miles S. of the N. line on the E. line), Henry, Huron (W. of a line drawn from the N. Border thru Monroeville & Willard), Ottawa, Putnam (E. of a line drawn from the N. border down thru Miller City to where 696 meets the S. border), Sandusky, Seneca, Williams (E. of a line drawn from Pioneer thru Stryker to the S. border), Wood & Wyandot (Area N. of Rte. #30) Cos.	15.26	1.06	1.68		.09

DECISION NO. OH80-2044 (Cont'd)

	Basic Hourly Rates	Fringe Benefits Payments			
		H & W	Pensions	Vacation	Education and/or Appr. Tr.
Marble Setters' Finishers; Terrazzo Workers' Finishers; & Tile Setters' Finishers: Delaware, Fairfield, Franklin, Madison, Pickaway, & Union Cos.	$11.30				
Painters:					
Adams, Highland, Pike, & Scioto Cos.:					
Brush; Exterior Bldgs. under 40 ft.; Paper or Wall Covering; Taping & Washing	12.95		.80		.03
Floor Sanding; Power Tools; Rollers; & Swing Stage	13.45		.80		.03
Burning; Sandblasting; Spray; & Steamcleaning	13.95		.80		.03
Piledrivermen:					
Adams, Fayette, Gallia, Highland, Lawrence, Meigs, Pike, Ross, & Scioto Cos.	12.74	.75	1.25		.05
Brown, Butler, Clermont, Clinton, Hamilton, & Warren Cos.	14.30	.90	1.10		.075
Pipefitters; Plumbers; & Steamfitters:					
Allen, Auglaize, Hardin, Mercer Shelby, & Van Wert Cos.	14.75	.60	.90		.05
Delaware, Fairfield, Franklin, Licking, Madison (E. of Rte. #38 not inclu. city of London) Marion, Perry, Pickaway, Ross, & Union Cos.	15.42	1.07	.95		.07
Roofers:					
Adams, Gallia, Lawrence, Meigs, Muskingum, Pike & Scioto Cos.	13.50		.65		
Laborers:					
Columbiana Co.:					
Carpenter Tenders; General Laborers	10.75	.70	.90		.10

MODIFICATIONS P. 13

DECISION NO. OH80-2044 (Cont'd)

	Basic Hourly Rates	Fringe Benefits Payments			
		H & W	Pensions	Vacation	Education and/or Appr. Tr.
Brick Handlers; Men Mixing Cement for Cement Finishers; Mortar Mixer Machine Op.; Mortarmen for Masons & Plasterers; Scaffold Builders; Tenders for Brick Masons, Plasterers, Stone Masons, & Tile Setters	$10.92	.70	.90		.10
Acetylene Burners; Air Blow Pipe; Air Pump; Air Spades; Air Tampers; All Power Driven Tools; Chipping Hammers; Concrete Saw; Jackhammers; Laborers Operating Concrete Busters; Panel Cleaning Machine Operators; Pipelayer & Tenders Working in Ditches or Tunnels & Hand Spikers on Railroads, & Laborer Handling Concrete for Test or Working with Tar, Acid, & Creosote; Power Buggy; Power Saw; Sandblaster; Scuba Divers; Vibrators; & Welders	10.95	.70	.90		.10
Erie, Huron, Ottawa, & Sandusky Cos.:					
Building & Construction Laborers; Carpenter Tenders; Concrete Handler; Finisher Tenders; Guard Rail Erectors; Tool Crib-en; & Utility Construction Laborers	11.91	.70	.90		.10
Air & Power Driven Tools; Bottom Men; Burner on Demolition Work; Caisson Workers; Cofferdam Workers; Creosote Workers; Form Setters; Hod Carrier; Laser Beam Set Up Men; Mason Tenders; Mortar Mixers; Mucker; Pipelayers; Plasterers' Tenders; Powder Men & Dynamite Blasters; Scaffold; Swinging Scaffold; & Tunnel Laborers	12.11	.70	.90		.10

MODIFICATIONS P. 14

DECISION NO. OH80-2044 (Cont'd)

	Basic Hourly Rates	Fringe Benefits Payments			
		H & W	Pensions	Vacation	Education and/or Appr. Tr.
Gunnite Operator	$12.51	.70	.90		.10
Line Construction:					
Geauga (excl. Bainbridge, Chester, Russell, Auburn, Middlefield, Parkman & Troy Twps.) Co.:					
Cable Splicers; Equipment Ops. & Linemen	15.13	.95	3%+.70		½%
Truck Drivers (Winch) Groundman; Groundman	9.83	.95	3%+.70		½%
Medina (Brunswick, Chatham, Granger, Guilford, Harrisville, Hinckley, Homer, Lafayette, Medina, Montville, Sharon, Spencer, Wadsworth, Westfield, & York Twps.), & Wayne (Northern ½ of Co.) Cos.:					
Linemen	14.77	.74	3%+.74		½%
Cable Splicers	15.82	.74	3%+.74		½%
Equipment Operators	11.08	.74.	3%+.74		½%
Truck Drivers; Groundman	7.39	.74	3%+.74		½%
ADD:					
Truck Drivers:					
Allen, Auglaize, Defiance, Hancock (S. ½), Hardin, Logan, Mercer, Paulding, Putnam, Shelby, Union, & Van Wert Cos.:					
Low Boys	9.60	31.00a	11.00a		
Tenders	8.60	31.00a	11.00a		

MODIFICATIONS P. 15

DECISION NO. OH80-2048 - Mod. #1 (45 FR 47045 - July 11, 1980) Lucas County, Ohio	Basic Hourly Rates	Fringe Benefits Payments			
		H & W	Pensions	Vacation	Education and/or Appr. Tr.
CHANGE:					
Boilermakers	$14.30	1.175	1.50		.28
Elevator Constructors:					
Elevator Constructors	15.23	1.195	.95	a + b	.035
Helpers	70%JR	1.195	.95	a + b	.035
Ironworkers	15.26	1.06	1.68		.09

DECISION NO. OH80-2052 - Mod. #1 (45 FR 45834 - July 7, 1980) Statewide, Ohio	Basic Hourly Rates	Fringe Benefits Payments			
		H & W	Pensions	Vacation	Education and/or Appr. Tr.
CHANGE:					
Bricklayers & Stonemasons:					
Athens County	13.00	.80	1.00		.05
Medina (Rem. of Co.), Portage, Summit & Wayne (Twps. of Milton & Chippewa) Cos.:					
Bricklayers	14.42	1.02	.80		.02
Carpenters & Piledrivermen:					
Adams, Fayette, Gallia, Highland, Jackson, Lawrence, Meigs Pike, Ross, & Scioto Cos.:					
Carpenters	12.68	.75	1.25		.05
Piledrivermen	12.97	.75	1.25		.05
Allen, Auglaize, Champaign, Clark, Coshocton, Delaware, Fairfield, Franklin, Guernsey, Hardin, Holmes, Knox, Licking, Logan, Madison, Marion, Mercer Morgan, Morrow, Muskingum, Noble, Perry, Pickaway, Putnam Union, Van Wert, & Wyandot Cos.:					
Carpenters	12.72	.85	1.00		.04
Piledrivermen	13.37	.85	1.00		.04
Athens, Hocking, Vinton & Washington Counties:					
Carpenters	12.72	.85	1.00		.04
Piledrivermen	13.37	.85	1.00		.04

MODIFICATIONS P.16

DECISION NO. OH80-2052 (Cont'd)

	Basic Hourly Rates	Fringe Benefits Payments			
		H & W	Pensions	Vacation	Education and/or Appr. Tr.
Brown, Butler, Clermont, Clinton, Hamilton & Warren Cos.:					
Carpenters	$14.30	.90	1.10		.075
Piledrivermen	14.30	.90	1.10		.075
Darke, Greene, Miami, Montgomery, Preble & Shelby Cos.:					
Carpenters	12.65	1.00	1.40		.07
Piledrivermen	12.65	1.00	1.40		.07
Cement Masons:					
Ashtabula, Brown, Butler, Clermont, Columbiana, Defiance, Erie, Hamilton, Highland, Huron, Mahoning, Medina, Ottawa, Paulding, Portage, Sandusky, Seneca, Stark, Summit, Trumbull, Warren & Williams Cos.	13.18	.70	.70		.02
Cuyahoga, Fulton, Geauga, Hancock, Henry, Lake, Lorain, Lucas, Putnam, & Wood Cos.	13.83	.70	.70		.02
Remaining Counties	12.63	.70	.70		.02
Electricians:					
Adams, Jackson (All but Coal, Jackson, Liberty, Milton & Washington Twps.), Pike (Twps. of Camp Creek, Marion, Newton, Scioto, Sunfish & Union) & Scioto Cos.	14.00	.50	3%+.60	1.00	.04
Ashtabula Co. (All but Colebrook, Orwell, Wayne, Williamsfield & Windsor Twps.)	14.70	1.00	3%+1.00		.5%
Athens, Meigs, Monroe, Morgan, Noble, Vinton (East of Clinton, Elk & Swan Twps.) & Washington Cos.	13.50	.50	3%+1.00	1.50	.04
Geauga (except Auburn, Bainbridge, Chester, Middlefield, Parkman, Russell, & Troy Twps.), & Lake Cos.	15.13	.95	3%+.70		.2%

DECISION NO. OH80-2052 (Cont'd)

	Basic Hourly Rates	Fringe Benefits Payments			
		H & W	Pensions	Vacation	Education and/or Appr. Tr.
Medina (Rem. of Co.), Portage (exclu. Twps. of Charleston, Edinburg, Freedom, Hiram, Palmyra, Paris, & Windham), Summit, & Wayne (Rem. of Co.) Cos.	$14.77	.74	3%+.74		.2%
Ironworkers:					
Adams (W½), Brown, Butler (S½), Clermont, Clinton (S. of a line drawn from Blanchester to Lynchburg), Hamilton, Highland (exclu. E 1/5 & portion of Co. inside lines drawn from Marshall to Lynchburg & from the N. Co. line through E. Monroe to Marshall) & Warren (S½) Cos.:					
Reinforcing	14.33	1.00	1.60		.02
Crawford (Area between lines drawn from where hwy 598 & 30 meet thru N. Liberty to the N. border & from said hwy junction point due W. to the border), Defiance (S. of a line drawn from where Rte. 66 meets the N. line thru Independence to the E. Co. border), Erie (W 1/3), Fulton, Hancock, Hardin (N. of a line drawn from Maysville to a point 4 miles S. of the N. line on the E. line), Henry, Huron (W. of a line drawn from the N. border thru Monroeville & Willard), Lucas, Ottawa, Putnam (E. of a line drawn from the N. border down thru Miller City to where 696 meets the S. border), Sandusky, Seneca, Williams (E. of a line drawn from Pioneer thru Stryker to the S. border) Wood, & Wyandot (Area N. of Rte. #30) Cos.	15.26	1.06	1.68		.09

DECISION NO. OH80-2052 (Cont'd)

	Basic Hourly Rates	Fringe Benefits Payments			
		H & W	Pensions	Vacation	Education and/or Appr. Tr.
Painters:					
Adams, Highland, Jackson, Pike & Scioto Cos.:					
Brush	$13.95		.80		.03
Spray	14.95		.80		.03
Plumbers & Steamfitters:					
Allen, Auglaize, Hardin, Mercer, Shelby & Van Wert Cos.	14.75	.60	.90		.05
Delaware, Fairfield, Franklin, Hocking, Licking, Madison (Rem. of Co.), Marion, Perry, Pickaway, Ross & Union Cos.	15.42	1.07	.95		.07
Laborers:					
Zone 1:					
Group I	12.38	.70	.90		.10
Group II	12.505	.70	.90		.10
Group III	12.58	.70	.90		.10
Group IV	12.73	.70	.90		.10
Group V	13.03	.70	.90		.10
Zone 2:					
Group I	11.20	.70	.90		.10
Group II	11.325	.70	.90		.10
Group III	11.40	.70	.90		.10
Group IV	11.55	.70	.90		.10
Group V	11.85	.70	.90		.10
Zone 3:					
Group I	10.77	.70	.90		.10
Group II	10.895	.70	.90		.10
Group III	10.97	.70	.90		.10
Group IV	11.12	.70	.90		.10
Group V	11.42	.70	.90		.10
Power Equipment Operators:					
Zone 2:					
Class A	14.68	1.11	1.25		.15
Class B	14.58	1.11	1.25		.15
Class C	13.54	1.11	1.25		.15
Class D	13.07	1.11	1.25		.15
Class E	10.38	1.11	1.25		.15
Zone 3:					
Class A	13.94	1.11	1.25		.15
Class B	13.82	1.11	1.25		.15
Class C	12.78	1.11	1.25		.15
Class D	12.35	1.11	1.25		.15
Class E	9.49	1.11	1.25		.15

DECISION NO. OH80-2052 (Cont'd)

	Basic Hourly Rates	Fringe Benefits Payments			
		H & W	Pensions	Vacation	Education and/or Appr. Tr.
Truck Drivers:					
Zone I:					
Class I	$10.75	34.00a	30.00a	b&c	
Class II	10.90	34.00a	30.00a	b&c	
Class III	11.25	34.00a	30.00a	b&c	
Class IV	11.25	34.00a	30.00a	b&c	
Zone II:					
Class I	11.22	28.00a	21.00a		.05
Class II	11.27	28.00a	21.00a		.05
Class III	11.32	28.00a	21.00a		.05
Class IV	11.42	28.00a	21.00a		.05
Class V	11.69	28.00a	21.00a		.05
Class VI	11.52	28.00a	21.00a		.05
Line Construction:					
Geauga (Excl. Bainbridge, Chester, Russell, Auburn, Middlefield, Parkman & Troy Twps.), & Lake Cos.:					
Cable Splicers; Equipment Ops. & Linemen	15.13	.95	3%+.70		½%
Truck Drivers (Winch) Groundman; Groundman	9.83	.95	3%+.70		½%
Medina (Brunswick, Chatham, Granger, Guilford, Harrisville, Hinckley, Homer, Lafayette, Medina, Montville, Sharon, Spencer, Wadsworth, Westfield, & York Twps.), Portage (Atwater, Aurora, Brimfield, Deerfield, Franklin, Mantus, Randolph, Ravenna, Rootstown, Shalersville, Streetsboro & Suffield Twps.), Summit, & Wayne (Northern ½ of Co.) Cos.:					
Linemen	14.77	.74	3%+.74		½%
Cable Splicers	15.82	.74	3%+.74		½%
Equipment Operators	11.08	.74	3%+.74		½%
Truck Drivers; Groundman	7.39	.74	3%+.74		½%

DECISION NO. PA79-3000 - MOD. #9
(44 FR 5625 - January 25, 1979)

	Basic Hourly Rates	Fringe Benefits Payments			
		H & W	Pensions	Vacation	Education and/or Appr. Tr.
Butler, Cambria, Erie, Fayette, Mercer, Washington, Westmoreland, Lawrence, Somerset, Allegheny, Beaver, Armstrong, Blair, Cameron, Centre, Clarion, Clearfield, Crawford, Forest, Greene, Indiana, McKean, Venango, Warren, Bedford, Jefferson, Clinton, Elk, Franklin, Fulton, Huntingdon, Mifflin & Potter Counties, Pennsylvania					
CHANGE:					
Ironworkers:					
Structural, Ornamental & Reinforcing					
Zone 2	$12.905	1.34	1.36		.03
Zone 1					
Reinforcing	9.70	.785	.1415		.01
Line Construction					
Zone 1					
Lineman	15.40	.45	3%		3/8%
Winch Truck Op.	10.78	.45	3%		3/8%
Truck Drivers	10.01	.45	3%		3/8%
Groundman	9.24	.45	3%		3/8%
Zone 3					
Lineman, Dynamite man, heavy equipment op.	12.37	.55	3%		3/8%
Winch Truck op.	8.68	.55	3%		3/8%
Groundman	8.30	.55	3%		3/8%
Plumbers					
(Bridge-drain pipe)					
Allegheny, Washington, Greene, Armstrong	13.98	1.00	1.60		.07

MODIFICATIONS P. 21

	Basic Hourly Rates	Fringe Benefits Payments			
		H & W	Pensions	Vacation	Education and/or Appr. Tr.
DECISION NO. PA79-3012 - MOD. NO. 8 (44 FR 29253 - May 18, 1979) Adams, Berks, Bradford, Carbon, Columbia, Cumberland Dauphin, Juniata, Lackawanna Lancaster, Lebanon, Lehigh, Luzerne, Lycoming, Monroe, Montour, Northampton, Northumberland, Perry, Pike, Schuylkill, Snyder, Sullivan Susquehanna, Tioga, Union, Wayne, Wyoming and York Counties, Pennsylvania					
CHANGE:					
Ironworkers:					
Structural, Ornamental and Reinforcing Adams, Cumberland, Dauphin, Lancaster, Lebanon, Lycoming, Montour, Northumberland, Juniata, Perry Snyder, Union and York Counties, Pennsylvania	$12.905	1.34	1.36		.03

MODIFICATIONS P. 22

	Basic Hourly Rates	Fringe Benefits Payments			
		H & W	Pensions	Vacation	Education and/or Appr. Tr.
DECISION NO. PA80-3029 - MOD. #3 (45 FR 28069 - April 25, 1980) Lebanon County, Pennsylvania					
CHANGE:					
Carpenters	$11.86	.60	.70		.05
DECISION NO. PA80-3038 - MOD. #2 (45 FR 35148 - May 23, 1980) Lancaster County, Pennsylvania					
CHANGE:					
Carpenters	11.86	.60	.70		.05
Ironworkers	12.905	1.34	1.36		.03
Piledrivermen	11.97	2.63	1.40	d	.13

DECISION NO. RI80-2054 - Mod. #1
(45 FR 48451 - July 18, 1980)
Statewide, Rhode Island

	Basic Hourly Rates	Fringe Benefits Payments			
		H & W	Pensions	Vacation	Education and/or Appr. Tr.
Change:					
Building Construction:					
Cement Masons; Plasterers:					
Remainder of State:					
Cement Masons	$12.35	.90	.75		
Roofers:					
Composition, Waterproofers	12.15	.75	.70		
Slate, Tile, Precast Concrete	12.35	.75	.70		
Add:					
Building Construction:					
Truck Drivers:					
Dump & Two Axle Equipment Drivers	9.64	.9925	1.00		
Trailer & Three Axle Equipment Drivers	9.72	.9925	1.00		
Low Bed Trailers 24 Ton Rated Cap. & Over; I Beam Trailers; Specialized Earth Moving Equipment - Euclid Type	9.97	.9925	1.00		
Euclid Type Equipment Over 35 Ton Capacity	10.22	.9925	1.00		

DECISION #TN79-1104 - Mod. #6
(44 FR 38137 - June 29, 1979)
Hamilton, Marion, Polk, & Rhea Counties, Tennessee

	Basic Hourly Rates	Fringe Benefits Payments			
		H & W	Pensions	Vacation	Education and/or Appr. Tr.
CHANGE:					
Bricklayers, Stone masons, Cement masons, & Plasterers: Polk County Only	$10.50				
Carpenters, Carpet layers, & Floor layers	10.93	.57	.58		.08
Elevator Constructors:					
Mechanics	11.46	1.195	.95	a + b	.035
Helpers	8.02	1.195	.95	a + b	.035
Ironworkers:					
Structural & Ornamental	10.56	.50	.50		.02
Reinforcing	10.42	.50	.50		.02
Lathers	10.93	.57	.58		.08
Millwrights	11.38	.57	.58		.08
Piledrivermen	11.055	.57	.58		.08

DECISION #TN79-1146 - Mod. #3
(44 FR 66147 - November 16, 1979)
Davidson County, Tennessee

	Basic Hourly Rates	Fringe Benefits Payments			
		H & W	Pensions	Vacation	Education and/or Appr. Tr.
CHANGE:					
Millwrights	$12.65		.30		.11

DECISION #TN80-1063 - Mod. #2
(45 FR 18655 - March 21, 1980)
Carter, Greene, Hawkins, Johnson, Sullivan, Unicoi, & Washington Counties, Tennessee

	Basic Hourly Rates	Fringe Benefits Payments			
		H & W	Pensions	Vacation	Education and/or Appr. Tr.
CHANGE:					
Elevator Constructors:					
Mechanics	$10.56	1.195	.95	a + b	.035
Helpers	7.39	1.195	.95	a + b	.035

MODIFICATIONS P. 25

DECISION #TN80-1067 - Mod. #3
(45 FR 28071 - April 25, 1980)
Shelby County, Tennessee

CHANGE:

	Basic Hourly Rates	Fringe Benefits Payments			
		H & W	Pensions	Vacation	Education and/or Appr. Tr.
Bricklayers & Stone masons	$12.50	.63	.30		.15
Electricians:					
Wiremen & Electronic technicians	13.73	.95	3% + .50		½ of 1%
Cable splicers	13.83	.95	3% + .50		½ of 1%
Marble, Tile, & Terrazzo workers	9.91	.53	.36		.05

DECISION #TN80-1078 - Mod. #2
(45 FR 40465 - June 13, 1980)
Anderson, Knox, Monroe, & Roane Counties, Tennessee

CHANGE:

	Basic Hourly Rates	Fringe Benefits Payments			
		H & W	Pensions	Vacation	Education and/or Appr. Tr.
Elevator Constructors:					
Mechanics	$10.56	1.195	.95	a + b	.035
Helpers	7.39	1.195	.95	a + b	.035

MODIFICATIONS P. 26

DECISION NO. WI80-2043 MOD. #2
(45 FR 43649 - June 27, 1980)
Statewide, Wisconsin

CHANGE:

	Basic Hourly Rates	Fringe Benefits Payments			
		H & W	Pensions	Vacation	Education and/or Appr. Tr.
Electricians:					
Zone 10-Ashland, Bayfield, Burnett, Douglas, Iron, Sawyer, & Washburn Cos.	13.56	5%	7%	11%	1%

SUPERSEDEAS DECISION

STATE: Connecticut
DECISION NUMBER: CT80-2073
COUNTIES: *See below
DATE: Date of Publication
Supersedes Decision No.: CT79-2010 dated April 6, 1979 in 44 FR 20913
DESCRIPTION OF WORK: Building, Residential, Highway, and Heavy (excluding tunnel construction) Construction Projects

*Fairfield, Litchfield and Windham Counties

	Basic Hourly Rates	Fringe Benefits Payments			
		H & W	Pensions	Vacation	Education and/or Appr. Tr.
ASBESTOS WORKERS:					
Fairfield Co.; Litchfield Co., Barkhamsted, Bethlehem, Bridgewater, Cornwall, Goshen, Harwinton, Kent, Litchfield, Morris, New Hartford, New Milford, Plymouth, Roxbury, Sharon, Torrington, Warren, Washington, Watertown, Winchester, Woodbury, & Thomaston; Windham Co.: Ashford, Chaplin, Eastford, Hampton, Scotland & Windham	$14.04	.85	1.46		
Litchfield Co.: Canaan, Colbrook, Norfolk, N. Canaan, & Salisbury; Windham Co.: Woodstock	11.95	1.04	1.40		.01
Windham Co.: Brooklyn, Canterbury, Killingly, Plainfield, Pomfret, Putnam, Sterling & Thompson	12.18	1.45	1.33		
BOILERMAKERS	13.50	1.175	1.35		.03
BRICKLAYERS: Cement Masons; Finishers; Marble Masons; Plasterers; Stonemasons; Terrazzo Workers; Tile Setters (Building Construction):					
Fairfield Co.: Ansonia, Derby, & Shelton	10.80	.75	.75		
Fairfield Co.: Bridgeport, Easton, Fairfield, Monroe, Stratford, & Trumbull	10.98	.75	.75		
Fairfield Co.: New Canaan, Norwalk, Ridgefield, Weston, Westport, & Wilton	11.05	.75	.75		
Fairfield Co.: Darien & Stamford	11.47	.83	.25		

DECISION NO. CT80-2073

	Basic Hourly Rates	Fringe Benefits Payments			
		H & W	Pensions	Vacation	Education and/or Appr. Tr.
BRICKLAYERS: (cont'd)					
Fairfield Co.: Greenwich	$11.78	.80	.95		
Fairfield Co.: Bethel, Brookfield, Danbury, New Fairfield, Newtown Redding, & Sherman; Litchfield Co.: Bridgewater, Kent, New Milford, & Roxbury	10.95	.75	.75		
Litchfield Co.: Barkhamsted, Bethlehem, Canaan, Colebrook, Cornwall, Goshen, Harwinton, Litchfield, Morris, New Hartford, Norfolk, N. Canaan, Salisbury, Sharon, Torrington, Warren, Washington, Winchester,	10.85	.75	.75		
Windham Co.	11.05	.75	.75		
Litchfield Co.: Plainville, Plymouth, Prospect Thomaston, Watertown, & Woodbury	10.90	.75	.75		
BRICKLAYERS (Heavy & Highway Construction):					
Except Towns of Darien, Greenwich, & Stamford	10.90	.80	.75		b
Darien & Stamford	11.32	.80	.25		b
Greenwich	10.65	.80	.95		b
CARPENTERS; Millwrights; Piledrivermen, & Soft Floor Layers (Building Construction):					
Fairfield Co.: Bridgeport, Easton, Fairfield, Monroe, Shelton, Stratford, Trumbull, Weston, & Westport	12.00	.90	.65	c	v
Fairfield Co.: Bethel, Brookfield, Danbury, Darien, Greenwich, New Canaan, New Fairfield, Newtown, Norwalk, Redding, Ridgefield, Sherman, Stamford, & Wilton	11.80	.90	.65		.10

DECISION NO. CT80-2073

	Basic Hourly Rates	Fringe Benefits Payments			
		H & W	Pensions	Vacation	Education and/or Appr. Tr.
CARPENTERS: (cont'd)					
Litchfield Co.: Barkhamsted, Bethlehem, Bridgewater, Canaan, Colebrook, Cornwall, Goshen, Kent, Litchfield, Morris, New Hartford, New Milford, Norfolk, North Canaan, Roxbury, Salisbury, Sharon, Torrington, Warren, Washington, Winchester, & Woodbury:					
Commercial	$11.55	.90	.65		.10
Residential	10.20	.90	.50		.10
Litchfield Co.: Harwinton, Plymouth, Thomaston, & Watertown	12.00	.90	.65		.05
Windham Co.	12.00	.90	.65		.03
CARPENTERS (Heavy & Highway Construction):					
Fairfield Co.: Bridgeport, Easton, Fairfield, Monroe, Shelton, Stratford, Trumbull, Weston, & Westport	11.70	.90	.65	f	.05
Fairfield Co.: Bethel, Brookfield, Danbury, Darien, New Canaan, New Fairfield, Newton, Norwalk, Wilton, Redding, Ridgefield, Sherman, Stamford, & Litchfield Co.: Remainder of Co.	11.70	.90	.65	f+.70	.10
Litchfield Co.: Harwinton, Thomaston, & Watertown	11.70	.90	.65	f	.05
Windham Co.	11.70	.90	.65	f	.03
ELECTRICIANS:					
Fairfield Co.: Norwalk (E. of Five Mile River), Weston, Westport Building Construction	12.45	1.10	3%+.45	6%	½%
Fairfield Co.: Bethel, Bridgeport, Brookfield, Danbury, Easton, Fairfield, Monroe, New Fairfield, Newton, Redding,					

DECISION NO. CT80-2073

	Basic Hourly Rates	Fringe Benefits Payments			
		H & W	Pensions	Vacation	Education and/or Appr. Tr.
ELECTRICIANS (cont'd):					
Ridgefield, Shelton, Sherman, Stratford, & Trumbull; Litchfield Co.: Bridgewater & New Milford Building Construction	12.45	1.10	3%+1.05		½%
Fairfield Co.: Darien, Greenwich, New Canaan, Stamford, and that portion of Norwalk lying west of the five mile river	12.75	6%+e	6½%	10%	½%
Litchfield Co.: Plymouth Building Construction	12.50	1.07	3%+.65		½%
Windham Co.: Building Construction	13.05	1.50	3%+1.60		½%
Litchfield Co.: Rem. of Co.	11.70	1.22	3%+.60	g	1/8%
ELEVATOR CONSTRUCTORS	10.79	.895	.69	a+b+i	.025
ELEVATOR CONSTRUCTORS' HELPERS	7.55	.895	.69	a+b+i	.025
GLAZIERS:					
Fairfield Co.: Greenwich	12.20	.66	1.66	.67	.01
Fairfield Co.: Rem. of Co.; & Litchfield Co.	9.83	.95	.47	j	.01
Windham Co.	11.81	.84	.55	k	
IRONWORKERS:					
Ornamental; Reinforcing; Structural; and Precast concrete erection	14.75	1.03	1.45	1	.10
LATHERS:					
Fairfield Co.: Bridgeport, Easton, Fairfield, Monroe, Redding, Ridgefield, Shelton, Stratford, Trumbull, Weston, Westport, & Wilton	10.60	.50	.40		.01
Fairfield Co.: Greenwich, New Canaan, Norwalk & Stamford	10.01	.50	.20	.75	.01
Fairfield Co.: Bethel, Brookfield, Danbury, New Fairfield, Newton, & Sherman; Litchfield Co.:					

DECISION NO. CT80-2073

	Basic Hourly Rates	Fringe Benefits Payments			
		H & W	Pensions	Vacation	Education and/or Appr. Tr.
LATHERS: (Cont'd)					
Bethlehem, Bridgewater, Cornwall, Goshen, Harwinton, Litchfield, Morris, New Milford, N. Canaan, Plymouth, Roxbury, Thomaston, Torrington, Warren, Washington, Watertown, & Woodbury	$10.60	.50	.50		.01
Litchfield Co.: Barkhamsted, Colebrook, New Hartford, Norfolk, & Winchester; Windham Co.: Chaplin, Hampton, Scotland, & Windham	11.15	.50	.40		.01
Windham Co.: Danielson	9.99	.65	.75		.01
LINE CONSTRUCTION:					
Fairfiled Co.: Darien, Greenwich, New Canaan, Stamford, & that portion of Norwalk, W. of Five Mile River					
Railroad Construction					
Lineman	10.71	6%	9½%	10%	.02+½%
Dynamite Man	9.53	6%	9½%	10%	.02+½%
Boring Machine Operator	9.32	6%	9½%	10%	.02+½%
Compressor Operator	8.67	6%	9½%	10%	.02+½%
Driver Groundman	8.14	6%	9½%	10%	.02+½%
Groundman	7.28	6%	9½%	10%	.02+½%
Underground Railroad Construction					
Linemen	13.26	6%	9½%	10%	.02+½%
Equipment Operator	12.20	6%	9½%	10%	.02+½%
Dynamite Man & Transitman	11.80	6%	9½%	10%	.02+½%
Mechanic	11.54	6%	9½%	10%	.02+½%
Heavy Driver Groundman	10.87	6%	9½%	10%	.02+½%
Driver Groundman	10.21	6%	9½%	10%	.02+½%
Groundman	9.68	6%	9½%	10%	.02+½%
Fairfield Co.: Rem. of Co.; Litchfield Co.; & Windham Co.					

DECISION NO. CT80-2073

	Basic Hourly Rates	Fringe Benefits Payments			
		H & W	Pensions	Vacation	Education and/or Appr. Tr.
LINE CONSTRUCTION: (cont'd)					
Utility Work and Railroads					
Linemen, Cable Splicer, & Dynamite Man	12.50	.70	3%+.75	p	
Heavy Equipment Operator	11.35	.70	3%+.75	p	
Equipment Operator, Tractor Trailer Driver, Field Mechanic	10.69	.70	3%+.75	p	
Material Man	10.58	.70	3%+.75	p	
Groundman Truck Driver	9.58	.70	3%+.75	p	
Groundman, Experienced	8.59	.70	3%+.75	p	
Groundman, Inexperienced	7.64	.70	3%+.75	p	
Commercial Rates:					
Lineman	11.92	.70	3%+.75	p	
Equipment Operator	11.19	.70	3%+.75	p	
Driver Groundman	8.87	.70	3%+.75	p	
Traffic Control, Illumination & Maintenance:					
Lineman & Cable Splicer	10.48	.70	3%+.75	p	
Groundman Truck Driver	8.03	.70	3%+.75	p	
Equipment Operator	8.96	.70	3%+.75	p	
Groundman, experienced	7.20	.70	3%+.75	p	
MARBLE SETTERS' HELPERS:					
Fairfield Co.: Darien, Greenwich, Norfolk, Stamford, & Westport	8.45	1.26	1.54	1.00	
MARBLE SETTERS' HELPERS; Terrazzo Workers' Helpers; & Tile Setters					
Fairfield Co.: Rem. of Co.: Litchfield Co.; Windham Co.	8.75	.50	.65		
PAINTERS:					
Bridge:					
Structural Steel	14.20				
Spray	17.70				
Sandblasting or Power Tools	15.20				
Fairfield Co.: Greenwich					
Brush; Structural Steel; Paperhangers; Tapers	11.00	.20	.75	.30	
Spray	16.50	.20	.75	.30	

DECISION NO. CT80-2073

	Basic Hourly Rates	Fringe Benefits Payments			
		H & W	Pensions	Vacation	Education and/or Appr. Tr.
PAINTERS: (cont'd)					
Fairfield Co.: Bridgeport, Easton, Fairfield, Southport, Stratford, and Trumbull					
Brush	$10.55	.50	.65	r	
Spray	13.05	.50	.65	r	
Taper	11.05	.50	.65	r	
Fairfield Co.: Darien, Stamford, New Canaan, Norwalk, Weston, Westport, & Wilton					
Brush	10.80	.50	.75	.30	.01
Roller, Paperhangers, Tapers, Epoxy	11.30	.50	.75	.30	.01
Spray	14.00	.50	.75	.30	.01
Fairfield Co.: Bethel, Brookfield, Danbury, New Fairfield, Newton, Redding, Ridgefield, Sandy Hook, & Sherman; Litchfield Co.: New Milford					
Brush	11.60	.50	.50	r	
Steel	12.90	.50	.50	r	
Paperhangers; Tapers	11.60	.50	.50	r	
Epoxy	14.00	.50	.50	r	
Residential	9.85	.50	.50	r	
Spray	17.40	.50	.50	r	
Fairfield Co.: Byram					
Brush	10.65	.65	1.13	.50	.05
Spray	11.65	.65	1.13	.50	.05
Steel & Swing Stage & Boatswain Chair	12.175	.65	1.13	.50	.05
Drywall Taper	11.45	.65	1.13	.50	.05
Fairfield Co.: Monroe & Shelton					
Brush	12.25	.50	1.00	s	.01
Hand Roller; Paperhangers	12.75	.50	1.00	s	.01
Structural Steel, epoxy, polyester	13.25	.50	1.00	s	.01
Spray	16.25	.50	1.00	s	.01

DECISION NO. CT80-2073

	Basic Hourly Rates	Fringe Benefits Payments			
		H & W	Pensions	Vacation	Education and/or Appr. Tr.
PAINTERS: (cont'd)					
Windham Co.: Willimantic & Windham					
Brush; Tapers	$11.00	.60	.70		.01
Paperhangers	11.50	.60	.70		.01
Riding Steel; Steamcleaning; Sandblasting; Tanks; Towers; & Hazardous Work	11.58	.60	.70		.01
Spray	14.00	.60	.70		.01
Litchfield Co.: Bantam, Barkhamsted, Canaan, Colebrook, Cornwall, Goshen, Harwinton, Kent, Litchfield, New Hartford, New Field, N. Canaan, Plymouth, Salisbury, Sharon, Terryville, Torrington, Warren, Winchester, & Winsted					
Brush; Roller; Taping	10.85	1.10	.80		
Spray; High	13.50	1.10	.80		
Epoxy	10.45	1.10	.80		
Paperhanging	11.35	1.10	.80		
Windham Co., except Willimantic & Windham					
Brush	11.11	.50	.70		.01
Paperhangers	12.06	.50	.70		.01
Sign	12.06	.50	.70		.01
Taping	12.06	.50	.70		.01
Roller	11.61	.50	.70		.01
Structural Steel	11.91	.50	.70		.01
Spraying oil paint	14.26	.50	.70		.01
Spraying epoxy	16.79	.50	.70		.01
PLUMBERS:					
Windham Co.: Windham	12.26	1.10	1.39		.15
PLUMBERS: STEAMFITTERS:					
Fairfield Co.: Greenwich	11.43	75	.80	.91	.06
Fairfield Co.: Bridgeport, Easton, Fairfield, Monroe, Shelton, Stratford, & Trumbull	11.54	.75	.70	4%	.01
Fairfield Co.: Georgetown, Norwalk, S. Norwalk, Weston, Westport, & Wilton	11.40	.75	.80	.36	.02

DECISION NO. CT80-2073

	Basic Hourly Rates	Fringe Benefits Payments			
		H & W	Pensions	Vacation	Education and/or Appr. Tr.
PLUMBERS; STEAMFITTERS (Cont'd)					
Fairfield Co.: Bethel, Brookfield, Danbury, New Fairfield, Newton, Redding Ridgefield, & Sherman; Litchfield Co.: Bridgewater & New Milford	13.40	.75	.80	.70	.02
Fairfield Co.: Darien, New Canaan & Stamford	11.75	.75	.80	4%	.02
Litchfield Co.: Bantam, Barkhamsted, Canaan, Colebrook, Cornwall, Falls Village, Goshen, Harwinton, Kent, Lakeville, Litchfield, Morris, New Hartford, Norfolk, N. Canaan, Salisbury, Sharon, Torrington, Warren, Winchester, & Winstead	11.60	.75+.13	.70	t	.05
Litchfield Co.: Bethlehem, New Preston, Plymouth (incl. Terryville), Roxbury, Thomaston, Washington, Watertown, & Woodsbury	11.60	.75+.13	.70	t	.05
Windham Co., except Windham	14.77	.80	1.00	u	.10
ROOFERS:					
Fairfield Co.; Litchfield Co.: Bethlehem, Bridgewater, Kent, New Milford, Roxbury, Washington, & Woodbury	12.65	1.35	.50		
Litchfield Co.: Bantam, Canaan, Colebrook, Cornwall, Cornwall Bridge, E. Canaan, Falls Village, Gaylordsville, Goshen Lakeside, Litchfield, Marbledale, Morris, New Hartford, New Preston, Norfolk, Northfield, Oakville, Prequabuch, Pine meadow, Pleasant Valley,					

DECISION NO. CT80-2073

	Basic Hourly Rates	Fringe Benefits Payments			
		H & W	Pensions	Vacation	Education and/or Appr. Tr.
ROOFERS: (cont'd)					
Plymouth, Riverton, Salisbury, Sharon, S. Kent, Taconic, Terryville, Thomaston, Torrington, Washington Depot, Watertown, W. Cornwall, W. Goshen, Winchester Center, & Winsted;					
Windham Co.					
Composition	11.45	.575	.85	.55	
Slate & Tile	9.80	.575	.85	.55	
SHEET METAL WORKERS:					
Fairfield Co.; Litchfield Co.;	11.50	1.28	1.04		.02
Windham Co.	11.30	.70	.86		.05
SPRINKLER FITTERS	12.15	.75	1.05		.08
STEAMFITTERS:					
Windham Co.: Windham	10.77	1.36	1.31		.13
TILE SETTERS' HELPERS:					
Fairfield Co.: Darien, Greenwich, Stamford, Norfolk, & Westport	7.90	.50	1.27		

DECISION NO. CT80-2073

PAID HOLIDAYS:
A-New Year's Day; B-Memorial Day; C-Independence Day; D-Labor Day; E-Thanksgiving Day; F-Christmas Day.

FOOTNOTES:

a. 7 paid holidays: A, C, D, E, F, Decoration Day & Good Friday.
b. 1 paid holiday: Good Friday. Employee must work 3 days during the work week in which the holiday falls, if scheduled, and if scheduled, the working day before and the working day after the holiday
c. 4 paid holidays: B, C, D, and Good Friday. Employee must be employed 14 consecutive days immediately, prior to the holiday.
d. 3 paid holidays: C, D, and E.
e. $7.50 per day
f. 3 paid holidays: B, C, and D.
g. The last 4 regular working hours prior to Christmas shall be paid half day.
h. 6 paid holidays: A through F
i. Employer contributes 8% of basic hourly rate for 5 years or more of service or 6% basic hourly rate for 6 months to 5 years of service as vacation pay credit.
j. 9 paid holidays: A through F, Washington's Birthday, Good Friday, and Columbus Day.
k. 9 paid holidays: A through F, Washington's Birthday, Good Friday, and Columbus Day.
l. The last 4 hours on Christmas Eve is a paid half day, if employee has worked 5 consecutive days prior to Christmas Eve.
m. 9 paid holidays: A through F, Washington's Birthday, Good Friday, and Christmas Eve provided the employee has worked 45 full days for the employer during the 120 days prior to the holiday and is available for work the day preceding and following the holiday.
n. 1% of the gross electrical labor payroll.
o. Employer contributes $1.50 per day to a supplemental unemployment fund.
p. 9 paid holidays: A through F, Washington's Birthday, Good Friday, and a floating holiday per year provided the employee has been employed for a period of 5 working days prior to the holidays and works the scheduled work days immediately preceding and following the holidays.
q. 1 paid holiday: ½ day pay on Labor Day.
r. 2 paid holidays: C and D providing the employee works the day before and the day after the holiday.
s. 4 paid holidays: B, C, D, and E providing the employee works the day before and the day after the holiday
t. 2 paid holidays: B and D and half day paid holiday the Friday after Thanksgiving and the last working day before Christmas and Good Friday paid half day.
u. 1 paid holiday: D and four hours for the day after Thanksgiving
v. Employer contributes $100.00 per year to the apprenticeship and training fund
y. 3% of gross earnings to SASMI

DECISION NO. CT80-2073

	Basic Hourly Rates	Fringe Benefits Payments			
		H & W	Pensions	Vacation	Education and/or Appr. Tr.
POWER EQUIPMENT OPERATORS (Building Construction)					
Derrick; Hoisting engineer 2 drums and over; Hoisting structural steel; Pile driver & Setting Stone	$13.67	1.10	1.10	a	.15
Dragline; Forklift - over 5' lift; Front end loader - 7 cy. or over; Gradall; Hoisting engineer (all types of equipment where a drum and cable are used to hoist, pull, motive power or operation); Koehring scooper loader and/or hoe; master mechanic; shovel; & tower crane	13.53	1.10	1.10	a	.15
Maintenance engineer	13.41	1.10	1.10	a	.15
Central mix operator; Coleman loader and screening plant or similar equipment; combination hoe and loader over ½ yd; Conveyors - regardless of motive power; Front end loader 3 cy. up to 7 cy.; Joy drill limited to joy heavy weight champion or equivalent; Mucking machine; Post hole digger; pumpcrete machine; rock boring machine; vibratory hammer; welder & well digger	13.09	1.10	1.10	a	.15
Asphalt Spreader	12.83	1.10	1.10	a	.15
Bulldozer; Carry-all Operators; Grader; & Scraper pan	12.75	1.10	1.10	a	.15

DECISION NO. CT80-2073

	Basic Hourly Rates	Fringe Benefits Payments			
		H & W	Pensions	Vacation	Education and/or Appr. Tr.
POWER EQUIPMENT OPERATORS (cont'd)					
Combination hoe and loader machine; concrete mixer - 5 bags and over; Front end loader under 3 cy.; powerstone spreader	$12.69	1.10	1.10	a	.15
Air and steam valve	11.78	1.10	1.10	a	.15
Compressor; generator; pump and well point; welding machine	11.65	1.10	1.10	a	.15
Fork lift not over 4'; & Steam Jenny	12.56	1.10	1.10	a	.15
Mechanical Heater	11.46	1.10	1.10	a	.15
Roller	12.43	1.10	1.10	a	.15
Dinky machine; power pavement breaker	12.23	1.10	1.10	a	.15
Fireman (High Pressure)	11.20	1.10	1.10	a	.15
Oiler	10.62	1.10	1.10	a	.15
Crane with boom, excluding jib, over 150' - $.25 extra.					
Crane with boom, excluding jib over 200' - $.50 extra					
LABORERS (Heavy and Highway Construction):					
Laborers	8.65	.60	.80		.10
Acetylene burners; Asphalt raker; Chain saw operator; Concrete & power buggy operators; Concrete saw operators; fence & guard rail erectors; form setters; hand operated concrete vibrator operators; hand operated vibratory compactor operators; Mason tenders; pipelayers; pneumatic gas & electric drill operators; powdermen & wagon drill operators	8.90	.60	.80		.10

DECISION NO. CT80-2073

	Basic Hourly Rates	Fringe Benefits Payments			
		H & W	Pensions	Vacation	Education and/or Appr. Tr.
LABORERS: (cont'd)					
Air track operators; block paver; curb setters	9.15	.60	.80		.10
Blasters	9.40	.60	.80		.10
LABORERS (Building Construction):					
Laborer	8.65	.60	.80		.10
Asphalt rakers, concrete & power buggy ops, concrete saw ops, chain saw ops, fence & guard rail erectors, form setters, pipelayers, dry stone wall builders, mason tenders, pneumatic drill ops, pneumatic gas & electric drill ops, powdermen & wagon drill operators and Precast erectors	8.90	.60	.80		.10
Air track operators, block pavers; and curb setters, sandblasters, wagon drill operators	9.15	.60	.80		.10
Open air caisson, cylindrical work and boring crew:					
Top man	8.65	.60	.80		.10
Bottom man	9.15	.60	.80		.10

DECISION NO. CT80-2073

	Basic Hourly Rates	Fringe Benefits Payments			
		H & W	Pensions	Vacation	Education and/or Appr. Tr.
POWER EQUIPMENT OPERATORS: (Heavy and Highway)					
CLASS 1	$13.70	1.10	1.10	a	.15
CLASS 2	13.51	1.10	1.10	a	.15
CLASS 3	13.11	1.10	1.10	a	.15
CLASS 4	12.87	1.10	1.10	a	.15
CLASS 5	12.68	1.10	1.10	a	.15
CLASS 6	12.45	1.10	1.10	a	.15
CLASS 7	12.19	1.10	1.10	a	.15
CLASS 8	11.09	1.10	1.10	a	.15
CLASS 9	11.22	1.10	1.10	a	.15
CLASS 10	11.66	1.10	1.10	a	.15
CLASS 11	12.10	1.10	1.10	a	.15
CLASS 12	10.65	1.10	1.10	a	.15
CLASS 13	11.58	1.10	1.10	a	.15
CLASS 14	7.05	1.10	1.10	a	.15
Crane with 150' boom - $.25 extra					
Crane with 200' boom - $.50 extra					

CLASSIFICATIONS: POWER EQUIPMENT OPERATORS

CLASS 1: Erecting and handling structural steel; front end loader (7 cy. or over).
CLASS 2: Piledriver; Power shovel and crane; Dragline; Gradall; Trenching machine; lighter derrick; paver (concrete); derrick (stiff leg and guy); steel pile sheeting; koehring loader (scooper) master machine
CLASS 3: Drill (joy heavy weight champion or equivalent); side boom; loader (euclid); mucking machine; pumpcrete; rock and earth boring machine; Post hole digger; well digger; & hammer (vibratory); central mix; combination hoe & loader (over ¼ yd.)
CLASS 4: Asphalt spreader
CLASS 5: Front end loader (3 yds. or over); Grader; power stone spreader; combination hoe and loader.
CLASS 6: Asphalt roller; bulldozer; carryall; maintenance engineer; concrete mixer (5 bags and over); Welder
CLASS 7: Front end loader (under 3 yds.); roller; power chipper; fork lift; finishing machine; asphalt plant; power pavement breaker; dinky machine

DECISION NO. CT80-2073

CLASSIFICATIONS: POWER EQUIPMENT OPERATORS

CLASS 8: Compressor; pump
CLASS 9: Firemen (high pressure)
CLASS 10: Well point system
CLASS 11: Compressor battery
CLASS 12: Oiler
CLASS 13: Batch plant; bulk cement plant
CLASS 14: Track backhoe oiler

	Basic Hourly Rates	Fringe Benefits Payments			
		H & W	Pensions	Vacation	Education and/or Appr. Tr.
POWER EQUIPMENT OPERATORS: Survey Crew					
Chief of Party	$11.65	1.10	1.10	a	.15
Ass't Chief of Party	10.81	1.10	1.10	a	.15
Instrument Man	9.97	1.10	1.10	a	.15
Rodman & Chainman	7.43	1.10	1.10	a	.15
TRUCK DRIVERS (Building, Heavy, and Highway Construction)					
CLASS 1	9.26	1.04	1.10	a	
CLASS 2	9.36	1.04	1.10	a	
CLASS 3	9.46	1.04	1.10	a	
CLASS 4	9.41	1.04	1.10	a	
CLASS 5	9.51	1.04	1.10	a	
CLASS 6	9.56	1.04	1.10	a	

CLASSIFICATIONS: TRUCK DRIVERS

CLASS 1: Two axle trucks; helpers
CLASS 2: Three axle trucks; two axle ready mix
CLASS 3: Four axle trucks; heavy duty trailer-up to 40 tons
CLASS 4: Three axle ready-mix
CLASS 5: Four axle ready-mix; specialized earth moving equipment other than conventional type on-the-road trucks and semi-trailer (including Euclids)
CLASS 6: Heavy duty trailer-40 tons and over

PAID HOLIDAYS:
A-New Year's Day; B-Memorial Day; C-Independence Day; D-Labor Day; E-Thanksgiving Day & F-Christmas Day

FOOTNOTE:
a. 7 paid holidays: A through F and Good Friday

STATE: Connecticut COUNTIES: See Below
DECISION NUMBER: CT80-2074 DATE: Date of Publication
Supersedes Decision CT79-2011 dated April 6, 1979 in 44 FR 20921
DESCRIPTION OF WORK: Building Construction (excluding single family homes and garden type apartments up to and including 4 stories), heavy (excluding tunnel construction) and highway construction.

DECISION NO. CT80-2074

*Hartford, Middlesex, New Haven, New London, and Tolland Counties	Basic Hourly Rates	Fringe Benefits Payments			
		H & W	Pensions	Vacation	Education and/or Appr. Tr.
ASBESTOS WORKERS: Hartford Co.: Avon, Berlin, Bloomfield, Bristol, Burlington, Canton, E. Hartford, W. Windsor, Farmington, Glastonbury, Hartford, Manchester, Marlborough, New Britain, Newington, Plainville, Rocky Hill, Simsbury, Southington, S. Windsor, W. Hartford, Wethersfield & Windsor; Middlesex Co.; New Haven Co.; New London Co.: Bozrah, Colchester, E. Lyme, Franklin, Groton, Lebanon, Lyme, Montville, New London, Norwich, Old Lume Salem, Sprague, & Waterford; & Tolland Co.: Andover, Bolton, Columbia Coventry, Ellington, Hebron, Mansfield, Tolland, Vernon, & Willington	$14.04	.85	1.46		
Harford Co.: E. Granby, Enfield, Granby, Hartland, Suffield, & Windsor Locks; Tolland Co.: Somers, Stafford, & Union	11.95	1.04	1.40		.01
New London Co.: Griswold, Ledyard, Lisbon, N. Stonington, Preston, Stonington, & Voluntown	12.18	1.45	1.33		
BOILERMAKERS	13.50	1.175	1.35		.03
BRICKLAYERS: Cement Masons; Finishers; Marble masons; Plasterers; Stonemasons; Terrazzo workers, & Tile setters (Building Construction):					

BRICKLAYERS (Building Construction) (cont'd):	Basic Hourly Rates	Fringe Benefits Payments			
		H & W	Pensions	Vacation	Education and/or Appr. Tr.
Hartford Co.: Avon, Bloomfield, Burlington, Enfield, E. Granby, E. Hartford, Farmington, Glastonbury, Granby, Hartford, Hartland, Manchester, Marlborough, Rock Hill, Simsbury, S. Windsor, Suffield, Thompsonville, W. Hartford, Wethersfield, Windsor, Windsor Locks, Tolland Co.: Andover, Bolton, Columbia, Coventry, Ellington, Hebron, Mansfield, Somers, Stafford, Storrs, Tolland, Union, Vernon, & Willington	11.05	.75	.75		
Hartford Co.: Berlin, New Britain, Newington, & Southington; New Haven Co.: Meriden, Wallingford, Cheshire (North of Route 68)	10.98	.75	.75		
Hartford Co.: Canton	10.85	.75	.75		
Middlesex Co.: & New London Co.	11.05	.75	.75		
New Haven Co.: Bethany, Branford, E. Haven Guilford, Hamden, Madison, New Haven, N. Brandford, N. Haven, Orange, W. Haven, Woodbridge, Rem. of Milford & Cheshire	11.05	.75	.75		
New Haven Co.: Ansonia, Derby, Oxford, Seymour, & Southbury	10.80	.75	.75		
Hartford Co.: Bristol, & Plainville, New Haven Co.: Beacon Falls, Middlebury, Mixville, Naugatuck, Prospect, Waterbury, & Wolcott	10.90	.75	.75		

Page 3

DECISION NO. CT80-2074

	Basic Hourly Rates	Fringe Benefits Payments			
		H & W	Pensions	Vacation	Education and/or Appr. Tr.
BRICKLAYERS (Building Construction) (cont'd): New Haven Co.: Milford (West of Indian River to the Orange Town line)	$10.98	.75	.75		
BRICKLAYERS (Heavy and Highway Construction)	10.90	.80	.75	b	
CARPENTERS: MILLWRIGHTS; PILEDRIVERMEN, RESILIENT FLOOR LAYERS (Building Construction) Hartford Co.: Hartford, West Hartford, Avon, Farmington, Simsbury, Bloomfield, Windsor, East Granby, Granby, Windsor Locks, Suffield, Enfield, East Windsor, South Windsor, East Hartford, Manchester, Glastonbury, Rocky Hill, Wethersfield, Hartland, Tolland Co.: Stafford, Somers, Tolland, Ellington, Bolton, Vernon	11.85	.90	.65		.10
Hartford Co.: New Britain, Newington, Berlin, Southington, Plainville, Burlington, Canton, Bristol; New Haven Co.: Meriden, Wallingford, New Haven, East Haven, Branford, Guilford, Madison, North Branford, North Haven, Hamden, West Haven, Orange (east of Orange Center Road and North of Route 1; also North of Route 1 and east of the Oyster River), Cheshire, Waterbury, Wolcott, Middlebury, Southbury, Naugatuck, Prospect, Bethany, Beacon Falls, Woodbridge, Middlesex Co.	12.00	.90	.65		.05

Page 4

DECISION NO. CT80-2074

	Basic Hourly Rates	Fringe Benefits Payments			
		H & W	Pensions	Vacation	Education and/or Appr. Tr.
CARPENTERS (Building Construction) (cont'd) New Haven Co.: Milford, Oxford, Derby, Seymour, Ansonia, Orange (that part south of Route 1 and West of the Oyster River	$12.00	.90	.65	c	e
New London Co.: Tolland Co.: Mansfield, Union, Willington, Coventry, Hebron, Columbia, Andover	12.00	.90	.65		.03
CARPENTERS (Heavy & Highway Construction): New Haven Co.: Ansonia, Derby, Milford, Orange (W. of Orange Center Road & S. of Rt #1 & W. of the Oyster River), Oxford, & Seymour	11.70	.90	.65	f	e
Hartford Co.: Bloomfield, E. Hartford, Elmwood, Enfield, Gastonbury, Granby, Manchester, Newington, Rocky Hill, Wethersfield, Windsor; Tolland Co.: Bolton, Ellington, Somers, Stafford, Tolland, & Vernon	11.45	.90	.65	f	.10
New London Co.: Tolland Co.: Andover, Columbia, Coventry, Hebron, Mansfield, Union, & Willington	11.70	.90	.65	f	.03
ELECTRICIANS: New Haven Co.: Milford	12.45	1.10	3%+1.05		½%
Hartford Co.: Berlin, Bristol, New Britain, Newington, Plainville, & Southington	12.95	1.07	3%+.65		½%
Hartford Co.: Suffield, & Enfield (portion of Thompsonville West of George Washington Road & North of Hazard Ave)	12.28	.85	3%+.40	h	.03

DECISION NO. CT80-2074

	Basic Hourly Rates	Fringe Benefits Payments			
		H & W	Pensions	Vacation	Education and/or Appr. Tr.
ELECTRICIANS (cont'd):					
Hartford Co.: Hartland; New Haven Co.: Beacon Falls, Middlebury, Naugatuck, Oxford, Prospect, Seymour, Southbury, Waterbury, & Wolcott	$11.70	1.22	3%+.60	h	1/8%
Hartford Co: Rem. of Co.; Middlesex Co.: Cromwell, Middlefield, Middletown, & Portland; New London Co.: Bozrah, Colchester, Franklin, Lisbon, Montville, N. Stonington, Norwich, Griswold, Lebanon, Ledyard (except Submarine Base), Preston, Salem, Sprague, Stonington, Voluntown, & Tolland Co.	13.05	1.50	3%+1.60		½%
Middlesex Co.: Rem. of Hartford Co.; Berlin, Bristol, New Britain, Newington, Plainville, Southington, New Haven Co.: Rem. of Co.; New London Co.: Fishers Island, Sound Old Lyme, Groton, Waterford, & Ledyard (Submarine Base Only)	12.95	1.07	3%+.65		½%
ELEVATOR CONSTRUCTORS	10.79	.895	.56	a+b+j	.025
ELEVATOR CONSTRUCTORS' HELPERS	7.55	.895	.56	a+b+j	.025
GLAZIERS:					
New Haven Co., Except Wallingford	9.83	.95	.47	k	.01
Hartford Co.; Middlesex Co.; New Haven, Wallingford; New London Co.; & Tolland Co.	11.81	.84	.55	l	
IRONWORKERS:					
Ornamental; Reinforcing; Structural & Precast concrete erection	14.75	1.03	1.45	m	.10

DECISION NO. CT80-2074

	Basic Hourly Rates	Fringe Benefits Payments			
		H & W	Pensions	Vacation	Education and/or Appr. Tr.
LATHERS:					
Hartford Co.: Bristol, Southington, New Haven, Cheshire, Meriden, Middlebury, Naugatuck, Oxford, Prospect, Southbury, Waterbury, & Wolcott	$10.60	.50	.50		.01
Hartford Co.: Avon, Berlin, Bloomfield, Burlington, Canton, E. Granby, E. Hartford, Farmington, Glastonbury, Granby, Hartford, Manchester, Marlborough, New Britain, Newington, Plainville, Rocky Hill, Simsbury, S. Windsor, W. Hartford, Windsor, & Windsor Locks; Middlesex Co.: Cromwell, E. Haddam, E. Hampton, Middlefield, Middletown, & Portland; New London Co.: Bozrah, Colchester, E. Lyme, Franklin, Grofton, Lebanon, Lisbon, Lyme, Salem, Sprague, & Waterford; Tolland Co.: Andover, Bolton, Columbia, Coventry, Hebron, Mansfield, & Vernon	9.90	.50	.30		.01
Hartford Co.: Broad Brock, Enfield, Hazardville, Melrose, Suffield, Thompsonville, & Warehouse Point; Tolland Co.: Crystal Lake, N. Somers, Somers, Stafford, Stafford Springs, Strafford-ville, & Union	10.85		.25		.01
Middlesex Co.: Chester, Clinton, Deep River, Durham, Essex, Haddam,					

DECISION NO. CT80-2074

	Basic Hourly Rates	Fringe Benefits Payments			
		H & W	Pensions	Vacation	Education and/or Appr. Tr.
LATHERS (cont'd):					
Killingworth, Old Saybrook, & Westbrook; New Haven Co.: Ansonia, Branford, Derby, E. Haven, Guilford, Hamden, Madison, Milford, New Haven, N. Branford, N. Haven, Orange, Seymour, Wallingford, W. Haven, & Woodbridge	$10.00	.75	.50		.01
LINE CONSTRUCTION:					
Linemen	11.92	.70	3%+.75	o	
Equipment Operators	11.19	.70	3%+.75	o	
Driver Groundman	8.87	.70	3%+.75	o	
MARBLE SETTERS' HELPERS; Terrazzo workers' helpers; & Tile Setters' Helpers	8.75	.50	.65		
PAINTERS:					
Bridge; Structural Steel	14.20				
Sandblasting or power tools	15.20				
Spray	17.70				
New Haven Co.: Milford (up to Gulf Street)					
Brush	10.55	.50	.65	p	
Taping	11.05	.50	.65	p	
Spray	13.05	.50	.65	p	
Hartford Co.: Avon Bloomfield, Broad Brook, Canton, E. Granby, E. Hartford, E. Windsor, Enfield, Farmington, Glastonbury, Granby, Hartford, Manchester, Marlborough, Rocky Hill, Poquonock, Sinsbury, S. Windsor, Suffield, S. Manchester, W. Hartford, W. Simsbury, Wethersfield, Windsor, & Windsor Locks; Tolland Co.: Andover, Ashford, Bolton, Columbia, Coventry, Ellington, Hebron,					

DECISION NO. CT80-2074

	Basic Hourly Rates	Fringe Benefits Payments			
		H & W	Pensions	Vacation	Education and/or Appr. Tr.
PAINTERS (cont'd):					
Mansfield, Rockville, Strafford, Somers, Tolland, Union, Vernon, & Willington					
Brush; Tapers	$11.00	1.20	1.10		
Paperhangers	11.50	1.20	1.10		
Riding Steel; Steam-cleaning; Sandblasting; Tank; Towers; & Hazardous Work	11.58	.95	.70		
Spray	14.00	.95	.70		
Hartford Co.: Berlin, Bristol, E. Berlin, Forestville, Hartland, Kensington, Milldale, New Britain, Plainville, Plantsville, Southington, & Unionville; New Haven Co.: Cheshire, Guilford, Madison, Meriden, & Wallingford; Middlesex Co.: Chester, Clinton, Cromwell, Deep River, Durham, E. Haddam, E. Hampton, Essex, Haddam, Higganum, Ivoryton, Killingworth, Middlefield, Middletown, Moodus, Norfolk, Portland, Saybrook, & Westbrook					
Brush, Roller; Taping	10.85	1.10	.80		
Spray	13.50	1.10	.80		
Epoxy	10.45	1.10	.80		
Paperhanging	11.35	1.10	.80		
Work over 60' & Boatswain chair; Open Steel	16.28	.80	.45		
Swing Stage 40 - 60'	11.85	.80	.45		
New Haven Co.: Ansonia, Beacon Falls, Derby, Oxford, & Seymour					
Brush	12.25	.50	1.00	q	.01
Hand roller; Paperhangers	12.75	.50	1.00	q	.01

DECISION NO. CT80-2074

	Basic Hourly Rates	Fringe Benefits Payments			
		H & W	Pensions	Vacation	Education and/or Appr. Tr.
PAINTERS (cont'd):					
Structural Steel, epoxy polyester	$13.25	.50	1.00	q	.01
Spray	16.25	.50	1.00	q	.01
New Haven Co.: Bethany, Branford, E. Haven, Hamden, Milford, (S. on Gulf Street & N. on North Street), New Haven, Orange, W. Haven, Woodbridge, & Woodmont					
Brush; Sandblastong	10.70	.50	.60		.02
Tapers	11.05	.50	.60		.02
Paperhangers	11.20	.50	.60		.02
Spray	13.25	.50	.60		.02
Structural Steel	11.20	.50	.60		.02
New Haven Co.: Middlebury Naugatuck, Prospect, Roxbury, Southbury, Thomaston, Washington, Waterbury, Watertown, Wolcott, & Woodbury					
Brush	9.20	.50	.70		
Paperhangers & Tapers	9.45	.50	.70		
Spray	14.18	.50	.70		
New London Co.: Colchester, E. Lyme, Montville, New London, Norwich, Stonington					
Brush	11.11	.60	.70		.01
Paperhangers	12.06	.60	.70		.01
Sign	12.06	.60	.70		.01
Taping	12.06	.60	.70		.01
Roller	11.61	.60	.70		.01
Structural Steel	11.91	.60	.70		.01
Spraying oil paint	14.26	.60	.70		.01
Spraying epoxy	16.79	.60	.70		.01
PLUMBERS:					
Hartford Co.: Avon, Bloomfield, Burlington, Canton, E. Granby, E. Hartford, E. Windsor, E. Enfield, Farmington, Glastonbury, Granby,					

DECISION NO. CT80-2074

	Basic Hourly Rates	Fringe Benefits Payments			
		H & W	Pensions	Vacation	Education and/or Appr. Tr.
PLUMBERS (cont'd):					
Hartford, Manchester, Marlborough, Newington, Rocky Hill, Simsbury, S. Windsor, Suffield, W. Hartford, Wethersfield, Windsor, Windsor Locks, Middlesex Co.: Chester, Cromwell, Deep River, E. Haddam, E. Hampton, Haddam, Maromas (Atomic River Project), Middlefield, Middletown, & Portland; Tolland Co.: Andover, Bolton, Columbia, Coventry, Ellington, Hebron, Mansfield, Somers, Strafford, Storrs, Tolland, Union Vernon, & Wellington					
Brush, Tapers	$11.00	1.20	1.10		
Paperhangers	11.50	1.20	1.10		
Spray	14.00	1.20	1.10		
Hazardous work	11.58	1.20	1.10		
PLUMBERS & STEAMFITTERS					
New Haven Co.: Milford	11.74	.75	.70	.46	.01
Hartford Co.: Southington; Middlesex Co.: Durham; New Haven Co.: Cheshire, Meriden, & Wallingford	12.85	.75	.80	r	.03
Hartford Co.: Berlin, Bristol, E. Berlin, Kensington, New Britain, Newington, & Plainville	11.03	.75	.70	s	.03
Middlesex Co.: Clinton, Killingworth, S. Westbrook; New Haven Co.: Branford, Derby, E. Haven, Orange, W. Haven, & Woodbridge	11.70	.75	.70	t	.02
Middlesex Co.: Essex, Ivoryton, Old Saybrook, & Saybrook; New London Co.: Bozrah, Colchester,					

DECISION NO. CT80-2074

	Basic Hourly Rates	Fringe Benefits Payments			
		H & W	Pensions	Vacation	Education and/or Appr. Tr.
PLUMBERS & STEAMFITTERS (cont'd)					
E. Lyme, Montville, New London, N. Stonington, Norwich, Old Lyme, Preston, Salem, Sprague, Stonington, Voluntown, & Waterford	$14.77	.80	1.00	u	.05
New Haven Co.: Ansonia, Beacon Falls, Bethany, Naugatuck, Oxford, Prospect, & Seymour; New Haven Co.: Middlebury, Southbury, S. Britain, Waterbury, & Wolcott	11.60	.88	.70	v	.05
Hartford Co.: Hartland	11.60	.88	.70	v	.05
ROOFERS:					
New Haven Co.: Ansonia, Beacon Falls, Bethany, Brandford, Derby, E. Haven, Guilford, Hamden, Madison, Milford, Middlebury, Naugatuck, New Haven, N. Branford, N. Haven, Orange, Oxford, Seymour, Union City, W. Haven, & Woodbridge	12.65	1.35	.50		
Hartford Co.; Middlesex Co.; New Haven Co.: Cheshire, Meriden, Prospect, Wallingford, & Wolcott; New London Co.; & Tolland Co.					
Composition	11.45	.575	.85	.55	
Slate, Tile	10.95	.575	.85	.55	
SHEET METAL WORKERS	12.05	.70	.86		.05
SPRINKLER FITTERS	12.15	.75	1.05		.08
STEAMFITTERS:					
Hartford Co.: Avon, Bloomfield, Burlington, Canton, E. Granby, E. Hartford, E. Windsor, Enfield, Farmington, Glastonbury, Granby, Hartford, Manchester, Marlborough, Newington,					

DECISION NO. CT80-2074

	Basic Hourly Rates	Fringe Benefits Payments			
		H & W	Pensions	Vacation	Education and/or Appr. Tr.
STEAMFITTERS (cont'd): Rocky Hill, Simsbury, S. Windsor, Suffield, W. Hartford, Wethersfield, Windsor, & Windsor Locks; Middlesex Co.: Chester, Cromwell, Deep River, E. Haddam, Hampton, Haddam, Maromas (Atomic River Project), Middlefield, Middletown, & Portland; Tolland Co.: Andover, Bolton, Columbia, Coventry, Ellington, Hebron, Mansfield, Somers, Stafford, Storrs, Tolland, Union, Vernon, & Wellington	$11.57	1.36	1.31		.13

DECISION NO. CT80-2073

PAID HOLIDAYS:
A-New Year's Day; B-Memorial Day; C-Independence Day; D-Labor Day; E-Thanksgiving Day; F-Christmas Day.

FOOTNOTES:

a. 7 paid holidays A through F, and Good Friday
b. 1 paid holiday: Good Friday. Employee must work 3 days during the work week in which the holiday falls, if scheduled, and if scheduled, the working day before and the working day after the holiday
c. 4 paid holidays: B, C, D, and Good Friday. Employee must be employed 14 consecutive days immediately, prior to the holiday.
d. 3 paid holidays: C, D, and E.
e. $100.00 per year
f. 3 paid holidays: B, C, and D.
h. The last 4 regular working hours prior to Christmas shall be a paid half day.
i. 6 paid holidays: A through F
j. Employer contributes 8% of basic hourly rate for 5 years or more of service or 6% basic hourly rate for 6 months to 5 years of service as vacation pay credit.
k. 9 paid holidays: A through F, Washington's Birthday, Good Friday, and Columbus Day.
l. 9 paid holidays: A through F, Washington's Birthday, Good Friday, and Columbus Day.
m. The last 4 hours on Christmas Eve is a paid half day, if employee has worked 5 consecutive days prior to Christmas Eve.
n. 9 paid holidays: A through F, Washington's Birthday, Good Friday, and Christmas Eve provided the employee has worked 45 full days for the employer during the 120 days prior to the holiday and is available for work the day preceding and following the holiday.
o. 9 paid holidays: A through F, Washington's Birthday, Good Friday, and a floating holiday per year provided the employee has been employed for a period of 5 working days prior to the holidays and works the scheduled work days immediately preceding and following the holidays.
p. 2 paid holidays: C and D providing the employee works the day before and the day after the holiday.
q. 4 paid holidays: B, C, D, and E providing the employee works the day before and the day after the holiday
r. 1 paid holiday: D
s. Paid holidays: D, and the Friday after Thanksgiving is a paid half day, and December 24, provided it falls on a working day, is a paid half day
t. 3½ paid holidays: C, D, E, and the half day Friday after Thanksgiving
u. 1 paid holiday: D
v. 2 paid holidays: B, D, & half day paid holiday the Friday after Thanksgiving, and the last working day before Christmas, & Good Friday paid half day

DECISION NO. CT80-2074

	Basic Hourly Rates	Fringe Benefits Payments			
		H & W	Pensions	Vacation	Education and/or Appr. Tr.
POWER EQUIPMENT OPERATORS (Building Construction)					
Derrick; Hoisting engineer 2 drums and over; Hoisting structural steel; Pile driver & Setting Stone	$13.67	1.10	1.10		.15
Dragline; Forklift - over 5' lift; Front end loader - 7 cy. or over; Gradall; Hoisting engineer (all types of equipment where a drum and cable are used to hoist, pull, motive power or operation); Koehring scooper loader and/or hoe; master mechanic; shovel; & tower crane	13.53	1.05	.95		.15
Maintenance engineer	13.41	1.05	.95		.15
Central mix operator; Coleman loader and screening plant or similar equipment; combination hoe and loader over ½ yd; Conveyors - regardless of motive power; Front end loader 3 cy. up to 7 cy.; Joy drill limited to joy heavy weight champion or equivalent; Mucking machine; Post hole digger; pumpcrete machine; rock boring machine; vibratory hammer; welder & well digger	13.09	1.05	.95		.15
Asphalt Spreader	12.83	1.05	.95		.15
Bulldozer; Carry-all Operators; Grader; & Scraper pan	12.75	1.05	.95		.15

DECISION NO. CT80-2074

	Basic Hourly Rates	Fringe Benefits Payments			
		H & W	Pensions	Vacation	Education and/or Appr. Tr.
POWER EQUIPMENT OPERATORS (cont'd)					
Combination hoe and loader machine; concrete mixer - 5 bags and over; Front end loader under 3 cy.; powerstone spreader	$12.69	1.05	.95		.15
Air and steam valve	11.78	1.05	.95		.15
Compressor; generator; pump and well point; welding machine	11.65	1.05	.95		.15
Fork lift not over 4'; & Steam Jenny	12.56	1.05	.95		.15
Mechanical Heater	11.46	1.05	.95		.15
Roller	12.43	1.05	.95		.15
Dinky machine; power pavement breaker	12.23	1.05	.95		.15
Fireman (High Pressure)	11.20	1.05	.95		.15
Oiler	10.62	1.05	.95		.15
Crane with boom, excluding jib, over 150' - $.25 extra.					
Crane with boom, excluding jib over 200' - $.50 extra					
LABORERS (Heavy and Highway Construction):					
Laborers	8.65	.60	.80		.10
Acetylene burners; Asphalt raker; Chain saw operator; Concrete & power buggy operators; Concrete saw operators; fence & guard rail erectors; form setters; hand operated concrete vibrator operators; hand operated vibratory compactor operators; Mason tenders; pipelayers; pneumatic gas & electric drill operators; powdermen & wagon drill operators	8.90	.60	.80		.10

DECISION NO. CT80-2074

	Basic Hourly Rates	Fringe Benefits Payments			
		H & W	Pensions	Vacation	Education and/or Appr. Tr.
LABORERS: (cont'd)					
Air track operators; block paver; curb setters	9.15	.60	.80		.10
Blasters	9.40	.60	.80		.10
Open air caisson, cylindrical work and boring crew:					
Top man	8.65	.60	.80		.10
Bottom man	9.15	.60	.80		.10
LABORERS (Building Construction):					
Laborer	8.65	.60	.80		.10
Asphalt rakers, concrete & power buggy ops, concrete saw ops, chain saw ops, fence & guard rail erectors, form setters, pipelayers, dry stone wall builders, mason tenders, pneumatic drill ops, pneumatic gas & electric drill ops, powdermen & wagon drill operators and Precast erectors	8.90	.60	.80		.10
Air track operators, block pavers; and curb setters, sandblasters, wagon drill operators	9.15	.60	.80		.10
Open air caisson, cylindrical work and boring crew:					
Top man	8.65	.60	.80		.10
Bottom man	9.15	.60	.80		.10

DECISION NO. CT80-2074

	Basic Hourly Rates	Fringe Benefits Payments			
		H & W	Pensions	Vacation	Education and/or Appr. Tr.
POWER EQUIPMENT OPERATORS: (Heavy and Highway)					
CLASS 1	$13.70	1.10	1.10	a	.15
CLASS 2	13.51	1.10	1.10	a	.15
CLASS 3	13.11	1.10	1.10	a	.15
CLASS 4	12.87	1.10	1.10	a	.15
CLASS 5	12.68	1.10	1.10	a	.15
CLASS 6	12.45	1.10	1.10	a	.15
CLASS 7	12.19	1.10	1.10	a	.15
CLASS 8	11.09	1.10	1.10	a	.15
CLASS 9	11.22	1.10	1.10	a	.15
CLASS 10	11.66	1.10	1.10	a	.15
CLASS 11	12.10	1.10	1.10	a	.15
CLASS 12	10.65	1.10	1.10	a	.15
CLASS 13	11.58	1.10	1.10	a	.15
CLASS 14	7.05	1.10	1.10	a	.15
Crane with 150' boom - $.25 extra					
Crane with 200' boom - $.50 extra					

CLASSIFICATIONS: POWER EQUIPMENT OPERATORS

CLASS 1: Erecting and handling structural steel; front end loader (7 cy. or over).
CLASS 2: Piledriver; Power shovel and crane; Dragline; Gradall; Trenching machine; lighter derrick; paver (concrete); derrick (stiff leg and guy); steel pile sheeting; koehring loader (scooper) master machine
CLASS 3: Drill (joy heavy weight champion or equivalent); side boom; loader (euclid); mucking machine; pumpcrete; rock and earth boring machine; Post hole digger; well digger; & hammer (vibratory); central mix; combination hoe & loader (over ½ yd.)
CLASS 4: Asphalt spreader
CLASS 5: Front end loader (3 yds. or over); Grader; power stone spreader; combination hoe and loader.
CLASS 6: Asphalt roller; bulldozer; carryall; maintenance engineer; concrete mixer (5 bags and over); Welder
CLASS 7: Front end loader (under 3 yds.); roller; power chipper; fork lift; finishing machine; asphalt plant; power pavement breaker; dinky machine

DECISION NO. CT80-2074

CLASSIFICATIONS: POWER EQUIPMENT OPERATORS

CLASS 8: Compressor; pump
CLASS 9: Firemen (high pressure)
CLASS 10: Well point system
CLASS 11: Compressor battery
CLASS 12: Oiler
CLASS 13: Batch plant; bulk cement plant
CLASS 14: Track backhoe oiler

	Basic Hourly Rates	Fringe Benefits Payments			
		H & W	Pensions	Vacation	Education and/or Appr. Tr.
POWER EQUIPMENT OPERATORS:					
Survey Crew					
Chief of Party	$11.65	1.10	1.10	a	.15
Ass't Chief of Party	10.81	1.10	1.10	a	.15
Instrument Man	9.97	1.10	1.10	a	.15
Rodman & Chainman	7.43	1.10	1.10	a	.15
TRUCK DRIVERS (Building, Heavy, and Highway Construction)					
CLASS 1	9.26	1.04	1.10	a	
CLASS 2	9.36	1.04	1.10	a	
CLASS 3	9.46	1.04	1.10	a	
CLASS 4	9.41	1.04	1.10	a	
CLASS 5	9.51	1.04	1.10	a	
CLASS 6	9.56	1.04	1.10	a	

CLASSIFICATIONS: TRUCK DRIVERS

CLASS 1: Two axle trucks; helpers
CLASS 2: Three axle trucks; two axle ready mix
CLASS 3: Four axle trucks; heavy duty trailer-up to 40 tons
CLASS 4: Three axle ready-mix
CLASS 5: Four axle ready-mix; specialized earth moving equipment other than conventional type on-the-road trucks and semi-trailer (including Euclids)
CLASS 6: Heavy duty trailer-40 tons and over

PAID HOLIDAYS:
A-New Year's Day; B-Memorial Day; C-Independence Day; D-Labor Day; E-Thanksgiving Day & F-Christmas Day

FOOTNOTE:
a. 7 paid holidays: A through F and Good Friday

SUPERSEDEAS DECISION

DECISION NO. IL80-2061

PAGE 2

STATE: Illinois
COUNTY: Winnebago
DECISION NO.: IL80-2061
DATE: Date of Publication
Supersedes Decision No.: IL79-2068, dated August 24, in 44 FR 49827
DESCRIPTION OF WORK: Residential Construction Projects consisting of single family homes and apartments up to and including 4 stories

Winnebago County Illinois Residential Construction	Basic Hourly Rates	Fringe Benefits Payments			
		H & W	Pensions	Vacation	Education and/or Appr. Tr.
ASBESTOS WORKERS	$12.90	.85	.90		.07
BOILERMAKERS	13.05	1.05+40	1.00	5%	.03
BRICKLAYERS	13.60	.65	1.20		.01
CARPENTERS & SOFT FLOOR LAYERS	13.26	.65	1.47		
CEMENT MASONS	11.78	.55	1.00		
ELECTRICIANS: No Limit on Units	6.65	.50	3%+.80		½%
IRONWORKERS: Structural, Ornamental and Reinforcing	13.25	.75	1.875		.10
LABORERS	11.40	.65	.80		.035
LATHERS	11.79	.55	.60		
MARBLE SETTERS, TERRAZZO WORKERS & TILE SETTERS	11.45	.55	.70		
PAINTERS	10.95	.55			
PLASTERERS	11.23	.55	1.00		
PLUMBERS & STEAMFITTERS	15.41	.65	.95		.10
ROOFERS	13.35	.55			
SHEET METAL WORKERS	14.05	.65	1.42		.09
TRUCK DRIVERS - 2 and 3 Axle	12.00	.55	1.00		
WELDERS - Rate for Credit					
POWER EQUIPMENT OPERATORS:					
CLASS I	13.95	1.20	1.20	.70	.05
CLASS II	12.65	1.20	1.20	.70	.05
CLASS III	11.50	1.20	1.20	.70	.05
CLASS IV	10.25	1.20	1.20	.70	.05

POWER EQUIPMENT OPERATORS CLASSIFICATION DEFINITIONS

CLASS I - Asphalt Plant, Asphalt Spreader, Auto-Grad, Batch Plant, Benoto (Requires two engineers), Boiler & Throttle Valve, Caisson Rigs, Central Redi-Mix Plant, Combination Backhoe Front End Loader Machine Compressor & Throttle Valve, Concrete Breaker (Truck Mounted), Conveyor, Concrete Paver, Concrete Placer, Concrete Tower, Cranes (all), Derricks (all), Grader, Elevating, Grouting Machines, Highlift Shovels or Front End Loader 2½ yd. & over, Hoists, One, Two & Three Drum Hoists, Two Tugger One Floor, Hydraulic Boom Truck, Locomotives (all), Motor Patrol, Pile Drivers & Skid Rig, Post-Hole Digger, Pre-Stress Machine, Pump Cretes Dual Ram (requiring frequent lubrication & water), Pumpcretes, Squeeze Cretes - Screw type Pumps, Gypsum Bulker & Pump, Rock Drill (Self-Propelled), Rock Drill (truck mounted), Scoops - Tractor Drawn, Slip Form Paver, Straddle Buggies, Tournapull, Tractor with Boom & Side Boom, Trenching Machines

CLASS II - Boilers, Bulldozers, Broom all Power Propelled, Concrete Mixer (2 bag & over), Conveyor Portable, Forklift Truck, Greaser Engineer, Highlift Shovels or Front End Loaders under 2½ yd., Hoists, Automatic, Hoists, All Elevators, Hoists, Tugger Single Drum, Rollers, (All), Steam Generators, Stone Crushers, Tractors, (All), Winch Trucks with "A" Frame

CLASS III - Air Compressor - Small 125 & under (1 to 5 not exceed a total of 300 ft.), Air Compressor - large over 125, Combination - Small Equipment Opr., Generators under & over 50 KW, Heaters, Mechanical Pumps over 3" (1 to 3 not to exceed a total of 300 ft.), Pumps, Well Points, Welding Machine (2 through 5), Winches, A Small Electric Drill Winches

CLASS IV - Oilers

Unlisted classifications needed for work not included within the scope of the classifications listed may be added after award only as provided in the labor standards contract clauses (29 CFR, 5.5 (a)(1)(ii)).

SUPERSEDEAS DECISION

STATE: KANSAS COUNTIES: RILEY & GEARY
DECISION NO: KS80-4069 DATE:
Supersedes Decision No. KS79-4090 dated October 5, 1979, 44 FR 57628
DESCRIPTION OF WORK: Residential construction consisting of single family homes and garden-type apartments up to and including 4 stories.

	Basic Hourly Rates	Fringe Benefits Payments			
		H & W	Pensions	Vacation	Education and/or Appr. Tr.
Bricklayers	$10.00				
Carpenters	6.88				
Electricians	7.16				
Laborers:					
common	4.72				
form setter	4.50				
mason tender	4.50				
Painters	7.63				
Plumbers	13.51	.92	.60		.05
Roofers	6.00				
Sheet metal workers	5.00				
Truck drivers	4.50				
Power Equipment Operators:					
air compressor	4.00				
backhoe	6.00				
bulldozer	6.00				
concrete saw	4.30				
grader	6.00				
loader	5.50				
scraper	6.00				
shovel	5.38				
tractor	6.00				
trenching machine	4.50				

SUPERSEDEAS DECISION

STATE: Kentucky COUNTY: Warren
DECISION NUMBER: KY80-1089 DATE: Date of Publication
Supersedes Decision Number KY79-1145, dated November 16, 1979, 44 FR 66139
DESCRIPTION OF WORK: BUILDING CONSTRUCTION PROJECTS (does not including single family homes and apartments up to and including four stories).

	Basic Hourly Rates	Fringe Benefits Payments			
		H & W	Pensions	Vacation	Education and/or Appr. Tr.
ASBESTOS WORKERS	$12.70	.75	1.25		
BOILERMAKERS	13.20	1.275	1.20		.04
BRICKLAYERS, STONE MASONS, MARBLE MASONS, TILE SETTERS, & TERRAZZO WORKERS	10.45	.45	.40		
CARPENTERS & SOFT FLOOR LAYERS	9.30	.55	.55		.05
CEMENT MASONS & PLASTERERS	11.50				.01
ELECTRICIANS & CABLE SPLICERS	11.00	.50	3%		½of1%
ELEVATOR CONSTRUCTORS:					
Mechanics	13.62	1.195	.82	a+b+c	.035
Helpers	9.53	1.195	.82	a+b+c	.035
GLAZIERS	10.50	.60	.50	a	.02
IRONWORKERS	12.20	.80	.80		.12
LATHERS	10.20		.30	.90	.01
LINE CONSTRUCTION:					
Linemen, Line Truck, Hole Digger, & Cable Splicers	11.50		3%		½of1%
Groundmen - Truck Drivers with Winch	9.775		3%		½of1%
Groundmen - truck drivers	9.20		3%		½of1%
MARBLE, TERRAZZO, & TILE FINISHERS	9.65				
MILLWRIGHTS	12.75	.55	.85		.05
PAINTERS:					
Brush & Roller	9.80	.40	.50		.10
Spray Work, Drywall Finishers	10.45	.40	.60		.10
Structural Steel, Swing Stage & Chair, & Motor Stage	10.70	.40	.60		.10
Paperhangers	10.95	.40	.60		.10
Sandblasting	11.20	.40	.60		.10
PILEDRIVERMEN	9.55	.55	.55		.05
PIPEFITTERS	14.56	.80	1.55		.11
PLUMBERS	14.42	1.05	1.40		.15
ROOFERS	9.25	.60	.45	.26	
SHEET METAL WORKERS	12.88	1.563	1.47		.16
SPRINKLER FITTERS	14.30	.85	1.20		.08
WELDERS - Receive rate prescribed for craft performing operation to which welding is incidental.					

DECISION NO. KY80-1089

FOOTNOTES:

a. Six Paid Holidays: New Year's Day; Memorial Day; Independence Day; Labor Day; Thanksgiving Day

b. Vacation Pay credit - Employer contributes 8% of the basic hourly rate for employees with 5 years or more of service, or 6% for employees with 6 months to 5 years of service

c. Friday after Thanksgiving

LABORERS:					
GROUP 1	8.30	.40	.70		
GROUP 2	8.45	.40	.70		
GROUP 3	8.80	.40	.70		

GROUP 1 - General Laborers; Wrecking Labor on Buildings, Clearing right-of-way and Building site; Carpenters Tenders; Truck Spotters and Dumpers; Axe and Cross Cut Saw Filer; Concrete Pudlers and Form Strippers

GROUP 2 - All Power Driven Tools; Hod carriers; Mason Tenders; Finisher Tenders; Mortar Mixers; Jack Hammers; Vibrators; Wagon Drill; Core Drill; Test Drill; Well Drill; Concrete Pump Machine; Tunnel Boring Machine; Men in Tunnel and Crib Ditch Work; Signal Men; Riprap Rock Setters and Handlers; Asphalt Rakers; Tampers and Smoothers; Pipelayers; Grout Pump Men; Chain Saw; Pipe Clearing; Doping and Wrapping; Swampers and straight Cable Hooking; Cement Guns; Grade Checkers Machine Excavating; Batch Plant Scale Man; Sand Hog Free Air; Sand Hog Compressed Air; cutting Torch Man on Salvage Work; Road Form Setters; Brick Slingers; Hand Spikers; Power Buggy; Handling of Creosote Material; Sandblasters; Curing of Concrete and apply hardner; Air and Gas Tampers; concrete Saw; Power Posthole Diggers and Green cut Men on Concrete Work

GROUP 3 - Powermen; Blasters

DECISION NO. KY80-1089

POWER EQUIPMENT OPERATORS:	Basic Hourly Rates	Fringe Benefits Payments			
		H & W	Pensions	Vacation	Education and/or Appr. Tr.
CLASS A	11.60	.50	.80		.05
CLASS B	8.86	.50	.80		.05
CLASS C	8.09	.50	.80		.05

CLASS A - Auto Patrol, Batcher Plant, Bituminous Paver, Cableway, Central Compressor Plant, Clamshell, Concrete Mixer (21 cu. ft. or over), Concrete Pump, Crane, Crusher Plant, Derrick, Derrick Boat, Ditching and Trenching Machine, Dragline, Dredge Operator, Dredge Engineer, Elevating Grader and all types of Loaders, Hoe Type Machine, Hoist (1-drum when used for stack or chimney construction or repair), Hoisting Engine (2 or more drums), Locomotive, Motor Scraper, Carry-all Scoop, Bulldozer, Heavy Duty Welder, Mechanic, Orangepeel Bucket, Pile Driver, Power Blade, Motor Grader, Roller (bituminous), Scarifer, Shovel, Tractor Shovel, Truck Crane, Winch Truck Push Dozer, Highlift, Forklift (regardless of lift height and except when used for masonry construction), all types of Boom Cats, Core Drill, Hopto, Tow or Push Boat, A-Frame Winch Truck, Concrete Paver, Gradall, Hoist, Hyster, Pumpcrete, Ross Carriers, Boom, Tail Boom, Rotary Drill, Hydro Hammer, Mucking Machine, Rock Spreader attached to Equipment, Scoopmobile, KeCal Loader, tower Cranes (French, German and othe. Types), Hydrocrane, Backfiller, Gurries, Sub-grader;

CLASS B - All Air Compressors (over 900 cu. ft. per min.), Bituminous Mixer, Joint Sealing Machine, Concrete Mixer (under 21 cu. ft.), Form Grader, Roller (Rock), Tractor (50 hp and over), Bull Float, Finish Machine, Cutboard Motor Boat, Flexplain, Fireman, Boom Type Tamping Machine, Truck Crane Oiler, Greaser on Grease Facilities Servicing Heavy Equipment, Switchman or Brakeman, Mehcanic Helper, Whirley Oiler, Self-Propelled Compactor, Tractair and road widening) Trencher and Farm Tractor with attachments except backhoe, highlift and end loader, elevator (regardless of ownership when used for Hoisting any building hoist), Forklift (when used for masonry construction), well points, Grout Pump, Throttle-valve Man, Tugger, Electric Vibrator Compactor;

CLASS C - Bituminous Distributor, Cement Gun, Conveyor, Mud Jack, Paving Joint Machine, Roller (earth), Tamping machine, Tractors (under 50 hp), Vibrator, Oiler, Concrete Saw, Burlap and Curing Machine, Hydro-seeder, Power form Handling Equipment, Deckhand Steersman, Hyraulic Post Driver, Drill Helper

Page 4

EECISION NO. KY80-1089

	Basic Hourly Rates	Fringe Benefits Payments			
		H & W	Pensions	Vacation	Education and/or Appr. Tr.
TRUCK DRIVERS:					
Truck Tender	8.86	.525c	.50c	d	
DRIVER, 3 tons and under, Greaser, Tire, changer, & Mechanic Helper	8.98	.525c	.50c	d	
Driver, over 3 Tons, Semi-Trailer or Pole Trailer, Dump Truck, Tandem Axle, Farm Tractor when used to pull Building Material or Equipment;	9.09	.525c	.50c	d	
Driver, Concrete Mixer Trucks (all types, Hauling only jobsites);	9.16	.525c	.50c	d	
Driver, Euclid & other Heavy Earth Moving Equipment and Low Boy, Winch Truck and A-Frame & Mono-rail Truck when used to Transport Building Materials	9.26	.525c	.50c	d	

FOOTNOTES:

c. Employer contributes to employees whose names appear on the payroll and have been employed a minimum of 20 work days within any 90 consecutive day period

d. Vacation and pay equal to 40 hours to any employee who has been regularly employed on a project for one year and who has worked a minimum of 1200 hours during the year

Unlisted classifications needed for work not included within the scope of the classifications listed may be added after award only as provided in the labor standards contracts clauses (29 CFR, 5.5 (a)(1)(ii)).

SUPERSEDEAS DECISION

STATE: Maine COUNTY: Cumberland
DECISION NO.: ME80-2069 DATE: Date of Publication
Supersedes Decision No.: ME79-2042, dated May 4, 1979, in 44 FR 26434
DESCRIPTION OF WORK: Building Construction Projects (does not include single family homes and apartments up to and including 4 stories).

	Basic Hourly Rates	Fringe Benefits Payments			
		H & W	Pensions	Vacation	Education and/or Appr. Tr.
BRICKLAYERS	$ 9.30	.50	.50		.02
CARPENTERS	6.86				
CEMENT MASONS	9.30	.50	.50		.02
ELECTRICIANS	11.60	.65	3%+.25		.02
GLAZIERS	5.91				
IRONWORKERS	10.65	1.15	1.35		.04
LABORERS	7.17	.75	1.10		.10
MILLWRIGHTS	9.35	.65	.70		.03
PAINTERS	5.70				
PLUMBERS/PIPEFITTERS	10.80	.70	1.00		.02
ROOFERS	6.60				
SHEET METAL WORKERS	6.30				
TRUCK DRIVERS:					
2 AXLE	4.39				
3 AXLE	4.75				
POWER EQUIPMENT OPERATORS:					
PAVER	5.58				
ROLLER	5.32				

Unlisted classifications needed for work not included within the scope of the classifications listed may be added after award only as proveded in the labor standards contract clauses (29 CFR, 5.5 (a) (1) (ii)).

SUPERSEDEAS DECISION

STATE: Michigan
DECISION No. MI80-2062
COUNTIES: See below
DATE: Date of Publication
Supersedes Decision No. MI79-2012 dated May 4, 1979 in 44, FR 26435
DESCRIPTION OF WORK: Building (does not include single family homes and apartments up to and including 4 stories) and Heavy (excluding Bridge Airport and Sewer) Construction Projects.

COUNTIES: Alcona, Alpena, Charlevois, Emmet, Grand Traverse, Leelanau, Mason, Montmorency, Muskegon, Oceana, Oscoda and Presque Isle.

	Basic Hourly Rates	Fringe Benefits Payments			
		H & W	Pensions	Vacation	Education and/or Appr. Tr.
ASBESTOS WORKERS	$12.60	1.05	1.78		.02
BOILERMAKERS	13.065	1.28	1.30		.03
BRICKLAYERS:					
Mason County:					
Bricklayers; Stonemasons; Marble-Tile Workers, Cement Masons & Plasterers	8.70	.65	.35		
Muskegon & Oceana Counties					
Bricklayers & Stonemasons	10.795	.80	.75		
Marble Masons	10.15	.80	.50		
Terrazzo & Tile Workers	9.85	.80	.50		
Platerers	12.22	.80	1.00		.03
Remaining Counties					
Bricklayers; Stonemasons; Plasterers-Marble Workers	11.85	.85	.25		.03
Terrazzo & Tile Workers	11.29	.85	.25		.03
CARPENTERS:					
Mason. Muskegon & Oceana Counties					
Carpenters	12.44	.75	.90		.10
Millwrights	13.30	.60	.80		.05
Piledrivers	11.70	.60	.80		.04
Remaining counties					
Carpenters & Soft Floor Layers	10.91	.75	.90		.03
Millwrights	11.66	.75	.90		.03
Piledrivers	11.36	.75	.90		.03
CEMENT MASONS:					
Muskegon & Oceana Counties	9.30	.70	.75		.02
Remaining Counties	11.40	.85	.25		.03
ELECTRICIANS:					
Charlevoix, Grand Traverse Leelanau & Emmet (except Wawatan Township) Counties and (Grant, Freesoil, and Meade Townships) in mason County	12.85	.75	.65		.1 of 1%

ELECTRICIANS (CONT'D)	Basic Hourly Rates	Fringe Benefits Payments			
		H & W	Pensions	Vacation	Education and/or Appr. Tr.
Muskegon. Oceana and the Remainder of Mason Counties	$13.16	.75	9%		.03
Remining Counties & (Wawatan Township) in Emmet County:					
Electrical Contractors $35.000 and below	11.35	.75	3%+.30		.1 of 1%
Electrical Contracts in excess of $35,000	13.30	.75	3%+.30		.1 of 1%
ELEVATOR CONSTRUCTORS:					
Alcona, Alpena, Montmorency, Oscoda and Presque Isle:					
Elevator Constructor	11.21	.745	.56	a	.025
Elevator Constructor Helpers	70%JR	.745	.56	a	.025
ELEVATOR CONSTRUCTORS:					
Remainder of Counties:					
Elevator Constructors	10.88	.89	.69	a	.02
Elevator Constructors Helpers	70%JR	.89	.69	a	.02
GLAZIERS:					
Emmet & Muskegon Counties					
Charlecoix, Grand Traverse, Leelanau, Mason, & Oceana Counties	10.25	.70	.35	3%	
IRONWORKERS:					
Alcona, Alpena, Montmorency, Oscoda and Preque Isle Counties:					
Structural and Ornamental	13.90	9%	17%	18%	.09
Reinforcing	12.08	.98+.50	19%	19%	.12
Fence Erectors	11.59	9%	17%	18%	.09
Remaining Counties	13.08	6%	8%		.10
LATHERS:	8.85	.64	.10	.50	.01
Grand Traverse County	11.78	1.06	.30		.01
Muskegon County	12.22	1.06	.30		.01
PAINTERS:					
Alcona and Oscoda Counties					
Brush	10.15	.55	.80		.02
Spray	11.00	.55	.80		.02

DECISION No. MI80-2062

	Basic Hourly Rates	Fringe Benefits Payments			
		H & W	Pensions	Vacation	Education and/or Appr. Tr.
Grand Traverse and Leelanau Counties and that portion of Charlevoix County lying South of and Straight line drawn from Charlevoix (city) to Elmira					
Brush	$10.27	.60	.25		.02
Spray	10.92	.60	.25		.02
Tapers	10.87	.60	.25		.02
Mason County	8.75				
Muskegon & Oceana Counties					
Brush, Tapers	8.00				
Paper Hangers	8.25				
Spray & Sandblast	8.50				
Remainder of Charlevoix County and Remaining Counties					
Brush & Drywall	10.95				
Spary - Commercial	11.70				
PLUMBERS & STEAMFITTERS:					
Alcona and Oscoda Counties	11.34	.85	.60	1.80	
Alpena, Montmorency & Presque Isle Counties	14.51	.45	.80		
Mason, Muskegon & Oceana Counties	12.05	1.19	1.46		
Remaining Counties	14.15	.75	.50		.03
ROOFERS:					
Mason, Muskegon & Oceana Counties	9.95	.67		.20	.01
Remainder of Counties: Composition, Damp & Waterproofers	11.05	.75	.53		.06
SHEET METAL WORKERS:					
Charlevoix, Emmet, Grand Traverse and Leelanau Counties	13.99	.75	.53		.06
Mason, Muskegon & Oceana Counties	11.40	.77	.95	.67	.02
Remaining Counties	12.86	.80	1.00		.03
SPRINKLER FITTERS	14.30	.85	1.20		.08

DECISION No. MI80-2062

	Basic Hourly Rates	Fringe Benefits Payments			
		H & W	Pensions	Vacation	Education and/or Appr. Tr.
TRUCK DRIVERS:					
Alcona, Alpena, Montmorency Oscoda & Presque Isle Counties Regular Truck Driver	$ 9.40	b31.00	b37.00	.50	
8 cu. yds. and over	9.50	b31.00	b37.00	.50	
Euclid Type Bottom & End Dump	9.70	b31.00	b37.00	.50	
Charlevoix, Emmet, Grand Traverse and Leelanau Counties Regular Truck Driver	8.55	b28.00	b20.00	c	
8 cu. yds, and over	8.65	b28.00	b20.00	c	
Semi-Driver	8.75	b28.00	b20.00	c	
Muskegon & Oceana Counties	7.06	b21.00			

Welder receive rate prescribed for craft to which welding is incidental.

FOOTNOTES:

A. Employer contributes 8% of regular hourly rate to vacation pay credit for employee who has worked in business less than 5 years; 6% contribution for more than 5 years-plus 7 paid Holidays-New Years Day, Memorial Day, Independence Day, Thanksgiving Day, Day after Thanksgiving & Christmas Day.

b. Per week; Per Employee & Dental & Optical

c. Paid vacation computed at a 40 hour week at straight time as follows: one year or more - one week; three years or more - two weeks; eight years or more - three weeks; and 7 Paid Holidays provided employee has been in service of employer 20 days or more and worked the full scheduled day prior to and after the holiday - New Years Day, Memorial Day, Independance Day, Labor Day, Thanksgiving Day, and the Friday after Christmas Day.

Unlisted classifications needed for work not included within the scope of the classifications listed may be added after award only as provided in the labor standards contract clauses (29 CFR, 5.5 (a)(1)(ii))

DECISION No. MI80-2062

	Basic Hourly Rates	Fringe Benefits Payments			
		H & W	Pensions	Vacation	Education and/or Appr. Tr.
LABORERS:					
Mason County					
Group 1	$ 7.75	.75	.50		.04
Group 2	7.90	.75	.50		.04
Group 3	8.20	.75	.50		.04
Group 4	8.15	.75	.50		.04
Muskegon and Oceana Counties					
Group 1	8.46	.75	.50	.55	.04
Group 2	8.61	.75	.50	.55	.04
Group 3	8.71	.75	.50	.55	.04
Group 4	8.96	.75	.50	.55	.04
Remaining Counties					
Group 1	7.35	.65	.35	.55	.04
Group 2	7.50	.65	.35	.55	.04
Group 3	7.95	.65	.35	.55	.04

LABORERS:

Mason County
Group 1 - Building And Heavy Construction Laborers
Group 2 - Plaster and Mason Tenders; Mortar Mixers; Material Mixers; All power Tools; Vibrator; Chain saw; Nozzleman; Green Cut Concrete
Group 3 - Jackhammer; Acetylene Torch; Windlass and Tugger Operators; swing Scaffold Chimneys; Tower, Crane Scaffold; Rock Crusher
Group 4 - Pipelayers or Crock Layers in Buildings

Muskegon and Oceana Counties
Group 1 - All Construction Laborers on Building on Heavy Construction Pumps and well Wheels
Group 2 - Plasterer tender; Material Mixers; Operators of Portable Mixers; Air, Electric or Gasoline Tools; Mortar Driver Buggies; Swing Scaffold
Group 3 - Jackhammer Operator, Crocklayers & Caisson workers in Buildings
Group 4 - Top men on Chimney or Towers over 30' in Height

Remaining Counties:
Group 1 - Building and Heavy Construction Laborers
Group 2 - Mortar Mixer; Material Mixers; (hand or machine); Vibrator Operators; Operators of Concrete Mixers; Chipping Hammer; Concrete Breakers (90 lb. hammer or less); Tamping Machine (air, gas or electric); Sandblasters; Operator or Motor Driven Buggies; Plaster Mixer; Plasterers Tenders
Group 3 - Cement Gun Nozzleman

DECISION No. MI80-2062

LC - ZONE II

LINE CONSTRUCTION: ZONE II	Basic Hourly Rates	Fringe Benefits Payments			
		H & W	Pensions	Vacation	Education and/or Appr. Tr.
Linemen; Technician	$12.50	.45	3%+4%	a+5%	.5%
Cable Splicer	13.01	.45	3%+4%	a+5%	.5%
Combination Digger Operator; Tractor Operator Groundman	9.75	.45	3%+4%	a+5%	.5%
Light Equipment Operator Groundman; Distribution Line Truck Driver Operator-Groundman	8.56	.45	3%+4%	a+5%	.5%
Combination Winch Truck Driver Groundman	8.17	.45	3%+4%	a+5%	.5%
Combination Truck Driver Groundman	6.92	.45	3%+4%	a+5%	.5%

FOOTNOTES:

7 paid Holidays; New Year's Day; Memorial Day; Independence Day; Labor Day; Thanksgiving Day; Day after Thanksgiving Day; and Christmas Day.

DECISION No. MI80-2062

MICH-3-PEO-1-2

POWER EQUIPMENT OPERATORS: BUILDING & HEAVY CONSTRUCTION	Basic Hourly Rates	Fringe Benefits Payments			
		H & W	Pensions	Vacation	Education and/or Appr. Tr.
CLASS A	$13.55	.95	1.50		.05
CLASS B	13.30	.95	1.50		.05
CLASS C	12.00	.95	1.50		.05
CLASS D	11.65	.95	1.50		.05
CLASS E	11.45	.95	1.50		.05
CLASS F	10.25	.95	1.50		.05
CLASS G	9.55	.95	1.50		.05

CLASS A - Crane with main boom & jib 220' or longer

CLASS B - Crane with main boom & jib 140' or longer, tower crane, gantry cranes, whirley derrick

CLASS C - Regular equipment operator, cranes, stiff leg derrick, scraper, dozer, grader, front end loader, hoist, job mechanic & head grease man.

CLASS D - Air Tugger (single drum), Material Hoist, Boiler Oprs., Sweeping Machine, winch Truck, Bob Cat & Similar equipment, Fork Truck (over 20' lift)

CLASS E - Pump 6" or over, Well Points, Freeze systems, Boom truck (non Swingin) Fork Truck (20' Lift)

CLASS F - Air Compressor, Welder, Generators, Pumps under 6", Grease Man, Conveyors

CLASS G - Oiler, Firemen & Heater Operator

DECISION No. MI80-2062

MICH-2-PEO-SE

POWER EQUIPMENT OPERATORS: STEEL ERECTION ALCONA, ALPENA, MONTMORENCY OSCODA & PREQUE ISLE COUNTIES	Basic Hourly Rates	Fringe Benefits Payments			
		H & W	Pensions	Vacation	Education and/or Appr. Tr.
CLASS A	$11.57	.55	.75	10%	.05
CLASS B	11.33	.55	.75	10%	.05
CLASS C	10.85	.55	.75	10%	.05
CLASS D	10.70	.55	.75	10%	.05
CLASS E	9.61	.55	.75	10%	.05
CLASS F	8.65	.55	.75	10%	.05

CLASS A - Engineer when operation combination of boom jib 220' or longer
CLASS B - Engineer when operating combination of boom & jib 140' or longer, Tower crane & derrick operator (where operators work stations is 501 or more above first sub level
CLASS C - Crane operator job mechanic
CLASS D Hoisting operator
CLASS E Compressor (or welder) operator
CLASS F - Oiler or fireman

MICH-6-PEO-SE

POWER EQUIPMENT OPERATORS: STEEL ERECTION REMAINING COUNTIES	Basic Hourly Rates	Fringe Benefits Payments			
		H & W	Pensions	Vacation	Education and/or Appr. Tr.
CLASS A	$13.90	.95	1.50		.05
CLASS B	13.65	.95	1.50		.05
CLASS C	13.15	.95	1.50		.05
CLASS D	12.00	.95	1.50		.05
CLASS E	10.75	.95	1.50		.05
CLASS F	9.55	.95	1.50		.05

CLASS A- Crane operator w/main boom & jib 220' or longer
CLASS B - Crane operator w/main boom & jib 140' or longer; power cranes, gantry crane; whirley derrick
CLASS C - Regular equipment operator; crane, dozer, loader; hoist, straddle wagon, Job mechanic
CLASS D - Air tugger (single drum); material hoist, pump 6" or over
CLASS E - Air compressor, welder, generators-conveyors
CLASS F - Oiler & Fireman

DECISION No. MI80-2062

MICH-9-PEO-U-2-2

POWER EQUIPMENT OPERATORS: UNDERGROUND CONSTRUCTION

	Basic Hourly Rates	Fringe Benefits Payments			
		H & W	Pensions	Vacation	Education and/or Appr. Tr.
CLASS I	$ 9.24	.80	1.00	10%	.05
CLASS II	8.98	.80	1.00	10%	.05
CLASS III	8.52	.80	1.00	10%	.05
CLASS IV	8.27	.80	1.00	10%	.05

CLASS I - Power shovel, crane (crawler, truck type or pile driving), dragline, backhoe clamshell, trencher (over 8' digging capacity), mechanic, endloader (over 1½ cu. yd. cap.), grader, scraper (selfpropelled or tractor drawn), dozer (9' blade & over), concrete paver (2 drum or larger), side boom tractor (type D-4 or equivalent & larger), elevating grader, roller (asphalt), gradall (and similar type machine), batching plant operator (concrete), backfiller tamper, well drilling rig, slip from paver slope paver, conveyor loader (euclid type)

CLASS II - Trencher (8' digging capacity & smaller), endloader (1½ cu. yd. capacity or smaller), dozer (less than 9' blade), side boom tractor (smaller than type D-4 or equivalent), pump () or more 6" discharge or larger - gas or diesel powered or powered by generator of 300 amps or more inclusive of generator), hoist, boom truck (power sing type boom), tractor (pneu-tired, other than backhoe or front endloader), crusher

CLASS III - Air compressor (2 or more - less than 600 CFM), air compressors 600 cu. ft. per min. or larger), pumcrete machine (and similar equipment), mechanic helper, maintenance man, boom truck (non-swinging, non powered type boom), welding machine or generator 2 or more - 300 amp. or larger gas or diesel powered), pump (2 or more - 4" up to 6" discharge - gas or diesel powered - excluding submersible pumps), concrete paver (1 drum 1/2 cu. yd. or larger wagon drill (multiple), elevator (other than passenger), concrete breaker (self-propelled or truck mounted - include compressor)

CLASS IV - Hydraulic pipe pushing machine, pumps (2 or more up to 4" discharge if used 3 hours or more a day or diesel powered - excluding submersible pumps), trencher (service), boiler, vibrating compaction equipment, self propelled (6' wide or over), stump remover, mulching equipment, farm tractor (with attachment), finishing machine (self-propelled), concrete saw (40 H.P. or over)

SUPERSEDEAS DECISION

STATE: Michigan COUNTIES: See Below
DECISION No. MI80-2063 DATE: Date of Publication
Supersedes Decision No. MI79-2013, dated May 4, 1979 in 44 FR 26439
DESCRIPTION OF WORK: Building (Does not include single family homes and apartments up to and including four stories) and Heavy (excluding Bridge, Airport and Sewer) Construction Projects.

COUNTIES: Alger, Baraga, Chippewa, Dicknson. Gogebic Houghton, Keweenaw, Mackinac Marquette & Ontonagon

	Basic Hourly Rates	Fringe Benefits Payments			
		H & W	Pensions	Vacation	Education and/or Appr. Tr.
ASBESTOS WORKERS:					
Chippewa & Mackinac Counties	$12.60	1.05	1.78		.02
Gogebic & Ontonagon Counties	12.80	.50	.75		
Remainder of Counties	12.36	.95	.50	1.00	.10
BOILERMAKERS	13.065	1.28	1.30	2.00	.03
BRICKLAYERS:					
Alger & Marquette Counties: Bricklayers, Stonemasons, Plasterers, & Marble-Tile-Terrazo Workers	11.41	.75	.60		.02
Chipeewa & Mackinac Counties: Bricklayers, Stonemasons, Platerers, Tile & Terrazo Workers	11.41	.75	.60		.02
Remainder of Counties: Bricklayers, Stonemasons, Plasterers, Marble-Tile and Terrazzo Workers	11.41	.75	.60		.02
CARPENTERS:					
Carpenters & Soft Floor Layers	11.94	.75	.90		.02
Millwrights	13.59	.75	.90		.02
Piledrivermen	11.14	.60	.80		.02
CEMENT MASONS:					
Alger & Marquette Counties	10.91	.75	.60		.02
Chippewa & Mackinac Counties	10.91	.75	.60		.02
Remainder of Counties	10.91	.75	.60		.02
ELECTRICIANS:					
Dickinson County: Contracts $50.000 or more & all Industrial Work	11.46	.60	3%+1.00		.5%
Contracts less than $50,000	10.09	.60	3%+1.00		.5%
Alger & Marquette Counties: Contracts over $50,000	12.55	.45	3%+1.00		½ of 1%
Contracts over $50,000 or less	10.92	.45	3%+1.00		½ of 1%

DECISION No. MI80-2063

ELECTRICIANS (CONT'D)	Basic Hourly Rates	Fringe Benefits Payments			
		H & W	Pensions	Vacation	Education and/or Appr. Tr.
Chippewa & Mackinac Counties	$11.75	.75	3%+1.00	11%	15.00p/m
Gogebic County	12.13	4%	7%		2%
Remainder of Counties:					
Contracts $45,000 & over	11.19	.60	3%+1.00		½ of 1%
Contracts up to $45,000	8.40	.60	3%+1.00		½ of 1%
ELEVATOR CONSTRUCTORS:					
Contructors	12.13	1.04	.69	a	.035
Helpers	70%JR	1.04	.69	a	.035
IRONWORKERS	12.20	.80	1.15	2.00	.04
PAINTERS:					
Dickinson County:					
Commercial & Industrial	8.95		.75		
Alger & Marquette Counties					
Brush	11.00	.60			.05
Glaziers	11.00	.60			.05
Bridges, Water Tanks, Radio & TV	13.25	.60			.05
Chippewa & Mackinac Counties:					
Commercial-Industrial & Sign Painter	9.55			1.50	
Taper-Hand	10.05			1.50	
Steel	12.05			1.50	
Glaziers	8.35			1.50	
Baraga, Houghton, Keweenaw & the northern portion of Ontonagon County:					
Brush, Paperhangers, Tapers and Glaziers	9.10				
Spray & Sandblasting	9.65				
Gogebic County & the Remainder of Otonagon County:					
Brush, Paerhangers	6.00				
Spray	6.50				

DECISION No. MI80-2063

	Basic Hourly Rates	Fringe Benefits Payments			
		H & W	Pensions	Vacation	Education and/or Appr. Tr.
PLUMBERS & STEAM FITTERS	$14.03	.70	.80		.02
ROOFERS	11.05	.70	.50		
SHEET METAL WORKERS	10.47	.81	.99	1.50	.05
SPRINKLERS FITTERS	14.30	.85		1.20	.08
TRUCK DRIVERS:					
Truck Driver-Regular	10.04	b31.00	b27.00		
Heavy Duty, Double Axle & Semi	10.17	b31.00	b27.00		
Euclid	10.40	b31.00	b27.00		

FOOTNOTES:

a. 7 paid Holidays-New Year's Day-Memorial Day- Independence Day-Labor Day Thanksgiving Day-Day after Thanksgiving & Christmas Day plus employer contributes 8% of Regular Hourly Rate to vacation pay credit for employee who has worked in business more than 5 years & 6% for employees in business less than 5 years

b. Per Week; Per Employee

Unlisted classifications needed for work not included within the scope of the classifications listed may be added after award only as provided in the labor standards contract clauses (29 CFR, 5.5 (a)(1)(ii))

Welders receive rate prescribed for craft performing operation to which welding is incidental.

FOOTNOTES:

a. Employer contributes 2% of regular hourly rate to vacation pay credit for employee who has worked in business less than 5 years; 4% contribution for more than 5 years.

b. Per Week; Per Employee

LABORERS	Basic Hourly Rates	Fringe Benefits Payments			
		H & W	Pensions	Vacation	Education and/or Appr. Tr.
Class A	$ 9.70	.75	.50		.04
Class B	9.80	.75	.50		.04
Class C	10.10	.75	.50		.04
Class D	10.25	.75	.50		.04

LABORERS

CLASS A: General Construction Laborers

CLASS B: Chipping Hammer; Concrete Mixers; Green Cutting (air, electric or gas); Material Mixers (hand or machine; Motor driven buggies; Mortar Mixers; Sand Blasters; Tamping Machines; Vibrator operator; Laborers with concrete mixer to pour, including pour from trucks

CLASS C: Blasters; Buster Operators; Cement Gun Nozzleman; Drillers; Layers of all non-metallic pipe; Mixers

CLASS D: Underground Work, Tunnels and Shafts - muckers, caisson workers, miners, drillers, blasters.

LC ZONE 11

LINE CONSTRUCTION: ZONE 11	Basic Hourly Rates	Fringe Benefits Payments			
		H & W	Pensions	Vacation	Education and/or Appr. Tr.
Linemen; Technician	$12.50	.45	3%+4%	a+5%	.5%
Cable Splicer	13.01	.45	3%+4%	a+5%	.5%
Combination Digger Operator Tractor Operator Groundman	9.75	.45	3%+4%	a+5%	.5%
Light Equipment Operator Groundman; Distribution Line Truck Driver Operator Groundman	8.56	.45	3%+4%	a+5%	.5%
Combination Winch Truck Driver Groundman:	8.17	.45	3%+4%	a+5%	.5%
Combination Truck Driver Groundman	6.92	.45	3%+4%	a+5%	.5%

FOOTNOTE:

a. 7 paid Holidays; New Year's Day; Memorial Day; Independence Day; Labor Day; Thanksgivng Day; Day after Thanksgiving Day; and Independence Day.

DECISION No. MI80-2063

MICH-7-PEO-1-2-SE-U

POWER EQUIPMENT OPERATORS: BUILDING HEAVY & UNDERGROUND CONSTRUCTION	Basic Hourly Rates	Fringe Benefits Payments			
		H & W	Pensions	Vacation	Education and/or Appr. Tr.
CLASS A	$ 9.95	.95	1.50	11%	.02
CLASS B	8.86	.95	1.50	11%	.02
CLASS C	8.34	.95	1.50	11%	.02
CLASS D	7.74	.95	1.50	11%	

CLASS A - Regular equipment operator, crane, dozer, front end loader, job mechanic
CLASS B - Air Track Drill, boom truck concrete mixers, fork truck, material hoist & tugger, pumps 6" or over, pumpcrete, belt crete, squeeze crete, sweeping machine trencher, winches, well points and freeze systems
CLASS C - Air compressor, conveyor, concrete saw, farm tractor (without attachments) generator, guard post driver, mulching pumps under 6" welders
CLASS D - Oiler, fireman heater operator

POWER EQUIPMENT OPERATORS: STEEL ERECTION					
CLASS 1 - Operator	$ 8.95	.80	1.00	10%	.02
CLASS 2 - Compressor & Welder	7.95	.80	1.00	10%	.02
CLASS 3 - Oiler & Fireman	7.05	.80	1.00	10%	

SUPERSEDEAS DECISION

STATE: Michigan COUNTY: Marquette
DECISION No. MI80-2064 DATE: Date of Publication
Supersedes Decision No. MI79-2014 dated May 4, 1979 in FR 26442
DESCRIPTION OF WORK: Residential Construction Projects of single family homes and apartments up to and including 4 stories

	Basic Hourly Rates	Fringe Benefits Payments			
		H & W	Pensions	Vacation	Education and/or Appr. Tr.
ASBESTOS WORKERS	$12.36	.95	.50	1.00	.10
BOILERMAKERS	13.065	1.28	1.30	2.00	.03
BRICKLAYERS & STONEMASONS	11.41	.75	.60		.02
CARPENTERS & SOFT FLOOR LAYERS	8.20	.60	.80		.02
CEMENT MASONS	10.91	.75	.60		.02
ELECTRICIANS	8.95	.45	3%		½ of 1%
ELEVATOR CONSTRUCTORS:					
Constructors	12.13	1.04	.69	a+b	.035
Helpers	70%JR	1.04	.69	a+b	.035
IRONWORKERS	12.20	.80	1.15	2.00	.04
LABORERS:					
Laborers	9.70	.75	.50		.04
Chipping Hammers; Concrete Mixers, Green Cutter (Air, Electric or Gas), Material Mixers, Mortar Mixers, Motor driven buggy Opr., sandblasters, Tamping machines, vibrator Oprs.,	9.80	.75	.50		.04
MILLWRIGHTS	13.59	.75	.90		.02
PAINTERS:					
Brush & Glaziers	11.00	.60			.05
PILEDRIVERMEN	11.14	.60	.80		.02
PLASTERERS	11.41	.75	.60		.02
PLUMBERS & STEAMFITTERS	14.03	.70	.80		.02
ROOFERS	11.05	.70	.50		
SHEET METAL WORKERS	10.47	.81	.99	1.50	.05
SPRINKLER FITTERS	14.30	.85	1.20		.08
TILE-MARBLE & TERRAZZO WORKERS	11.41	.75	.60		.02
TRUCK DRIVERS:					
Regular	10.04	b31.00	b27.00		
Heavy Duty, double axle and semi	10.17	b31.00	b27.00		
Euclid type equipment	10.40	b31.00	b27.00		

DECISION No. MI80-2064 Page 2

	Basic Hourly Rates	Fringe Benefits Payments			
		H & W	Pensions	Vacation	Education and/or Appr. Tr.
Power Equipmnet Operators Regular Equipment Operator Crane, Dozer, Front End Loaders Job Mechanic	$9.95	.95	1.50	11%	.02
Air Track Drill, Boom Truck Concrete Mixers, Fork Truck, Material Hoist and Tugger, Pump, 6" andover, Pumcrete, Belt Crete, Squeeze crete, Sweeping Machine, Trencher, Winches, Well Points and Freeze Systems	8.86	.95	1.50	11%	.02
Welders - receive rate prescribed for craft performing operation to which welding is incidental					

PAID HOLIDAYS: (WHERE APPLICABLE)

A New Year's Day; B-Memorial Day; C-Independence Day; D-Labor Day; E-Thanksgiving Day; F-Day after Thanksgiving Day & G-Christmas Day

FOOTNOTES:

a. 7 paid holidays; A through G

b. Employer contributes 8% of regular hourly rate to vacation credit for employee who has worked in business more than 5 years. Employer contributes 6% of regular hourly rate to vacation pay credit for employee who has worked in business less than 5 years.

c. Per week, Per employee

Unlisted classifications needed for work not included within the scope of the classifications listed may be added after award only as provided in the labor standards contract clauses (29 CFR, 5.5 (a)(1)(ii))

SUPERSEDEAS DECISION

STATE: Michigan COUNTIES: See Below
DECISION No. MI80-2065 DATE: Date of Publication
Supersedes Decision No.MI79-2015, dated May 4, 1979 in 44 FR 26443
DESCRIPTION OF WORK: Building (Does not include single family homes and garden type apartments up to and including four stories) and Heavy (excluding, Bridge, Airport and Sewer,) Construction Projects

COUNTIES: Allegan, Berrien Calhoun, Clinton, Eaton Ingham, Jackson & Kalamazoo	Basic Hourly Rates	Fringe Benefits Payments			
		H & W	Pensions	Vacation	Education and/or Appr. Tr.
ASBESTOS WORKERS:					
Berrien County	$14.63	.80	1.00		
Remaining Counties	12.60	1.05	1.78		.02
BOILERMAKERS	13.065	1.28	1.30	2.00	.03
BRICKLAYERS & STONEMASONS:					
Allegan County (Casco, Clyde Ganges and Lee Townships) and Berrien County	12.35	.95	1.05		
Allegan County (Allegan, Cheshire, Gun Plain, Martin, Otsego, Trowbridge, Valley, and Watson Townships) and Kalamazzo County	11.41	1.15	.35		.09
Allegan County (Remainder)	10.80	.75	.35		.04
Calhoun County and Bellevue, Carnel, Kalamo, and Walton Townships in Eaton County	13.30	.85	.75		
Clinton and Hingham (except Onondaga, Leslie, Bunker Hill and Stockbridge Townships) Counties and the remainder of Eaton County	13.70		1.10		.01
Jackson County and remainder of Ingham County	14.25	1.10	.80		
CARPENTERS:					
Berrien County (chickaming, New Buffalo and Three Oaks Townships)	14.55	1.05	.82		.15
Clinton, Eaton (except Bellevue, Walton, Kalamo and Vermontville Townships), Ingham & Jackson Counties	13.22	.75	.90		.05
Remaining Counties and the remainder of Berrien and Eaton Counties	11.99	.75	.90		.10

DECISION MI80-2065

Page 2

	Basic Hourly Rates	Fringe Benefits Payments			
		H & W	Pensions	Vacation	Education and/or Appr. Tr.
CEMENT MASONS:					
Kalamazoo County: Calhoun Co; Allegan Co., (Twps of Allegan, Cheshire, Gunn Plain, Martin, Otsego, Trowbridge, Valley & Watson)	$10.77	1.15	.35		.02
Allegan County (Casco, Ganges & Lee Townships) and Berrien County	11.50	.95	1.05		.02
Remainder of Allegan County	9.72	.70	.75		.02
Remainder of Counties	10.40	.60	.50		.02
ELECTRICIANS:					
Allegan County (Laketon, Fillmore, Leighton Townships	12.85	.75	3%+.35		.01
Allegan County (Remainder) and Kalamazzo County	13.58	.75	9½%		.01
Berrien County	13.79	4.8%	7%		.5%
Calhoun County and Sunfeild, Vermontville, Kalamo, Bellevue Eaton and Brookfield townships in Eaton County	13.70	.75	9%		.01
Clinton and Ingham (except Onondaga, Leslie, Stockbridge and Bunker Hill Townships) Counties and the remainder of Eaton County	13.87	.75	1.50		.5%
Jackson County	13.07	1.00	.70	10%	.26
Remainder of Ingham County	13.07	1.00	.70	10%	.26
ELEVATOR CONSTRUCTORS:					
Allegan, Kalamazzo, and Calhoun Counties:					
Constructor	10.81	.745	.56	a	.025
Helper	70%JR	.745	.56	a	.025
Berrien County:					
Constructor	13.26	1.195	.82	a	.035
Helper	70%JR	1.195	.82		

DECISION MI80-2065

Page 3

ELEVATOR CONSTRUCTORS (CONT'D)	Basic Hourly Rates	Fringe Benefits Payments			
		H & W	Pensions	Vacation	Education and/or Appr. Tr.
Eaton, Ingham & Jackson Counties:					
Constructor	$12.41	.745	.56	a	.025
Helper	70%JR	.745	.56	a	.025
GLAZIERS:					
Kalamazoo, Calhoun & So. Part of Allegan Cos.	11.75		.15		
Clinton, Eaton, Ingham Jacksdn Counties	9.64	.55	.70		.02
IRONWORKERS:					
Berrien County	13.00	1.00	2.13		.03
Clinton, Ingham & Jackson Cos. Structural & Ornamental	13.90	9%	17%	18%	.09
Fence Erectors	11.59	9%	17%	18%	.09
Reinforcing	12.08	.98+.50	19%	19%	.12
Remaining Counties	13.08	6%	8%		.10
LATHERS:					
Ingham & Jackson Counties	13.02	1.06	.30		.01
Calhoun County	12.22	1.06	.30		.01
MARBLE TILE & TERRAZO WORKERS					
Allegan Co. (Gun Plain Otsego, Trowbridge Valley, Allegan, Cheshire, Martin and Watson Townships) and Kalamazoo County	10.75	.90			.05
Remainder of Allegan Co.	10.05	.75	.35		
Clinton, Ingham (except Onondaga, Leslie, Bunker Hill, and Stockbridge Townships) and Eaton (except Kalamo, Carmel, Bellevue, and Walton Townships) Counties	12.68		1.10		
Calhoun co. & Bellevue, Carmel, Kalamo & Walton Twps. in Eaton County					
Marble Setters	13.30	.85	.75		
Tile & Terrazzo Workers	10.52	.85	.35		
Jackson County and the Remainder of Ingham County					
Tile & Terrazzo Workers	12.82	1.10	.80		
Marble Setters	14.25	1.10	.80		

DECISION No. MI80-2065 Page 4

	Basic Hourly Rates	Fringe Benefits Payments			
		H & W	Pensions	Vacation	Education and/or Appr. Tr.
PAINTERS:					
Allegan Co. (Northern Portion					
Brush	$10.30	.50	.25		.02
Spray	11.05	.50	.25		.02
Allegan County (S,E.½) and Kalamazoo County					
Brush; Drywall Taping; Pan Roller	10.45		.40		
Swing Stage: Structural Steel	11.10		.40		
Spray	11.35		.40		
Berrien County:					
Brush	11.60				
Structural Steel 12% of scale					
Calhoun County:					
Brush; Roller	10.35		.25		
Clinton, Eaton & Ingham Counties					
Brush and Roller & Tapers	13.00	.65	.40		.0025
Structural Steel	13.40	.65	.40		.0025
Spray & Sandblasting	13.75	.65	.40		.0025
Jackson County:					
Brush & Roller	12.10	1.01	1.35	1.15	50.00p/y
Spray	12.60	1.01	1.35	1.15	50.00p/y
Drywall Taper	12.35	1.01	1.35	1.15	50.00p/y
PLASTERERS:					
Allegan County (Casco, Clyde, Ganges and Lee Townships) and Berrien Tounty	11.75	.95	1.05		
Remainder of Allegan County and Remaining Counties	12.22	.80	1.00		.03
PLUMBERS:					
Allegan County (Northern Tier Townships)	12.09	.60+.15	.90		.05
Allegan County (Remainder) and Kalamazoo County	11.71	.60	.86		

DECISION No. MI80-2065 Page 5

	Basic Hourly Rates	Fringe Benefits Payments			
		H & W	Pensions	Vacation	Education and/or Appr. Tr.
PLUMBERS (CONT'D)					
Berrien County (except of Niles and vicinity)	$13.04	1.22	.90		
City of Niles and Cicinity in Berrien County	13.58	.75	.95		.10
Calhoun County and Bellevue, Olivet, Hastings and Char Charlotte in Eaton County	14.36	1.56	1.50		
Clinton and Ingham Counties and Sunfeild, Roxand, Oneida, Delata and Windson Townships in Eaton County	13.11	.75	1.25		
Jackson County	13.05	.87+.30	1.10		.02
ROOFERS:					
Jackson County					
Composition	10.65	.94	.65	1.05	.10
Slate & Tile	11.68	.94	.65	1.05	.10
Allegan County					
Built-Up	8.65	.90	.35	1.20	
Slate, Tile & Asbestos	8.90	.90	.35	1.20	
Calhoun and Kalamazoo Counties:					
Composition	12.20			.35	
Slate, Tile & Asbestos	12.45			.35	
Clinton, Eaton and Ingham Cos.	10.20		.70	.70	
SHEET METAL WORKERS:					
Berrien County	12.88	.75	.615		.07
Remaining counties	14.30	1.14	1.51		.08
SOFT FLOOR LAYERS:					
Allegan, Berrien (except Chickming, New Buffalo and Three Oaks Townships), Calhoun, Kalamazoo Counties and Bellevue, Vermontville, Kalmo and Walton Townships in Eaton County	9.70	.60	.80		.01
Clinton and Hingham Counties and remainder of Eaton County	11.34	.75	.80		.01
Jackson county	13.22	.75	.80		.01
Chickaming, 3 Oaks & New Buffalo Twps. in Berrien Cos.	13.00	.65	1.00		.05

	Basic Hourly Rates	Fringe Benefits Payments			
		H & W	Pensions	Vacation	Education and/or Appr. Tr.
SPRINKLER FITTERS	$14.61	.85	1.20		.08
TRUCK DRIERS:					
Allegan, Berrien and Kalamazoo Counties:					
8 cu yds. & under	8.84	b24.00	b22.00		
8 cu yds. & over	9.00	b24.00	b22.00		
Low Boys Semis	9.11	b24.00	b22.00		
Calhoun County	7.95	b21.00	b12.00	.20	
Less than 8 cu. yds.	7.95	b21.00	b12.00	.20	
8 cu. yds, and over; Semi Tandem	8.05	b21.00	b12.00	.20	
Clinton, Eaton and Ingham Cos. 8 cu yds. & under	8.61	b31.00	b37.00	c	
Truck Drivers on dump trucks 8 cu. yds. Capacity and over pole trailers	8.71	b31.00	b37.00	c	
Low boys drivers; Double bottom drivers	8.81	b31.00	b37.00	c	
Jackson County	5.95	b24.00	b22.00		
Welders receive rate prescribed for craft performing operation to which welding is incidental.					

Unlisted classifications needed for work not included within the scope of the classifications listed may be added after award only as provided in the labor standards contract clauses (29 CFR, 5.5 (a)(1)(ii)).

PAID HOLIDAYS (WHERE APPLICABLE)

A-New Year's Day; B-Memorial Day; C-Independence Day; D-Labor Day; E-Thanksgiving Day; F-Day after Thanksgiving; G-Christmas Day

FOOTNOTES:

a. Employer contributes 8% of regular hourly rate to vacation pay credit for employee who has worked in business less than 5 years, 6% contribution for more than 5 years, plus 7 paid holidays - A through G

b. Per week, Per employee

c. One year's service, one week vacation; 3 years service, two weeks vacation

DECISION No MI80-2065 Page 8

LABORERS:	Basic Hourly Rates	Fringe Benefits Payments			
		H & W	Pensions	Vacation	Education and/or Appr. Tr.
Allegan, Berrien, Calhoun and Kalamazoo Counties					
GROUP 1	$ 9.10	.75	.50	.55	.04
GROUP 2	9.25	.75	.50	.55	.04
GROUP 3	9.35	.75	.50	.55	.04
GROUP 4	9.60	.75	.50	.55	.04
Clinton, Eaton and Ingham Counties					
GROUP 1	8.75	.65	.35	a	.04
GROUP 2	8.83	.65	.35	a	.04
GROUP 3	8.89	.65	.35	a	.04
GROUP 4	9.04	.65	.35	a	.04
GROUP 5	8.99	.65	.35	a	.04
GRPUP 6	9.11	.65	.35	a	.04
GROUP 7	9.365	.65	.35	a	.04
Jackson County					
GROUP 1	9.48	.65	.35	.88	.04
GROUP 2	9.98	.65	.35	.88	.04

LABORERS:

Allegan, Berrien, Calhoun and Kalamazzo Counties
Group 1 - All construction laborers on buildings and Heavy Construction Pumps and Well Wheels
Group 2 - Plasterer Tenders, Material Mixers, Operators of Portable Mixers; Air, Electric or Gasoline Tools; Motor Driven Buggies; Swing Scaffolds
Group 3 - Jackhammer Oprs., Crocklayers & Caisson Workers in Building
Group 4 - Top men on Chimney or Towers over 30' in height

Clinton, Eaton and Igham Counties
Group 1 - Building Laborers
Group 2 - Mortar Mixers, hand or machine
Group 3 - Plasterer Tenders; Portable concrete mixer Opr., (14 and under); Air, Electric or Gasoline Tools; Tar Kettle tenders; Gasoline vibrators; Concrete gas buggies; concrete saw; Signal men and top men
Group 4 - Tunnel men; concrete shovelers; Car pushers, etc.
Group 5 - Windlass Operator (on caisson work)
Group 6 - Crock Layers (or pape layers); Caisson workers; Tunnel muckers
Group 7 - Tunnel Miners

Jackson County
Group 1- General Laborer
Group 2- Jackhammer and Acetylene Torch

FOOTNOTE:
a. - 5.00 per day

DECISION No. MI80-2065 Page 9

LC ZONE I

LINE CONSTRUCTION WILLIAMSTON, LOCKE, LEROY, WHEATFIELD & WHITE OAK TOWN SHIPS IN INGHAM COUNTY	Basic Hourly Rates	Fringe Benefits Payments			
		H & W	Pensions	Vacation	Education and/or Appr. Tr.
Linemen - Technician	$14.38	1.50	9%		½%
Cable Splicer	15.00	1.50	9%		½%
Combination Equipment Oprs. & Groundman	11.52	1.50	9%		½%
Combination Driver & Groundmen	10.84	1.50	9%		½%
Groundman	9.98	1.50	9%		½%

LC ZONE II

LINE CONSTRUCTION: ZONE II REMAINING COS: & THE REMAINDER OF INGHAM COS.	Basic Hourly Rates	Fringe Benefits Payments			
		H & W	Pensions	Vacation	Education and/or Appr. Tr.
Lineman; - Technician	$12.50	.45	3%+4%	a+5%	.5%
Cable Splicer	13.01	.45	3%+4%	a+5%	.5%
Combination Digger Oprs., Tractor Oprs., Groundman	9.75	.45	3%+4%	a+5%	.5%
Light Equipment Opr., Groundman; Distribution Line Truck Driver Operator - Groundman	8.56	.45	3%+4%	a+5%	.5%
Combination Winch Truck Driver Groundman:	8.17	.45	3%+4%	a+5%	.5%
Combination Truck Driver Groundman	6.92	.45	3%+4%	a+5%	.5%

FOOTNOTE:

a. 7 paid Holiday; New Year's Day; Memorial Day; Independence Day; Labor Day; Thanksgiving Day; Day after Thanksgiving Day; and Christmas Day.

MICH-3-PEO-1-2

POWER EQUIPMENT OPERATORS: BUILDING & HEAVY CONSTRUCTION	Basic Hourly Rates	Fringe Benefits Payments			
		H & W	Pensions	Vacation	Education and/or Appr Tr
CLASS A	$13 55	95	1 50		05
CLASS B	13 30	95	1 50		05
CLASS C	12 80	95	1 50		05
CLASS D	11 65	95	1 50		05
CLASS E	11 45	95	1 50		05
CLASS F	10 25	95	1 50		05
CLASS G	9 55	95	1 50		05

CLASS A - Crane with main boom & jib 220' or longer

CLASS B - Crane with main boom & jib 140' or longer, tower cranes, gantry cranes, whirley derrick

CLASS C - Regular equipment operator, cranes, stiff leg derrick, scraper, dozer, grader, front end loader, hoist, job mechanic & head grease man

CLASS D- Air Tugger (single drum), Material Hoist, Boiler Oprs, Sweeping Machine, winch Truck, Bob Cat & Similar type equipment, Fork Truck (over 20' lift)

CLASS E - Pump 6" or over, Well Points, Freeze systems, Boom truck (non Swinging) Fork Truck (20' Lift)

CLASS F - Air Compressor, Welder, Generators, Pumps under 6', Grease Man, Conveyors

CLASS G - Oiler, Firemen & Heater operator

MICH-2-PEO-SE

POWER EQUIPMENT OPERATORS: STEEL ERECTION CLINTON, INGHAM & JACKSON COS	Basic Hourly Rates	Fringe Benefits Payments			
		H & W	Pensions	Vacation	Education and/or Appr Tr
CLASS A	$11.57	55	75	10%	05
CLASS B	11 33	55	75	10%	05
CLASS C	10 85	55	75	10%	05
CLASS D	10 70	55	75	10%	05
CLASS E	9 61	55	75	10%	05
CLASS F	8 65	55	75	10%	05

CLASS A - Engineer when operation combination of boom jib 220' or longer
CLASS B - Engineer when operating combination of boom & jib 140" or longer Tower crane & derrick operator (where operators work stations is 501 or more above first sub level)
CLASS C - Crane operator job mechanic
CLASS D - Hoisting operator
CLASS E - Compressor (or welder) operator
CLASS F - Oiler or fireman

MICH-6-PEO-SE

POWER EQUIPMENT OPERATORS: STEEL ERECTION REMAINING COUNTIES	Basic Hourly Rates	Fringe Benefits Payments			
		H & W	Pensions	Vacation	Education and/or Appr Tr
CLASS A	$13 90	95	1 50	-	05
CLASS B	13 65	95	1 50		05
CLASS C	13 15	95	1 50		05
CLASS D	12 00	95	1 50		05
CLASS E	10 75	95	1 50		05
CLASS F	9 55	95	1 50		05

CLASS A - Crane operator w/main boom & jib 220' or longer
CLASS B - Crane operator w/main boom & jib 140' or longer; power cranes, gantry crane; whirley derrick
CLASS C - Regular equipment operator; crane, dozer, loader; hoist, straddle wagon, Job mechanic
CLASS D - Air tugger (single drum); material hoist, pump 6" or or over
CLASS E - Air compressor, welder, generators-conveyors
CLASS F - oiler & Fireman

DECISION No. MI80-2065

MICH-8-PEO-U

POWER EQUIPMENT OPERATORS: UNDERGROUND CONSTRUCTION CALHOUN, CLINTON, EATON INGHAM & JACKSON COUNTIES	Basic Hourly Rates	Fringe Benefits Payments			
		H & W	Pensions	Vacation	Education and/or Appr. Tr.
CLASS I	$10.61	.80	1.00	10%	.05
CLASS II	10.49	.80	1.00	10%	.05
CLASS III	9.83	.80	1.00	10%	.05
CLASS IV	9.31	.80	1.00	10%	.05

CLASS I - Power shovel, crane (crawler, truck type or pile driving), dragline, backhoe, calmshell, trencher (over 8" digging capacity), mechanic, endloader (over 1½ cu. yd. cap.), grader, scraper (self-propelled or tractor drawn), dozer (9' blade & over), concrete paver (2 drum or larger), side boom tractor (type D-4 or equivalent & larger), elevating grader, roller (asphalt), gradall (and similar type machine), batching plant operator (concrete), backfiller tamper, well drilling rig, slip from paver slope paver, conveyor loader (euclid type)

CLASS II - Trencher (8' digging capacity & smaller), endloader (1½ cu. yd. capacity & smaller), dozer (less than 9' blade), side boom tractor (smaller than type D-4 or equivalent), pump (1 or more 6" discharge or larger - gas or diesel powered or powered by generator of 300 amps or more inclusive of generator), hoist, boom truck (power sing type boom), tractor(pneu-tired, other than backhoe or front endloader), crusher

CLASS III - Air compressor (2 or more - less than 600 CFM), air compressors 600 cu. ft. per min. or larger), pumperete machine (and similar equipment), mechanic helper, maintenance man, boom truck (non-swinging, non powered type boom), welding machine or generator (2 or more - 300 amp. or larger gas or diesel powered), pump (2 or more - 4" up to 6" discharge - gas or diesel powered - excluding submersible pumps), concrete paver (1 drum ½ cu. yd. or larger wagon drill (multiple), elevator (other than passenger), concrete breaker (self-propelled or truck mounted - includes compressor)

CLASS IV - Hydraulic pipe pushing machine, pumps (2 or more up to 4" discharge if used 3 hours or more a day gas or diesel powered - excluding submersible pumps), trencher (service), boiler, vibrating compaction equipment, self propelled (6' wide or over), stump remover, mulching equipment, farm tractor (with attachment), finishing machine (concrete), roller (other than asphalt), curing machine (self-propelled), concrete saw (40 H.P. or over)

MICH-9-PEO-U

POWER EQUIPMENT OPERATORS: UNDERGROUND CONSTRUCTION REMAINING COUNTIES	Basic Hourly Rates	Fringe Benefits Payments			
		H & W	Pensions	Vacation	Education and/or Appr. Tr.
CLASS I	$ 9.24	.80	1.00	10%	.05
CLASS II	8.98	.80	1.00	10%	.05
CLASS III	8.52	.80	1.00	10%	.05
CLASS IV	8.27	.80	1.00	10%	.05

CLASS I - Power shovel, crane (crawler, truck type or pile driving), dragline, backhoe clamshell, trencher (over 8" digging capacity), mechanic, endloader (over 1½ cu. yd. cap.), grader, scraper (self-propelled or tractor drawn), dozer (9' blade or over), concrete paver (2 drum or larger), side boom tractor (type D-4 or equivalent & larger), elevating grader, roller (asphalt), gradall (and similar type machine), batching plant operator (concrete), backfiller tamper, well drilling rig, slip from paver slope paver, conveyor loader (euclid type)

CLASS II - Trencher (8' digging capacity & smaller), endloader (1½ cu. yd. capacity & smaller), dozer (less than 9' blade), side boom tractor (smaller than type D-4 or equivalent), pump (1 or more 6" discharge or larger - gas or diesel powered or powered by generator of 300 amps or more inclusive of generator), hoist, boom truck (power sing type boom) tractor (neu-tired, other than backhoe or front endloader, crusher

CLASS III - Air compressor (2 or more - less than 600 CFM), air compressors 600 cu. ft. per min, or larger), pumperete machine (and similar equipment), mechanic helper, maintenance man, boom truck (non-swinging, non powered type boom), welding machine or generator (2 or more - 300 amp. or larger gas or diesel powered), pump (2 or more - 4" up to 6" discharge - gas or diesel powered - excluding submersible pumps), concrete paver (1 drum ½ cu. yd. or larger wagon drill (multiple), elevator (other than passenger), concrete breaker (self-propelled or truck mounted - including compressor)

CLASS IV - Hydraulic pipe pushing machine, pumps (2 or more up to 4"discharge if used 3 hours or more a day gas or diesel powered - excluding submersible pumps), trencher (service), boiler, vibrating compaction equipment, self propelled (6' wide or over), stump remover, mulching equipment, farm tractor (with attachment), finishing machine (concrete), roller (other than asphalt), curing machine (self-propelled), concrete saw (40 H.P. or over)

SUPERSEDEAS DECISION

STATE: Michigan

COUNTIES: Genesee, Lapeer, Saginaw, St. Clair & Shiawassee

DECISION NUMBER MI80-2067

DATE: Date of Publication

Supersedes Decision Number MI79-2017 dated May 4, 1979 in 44 FR 26455

DESCRIPTION OF WORK: Residential Construction Projects consisting of single family Homes and apartments up to and including 4 stories.

	Basic Hourly Rates	Fringe Benefits Payments			
		H & W	Pensions	Vacation	Education and/or Appr. Tr.
ASBESTOS WORKERS:					
St. Clair County	$13.85	1.61	1.69		.07
Remainder of Counties	12.60	1.05	1.78		.02
BOILERMAKERS	13.065	1.28	1.30	2.00	.03
BRICKLAYERS:					
Genesee, Lapeer & Shiawassee	12.45	.80	1.30		
Saginaw County	12.77	1.05	.95		
St. Clair County	9.75	1.30	1.10		
CARPENTERS:					
Saginaw County & Remaining Cos.	8.37	.60	.80		.02
St. Clair	12.78	1.00	11%	11%	.04
CEMENT MASONS:					
Genesse & Shiawassee Cos.	10.80	.70	.75		.02
Lapeer County	11.10	.80	1.30		
Saginaw County	12.07	1.05	.95		
St. Clair County	9.09	1.30	1.10		
ELECTRICIANS:					
Genesee, Lapeer & Shiawassee Cos.	7.28	.40	3%+.75		.02
Saginaw Cos.	9.33		3%+.15		½ of 1%
St. Clair County	14.40	1.65	3%+1.20	-	.05
ELEVATOR CONSTRUCTORS:					
St. Clair County					
Constructors	12.475	.745	.56	a	.025
Helpers	70%JR	.745	.56	a	.025
Remainder of Counties					
Constructors	11.21	.745	.56	a	.025
Helpers	70%JR	.745	.56	a	.025
GLAZIERS:					
Genesee, Lapeer & Shiawassee Cos.	9.64	.55	.70		.02
Saginaw County	9.15		.50	.25	.01
St. Clair County	9.77	.55	.65		
IRONWORKERS:					
Structural & Ornamental	13.90	9%	17%	18%	.09
Reinforcing	12.08	.98+.50	19%	19%	.12
Fence Erectors	11.59	9%	17%	18%	.09

	Basic Hourly Rates	Fringe Benefits Payments			
		H & W	Pensions	Vacation	Education and or Appr. Tr.
LABORERS:					
Saginaw County					
Laborers; Mortar Mixers (Hand)	$ 9.49	.65	.35		.04
Plaster Mixers & Tenders	9.69	.65	.35		.04
Genesee, Lapeer & Shiawassee Cos.					
Laborers	10.44	.75	.85		.04
Air, Gas & Electric Tool Oprs.	10.59	.75	.85		.04
Mortar Mixers	10.69	.75	.85		.04
Crock or Pipelayers	10.79	.75	.85		.04
St. Clair County					
Laborers; Mason Tenders	11.13	.65	.35		.04
Mortar Mixers	11.25	.65	.35		.04
Air, Gas & Electric Tool Oprs.	11.38	.65	.35		.04
Crock & Pipelayers	11.48	.65	.35		.04
LATHERS:					
Saginaw & Genesee Cos.	13.02	1.06	.30		.01
MARBLE TILE & TERRAZZO WORKERS:					
Genesee, Lapeer & Shiawasee Cos.	11.70	.80	1.30		
Saginaw County	12.20				
St. Calir County:					
Marble Masons	13.38	1.00	1.40		
Terrazzo Workers	12.42	1.00	1.40		
Tile Setters	12.88	1.00	1.40		
PAINTERS:					
Genesee & Eastern ¼ of Counties: West of Hwy. #53 inLapeer	10.70	.50	.70		10.00p/mo
St. Clair Co; & East of Hwy. #53 in Lapeer County	14.28	.65	.90		.01
Saginaw County	9.95		.35		.02
Western ¼ of Shiawasee Cos.	13.00	.65	.40		.0025
PLASTERERS:					
Saginaw County	11.29	.88	.20		
Genesee & Shiawasee Cos.	12.22	.80	1.00		.03
Lapeer County	11.35	.80	1.30		
St. Clair County	9.30	1.30	1.10		
PLUMBERS:					
Genesee, Lapeer & Shiawassee Cos.	14.44	1.17	1.70		.03
Saginaw County	12.87	1.09	1.50	1.25	.02
St. Clair County	12.00	1.25	1.60	1.90	.07

DECISION No. MI80-2067 Page 3

	Basic Hourly Rates	Fringe Benefits Payments			
		H & W	Pensions	Vacation	Education and/or Appr. Tr.
POWER EQUIPMENT OPERATORS:					
St. Clair County					
Regular Engineer	$12.49	.95	1.50	11%	.05
Regular Crane Operator	12.86	.95	1.50	11%	.05
Remainder of Counties					
Regular Equipment Operator: Scraper, Dozer; Grader, Front End Loader	12.80	.95	1.50		.05
Bob Cat & Similar Type Equip.,	11.65	.95	1.50		.05
air compressors; Generators	10.25	.95	1.50		.05
ROOFERS:					
Genesee, Lapeer & Shiawassee Cos.	12.25	.60	.60		
St. Clair County	9.95				
SHEET METAL WORKERS:					
Genesee, Lapeer & Shiawassee Cos.,	10.65	.79	1.20	1.00	
Saginaw County	12.86	.80	1.00		.03
St. Clair County	11.305	1.81	1.73	1.24	.12
SOFT FLOOR LAYERS:					
St. Clair County	11.49	1.00	7%	8%	.03
Remainder of County	11.34	.60	.80		.01
SPRINKLER FITTERS	14.61	.85	1.20		.08
TRUCK DRIVERS:					
Genesee, Lapeer, & Shiawassee Cos.,	9.60	b32.50	b37.00		
Saginaw County					
Truck drivers	9.40	b31.00	b37.00	.50	
8 Cubic yards & over	9.50	b31.00	b37.00	.50	
Euclid Type Equipment	9.70	b31.00	b37.00	.50	
St. Clair County					
Truck Drivers	11.05	b32.50	b37.00		
Semi Trucks	11.20	b32.50	b37.00		

FOOTNOTES:

a. 7 paid Holidays - New Year's Day - Memorial Day - Independence Day - Labor Day - Thanksgiving Day - Day after Thanksgiving - Christmas Day plus employer contributes 8% of regular hourly rate to vacation pay credit for employee who has worked in business more than 5 years and 6% for employees in business less than 5 years.

b. Per week; Per Employee plus $3.00 for dental & optical - H&W - T/D in Saginaw County, only

Unlisted classifications needed for work not included within the scope of the classifications listed may be added after award only as provided in the Labor standards contract clauses (29 CFR, 5.5 (a)(1)(ii)).

SUPERSEDEAS DECISION

STATE: New Hampshire COUNTIES: Hillsboro & Merrimack
DECISION NUMBER: NH80-2056 DATE: Date of Publication
Supersedes Decison No. NH78-2100, dated October 6, 1978 in 43 FR 46466
DESCRIPTION OF WORK: Building & Heavy Construction Projects

HILLSBORO COUNTY

BUILDING & HEAVY CONSTRUCTION	Basic Hourly Rates	Fringe Benefits Payments			
		H & W	Pensions	Vacation	Education and/or Appr. Tr.
ASBESTOS WORKERS	$12.81	1.20	1.10		.01
BOILERMAKERS	13.50	1.175	10%		.03
BRICKLAYERS, CEMENT MASONS, MARBLE SETTERS, PLASTERERS, STONE MASONS, TERRAZZO WORKERS, AND TILE SETTERS	9.89	1:01	.89		.01
CARPENTERS:					
Pelham:					
Carpenters & Soft floor Layers	11.95	1.00	1.00		.07
Millwrights	12.90	1.00	1.00		.10
Greenville:					
Carpenters & Soft Floor Layers	12.20	.75	1.00		.07
Millwrights	12.90	1.00	1.00		.10
Remainder of County:					
Carpenters & Soft Floor Layers	9.98	.65	.70		.03
Piledrivermen & Millwrights	10.83	.65	.70		.03
ELECTRICIANS:					
Pelham	12.37	.75	3%+.60		.02
Remainder of County	12.25	.65	3%		.03
ELEVATOR CONSTRUCTORS:					
Constructors	12.81	1.045	.82	a+b	.035
Helpers	8.97	1.045	.82	a+b	.035
GLAZIERS	9.47	.77	.69		.03
IRONWORKERS:					
Structural, Ornamental & Reinforcing	11.05	1.15	1.20		.02
LINE CONSTRUCTION:					
Linemen	9.34	.70	3%+.50	d	3/8of1%
Equipment Operator	8.74	.70	3%+.50	d	3/8of1%
Groundman	6.36	.70	3%+.50	d	3/8of1%
Driver Groundman	7.38	.70	3%+.50	d	3/8of1%
PAINTERS:					
Brush	9.10	.50			
Paperhangers	9.35	.50			
Spray & Sandblasting	10.60	.50			
Open Structural steel	10.35	.50			
Enclosed Structural Steel & Steeple Jack	9.60	.50			

DECISION NO. NH80-2056

	Basic Hourly Rates	Fringe Benefits Payments			
		H & W	Pensions	Vacation	Education and/or Appr. Tr.
PLUMBERS AND STEAMFITTERS:					
Hudson and Pelham	12.62	1.10	1.10		.02
Remainder of County	12.40	.83	.65		.02
ROOFERS:					
Roofers	7.80				
SHEET METAL WORKERS	10.72	.80	.80		.02
SPRINKLER FITTERS	12.06	.75	1.05		.08

DECISION NO. NH80-2056

BUILDING AND HEAVY CONSTRUCTION	Basic Hourly Rates	Fringe Benefits Payments			
		H & W	Pensions	Vacation	Education and/or Appr. Tr.
ASBESTOS WORKERS	12.81	1.20	1.10		.01
BOILERMAKERS	13.50	1.175	10%		.03
BRICKLAYER, CEMENT MASONS, MARBLE SETTERS, PLASTERERS, STONE MASONS, TERRAZZO WORKERS & TILE SETTERS	9.89	1.01	.89		.01
CARPENTERS & SOFT FLOOR LAYERS	9.98	.65	.70		.01
Millwrights & Piledrivers	10.83	.65	.70		.03
ELECTRICIANS:					
Hookset	12.25	.65	3%		.03
Remainder of County:					
Gen. Contracts $400,000 & over	11.75	.80	3%+.50		.02
General Contracts less than $400,000	8.05	.80	3%+.50		.02
ELEVATOR CONSTRUCTORS:					
Constructors	12.81	1.045	.82	a+b	.035
Helpers	8.97	1.045	.82	a+b	.035
GLAZIERS	9.47	.77	.69		.03
IRONWORKERS - Structural, Ornamental and Reinforcing	11.05	1.15	1.20		.02
LINE CONSTRUCTION:					
Linemen	9.34	.70	3%+.50	d	3/8of1%
Equipment Groundman	8.74	.70	3%+.50	d	3/8of1%
Groundman	6.36	.70	3%+.50	d	3/8of1%
Driver Groundman	7.38	.70	3%+.50	d	3/8of1%
PAINTERS:					
Brush	9.10	.50			
Open Structural Steel Work	10.35	.50			
Enclosed structural Steel Work & Steeplejack	9.60	.50			
Paperhangers	9.35	.50			
Spray & Sandblasting	10.60	.50			
PLUMBERS AND STEAMFITTERS	12.40	.83	.65		.02
ROOFERS	7.80				
SHEET METAL WORKERS	10.72	.80	.80		.02
SPRINKLER FITTERS	12.06	.75	1.05		.08

DECISION NO. NH80-2056

Welders - receive rate prescribed for craft performing operation to which welding is incidental

PAID HOLIDAYS

A-New Year's Day; B-Memorial Day; C-Independence Day; D-Labor Day; E-Thanksgiving Day; F-Christmas

FOOTNOTES:

a. Employer contributes 6% basic hourly rate for 5 years or more of service or 8% basic hourly rate for 6 months to 5 years of service as Vacation Pay credit.

b. Holidays: A through F

c. Holidays: A through F: Washington's Birthday, Christmas Eve and Good Friday, providing employee has worked 45 full days during the 120 calendar days prior to the holiday, and the regular scheduled work days immediately preceding and following the holiday

d. Holidays: B through F, provided the employee has been employed 5 working days prior to the holiday and provided the employee works the scheduled work days immediately preceding and following the holiday

e. Holidays: B, C, and E provided employee works the day before and after each holiday

DECISION NO. NH80-2056

LABORERS:	Basic Hourly Rates	Fringe Benefits Payments			
		H & W	Pensions	Vacation	Education and/or Appr. Tr.
Building Construction					
Laborers	8.07	.75	1.10		.10
Plasterers' Tenders	8.24	.75	1.10		.10
Pipelayers, Fence & Guard Rail Erectors	8.36	.75	1.10		.10
Pneumatic Tool Ops., Pavement Breakers, Drillers, Chipping Gun Op., Chipping Gun Op., Powdermen & Blasters	8.65	.75	1.10		.10
All other Pneumatic Tool Ops. on Boiler and Stack Work	9.11	.75	1.10		.10
Heavy Construction					
Laborers and Pipelayers	7.67	.60	.80	e	.10
Pneumatic Tool Op., Drillers, Concrete Vibrators, & Electric Chipping Machines	8.17	.60	.80	e	.10
Blasterers and Powdermen	8.42	.60	.80	e	.10

DECISION NO. NH80-2056 NH-1-PEO R

POWER EQUIPMENT OPERATORS
BUILDING CONSTRUCTION

	Basic Hourly Rates	Fringe Benefits Payments			
		H & W	Pensions	Vacation	Education and/or Appr. Tr.
CLASS 1	10.75	.95	.75	a	.05
CLASS 2	10.50	.95	.75	a	.05
CLASS 3	10.30	.95	.75	a	.05
CLASS 4	9.525	.95	.75	a	.05
CLASS 4	9.50	.95	.75	a	.05
CLASS 6	8.70	.95	.75	a	.05
CLASS 7	8.90	.95	.75	a	.05
CLASS 8	11.75	.95	.75	a	.05
CLASS 9	11.25	.95	.75	a	.05

CLASS 1 - Shovel, Crane, Dragline, Derrick, Backhoe, Elevator with Chicago Boom, Gradall, Elevating Grader, Front End Loader 6 yds. and over, Cherry Picker, Pile Driving Rigs, Concrete Road Pavers, all three Drum Hoisting and Trenching Machines
CLASS 2 - Rotary Drill with Mounted Compressor, Compressor House (3-6 comepressors), Rock and Earth Boring Machines excluding McCarthy and similar Drills, Graders, 4 yds. and over Front End Loader, Two Drum Hoists, High Fork Lifts with Capacity of 15' & over, Scrapers, Sonic Hammer, Vibratary Hammer
CLASS 3 - Bulldozers, Push Cats, Scrapers (tractor drawn), Asphalt Paver, Front End Loader 3/4 yds. to 4 yds., Well Driller, Mechanics, Pumpcrete Machines, Concrete Pumps and Similar Type Pumps, Engineer or Fireman on High Pressure Boiler (on job), Self Loading Batch Plant, Well Point Operators including installing, Engineer-in-charge of Power Grease Truck, all Automatic Elevators permanent or Temporary operated manually or by remote controls
CLASS 4 - Single Drum Hoist, Self powered Roller, Self Propelled Compactors, Power Pavement Breakers, Concrete Pavement Finishing Machines, Two Bag Mixers with Skip, Front End Loaders under 3/4 yds., McCarthy and similar Drills, Batch Plant not Self Loading, Bulk Cement Plants Self-Propelled Material Spreaders, A-Frame Trucks, Fork Lifts up to 15'
CLASS 5 - Compressor 315 Cubic ft. and over, (one or two), Pumps (4 inches & over total discharge) when total discharge is over 12 inches, Classification 3 will be paid, Tractor (without blade or Bucket) Drawing Roller Compactors or other Machines
CLASS 6 - Compressors (up to 315 cubic feet) Small Mixers, Pumps (up to 4 inches), Power Heaters, Welding Machines (when 3 or more heaters or Welding Machines are used on one Job, classification 4 rate will be paid), Conveyor Oiler including Helpers on Grease Trucks and Grease Trucks with Hand Greasing Equipment.
CLASS 7 - Oilers on Truck Cranes and Gradalls
CLASS 8 - Cranes with boom lengths of 200 feet or more
CLASS 9 - Crane with boom length of 150 feet or more

PAID HOLIDAYS: A-New Year's Day; B-Memorial Day; C-Independence Day; D-Labor Day; e-Thanksgiving Day; F-Christmas Day

FOOTNOTE: A. Holidays: A through F, Veterans Day, Washington's Birthday and Columbus Day.

DECISION NO. NH80-2056 NH 2-PEO-2-3-S

POWER EQUIPMENT OPERATORS
HEAVY CONSTRUCTION

	Basic Hourly Rates	Fringe Benefits Payments			
		H & W	Pensions	Vacation	Education and/or Appr. Tr.
CLASS 1	10.48	.95	75	a	.05
CLASS 2	10.19	.95	.75	a	.05
CLASS 3	9.96	.95	.75	a	.05
CLASS 4	9.33	.95	.75	a	.05
CLASS 5	8.965	.95	.75	a	.05
CLASS 6	8.36	.95	.75	a	.05
CLASS 7	11.05	.95	.75	a	.05

CLASS 1 - Shovels, Crawler & Truck Crane, Derricks, Backhoes, Trenching Machines, Elevating Graders, Gradalls, Piledrivers, Concrete Pavers, Engineers on Site Processing Plant, Dragline, Clamshell, Cableways
CLASS 2 - Rotary Drill (with mounted compressor), Compressor House (3 to 6 compressors) Rock and earth Boring Machine (excluding McCarthy and similar drills), Grader, Front End Loader (4 yds. or over)
CLASS 3 - Bulldozer, Push Cats, Scraper (Self propelled or tractor drawn), Self-Powered Asphalt Paver. (Front End Loader 3/4 to 4 yds.); Mechanics, Well driller, Pumpcrete Machine, Engineer or Fireman on High Pressure Boiler (on job) Self-loading Batch Plant (on job), Well Point Operators
CLASS 4 - Hoists, Conveyors, Self-powered Rollers and Compactors, Self-propelled Material Spreaders, Self-powered Concrete Finishing Machine Mixers (2 bag with skip), Front End Loader (Under 3/4 yd.), McCarthy & similar Drills, Batch Plant (not a self-loading), Bulk Cement Plant
CLASS 5 - Compressor (315 C.F. or over-one or two), Pump 4" or over, Tractor without blades, Drawing Sheeps-foot, Rubber Roller or other type Compactor including Machines for Pulverizing and aerating Soil
CLASS 6 - Compressor (up to 315 C.F.), Small Mixers with skip, Oiler Pumps up to 4", Grease Truck, Power Heaters, Welding Machines (when 3 or more Welding Machines Class 4 rate applied), A-Frame, Forklifts, (Where grease truck contains powered grease equipment, engineer in charge shall be paid Class 3 rate)
CLASS 7 - Crane with boom length of 200 feet or more including jib

PAID HOLIDAYS: A-New Year's Day; B-Memorial Day; C-Independence Day; E-Thanksgiving Day; F-Christmas Day

FOOTNOTE: a. Holidays: A through F; Washington's Birthday; Veteran's Day and Columbus Day

DECISION NO. NH80-2056

POWER EQUIPMENT OPERATORS
MARINE CONSTRUCTION

	Basic Hourly Rates	Fringe Benefits Payments			
		H & W	Pensions	Vacation	Education and/or Appr. Tr.
CLASS 1	13.41	1.18	1.15	a	.03
CLASS 2	13.36	1.18	1.15	a	.03
CLASS 3	13.29	1.18	1.15	a	.03
CLASS 4	13.29	1.18	1.15	a	.03
CLASS 5	12.23	1.18	1.15	a	.03
CLASS 6	11.22	1.18	1.15	a	.03
CLASS 7	9.97	1.18	1.15	a	.03
CLASS 8	9.97	1.18	1.15	a	.03
CLASS 9	10.54	1.18	1.15	a	.03

Booms over 150' including jib-additional $.25 per hour
Booms over 185' including jib-additional $.50 per hour
Booms 220' including jib-additional $.75 per hour
Booms over 275' including jib-additional $1.00 per hour

CLASS 1 - Power Shovel, Crane, Truck Crane, Derrick, Cherry Picker, Pile Driver, 2 or more Drum Machine, Lighter, Derrick Boat, Trenching Machine, Mechanical Hoists, Pavement Breaker, Cement Concrete Pavèr, Dragline, Hoisting Engine, Pumpcrete Machine, Elevating Grader, Shovel Dozer (except when pushing) Front End Loader, (except when pushing) Backhoe, Gradall, Cableway, Boring Machine, Rotary Drill Post Hole Hammer, Post Hole Digger, Fork Lift
CLASS 2 - Swinger Engine
CLASS 3 - Sonic or Vibratory Hammer, Grader, Scraper (over 21 yds. struck), Tandem Scraper Concrete Pump, Bulldozer, scraper (21 yds. or less)
CLASS 4 - Portable Steam Boiler, Portable Steam generator, Roller, Tractor, Mechanic (maintenance), Concrete Mixer with Side Loader
CLASS 5 - Assistant Engineer (fireman)
CLASS 6 - Pump, Compressor, Welding Machine, Heater (power driven), Valve Controlling Permanent Plant (air or steam), Wellpoint System, Auger (powered by independent engine and attached to pile driver), Hydraulic Saw, Generator, Lighting Plant, Syphon, Pulsometer, Concrete Mixer
CLASS 7- Oiler (other than truck crane and gradall)
CLASS 8 - Oiler on Scow
CLASS 9 - Oiler on Truck Crane and Gradall

PAID HOLIDAYS: (WHERE APPLICABLE)
A-New Year's Day; B-Memorial Day; C-Independence Day; D-Labor; E-Thanksgiving Day: F-Christmas Day

FOOTNOTE: A. Holidays: A through F; Washington's Birthday, Patriots Day, Columbus Day; & Veteran's Day; Provided the employee has worked 3 days during the week in which which the holidays falls and is available for work the days preceding the holidays.

DECISION NO. NH80-2056 NH -TD-1-2-3-L

TRUCK DRIVERS

	Basic Hourly Rates	Fringe Benefits Payments			
		H & W	Pensions	Vacation	Education and/or Appr. Tr.
CLASS 1	6.41	.80	.50	a	
CLASS 2	6.64	.80	.50	a	
CLASS 3	6.87	.80	.50	a	

CLASS 1 - Two Axle Equipment
CLASS 2 - Three Axle Equipment including Low Beds
CLASS 3 - Special Earth Hauling Equipment other than Conventionnl Type on the road Truck and Semitrailers Trailer Dumps.

PAID HOLIDAYS: A-New Year's Day; B-Memorial Day; c-Independence Day; D-Labor Day; E-Thanksgiving Day; F-Christmas Day

FOOTNOTE: A. Holidays: A through F, plus Washington's Birthday, Veteran's Day and Columbus Day; (provided employee works two days in the calendar week in which the holiday falls; reports for work the last day assigned prior to the holiday and the first assigned following the holiday)

Unlisted classifications needed for work not included within the scope of the classifications listed may be added after award only as provided in the labor standards contract clauses (29 CFR, 5.5 (a)(1)(ii)).

SUPERSEDEAS DECISION

STATE: VIRGINIA

COUNTIES: THE INDEPENDENT CITIES OF CHESAPEAKE, HAMPTON NEWPORT NEWS, NORFOLK, PORTSMOUTH AND VIRGINIA BEACH

DECISION NO.: VA80-3052

DATE: DATE OF PUBLICATION

Supersedes Decision No. 78VA-3100 dated December 8, 1978 in 43 FR 57794

DESCRIPTION OF WORK: Highway Construction (does not include bridges over navigable waters; tunnels; rest areas which include building structures; railroad construction; and paving associated with building construction).

	Basic Hourly Rates	Fringe Benefits Payments			
		H & W	Pensions	Vacation	Education and/or Appr. Tr.
ASPHALT RAKER	$ 4.44				
CARPENTERS, STRUCTURE	7.39				
CARPENTER HELPER, STRUCTURE	5.00				
CONCRETE FINISHER	5.61				
CONCRETE FINISHER HELPER	4.37				
ELECTRICIAN	11.05	.60	8%	a	1%
FIREMAN	6.10				
FORM SETTER	5.00				
GUARDRAIL/FENCE ERECTOR	4.50				
IRON WORKER, REINF.	7.75				
IRON WORKER, REINF. HELPER	4.75				
IRON WORKER, STRUCTURAL	9.90				
LABORER, UNSKILLED	3.69				
LANDSCAPE WORKER	3.55				
MASON, STRUCTURE	5.00				
MECHANIC	6.45				
PAINTER	6.75				
PAINTER, BRIDGE	7.46				
PILE DRIVER LEADSMAN	7.29				
PIPE LAYER	4.43				
ASPHALT DISTRIBUTOR OPERATOR	4.75				
ASPHALT PAVER OPERATOR	4.98				
BACKHOE OPERATOR	5.25				
BULLDOZER OPERATOR	5.41				
BULLDOZER OPERATOR (UTILITY)	5.50				
CONCRETE FINISH MACHINE OPERATOR	4.83				
CRANE, DERRICK, DRAGLINE OPERATOR (1 YD. & UNDER)	5.87				
CRANE, DERRICK, DRAGLINE OPERATOR (OVER 1 YD.)	8.18				
FORM GRADER OPERATOR	4.32				
LOADER OPERATOR (2 YDS. & UNDER)	4.83				
LOADER OPERATOR (OVER 2 YDS.)	5.00				
MOTOR GRADER OPERATOR (FINE GRADE)	5.95				

[FR Doc. 80-24446 Filed 8-14-80; 8:45 am]

BILLING CODE 4510-27-C

DECISION NO. VA80-3052

	Basic Hourly Rates	Fringe Benefits Payments			
		H & W	Pensions	Vacation	Education and/or Appr. Tr.
MOTOR GRADER OPERATOR (ROUGH GRADE)	5.67				
OILER GREASER	5.33				
PILE DRIVER OPERATOR	8.30				
POWER TOOL OPERATOR	3.95				
ROLLER OPERATOR (ROUGH)	4.38				
ROLLER OPERATOR (FINISH)	4.49				
SCRAPER PAN OPERATOR	4.59				
STABILIZER OPERATOR	4.35				
TRACTOR OPERATOR (UTILITY)	4.09				
TRUCK DRIVER, HEAVY DUTY (7 C.Y. & UNDER)	3.04				
TRUCK DRIVER, HEAVY DUTY (OVER 7 C.Y.)	4.00				
TRUCK DRIVER (MULTI-REAR AXLE)	3.86				
TRUCK DRIVER (SINGLE-REAR AXLE)	3.40				

Unlised classifications needed for work not included within the scope of the classifications listed may be added after award only as provided in the labor standards contract clauses (29 CFR. 5.5 (a(1)(ii)).

FOOTNOTE:

a. Two hours off with pay on State and National Election Days.

Federal Register

Friday
August 15, 1980

Part III

Department of Agriculture

Food and Nutrition Service

Food Stamp Workfare Demonstration Project

DEPARTMENT OF AGRICULTURE

Food and Nutrition Service

7 CFR Part 282

[Amendment No. 175]

Amendments to the Demonstration Research and Evaluation Projects; Food Stamp Workfare Demonstration Project

AGENCY: Food and Nutrition Service, USDA.

ACTION: Emergency final rule.

SUMMARY: This rulemaking amends the Workfare Demonstration Project rules issued November 28, 1978 in the Federal Register (43 FR 55334) by the Departments of Agriculture and Labor, as joint administrators of this project. Section 17(b)(2) of the Food Stamp Act of 1977 as amended, was amended by Pub. L. 96-249 (94 Stat. 357, May 26, 1980) to extend the operation of the project through the fiscal year ending September 30, 1981, and further to provide for 50 percent Federal reimbursement of administrative costs associated with operation of the project. The amendment also directs the Secretary of Agriculture to designate at least one pilot project to implement a ten-day food stamp work registration job seeking period in lieu of the current thirty-day period.

EFFECTIVE DATE: The funding provision of Pub. L. 96-249 (§ 282.10(i)) is effective as of May 26, 1980. Other amended provision are effective immediately upon publication.

COMMENT PERIOD: Comments must be received on or before October 14, 1980 to be assured of consideration.

ADDRESS: Comments should be submitted to: Claire Lipsman, Director, Program Development Division, Family Nutrition Programs, Food and Nutrition Service, U.S. Department of Agriculture, Washington, D.C. 20250. All written comments will be open to public inspection at the Office of the Food and Nutrition Service, USDA, during regular business hours (8:30 a.m. to 5:00 p.m., Monday through Friday) at 500 12th Street, S.W., Washington, D.C., Room 672.

FOR FURTHER INFORMATION CONTACT: Claire Lipsman, Director, Program Development Division, U.S. Department of Agriculture, Room 658, 500 12th Street, S.W., Washington, D.C. 20250, Telephone: (202) 447-8325.

The Final Impact Statement describing the options considered in developing this final rule and the impact of implementing each option is available on request from the above named individual.

SUPPLEMENTARY INFORMATION: This final action has been reviewed under USDA procedures established in Secretary's Memorandum 1955 and under Department of Labor (DOL) procedures as specified in 44 FR 5576 to implement Executive Order 12044, and has been classified not significant.

Bob Greenstein, Administrator for the Food and Nutrition Service, has determined that an emergency situation exists which warrants publication without opportunity for a public comment period on this final action because the Workfare Demonstration Project is due to expire at the end of fiscal year 1981 and adequate time is needed for implementation and evaluation of project sites prior to the expiration date. For these reasons, the Secretary of Labor is also waiving the Department's regulation at 29 CFR 2.7 which states that it is DOL's policy to use proposed rulemaking procedures when issuing its regulations.

Further, pursuant to the administrative procedure provisions in 5 U.S.C. 553, it is found upon good cause that notice and other public procedure with respect to this emergency final action are impracticable and contrary to the public interest; and good cause is found for making this emergency final action effective less than 30 days after publication of this document in the Federal Register. Comments will be solicited on or before October 14, 1980, and this emergency final action will be scheduled for review so that a final document discussing comments received and any amendments required can be published in the Federal Register as soon as possible.

The Departments of Agriculture and Labor published regulations pertaining to the Administration of the Workfare Demonstration Project in the November 28, 1978 Federal Register. Under this project, qualifying food stamp registrants at selected pilot sites are required to perform work in a public service capacity, in exchange for the coupon allotment to which they are normally entitled.

Under the 1977 Food Stamp Act, the Secretary was authorized to establish 14 project sites, one urban and one rural in each of the seven administrative regions of the Food and Nutrition Service. Following the initial application period early in 1979 and a subsequent reopening of applications in September of that year, seven projects are now operational. Original authorizing legislation did not provide any Federal funds for administrative costs incurred by the political jurisdictions in operating Workfare projects. During the application periods the absence of operational funding was cited by responding political jurisdictions as a major factor in their decision not to submit an application. The total authorized complement of 14 sites was not achieved.

In order to provide a more adequate test of the Workfare concept, the Congress has authorized an extension of the test program through September 30, 1981. To further increase the number of project sites, the Congress also authorized Federal funding for 50 percent of project administrative costs to the political jurisdictions administering the pilot projects. This new funding authority, where none existed before, would apply to costs incurred by existing projects as of the date of enactment of the law. Project sites selected under the extending authority will be funded as negotiated in the grant agreement following site selection. The legislative history stresses that selection of the 14 sites is to be based upon uniform criteria and that the original seven sites will enjoy no special status, but should be judged on a par with all other project applicants. House Rept. No. 96-788, 96th Cong., 2d Sess., Feb. 27, 1980, p. 147.

Although the Departments are expected to adhere to the statutory directive for 14 projects, with one urban and one rural project in each Food and Nutrition Service region, the legislative history indicates that if in a given region this distinction cannot be achieved, two acceptable sites of the same type (e.g. two rural or two urban) can be selected to conduct Workfare projects during the extended period.

The 1977 legislation authorizing the Workfare projects required that the project design include a 30-day job seeking period under the food stamp work registration requirement (see 7 CFR 273.7) before eligible food stamp participants referred to the jobs component administrator of the project could be scheduled for assignment to job sites. Public Law 96-249 amends the 1977 legislation to require that the 30-day job seeking period be reduced to 10 days in at least one site. The Departments are concerned that changing one of the parameters of the project design in mid-course could affect the soundness of the results of the study on Workfare, and accordingly will limit use of the 10-day job seeking period to one site.

Therefore, Part 282 of Title 7 of the Code of Federal Regulations is amended to read as follows:

PART 282—DEMONSTRATION, RESEARCH AND EVALUATION PROJECTS

In § 282.10, changes are made as follows:

§ 282.10 Workfare Demonstration Project.

* * * * *

1. Paragraph (a) (*Authority*) is amended by adding the words ", as amended," after "Subsection 17(b)(2) of the Act".

2. Paragraph (d)(1)(iii) is amended to read as follows:

* * * * *

(d) * * *

(1) * * *

(iii) He or she has been unable to secure a job in the private sector after 30 days from the date of initial registration for work as required in § 273.7(a). Household members becoming exempt from work registration during this 30 day period shall not be required to participate in Workfare until such exemption ends, the member reregisters and 30 days lapse. An exception to the 30-day job seeking period will be made in one project designated by the Secretary of Agriculture. Under this exception, for Workfare purposes, the duration of time from the initial registration for work as required in § 273.7(a) until the time that the participant is eligible to be scheduled for a Workfare assignment will be reduced from 30 to 10 days; and

3. A new paragraph (i) is added to read as follows:

* * * * *

(i) *Funding* (1) Workfare sponsors will be reimbursed by the Department of Agriculture for 50 percent of all approved administrative costs involved in project operation. Such payments will be made on the basis of an approved budget and the negotiated grant agreement.

(2) Funding for project operations by the Department of Agriculture to a State food stamp agency shall be limited to the payment of coupon allotments to which food stamp households are otherwise entitled and of administrative costs attributable to normal food stamp program operations under the appropriate administrative formula. Food stamp administrative costs of the State food stamp agency at sites where a Workfare project is being operated (except as provided in paragraph (i)(3) of this section) are covered under normal certification and work registration activities.

(3) The cost of data compilations, such as the monthly report, required specifically of the Workfare sponsor or the State food stamp agency at the direction of the evaluation contractor (i.e., the contractor selected to evaluate the Workfare Demonstration Project) shall be fully reimbursed.

(91 Stat. 958 as amended—94 Stat. 357 (7 U.S.C. 2011–2027))

(Catalog of Federal Domestic Assistance Program No. 10551 Food Stamp)

Dated: July 8, 1980.

Carol Tucker Foreman,

Assistant Secretary of Agriculture.

Dated: August 7, 1980.

Ernest G. Green,

Assistant Secretary of Labor.

[FR Doc. 80-24561 Filed 8-14-80; 8:45 am]

BILLING CODE 3410-30-M

DEPARTMENT OF AGRICULTURE

Food and Nutrition Service

Food Stamp Program; Demonstration Research, and Evaluation Projects

AGENCY: Food and Nutrition Service, USDA.

ACTION: Notice of Intent to Solicit Applications for the Food Stamp Workfare Demonstration Project.

SUMMARY: On November 28, 1978, 43 FR 55334, the Department published in the Federal Register final rulemaking and a Notice of Intent for the Food Stamp Workfare Demonstration Project which was mandated by subsection 17(b)(2) of the Food Stamp Act of 1977. Under this project food stamp work registrants are required to perform work in a public service capacity in exchange for the coupon allotment to which their household is otherwise normally entitled.

A Notice of Intent was published on June 13, 1980 (45 FR 40094) advising the public of the extension of the Food Stamp Workfare Demonstration Project by Act of Congress (Pub. L. 96-249, 94 Stat. 357, May 26, 1980) for an additional year of project operations, and the addition of Federal funds to reimburse 50 percent of the operating costs incurred by the sponsoring political jurisdiction. We are today publishing final rulemaking and this Notice of Intent reopens the application period for 30 days.

DATE: Applications must be postmarked no later than September 15, 1980 to be assured of consideration.

FOR FURTHER INFORMATION CONTACT: Claire Lipsman, Family Nutrition Programs, Food and Nutrition Service, United States Department of Agriculture, Washington, D.C. 20250. (202) 447-8325.

SUPPLEMENTARY INFORMATION: The Departments of Agriculture and of Labor are today publishing Final Rulemaking in the Federal Register to implement the workfare amendments contained in the Food Stamp Act Amendments of 1980, and to reopen the application process for project sponsors. Applications should be mailed to: Claire Lipsman, Director, Program Development Division, United States Department of Agriculture, Room 658, 500 12th Street, S.W., Washington, D.C. 20250.

Dated: August 18, 1980.

David de Ferranti,

Associate Administrator.

[FR Doc. 80-24560 Filed 8-14-80; 8:45 am]

BILLING CODE 3410-30-M

Federal Register

Friday
August 15, 1980

Part IV

Environmental Protection Agency

Premanufacture Review Program; Proposed Processor Requirements

ENVIRONMENTAL PROTECTION AGENCY

40 CFR Part 720

[OPTS-80009; FRL 1533-6]

Premanufacture Review Program; Proposed Processor Requirements

AGENCY: Environmental Protection Agency (EPA).

ACTION: Proposed rule.

SUMMARY: In this notice, EPA is proposing a rule to require persons to submit notices under section 5 of the Toxic Substances Control Act (TSCA) when they process for a nonexempt commercial purpose those substances exempt from the TSCA Inventory and the Premanufacture Review Program. Section 5 requires persons to submit notices on new chemical substances and significant new uses of chemical substances. The Agency is proposing this processor notification rule to prevent the processing of exempt substances for TSCA commercial purposes without EPA review for risk to humans or the environment. This rule supplements the section 5 rules proposed on January 10 and October 16, 1979.

DATES: Written comments must be submitted by October 14, 1980. Public meetings-by-request: October 22 and 23, 1980—Washington, D.C.

ADDRESSES: All comments should bear the identifying notation OPTS-80009 and be addressed to: Document Control Officer, Office of Pesticides and Toxic Substances (TS-793), Rm. 447E, Environmental Protection Agency, 401 M Street, S.W., Washington, DC 20460.

After written comments are submitted EPA officials responsible for developing this proposal will be available to meet upon request with persons interested in discussing specific issue raised by this proposal. These public meetings-by-request will be held on Wednesday, October 22 and Thursday October 23, 1980, 1-5 pm in Room 2126 at EPA, Waterside Mall, 401 M Street, S.W., Washington, DC. Persons interested in participating should call the Industry Assistance Office (800-424-9065 or, in Washington 554-1404).

FOR FURTHER INFORMATION CONTACT: John Ritch, Director, Industry Assistance Office (TS-799), Environmental Protection Agency, 401 M Street, S.W., Washington, DC 20460, Toll free (800-424-9065), Washington, DC (554-1404).

SUPPLEMENTARY INFORMATION: This proposed rule is part of the section 5 proposed rulemaking under TSCA which was published in the Federal Register of January 10, 1979 (44 FR 2242) and reproposed in part by publication in the Federal Register of October 16, 1979 (44 FR 59764). The schedule for promulgation of this rule is as follows. In the summer of 1980 EPA will publish the Draft Economic Impact Analysis of the section 5 program, which will include an economic analysis of this processor reporting rule and its major alternatives. The Agency intends to make the rule final as part of the larger section 5 program in the fall of 1980, after comments on the economic analysis and its implications for this rule have been received and considered.

TSCA Inventory

The following review of EPA's Inventory and proposed section 5 rules will place this processor notification proposal in perspective. The Inventory reporting regulations (40 CFR Part 710) were promulgated under the authority of section 8(a) and (b) of TSCA (90 Stat. 2003; 15 U.S.C. 2601 et seq.). These regulations were published in the Federal Register of December 23, 1977 (42 FR 64572), and were clarified in the Federal Register of March 6, 1978 (43 FR 9254), April 17, 1978 (43 FR 16178), and May 15, 1979 (44 FR 28558). These regulations and clarifications implemented the Initial and Revised Inventory reporting schemes.

Reporting for the Initial Inventory was limited to persons who manufactured or imported in bulk chemical substances for a commercial purpose between January 1, 1975 and 30 days after publication of the Initial Inventory, the effective date of premanufacture notification under section 5 of TSCA. The Initial Inventory was published on June 1, 1979, and premanufacture notification under section 5 became effective on July 1, 1979. Reporting for the Revised Inventory began on July 1, 1979 and was limited to persons who processed or used a chemical substance for a commercial purpose after January 1, 1975, and persons who imported a chemical substance as part of a mixture or article for a commercial purpose after January 1, 1975. "Commercial purposes" includes the purposes of distribution in commerce and use as an intermediate under (40 CFR 710.2 (p) and (U) (42 FR 64572, 64576) and proposed § 720.2 (44 FR 2242, 2264)). "Process," "process for commercial purposes," and "processor" are defined in 40 CFR 710.2(t) through (v), (42 FR 64572, 64576), and include the preparation of a chemical substance or mixture in the same or a different form or physical state from that in which it was received. Persons were encouraged to report for the Revised Inventory those chemical substances not included on the Initial Inventory.

Although the Revised Inventory reporting period extended from July 1, 1979 through December 31, 1979, EPA announced that substances imported as part of a mixture or article, processed, or used for the first time after December 31, 1979 could be reported when such activity began, until 30 days after publication of the Revised Inventory (44 FR 28558, 28561). This announced policy is not affected by the rule proposed here.

Exempt Substances Under TSCA

The Inventory rules did not permit reporting of certain chemicals, including those not within the definition of "chemical substances" under TSCA section 3(2)(B) (i.e., substances used only as pesticides, tobacco and tobacco products, specified nuclear materials, foods, food additives, drugs, cosmetics, or devices under 40 CFR 710.2(h)). Byproducts (substances manufactured with no commercial purpose) and chemicals manufactured solely in small quantities for research and development could not be reported for the Initial Inventory under 40 CFR 710.4(c)(3) and (d)(2). In addition, EPA did not permit reporting of chemical substances which were manufactured or imported only prior to January 1, 1975, unless they were processed after that date under 40 CFR 710.4(c)(4). These chemicals which were excluded from Inventory reporting are collectively referred to in this notice as "exempt substances" or "substances manufactured for an exempt purpose." The terms also include substances which would be granted exemptions from section 5 notification under proposed 40 CFR 720.15 (44 FR 2268) because they are being manufactured or imported solely for test marketing purposes.

EPA considers those substances which were previously manufactured or imported solely for an exempt purpose to be subject to TSCA when they are processed for a nonexempt commercial purpose. The term "nonexempt commercial purpose" includes those purposes for which a section 5 notice must be submitted and is identical in coverage with the term "commercial purpose" as defined above. The term "nonexempt commercial purpose" is to be contrasted with "exempt purposes" and is used in this notice to clarify that commercial activity for an exempt purpose is excluded from section 5 notice requirements. EPA provided that substances manufactured or imported for undifferentiated commercial purposes, both for exempt and nonexempt commercial purposes, as

well as substances processed for nonexempt purposes, could be reported for the Inventory in 42 FR 64585–87 Comments 37–55 and 44 FR 2242, 2246.

Premanufacture Notice Provisions

The notification requirements of section 5 apply to any person who, after July 1, 1979, manufactures or imports in bulk for a nonexempt commercial purpose a substance that is not on the Inventory. EPA issued an interim policy concerning submission of notices, published in the Federal Register of May 15, 1979 (44 FR 28564), pending promulgation of the proposed section 5 rules. The Agency has stated that notice requirements for chemical substances imported for a commercial purpose as part of a mixture are to be effective 30 days after publication of the Revised Inventory under 40 CFR 710.3(b)(2) Note.

I. Proposed Processor Notification Rule

A. Substance of Proposed Rule

This rule would further implement the statutory directive in section 5 of TSCA that all new chemicals manufactured or imported for a nonexempt commercial purpose, or processed for a significant new use, undergo section 5 review. After the proposed rule is in effect, no person could process for a nonexempt commercial purpose a substance previously manufactured (or imported in bulk or as part of a mixture) for an exempt purpose, unless the person had submitted a notice in accordance with TSCA section 5. This requirement would supplement, but in no way supplant, the basic requirement under section 5(a)(1) that persons who intend to manufacture or import a new chemical substance for a nonexempt commercial purpose must submit a notice. The proposed processor notification requirement would apply only to those chemicals to be processed for a nonexempt commercial purpose which were previously manufactured or imported for an exempt purpose or were manufactured or imported only before January 1, 1975 and not processed after that date. The rule would apply both to processors who originally manufactured or imported the substance and to processors other than the original manufacturer or importer.

The proposed rule would cover nonexempt commercial processing of exempt substances domestically manufactured or imported in bulk or as part of a mixture. The Agency has not determined whether to apply section 5 requirements to new substances imported as part of an article and for the present will continue its current policy and not mandate notices for these substances. The Agency requests comments on whether it should require notification for the nonexempt commercial processing of chemical substances originally imported as part of an article.

The Agency proposes this processor notification rule to close a gap in its regulatory scheme which would allow "exempt" chemical substances to be processed for a TSCA commercial purpose without section 5 review. Without such a rule, persons could process for a TSCA commercial purpose an exempt substance, such as a byproduct or research and development (R&D) chemical, which was not on the Inventory and had never been reviewed for its risk to humans or the environment. Persons could also process exempt substances, such as pesticides and food additives, for a TSCA commercial purpose without prior health or environmental review of the specific exposures resulting from the proposed new uses. This rule would require a notice before the substance could be processed, thus ensuring that the Agency can evaluate the health and environmental risks of the substance.

The Agency does not intend to impose notice requirements on persons who process exempt substances for nonexempt commerical purposes either for research and development or for test marketing pursuant to TSCA section 5(h)(1) or (3). For example, if a person intended to process a byproduct which was not on the Inventory for commercial research and development or test marketing as a cleanser, he would not be required to submit a section 5 notice. Instead, a person in this situation would merely be required to follow EPA's proposed requirements for chemical substances undergoing research and development or test marketing (see proposed §§ 720.14 and 720.15; 44 FR 2242, 2267). Appropriate changes will be made in the proposed requirements to relieve persons of the responsibility for a section 5 notice when they process exempt substances for nonexempt commercial purposes either for R&D or for test marketing.

B. Effective Date

The processor notification rule is expected to be promulgated with the final section 5 rules in fall 1980. The exact date that it will become effective has yet to be determined, but EPA will give advance notice to the public as soon as the date is known.

Processor notification as outlined in this proposed rule will not be mandatory until the final rule is promulgated. However, because the Revised Inventory reporting period will close before processor notification is mandatory, there will be a short period during which persons who process exempt substances for a nonexempt commercial purpose cannot report these substances for the Revised Inventory and are not required to submit section 5 notices under a final processor notification rule. Processors who wish to process exempt substances for nonexempt purposes during this period should contact the manufacturers of these substances to allow the manufacturers to submit section 5 notices. Of course, a processor may submit a notice for the manufacturer if both sign the required certification statement. Any section 5 submitted prior to the promulgation of the section 5 rules are to be submitted in accordance with the guidelines outlined by the Agency on May 15, 1979 (44 FR 28564).

In any event, persons will be required to submit section 5 notices if they intend to process exempt substances for nonexempt commercial purposes after the promulgation of the section 5 rules. EPA will provide sufficient advance notice of the effective dates of mandatory processor notice submittal. Appropriate instructions will be issued to permit notice submittal in advance of the effective date of the requirements to accommodate persons who wish to commence processing shortly after the effective date of the notification requirement. This is necessary because under this scheme TSCA would prohibit persons from processing a substance within the 90-day period after the submittal of a section 5 notice. Accordingly, if a processor were not allowed to submit a notice until the effective date of the requirement, he would not be able to commercialize the substance for a TSCA commercial purpose between the effective date and at least 90 days after the effective date of the rule.

EPA requests comments on this effective date proposal.

C. Statutory Authority

This rule is proposed under sections 5(a)(1) and 5(a)(2) of TSCA. Section 5(a)(1)(A) requires submission of a notice at least 90 days before the manufacture or importation of a new chemical substance for nonexempt commercial purposes. Section 5(a)(1)(B) imposes a similar notice requirement prior to the manufacturing, importing, or processing of any chemical substance for a "significant new use." Section 5(a)(2) states that EPA may determine by rule that a use is a significant new use upon consideration of all relevant factors, including: (1) the projected volume of manufacturing and processing, (2) the extent to which a use

changes the type or form of exposure to humans or the environment, (3) the extent to which a use increases the magnitude and duration of exposure, and (4) the reasonably anticipated manner and methods of manufacturing, processing, distribution in commerce, and disposal under TSCA sections 5(a)(2)(A) through (D) of TSCA.

EPA believes that sections 5(a)(1)(A) and (B) and section 5(a)(2) authorize the reporting requirements for processors who also manufacture or import the chemical substances that they intend to process. EPA interprets these sections to require submittal of a notice if a person initially manufactures a substance for an exempt purpose, but later intends either to process the substance for a nonexempt purpose, or to distribute it to another person who he knows intends to process it for a nonexempt commercial purpose. The Agency has determined that nonexempt commercial processing of exempt substances is a significant new use of these substances (see discussion below). Therefore under the provisions of premanufacture reporting and significant new use rules, EPA is authorized to require notices from manufacturers or importers who either process exempt substances for nonexempt purposes or knowingly distribute exempt substances to other persons for nonexempt processing. EPA believes that Congress intended nonexempt commercial processing of exempt substances to be reviewed by the Agency under section 5. In §720.10(a)(3) and (b)(2) of the January proposal, EPA proposed that manufacturers and importers of R&D or test marketing substances must submit notices before undertaking distribution in commerce or use for nonexempt commercial purposes. None of the commenters offered negative comments on this provision.

EPA believes that sections 5(a)(1)(B) and 5(a)(2) authorize the reporting requirements for persons who did not manufacture or import the chemical substances they intend to process. EPA has evaluated the nonexempt commercial processing of exempt substances and has determined that, based upon an assessment of the factors set forth in section 5(a)(2), the transition of chemicals from exempt manufacture or import to nonexempt commercial processing is a "significant new use" under TSCA.

According to section 5(a)(2)(A), EPA must consider the projected volume of manufacturing and processing of a chemical substance before deciding that a use of that substance is a significant new use. When an exempt substance is to be processed for the first time for nonexempt purposes, the volume of manufacturing and processing of the chemical substance for uses subject to TSCA will by definition increase. In addition, the total volume of manufacturing and processing for nonexempt and exempt purposes will increase unless manufacture and processing for exempt purposes declines as processing for nonexempt purposes increases.

Sections 5(a)(2)(B) and (C) require EPA to consider the type, form, magnitude, and duration of exposure related to significant new uses. Processing for a nonexempt purpose also may significantly increase the type, form, magnitude, or duration of exposure to the substance. Many chemicals manufactured for exempt purposes are regulated under other statutes or are used in controlled situations in which exposures are restricted or closely monitored. For example, chemicals used in foods, food additives, drugs, cosmetics, or devices are subject to specific use restrictions and warning labels under the Federal Food, Drug, and Cosmetic Act. Pesticide products are registered and approved for particular uses and with appropriate restrictions under the Federal Insecticide, Fungicide, and Rodenticide Act. Further, some pesticide products are used by or under the control of persons who are required to be specially trained in their use and disposal.

Other exempt chemicals are manufactured only in small quantities solely for purposes of research and development. To be exempt, these chemicals must be used under the supervision of technically qualified individuals under EPA's proposed definition (40 CFR 720.2, 44 FR 2265). Moreover, under TSCA section 5(h)(3), persons engaged in experimentation, research, or analysis of the exempt R&D chemical substance must be notified of any risks to health that the manufacturer, processor, or EPA has reason to believe may be associated with the product. Finally, commercial processing of chemicals manufactured only prior to January 1, 1975 may increase the magnitude or duration of exposure of the chemical to humans or the environment. This exposure may increase because the chemical probably will not have been the subject of recent commercial activity.

The restrictions that are imposed upon many of the chemical substances manufactured and processed for exempt purposes do not apply when the chemicals are processed for nonexempt commercial purposes. Thus when these substances are processed for nonexempt purposes, often they are not subject to any restrictions upon the type, form, magnitude, or duration of exposure, and there may be no requirement that the products be labeled or used according to instructions designed to mitigate risks to health or the environment. In addition, persons who process, distribute, or use the substances (or products containing them) may have no reason to suspect that they should limit exposures to the substances.

Section 5(a)(2)(D) requires EPA to consider the reasonably anticipated manner and methods of manufacturing, processing, distribution in commerce, and disposal of chemical substances related to a significant new use. EPA believes that the reasonably anticipated manner and methods of processing, distribution in commerce, and disposal of substances may change when they are processed for nonexempt commercial purposes and placed in commerce. This is because processing may no longer be subject to established restrictions under other laws; the substances may be distributed to a significantly larger number and variety of persons; and disposal of the particular substance or products containing them may be unregulated.

For all these reasons, EPA has determined that the change from a TSCA-exempt use to a TSCA use constitutes a "significant new use." In passing section 5, Congress intended for EPA to review new chemical substances before they result in exposure to humans and the environment. Consistent with this intent, the notification requirements should apply to chemical substances originally manufactured for exempt purposes before they are processed for nonexempt commercial purposes.

D. Processor Reporting

In the January 10, 1979 proposed section 5 rules, EPA recognized that a substance initially manufactured or imported for a purpose exempt from TSCA could be distributed in commerce or used by the original manufacturer or importer for a purpose which fell within the scope of TSCA and the section 5 notification program. The Agency believed that such an activity should be preceded by the filing of a section 5 notice and that the original manufacturer of the substance was the appropriate person to file such a notice. In January 1979 EPA proposed that manufacturers or importers be required to submit notices before they either distributed in commerce or used an R&D or test marketing substance in a manner inconsistent with the exemption. (Proposed 40 CFR 720.10(a)(3) and (b)(2)

(44 FR 2242, 2266) and Support Document: Premanufacture Notification Requirements and Review Procedures, pp. 15–19 (January 1979)). The preamble noted that EPA was exploring various reporting requirements for those exempt substances processed for the first time for nonexempt commercial purposes after the expiration of the Revised Inventory reporting period. One alternative mentioned was the development of significant new use rules under section 5(a)(2) to require reporting by manufacturers, importers, and processors (44 FR 2246). The rule proposed in this notice would replace proposed § 720.10(a)(3) and (b)(2).

Section 720.11 of the January proposal would have provided that persons who only processed such substances would not be subject to the notification requirement; further, as was noted in § 720.11, the filing of a notice by a person other than the manufacturer or importer would have been invalid (44 FR 2242, 2266). The proposed rule would change this approach to allow processor reporting as outlined in this proposal.

EPA proposed in January that, if the manufacturer or importer requested, the processor could prepare and submit the form to EPA as the agent of the manufacturer or importer under proposed § 720.11 (44 FR 2242, 2266). However, EPA also recognized that in some cases the manufacturer or importer would not know whether a customer intended to process his product for a TSCA use and that the processor would not want others to be aware of his commercial processing under TSCA. The proposal did not suggest any mechanism for the processor to file a notice independent of the manufacturer or importer. It did state that EPA was exploring the use of section 5(a)(2) to provide for processor reporting and that it was attempting to define the responsibilities of a processor who did not also manufacture or import the substance (44 FR 2242, 2246).

Comments on the January proposal from a number of industry and environmental groups took strong exception to EPA's proposal not to allow processors to submit section 5 notices. Commenters argued that there was no basis in the statutory framework for denying processors the right to file a notice on their own behalf. All commenters on this subject urged processor section 5 notification, and a majority pointed out a particular need for such notification when an exempt substance was processed for a nonexempt commercial purpose.

EPA's proposal to rely primarily upon manufacturers and importers to report new substances was based on its belief that the manufacturer or importer in many cases would have more complete knowledge of the necessary information, including the health and environmental effects of the substance and the range of possible uses. As a general rule, the processor would have better knowledge of his own processing techniques and perhaps his end uses of the substance, but he might have significantly less complete knowledge of its health and environmental effects and possibly its specific chemical identity.

EPA still believes that manufacturer or importer reporting is preferable to processor reporting. As planned, the proposed rules will continue to require the submittal of a notice by the manufacturer or importer prior to manufacture or import of a new chemical substance. Filing of a section 5 notice by processors is proposed only where the manufacturer or importer of an exempt substance, at the time of distribution of a particular quantity of the chemical, did not know that the chemical was to be processed for a nonexempt commercial purpose. The Agency is proposing this reporting because it now believes that it has adequate mechanisms to fill any data gaps in processor notices. First, EPA can use a variety of means to obtain additional information on the substance from the manufacturer or importer who will be identified on the notice. EPA invites comments on impacts on confidentiality if EPA contacts manufacturers or importers. Second, when EPA has specific concerns about certain uses of the substance, or lacks sufficient information, it can require further reporting on the substance under sections 8(a) or 8(d) or section 5(a)(2) to obtain information on other uses and exposures as they occur.

E. Alternatives to Processor Notices

EPA has considered several alternatives to the section 5 processor requirement described in this proposal. These alternatives were considered primarily for the reduced reporting burden they impose on industry.

First, EPA could require processor reports under section 8(a) rather than under sections 5(a)(1) and 5(a)(2). Such a rule would require submission of a notice on commencement of nonexempt commercial processing. Section 8 notices could require significantly less information. Section 8 notices might require only company name, contact person, chemical identity, amount processed, an estimate of consumer and worker exposure, a description of the categories of use, any health and safety data, and the name of the supplier of the substance. EPA would not add the substance to the Inventory when processing began but might impose a significant new use rule that would require notices from those who would process the substance at a greater volume or for purposes other than the use proposed in the processor notice. The alternative of section 8(a) notices would also reduce the number of persons affected by such a rule as a section 8(a) requirement may not be applied to a "small processor." This alternative is therefore less costly to industry than the alternative proposed.

However, if a notice were submitted under section 8(a), EPA could not take action under sections 5(e) and 5(f) during the review period. It is more difficult to take actions under TSCA sections 6 and 7 than under sections 5(e) or 5(f). A section 8(a) requirement could therefore reduce the number of persons subject to the rule, limit information requirements, provide little advance notice, and restrict EPA's ability to act on the chemical. Chemicals reported under such a rule would not be added to the TSCA Inventory until a section 5 notice was submitted by a manufacturer or importer of the substance.

Second, the Agency could require section 5 notification for substances of special concern and section 8(a) notification (as outlined under alternative 1) for the remainder of exempt substances which are processed for a nonexempt commerical purpose. This approach would employ the alternative of section 8 notification for the nonexempt commercial processing of the majority of exempt substances. EPA would also require section 5(a)(2) notification for the nonexempt commercial processing of certain exempt chemicals based on particular concerns over the toxicity or exposures caused by nonexempt commercial processing. The significant new use rule would designate chemicals by categories based on toxicity or exposure and would establish which processors would report and when they would report. Information requirements for chemicals subject to the significant new use rule would be very similar to the data requirements proposed in October 1979 for section 5 notices.

This alternative would place very significant burdens on EPA resources. To attempt a rulemaking on each category of chemicals would be very time consuming, to say nothing of the task of selecting which chemicals and categories would be subject to significant new use notification. The Agency believes that resource constraints make this alternative impracticable. Moreover, chemicals in

the designated categories might never be used for TSCA purposes, and this would render the exercise useless. Again, because EPA would receive little information on the majority of chemicals reported, risk assessment would necessarily be limited.

Third, the Agency has considered the option of not requiring reporting prior to processing of an exempt substance for a nonexempt commercial purpose. No processor notices would be submitted under this alternative. However, EPA would attempt to prohibit the processing of exempt substances for a nonexempt commercial purpose. Under this approach, EPA would rely on the terms of section 5(a)(1)(A) and the prohibitions of section 15(2) to restrict the nonexempt processing of substances that were exempt from notice requirements at the time of manufacture or import.

EPA does not favor this approach for several reasons. As stated above, EPA believes that Congress did not intend exempt substances not on the Inventory to be processed for nonexempt commercial purposes prior to EPA review. Allowing such a gap to exist would be contrary to the stated purposes of the Act.

Enforcement of TSCA in this area would be very complex without a processor reporting rule. Section 15(1) states that it is unlawful to fail or refuse to comply with any requirement prescribed by section 5 or any rule promulgated thereunder. Without a processor notification rule promulgated under section 5, persons who process exempt substances for nonexempt commercial purposes would be under no compulsion to notify the agency of their processing and could not be penalized for doing so without EPA notification.

Section 15(2) makes it unlawful for a person to use for a commercial purpose a chemical substance that he knew or had reason to know was manufactured or processed in violation of section 5. The nonexempt commercial processing of an exempt substance without EPA notification does not violate section 5 if there is no separate processor rule. In addition, because the chemical may be processed and sold several times before it reaches the user, it may be very difficult to ascertain whether the user was aware of any earlier TSCA violation. Therefore, this alternative is fraught with enforcement difficulties.

Even if nonexempt commercial processing of chemicals manufactured for exempt purposes were not subject to EPA notification under TSCA, it would be in the best interests of manufacturers, importers, and processors to submit section 5 notices for the commercial processing of exempt substances. Where the manufacturer or importer processes an exempt substance for a nonexempt commercial purpose and later decides to manufacture or import the substance for a nonexempt commercial purpose, he would have to submit a notice before manufacture or import. By submitting a notice before nonexempt commercial processing, the manufacturer or importer could proceed to manufacture or import the substance for nonexempt purposes after it clears section 5 review without the potential delay of a later notice submittal. If the processor is not the manufacturer or importer and the manufacturer becomes aware of the intended nonexempt commercial processing, the manufacturer would be required to halt distribution for the nonexempt purpose and submit a notice. Finally, by filing a section 5 notice for the chemical at the time of initial processing, the processor will be able to avoid future interruptions in supply and possible shutdown at a later stage in the commercialization of the chemical if the manufacturer learns of the processing and fails to submit a notice.

The EPA encourages comment on these and other alternatives.

F. One-time Processing of R&D and Test Marketing Substances for Nonexempt Commercial Purposes

As proposed, the rule would require a section 5 processing notice for all exempt substances that are processed for a nonexempt commercial purpose, including those initially manufactured or imported solely in small quantities for research and development or for test marketing. EPA is considering whether to exclude from processor notification those substances manufactured or imported for R&D or test marketing that a person intends to process and use up on a one-time or limited basis solely as an alternative to disposal.

In various contacts with EPA, manufacturers and processors have inquired how the Agency might treat the following situation: A substance is manufactured in small quantities for R&D, or under a test marketing exemption. At a later time a person in possession of a quantity of the substance (either the original manufacturer or another to whom it was distributed) determines that the substance does not have characteristics that justify further manufacture, import, processing, or distribution in commerce. In some cases, the substance may be useless for any commercial purpose and would be disposed of. In other cases, however, the substance may have a nonexempt commercial use which allows the person to recover all or part of the costs for the substance. It is this one-time processing with which EPA is concerned.

EPA believes that substances manufactured solely in small quantities for R&D or for test marketing may belong in a separate category from other exempt substances. Other exempt substances will almost always have their former exempt use as an alternative to disposal and will not be subject to the economic pressures forcing one-time processing. For example, a substance manufactured as a pesticide, food, or drug may fail in a nonexempt commercial use, but will still have its primary use as a pesticide, food, or drug as an alternative. Byproducts, on the other hand, because they are already produced without a commercial intent per se during the manufacture of another substance, will not be under the same economic pressures which make one-time processing desirable. For these substances, it is unlikely that there will be any one-time processing for a nonexempt commercial purpose. However, a substance manufactured or imported for R&D or for test marketing may have a nonexempt commercial use as the sole alternative to disposal, and processing on a one-time or limited basis to "use up" the substance is much more likely to occur.

The question EPA must answer is whether this "using up" of a substance for which the manufacturer, importer, or processor does not intend a long-range, commercial future should be subject to any notification, or notification under TSCA section 5, or the more limited reporting requirements of section 8(a). EPA recognizes that if section 5 notification costs are too high, the potential processor may choose disposal. This would serve neither EPA's nor industry's purposes.

Several arguments can be made for allowing processing for this use without EPA notification. First, use of the substance may be more beneficial to the environment than disposal. Second, if notification costs are greater than the benefits of one-time processing, the processor may suffer an increase in overall costs. Third, it may not be desirable to add a substance to the Inventory if it will immediately lose its commercial status. Rather, if other TSCA uses are later discovered by the current manufacturer or others, it may be more appropriate for EPA to review the substance at that time, when more information is available.

However, there is a strong argument for mandatory EPA notification. The "using up" of the substance may involve significant exposure to humans and the environment. EPA is therefore

considering limited section 8 reporting only for those substances that (1) were manufactured or imported for R&D or test marketing and (2) are processed for a nonexempt commercial purpose in quantities over 500 pounds solely as an alternative to disposal because the substances have no long range commercial future. Commercial processing of these substances in amounts of less than 500 pounds would have no notification requirements. Substances might be said to have no long range commercial future when it would not be economically practicable at the time of processing to purchase or manufacture the substance again for any use.

Reporting under this scheme would be pursuant to section 8, rather than section 5, and would require only minimal data. For these substances, EPA is considering requiring company name, contact person, chemical identity, amount processed, estimated number of consumers or workers exposed, a description of the categories of use, and name of the supplier of the substance. Persons processing substances for R&D pursuant to proposed § 720.14 (44 FR 2242, 2267) and who have received information on health risks from the manufacturer or importer under proposed § 720.14 would submit such data with the notice. The notice would be submitted 90 days before processing could begin. Because these substances are processed on a one-time basis, EPA believes it would be inappropriate to add these substances to the Inventory.

Comments are invited on all aspects of this possible requirement. The Agency requests information on the factual situations in which this notification requirement would apply. Comments should identify as many examples as possible from the commenter's commercial experience. The Agency particularly requests comments on the appropriateness of 500 pounds as the cutoff. Commenters should address the necessity of a 500-pound limit as opposed to a larger or smaller cutoff and provide support for any alternatives suggested.

Comments are also solicited on the content and phrasing of the requirement that these substances have "no long range commercial future." They should focus on the number of R&D and test marketing substances that fit this category. Comments should state in detail the criteria used by industry to determine that a substance has no long range commercial future which would justify further manufacture or purchase. Each commenter should include specific examples from company history.

G. Integration of Processor Reporting with the Resource Conservation and Recovery Act

There may be some processors of byproducts (a chemical substance produced with no commercial purpose) for a nonexempt commercial purpose who also will be subject to regulation under Subtitle C ("Hazardous Waste Management") of the Resource Conservation and Recovery Act of 1976 (RCRA) (42 U.S.C. sec. 6901 et seq.). For the processing of a substance to be covered both by this proposed processor notification rule and by Subtitle C, a number of conditions would have to be met. First, the substance would have to be produced originally without a commercial purpose and could not be on the TSCA Inventory. It also would have to be intended for processing for a commercial purpose (as defined under TSCA) and this processing would have to involve "treatment" (as defined by section 1004(34) of RCRA). Finally, the substance would have to be a "hazardous waste" as defined in 40 CFR 261.3.

In the final RCRA regulations published on May 19, 1980 (45 FR 33065), EPA has chosen not to apply RCRA requirements to the actual use, reuse, recycling or recovery of hazardous wastes. RCRA requirements do apply to the transportation and storage of sludges as defined in 40 CFR 260.10(a)(63), and wastes listed in 40 CFR §§ 260.31 and 260.32 which are destined for use, re-use, recycling or recovery. See 40 CFR 261.6. If this policy is retained, there would be no dual coverage of these activities under RCRA and TSCA. However, the Agency may later decide to apply RCRA requirements to these activities (45 FR 33094). If the Agency finds that it would be undesirable to require persons conducting these activities to report under TSCA, it may wish to exempt them from reporting. The following discussion addresses the issues that may be raised by dual coverage if the Agency extends RCRA to cover these processors of byproducts.

There are two scenarios in which a facility treating a byproduct which is a hazardous waste under RCRA may fall under TSCA. First, if such a facility treats a byproduct containing a new chemical substance and the facility extracts the new chemical substance for sale in commerce, it would be processing the exempt substance (the byproduct) for a nonexempt commercial purpose. However, in this case the facility also would be the manufacturer of the new chemical substance and thus would be required to submit a notice under TSCA section 5(a)(1)(A) (even if there is no processor notification rule). Second, if the facility treats a byproduct containing a new chemical substance and processes the byproduct to produce another chemical (not a new substance) for distribution in commerce, it would be required to notify EPA under this proposed rule as a processor. Although EPA believes that the number of substances in this category probably is quite small, the Agency is not sure whether it should require this second category of processors to submit notices under this rule.

TSCA coverage of these RCRA facilities may be troublesome. Requiring section 5 notices 90 days prior to commencement of processing may be a disincentive to the recycling of byproducts. It also may be difficult to identify the chemical constituents of byproducts or to determine whether new chemical substances are present. However, this problem may be present with regard to all byproducts. Facilities which recycle or recover byproducts which are hazardous wastes may in the future be subject to facility and permit requirements under section 3004 and 3005 of RCRA. See 40 CFR 261.6 and 45 FR 33094. The types of requirements which facilities may have to meet are set forth in 40 CFR Parts 122, 124, 264 and 265.

On the other hand, TSCA gives EPA a broad spectrum of powers and responsibilities. The Agency has significant responsibility to protect both humans and the environment from "unreasonable risks" and to protect both workers and members of the general public who are exposed to chemical substances. In particular, section 5 notification permits EPA to review new chemical substances in a way that is not authorized by RCRA. Also, application of TSCA in these situations appears to be consistent with EPA's duties under both section 9 of TSCA and section 1006 of RCRA, which require the Agency to avoid duplication and to coordinate its implementation of the various statutes that it administers. The notice required by TSCA will not require resubmission of any information already submitted to the Agency under RCRA or any other Act it administers.

As proposed, this processor notification rule would require reporting by facilities treating hazardous wastes when the wastes they treat are byproducts and are processed for a nonexempt commercial purpose. The Agency solicits comments on the implications of requiring these treaters of hazardous wastes under RCRA to submit section 5 notices under TSCA.

III. Processor Notification Procedures

A. Determination of Reporting Responsibilities

1. *Chemical identity known.* If a person wishes to process for a nonexempt commercial purpose a substance manufactured for an exempt purpose, he may do so without submitting a section 5 notice if the substance appears on the TSCA Inventory. A person may ascertain whether a chemical is on the Inventory by examining the Inventory and, through a "bona fide" search, ask EPA whether a generic name covering the chemical appears in the confidential section of the Inventory under proposed § 720.12(b) (44 FR 2242, 2266). If the chemical is not on the Inventory, a notice would be required before nonexempt commercial processing of an exempt substance could occur.

If the manufacturer or importer of an exempt substance wishes to process the substance for a nonexempt purpose, he would be required to submit the notice. If the manufacturer or importer of an exempt substance provides the substance to another person who he knows at the time of distribution will commercially process the substance for a nonexempt purpose, the manufacturer or importer would be required to submit a notice.

The processor who did not manufacture or import the substance would be required to submit the section 5 notice himself unless the manufacturer or importer submits it or the processor submits a notice jointly with the manufacturer or importer. EPA believes the second alternative of manufacturer submission would ensure a more complete notice because the manufacturer has greater experience with the chemical. Of course, a notice with little or no data might make supplemental reporting and followup more probable. In a joint submission, manufacturers and processors could send their sections directly to EPA to preserve confidentiality. The Agency invites comments on the validity of EPA's assumption that manufacturers' or importers' knowledge about these chemicals is greater than processors'.

A somewhat special case arises for those processors who do not find the chemical they wish to process on the Inventory and are unable to determine that the chemical was manufactured or imported for an exempt purpose. The Agency proposes that these persons report and provide an explanation of any basis for a belief that the substance was manufactured or imported for an exempt purpose. Comment is invited on this potential requirement. Processors would not be allowed to knowingly report substances which did not appear on the Inventory because the manufacturer or importer failed to report the substances in violation of TSCA sections 5 or 8.

In any event, the processor could not begin nonexempt commercial processing unless and until the substance had completed section 5 review. If nonexempt commercial processing took place prior to completion of the review process, this would constitute a violation of TSCA section 15, subjecting the violator to the penalties detailed in section 16.

2. *Chemical identity unknown.* EPA assumes that cases will arise in which the processor does not know the specific chemical identity of the substance he intends to process but knows that it is an exempt substance not on the inventory. In these cases, EPA proposes that the processor obtain the specific chemical identity from the manufacturer or supplier and submit it to EPA in the processor notice. The Agency requests comments on the extent to which such contacts by themselves may reveal confidential information to the manufacturer or supplier. When the manufacturer or supplier does not wish to reveal the specific chemical identity to the processor, EPA proposes that the manufacturer report the specific chemical identity directly to the Agency in conjunction with the processor's notice. EPA solicits comments on the desirability of joint reporting for specific chemical identity or for any other notice information and how condifentiality could be handled. If the manufacturer or importer refuses to cooperate, the Agency would require reporting of the identity through its supplemental reporting authority under proposed § 720.50(b) (44 FR 2242, 2277).

If the potential processor is unaware of both the chemical identity and whether the chemical appears on the Inventory, the processor would obtain the chemical identity from the manufacturer or importer as outlined above. If the manufacturer or importer refused to assist the processor, EPA would use section 8 to require reporting of the chemcial identity and would inform the processor whether a processor notice was required. Of course, submitting a joint notice is one alternative that will always be available.

If these persons are also unable to determine whether the substance was originally manufactured or imported for an exempt purpose, EPA is considering having such persons report any basis for a belief that the chemical was manufactured or imported for an exempt purpose when they request EPA assistance in reporting chemical identity. The Agency is also considering how it might aid processors by requiring the manufacturer or importer to inform processors that the chemcial they are providing was manufactured or imported for an exempt purpose. EPA solicits comments addressing the authority for a requirement of this type, how it might be implemented, and how it might be framed so as not to reveal confidential data.

The Agency requests estimates of the number of cases in which processors do not know the chemical identity of the substance they are processing. Any estimate should identify the data on which it is based.

B. Information Required To Be Submitted

EPA is proposing that processor notices contain the information proposed for section 5 notices on January 10, 1979 as modified by the proposal of October 16, 1979.

In addition to these requirements, the processor would be required to submit the following information:

(1) The name of the supplier of the substance (i.e., the person who manufactured, imported, or sold the substance, if different from the submitter).

(2) The names of future suppliers of the substance (e.g., the original supplier, other manufacturers or importers, or future manufacturers of importers of the substance).

(3) Where the submitter was not the manufacturer but intends to manufacture the substance, descriptions of the intended manufacturing process, to the extent it is known or reasonably ascertainable.

(4) The amount of the chemical to be processed.

(5) If the chemical substance was manufactured for R&D under proposed § 720.14, any information on health or environmental risks which the submitter received under § 720.14(a)(2) or evaluated under § 720.14(c).

These additional requirements would give EPA information comparable to what it would have under a manufacturer's notice submission. The requirements are authorized by TSCA sections 5(d) and 8(a)(2) and are necesary to estimate the total amount to be processed and the number of individuals who are or will be exposed. Such information will also enable EPA to gather other relevant information when necessary. The Agency does not believe these additional requirements are burdensome or costly.

It should be noted that where data have already been sumbitted on the substance to EPA or any other government agency, the submitter may merely reference these data rather than resubmit them under proposed § 720.23(c)(2) (44 FR 2242, 2272). The Agency believes this may be particularly helpful for submissions on chemicals previously manufactured as pesticides, foods, food additives, drugs, cosmetics, devices, or specified nuclear materials.

The Agency believes that a processor notice form may be necessary to simplify reporting by persons subject to this rule. This form would be based on the proposed manufacturer's notice form published in the Federal Register of October 16, 1979 (44 FR 59764, 59788), and modified to reflect the information requirements proposed above. The certification statement would also be recorded to apply to processors. Comments are requested on the necessity for a separate form and on the portions of the form that will need to be changed for processors.

When the final section 5 reporting rule is promulgated, EPA will clarity any minor differences between requirements for processors and for other persons who submit section 5 notices. Persons are invited to submit comments on the portions of the section 5 rules as proposed in January and October which should be modified to cover processors' notices.

C. EPA Review of Processor Notices

EPA intends to review a processor notice submitted under this proposed rule in the same manner as a notice submitted under section 5(a)(1)(A) within the 90-day period provided by TSCA. EPA would begin by reviewing the information submitted in the notice. In some cases, the Agency would request the supplemental reporting of information from the manufacturer under proposed § 720.50 (44 FR 59764, 59784).

This information may be important for the following reasons. First, the manufacturer may have additional health and safety studies on the substance. Second, the manufacturer may possess additional information on other commercial uses subject to TSCA. Third, EPA may need information on the method of manufacture and on exposures that might occur during manufacture. Persons are referred to EPA's proposed rules on supplemental reporting under proposed 40 CFR 720.50 and 720.51 (44 FR 59764, 59785–87). Comments are invited on any changes that should be made to these sections to cover supplmental reporting by these manufacturers.

EPA will review the substance according to section 5, may extend the notice period under section 5(c), and may regulate the substance during the notice period under sections 5(e) or 5(f). EPA may also take followup action for the substance through a reporting requirement under sections 5(a)(2) or 8.

Under section 5(g) of TSCA, if EPA does not take action under TSCA sections 5, 6, or 7 on a notice submitted under section 5(a)(1)(B), the Agency must publish a Federal Register notice before the expiration of the review period stating the reasons why it did not take action. EPA is proposing this processor reporting rule under the joint authority of sections 5(a)(1)(A), 5(a)(1)(B), and 5(a)(2). Because processor notices will be very similar to notices submitted under section 5(a)(1) prior to initial manufacture or import, EPA is considering whether a 5(g) notice should be issued and, if so, what it should contain. The Agency invites comments on how section 5(g) should apply to these processor notices.

After the review period expires, the submitter may commence processing unless EPA has taken affirmative action to prohibit it. Under this proposal the processor would submit a notice to EPA when he began to process, analogous to the notice of commencement of manufacture; EPA would then add the substance to the Inventory. EPA may impose followup reporting requirements so as to be informed of changes in use and exposure that might be of concern to the Agency. EPA also is considering followup requdirements under a significant new use rule or section 8 authority that would require the processor-submitter or other persons to report changes from the uses and exposures reported in the processor notice. The Agency requests comments regarding the need for such followup and how it might be implemented.

IV. Enforcement Policy

EPA's basic policy concerning enforcement of the Inventory reporting and section 5 notification requirements was originally stated in 40 CFR 710.3 of the Inventory rules (42 64572, 64577), and discussed further in EPA's proposed section 5 rules (44 FR 2242) and the May 15, 1979 notice concerning publication of the Initial Inventory (44 FR 28558). This policy addresses when and against whom the Agency will take enforcement action under sections 15(1) and 15(2) of TSCA. TSCA section 15(1) makes it unlawful for a person to fail or refuse to comply with the notification requirements of section 5, while section 15(2) makes it unlawful for a person to use for a commercial purpose any substance that he knew or had reason to know was manufactured, processed, or distributed in commerce in violation of section 5.

Promulgation of the processor notification rule will not affect the previously stated enforcement policy as it relates to manufacturers and importers of chemical substances. That policy remains as follows:

(1) The notification requirements of TSCA section 5(a)(1)(A) for manufacturers and importers in bulk of new chemical substances began on July 1, 1979, 30 days after publication of the Initial Inventory. These requirements apply to all chemical substances not on the Initial Inventory.

(2) The notification requirements of TSCA section 5(a)(1)(A) will not be applied to importers of chemical substances as part of a mixture until 30 days after publication of the Revised Inventory.

After these deadlines, manufacturers and importers of substances not in compliance with section 5 will be held in violation of TSCA section 15(1) and subject to appropriate enforcement action under TSCA sections 16 and 17.

EPA intends to permit continued importation of substances as part of an article without Agency review. Prior to the publication of the Revised Inventory, EPA also does not intend to apply section 15(2) to processors or users.

The processor notification rule does, however, affect the Agency's enforcement policy as it relates to processors and users of chemical substances beginning 30 days after publication of the Revised Inventory. After this date, section 15(2) will be applied to any person who processes a *nonexempt* chemical substance for a *nonexempt* commercial purpose.

After the effective date of the final processor notification rule, EPA will also apply sections 15(1) and 15(2) to processors of *exempt* substances for *nonexempt* commerical purposes. To be processed in compliance with TSCA after the effective date, such a substance must have undergone section 5 review. EPA will give sufficient advance notice of the effective date to ensure that industry is aware of its TSCA responsibilities.

The final processor rules will be promulgated after the Revised Inventory reporting period has ended. There is therefore an interim period during which persons who process exempt substances for a nonexempt commercial purpose cannot report these substances for the Revised Inventory and are not required to submit section 5 notices under a final

processor notification rule. Processors of these substances should contact the manufacturers of the exempt substances, so that the manufacturers can submit section 5 notices according to the guidelines issued by the Agency published in the Federal Register of May 15, 1979 (44 FR 28564). By having manufacturers submit section 5 notices before the effective date of the processor reporting rule, processors face minimal interruption of commercial activity. Upon promulgation of the final rule, EPA will strictly enforce the prohibition against processing until review of the section 5 notices has been completed.

As noted above, persons who only use chemical substances for a commercial purpose and do not process or manufacture them are not themselves subject to the section 5 premanufacture notification requirement. However, 30 days after publication of the Revised Inventory, and prior to promulgation of the final processor notification rule, EPA will apply TSCA section 15(2) to users of chemical substances *manufactured* for a *nonexempt* commercial purpose. (If this nonexempt substance were processed before use, the Agency would still apply section 15(2) to the users.) After promulgation of the final processor notification rule, EPA also will apply TSCA section 15(2) to users of chemcial substances that were initially manufactured for an *exempt* purpose and then later processed for a *nonexempt* purpose.

V. Economic Impact Analysis

A. Persons Who Must Submit Notices

Any person who intends to process for a nonexempt commercial purpose a new chemical substance that was originally manufactured or imported for an exempt commercial purpose will be required to ensure that a section 5 notice has been submitted at least 90 days before he intends to begin processing. The term "exempt substance" has been defined previously in this notice to include chemicals manufactured or imported as pesticides, foods, food additives, drugs, cosmetics, devices, byproducts, chemicals manufactured or imported before January 1, 1975, or chemicals manufactured for R&D or test marketing. If the substance is processed other than for these purposes, a notice must be submitted, and it is proposed that the processor ensure that a section 5 notice is submitted.

The requirement that a section 5 notice be submitted does not necessarily mean that processors will always submit the notice. As outlined above, the processor also could have the manufacturer or importer submit the notice or submit a joint notice with the manufacturer or importer. Thus, the requirement of notification will not always fall on processors, but may be split or fall solely on the manufacturer or importer. Further, the requirement of submitting this section 5 notice only falls once and subsequent processors, manufacturers, or importers will not be required to submit such a notice again for the same chemical.

Arthur D. Little, Inc. has estimated that over 50 percent of the chemical firms in the U.S. only process or formulate chemicals and do not manufacture chemicals. (*Impact of TSCA Proposed Premanufacturing Notification Requirements*, December 1978 (p. II-2).) However, EPA does not assume that firms that only process will bear the burden of complying with the proposed section 5 requirements. First, some manufacturers or importers will process their own exempt chemicals for a nonexempt commercial purpose. Second, only select groups of processors may be affected by the requirement to any significant degree. It may be expected, for example, that R&D and pesticide substances will be processed more frequently for nonexempt commercial purposes than other types of exempt substances.

The Agency solicits comment on how it might be able to better identify the persons who will be subject to reporting under this proposed rule.

B. Number of Chemical Substances Subject to Notification

The number of chemical substances that will be subject to notification each year under this proposed rule is difficult to estimate. To determine this number, one would have to know the number of chemicals manufactured for the exempt purposes enumerated under the rule, and how many of these chemicals are processed for a nonexempt commercial purpose each year before they are manufactured or imported for a nonexempt commercial purpose. It is reasonable to assume that the number of exempt substances processed for a nonexempt commercial purpose is less than the total number of exempt substances.

One indication of the number of substances that might be subject to notification under this rule is provided by comparing lists of exempt chemicals with substances reported for the TSCA Inventory. A comparison of a list of 1,452 active pesticide ingredients with the TSCA Inventory revealed that 688 or 47.4 percent of the ingredients are listed on the Inventory. A similar comparison of a list of 734 inert pesticide ingredients disclosed that 617 or 82.7 percent of the substances appear on the Inventory.

R&D and test marketing substances are also expected to be subject to notification under the proposed rule with some degree of frequency. When a chemical is to be commercially marketed, quantities manufactured or imported for R&D may well be processed for a nonexempt commercial purpose before the chemical is imported or manufactured for a nonexempt commercial purpose. It is also estimated that 1,000 to 2,000 new R&D chemicals are manufactured each year, although the number that are commercially marketed for nonexempt purposes is apparently smaller.

Substances manufactured for foods, food additives, drugs, or cosmetics are not likely to be processed frequently for TSCA purposes, due to their specialized application and chemical formulas. The same is likely to be true for chemicals manufactured as source materials, special nuclear materials, or byproduct materials as defined by the Atomic Energy Act of 1954. There are no lists of chemical substances used for FFDCA or nuclear purposes that are both readily computer searchable and compatible with the TSCA Inventory. There are no lists of chemical substances manufactured solely as byproducts or manufactured or imported only prior to January 1, 1975. It is difficult to predict how often these exempt substances might be processed for a nonexempt commercial purpose.

Overall this processor requirement will probably reduce the number of notices submitted by manufacturers and importers. A number of substances manufactured or imported for exempt purposes will eventually be manufactured or imported for nonexempt commercial purposes and thereby subject to section 5 notification. If these substances are processed for nonexempt commercial purposes and reported to EPA, they will appear on the Inventory and no notification would be required when they are subsequently manufactured for nonexempt commercial purposes.

C. Costs of Proposed Option

As part of the effort to evaluate the economic effects of the Agency's general section 5 notice requirements, EPA had a contractor, Arthur D. Little, Inc. (ADL) prepare unit costs for completing and submitting the section 5 form proposed on October 16, 1979 (EPA Contract No. 68-01-4717). The rule being proposed here will require processors to use a similar form; therefore, the unit costs of preparing and submitting the processor form should be very similar.

The estimated costs include the costs of preparing the section 5 form and the attachments (except for voluntary attachments), but do not include the costs of responding to supplemental reporting requirements that may be incurred for some section 5 submissions. The report of the contractor's findings, entitled "Estimated Costs of Preparation and Submission of Reproposed Premanufacture Notice Form" (EPA 560/12-79-005) is a part of the record for this present rulemaking and is available from EPA's Industry Assistance Office.

1. *Cost estimation methodolgy.* For developing the unit cost estimates, the contractor did the following:

(1) Identified specific information elements required by the forms.

(2) Designed worksheets based on these information elements to obtain estimates of time requirements.

(3) Completed these worksheets using contractor personnel with experience in chemical engineering, chemistry, data analysis, and toxicology.

(4) Assimilated the information from worksheets; developed estimated ranges of time required to complete the forms.

(5) Multiplied these time estimates by estimated labor rates to obtain total direct labor costs.

(6) Interviewed selected chemical companies to obtain their time and cost estimates for completing the forms.

(7) Compared the chemical companies' estimates for time and cost with the contractor's estimates.

2. *Estimated costs.* The estimated cost range for the form, not including the costs of asserting and substantiating claims of confidentiality, is $1,155 to $8,925 per chemical substance. EPA believes this cost range will apply to most substances submitted for section 5 review whether submitted by a chemical manufacturer or processor; however, it is conceivable that certain chemicals, for example very low or high volume substances, will fall below or above the range. Thus, the cost range should not be regarded as reflecting the absolute cost limits for a section 5 submission.

The major cost elements in making a section 5 submission appear to be the requirements to retrieve, organize, and submit health and safety data and the requirement to submit a block diagram. The cost of submitting this information is discussed in more detail later in this section.

The costs of asserting and substantiating claims of confidentiality, if claims are made, are estimated to range from $900 to $6,400. EPA does not regard the $900 figure as an absolute lower limit and expects that many companies will be able to comply with the requirements for much less. Thus, including confidentiality costs, the total cost of a section 5 submission is estimated from $2,000 to $15,300.

The cost of asserting and substantiating claims of confidentiality is presented separated from the costs of completing and submitting the section 5 form because to a certain extent, they are not affected by the form per se. Rather, confidentiality costs are determined largely by provisions in TSCA itself, the Freedom of Information Act (FOIA), and EPA's general rules regarding the treatment of confidential information under 40 CFR Part 2.

3. *Breakdown of section 5 form costs.* The following Table I is a detailed breakdown of the costs estimated by ADL.

Table I.—*Total Cost Estimates for Completion of Section 5 Form*

Component	Cost
Part I: General Information	$275-$2,100
Part II: Human exposure and environmental release:	
Sec. A: Industrial sites controlled submitter	275-2,100
Sec. B: Industrial sites controlled by others	0-1,200
Sec. C: Consumer exposure	0-800
Part II Total	275-4,100
Part III: List of Attachments:	
Sec. A: Physical/chemical properties	150-600
Sec. B: Health and environmental effects data	300-1,400
Part III Total	450-2,000
Part IV: FEDERAL REGISTER Notice	75-300
Clerical Costs—All Sections	80-400
Total	1,155-8,925

4. *Variables influencing costs of section 5 submissions.* The cost ranges for completing and submitting the section 5 form are wide, reflecting the extreme variations in the types of companies and chemicals which may be subjected to these requirements. In developing these unit cost estimates the contractor assumed that the range is a function of the following variables:

Company-Related Variables

i. Company size.

ii. Degree of diversification.

iii. Organizational style.

iv. Level of technical resources.

v. Importance of confidentiality to company's new product development strategy.

Chemical Substance-Related Variables

i. Apparent toxicity.

ii. Anticipated distribution, use, exposure.

iii. Complexity of production process.

iv. Complexity of composition of chemical substances.

v. Importance of confidentiality for the substances in question.

The Agency invites comments on the cost estimates presented in this report, as well as on the methodology and assumptions used.

D. Costs of Alternatives

In developing this proposed rule, EPA considered three other alternatives. As stated above, these are: (1) section 8(a) reporting with a reduced reporting requirement; (2) section 8(a) reporting for most substances and section 5 notification for special categories of substances; and (3) no processor reporting.

Using the methodological foundation developed by ADL in its preliminary study of the economic impacts of proposed PMN regulations and notice requirements, EPA's contractor for the in-depth study of these regulations, ICF, Inc., performed a preliminary cost analysis of these three alternatives.

The costing methodology used by ADL in its analysis of the PMN form proposed on October, 16, 1979 was used as a basis for costing these alternatives. This methodology was outlined in section C(1) above. In summary, in order to estimate the cost of completing these alternatives, estimates were first made of the number of hours necessary to complete such requirements. It is expected that complying with these alternatives will involve clerical, technical, and managerial personnel. To estimate the total cost of completing a notice under these alternatives, average hourly wage rates by labor category were mutliplied by the respective number of hours needed to complete the required notice. The cost of asserting and substantiating claims of confidentiality may be a separate cost of complying with each of these alternatives, and is estimated in section V.C.2. of this notice. A support document containing the costing methodology for these alternatives entitled "Cost Estimations of Alternative Processor Notification Requirements" is available on request from EPA. Contact the Industry Assistance Office, whose address is listed at the beginning of this notice.

It should be noted that these cost estimates are preliminary. The complete methodology and complete explanation of how the final cost estimates were derived will be provided when the economic impact of the processor rule and the section 5 proposal are proposed in the summer of 1980.

1. *Section 8(a) reporting for processors.* Under this alternative, processors would provide EPA with the company name, contact person,

chemical identity, amount processed, information on consumer and worker exposure, a description of the categories of use, and name of the supplier of the substance, as well as physical and chemical properties data and health and safety data. Table II provides the estimated hours and the average wage rate as well as the estimated cost of complying with this alternative.

Table II.—*Cost of Submitting a Section 8(a) Notice*

Labor category	Estimated hours to complete alternative 1 notice		Average wage rate	Estimated cost of complying with alternative 1	
	Minimum	Maximum		Minimum	Maximum
Clerical	4.87	19.97	$10	$48.70	$199.70
Techincal	18.50	133.00	25	462.50	3,325.00
Managerial	4.25	18.50	50	212.50	925.00
Total cost				723.70	4,449.70

The total cost of submitting a section 8(a) notice as outlined here ranges from $723.70 to $4,449.70

2. *Section 8(a) reporting and section 5 reporting.* This alternative involve either section 8(a) notification, as outlined under alternative 1, or section 5 notification depending on EPA's categorization of the substance. Section 5 notification requirements would be reserved for substances of particular concern based on toxicity or exposure.

The cost of complying with these options has been presented above. The cost of filing a section 8(a) notice would range from $723.70 to $4,449.70. The cost of filing a section 5 notice ranges from $1,155 to $8,925. For a breakdown of the estimated hours and wage rates for completing each type of notice, see Tables I and II above.

3. *No processor reporting.* Because this alternative does not require processors to submit notices prior to the nonexempt commercial processing of exempt substances, there is no cost to industry for submitting notices.

E. Economic Impacts and Conclusion

The economic impacts of this proposed rule will depend on how many processors will be covered, and how many notices they will submit. Data or data estimates, in both areas are not currently available. However, the Agency is performing an economic impact analysis of all premanufacture notification rules and forms, including the requirement for processor notification.

In its economic impact analysis, ICF, Inc., the economics contractor, will discuss the tradeoffs between alternative processor notification rules. The alternatives are analyzed in terms of the following categories:

1. *Out-of-pocket expenditures.* This category includes the direct cost of filling out the form and the cost of contacting a supplier for additional information on a substance.

2. *Time delays.* ICF will estimate the significance of the expected delay in getting a processed substance into commerce.

3. *Disclosure.* This category involves the risk of disclosing processing intentions and depends to a large extent on conclusions regarding confidentiality.

4. *Risk of adverse determinations.* This category is related to the amount of regulatory authority granted under each alternative. A processor, faced with the possibility of having his substance heavily regulated, may be discouraged from processing, and this would represent an added burden to industry.

5. *Uncertainty.* Relative uncertainty regarding EPA discretion in implementing a processor rule is evaluated across the alternatives.

The final assessment of the economic impacts of a processor reporting rule hinges on the impacts of other section 5 provisions, i.e., confidentiality, supplemental reporting, etc. Therefore, the economic impacts of a processor reporting rule will be assessed as part of the analysis of the general section 5 rulemaking. This analysis should be completed by summer of 1980.

VI. Comments and Public Meetings

The Agency requests that each commenter identify any chemicals which would have required notification under this proposed rule. Although this is obviously not a prerequisite to the submission of comments, it will provide an important information base so that EPA can better assess the impacts of the proposed rule. A brief history of the R&D, manufacturing, and processing of each chemical listed should be included as well as a description of the persons (manufacturer, processor) involved at each stage. This brief history should note (1) the timing of each activity, (2) the amounts of the chemical involved, (3) the type of exempt chemical involved, and (4) any subsequent commercial manufacture of the chemical subject to TSCA.

EPA also invites estimates on the number of such notices that would be received per year under this rule. Any estimate should be accompanied by a full explanation of the methodology and of the assumptions, variables, and data on which it is based.

Because this proposal is based in part on the January 10, 1979 proposal, and because the Agency has received many comments on aspects of this proposal covered by the January and October proposals, EPA is allowing a 60-day comment period. Do not resubmit comments on the January 10 and October 16, 1979 proposed rules and forms. When EPA promulgates the final rules, the comments on this notice will be evaluated with the comments on the January and October proposals.

After written comments are submitted, EPA officials responsible for developing this proposal will be available to meet upon request with persons interested in discussing specific issues raised by the proposal. These public meetings-by-request will be held on Wednesday, October 22 and Thursday, October 23, 1–5 p.m., in room 2126 at EPA, Waterside Mall, 401 M Street, S.W., Washington, D.C. Persons interested in participating should call the Industry Assistance Office (800–424–9065 or, in Washington, 554–1404). All meetings will be transcribed and entered in the official public record.

VII. Public Record

EPA has established a public record for this rulemaking (docket number OPTS 050002) that is available for inspection in the OPTS Reading Room from 9:00 a.m. to 5:00 p.m., on working days (Room 447E, 401 M Street, S.W., Washington, D.C. 20460). This record includes all of the information considered by the Agency in developing this proposal. The Agency will supplement the record with additional information as it is received. The record includes all of the categories of information listed in the January 10, 1979 Notice of Proposed Rulemaking (44 FR 2263) and the October 16, 1979 Notice of Proposed Rulemaking (44 FR 59764). In particular, the record has been supplemented with the following documents:

(1) USEPA—OPTS. "Proposed Processor Requirements: Notice of Proposed Rulemaking."

(2) USEPA—OPTS. [Cost Estimations of Alternative Processor Notification Requirements: Contract No. 68-01-1878.]

The docket of the record that details its specific contents to date is available in the OPTS Reading Room. EPA welcomes comments on any additional material that should be part of the record to date. EPA will identify the complete rulemaking record on or before the date of promulgation of these requirements, as prescribed by TSCA section 19(a)(3).

Note.—Under Executive Order 12044, Improving Government Regulations, EPA must determine whether a proposed regulation is "significant" and therefore subject to the requirements of the order. On May 29, 1979, EPA published a report on how it will implement the order (44 FR 30988). Consistent with the order and EPA's report, the Agency has reviewed the proposed Premanufacture Notification Requirements and Review Procedures (44 FR 2242, January 10, 1979) and the rules that are proposed in this Federal Register notice. EPA has determined that they are "major significant" regulations, as that term is defined in the Agency's report (44 FR 30989-90). EPA will issue them in accordance with the requirements of the report concerning internal Agency development and review, public participation, economic analysis, and consideration of other regulatory impacts and alternatives.

EPA intends to evaluate the benefits and costs of this processor notification rule within 5 years after its promulgation, as part of its evaluation plan for the larger section 5 rule. (Secs. 5, 8, and 14 of the Toxic Substances Control Act (15 U.S.C. 1604, 2607, and 2613.))

Dated: August 5, 1980.

Douglas M. Costle,

Administrator.

It is proposed that proposed Part 720 be amended as follows:

1. In proposed § 720.10 by further proposing to revoke and reserve paragraphs (a)(3) and (b)(2) and add a new paragraph (c) to read as follows:

§ 720.10 Persons who must report.

(a) * * *

(3) [Reserved]

* * * * *

(b) * * *

(2) [Reserved]

* * * * *

(c) Pursuant to the authority of TSCA section 5(a)(1) and (2), persons must admit a notice under the provisions of this Part if they intend to process for a commercial purpose a new chemical substance that was originally manufactured or imported in bulk or as part of a mixture.

(1) For a purpose excluded from the definition of chemical substance under TSCA section 3(2) (including use as a pesticide; tobacco or any tobacco product; specified nuclear material; food, food additive, drug, cosmetic, or device); or

(2) Under any exemption of TSCA section 5(h), or §§ 720.14 or 720.15; or

(3) Only prior January 1, 1975; or

(4) As a byproduct as defined in § 720.2.

2. In proposed § 720.11(b) by further proposing to revise paragraph (b) and the "Note" at the end of the section to read as follows:

§ 720.11 Persons not subject to premanufacture notification requirements.

* * * * *

(b) Except as provided by § 720.10(c), any person who intends only to process or use a new chemical substance for commercial purposes.

Note.—Unless the notice is filed by a processor under § 720.10(c), a notice is invalid under § 720.34(b) if filed by a person other than a manufacturer or importer.

3. In proposed § 720.12 by further proposing to add paragraphs (b)(3) and (c) to read as follows:

§ 720.12 Chemical substances for which premanufacture notice must be submitted.

* * * * *

(b) * * *

(3) A person who wishes to establish a bona fide intent to process a chemical substance and who does not possess the data specified in paragraph (b)(2) (iii) or (iv) of this section must submit (i) a statement certifying that he does not possess these data and (ii) an explanation of why he does not possess these data.

(c)(1) If a person proposes to process a chemical substance as provided in § 720.10(c) and wishes to ascertain whether the chemical substance is on the inventory, but does not know the chemical identity of the substance he proposes to process, the person must attempt to obtain the chemical identity directly from the manufacturer, importer, processor, supplier, and anyone from whom he received the substance.

(2) If the person who proposes to process the substance is unable to obtain the chemical identity of the substance from these persons, he should comply with § 720.12(b)(1) through (3) and supply evidence of his attempts to ascertain the chemical identity. EPA may issue a reporting requirement under section 8(a) of the Act to obtain the chemical identity from a manufacturer, importer, or processor. EPA will follow the procedures outlined in § 720.50(b) when it imposes a requirement to report chemical identity.

(3) When the manufacturer, importer, or processor informs EPA of the chemical identity of the substance under paragraph (c)(2) of this section, EPA will provide the chemical identity to the person who proposes to process the substance unless the person providing the chemical identity claims the chemical identity confidential pursuant to this Part. If the chemical identity is claimed confidential by the person providing the chemical identity to EPA, EPA will follow the procedures under § 720.12(b) (4) through (7). EPA will provide a final response to an inquiry under these procedures within 45 days after the Agency's receipt of the chemical identify under paragraph (c) of this section.

4. In proposed § 720.20 by further proposing to add paragraph (f)(5) to read as follows:

§ 720.20 General provisions.

* * * * *

(f) * * *

(5) If EPA receives a notice which does no include the chemical identity of the substance from a person who intends to process the substance, and the notice indicates that the submitter has attempted without success to obtain the chemical identity, EPA may issue a supplemental reporting requirement under § 720.50(b) to obtain this information from the manufacturer, importer, or processor of the chemical substance. In such cases, the notification period will begin when EPA is able to identify the new substance.

* * * * *

5. By proposing to add a new § 720.24 to read as follows:

§ 720.24 Chemical substances processed for a commercial purpose.

(a) The provisions of this subpart C apply to each person who is required to submit a notice under § 720.10(c).

(b) A person subject to § 720.10(c) must use the Processor Notice Form. He must provide the information described in § 720.22 and requested in the form and not designated "optional," insofar as such information is known to or reasonably ascertainable by him. In addition, in accordance with § 720.23, the processor must append to the form any test data in his possession or control and descriptions of other data concerning the environmental and health effects of the substance.

(c) In addition, persons who are required to submit notices under § 720.10(c) must submit the following data:

(1) The name of the person(s) who manufactured or imported the substance (if different from the submitter).

(2) Future sources of the substance, if any.

(3) Where the submitter intends to manufacture the substance and descriptions of the intended manufacturing process, to the extent it is known to or reasonably ascertainable.

(4) The amount of the chemical to be processed.

(5) All information in the possession or control of the submitter pursuant to § 720.14(a)(2) or (d).

6. In proposed § 720.34 by revising paragraph (b)(1)(vii) to read as follows:

§ 720.34 Deficiencies in the premanufacture notice.

* * * * *

(b) Invalid notice.[1] * * *

(vii) Except as specifically authorized by § 720.10(c), submittal of a premanufacture notice by someone other than the person who intends to manufacture or import the chemical substance, or his designated agent;

* * * * *

7. In proposed § 720.50 by revising paragraph (b) to redesignate the existing proposed text of paragraph (b) as paragraph (b)(1) and adding a new paragraph (b)(2) to read as follows:

§ 720.50 Reporting requirements under section 8(a) and section 5 of the act.

* * * * *

(b) Manufacturer or importer of an unknown reactant.

(1) If EPA receives a premanufacture notice from a person who identifies the new chemical substance as a product of a reaction which includes at least one unknown reactant, and if the person demonstrates that he has attempted to obtain information concerning the identity of the reactant from the manufacturer or importer of the reactant, EPA may require the manufacturer or importer of the unknown reactant(s) to report its identity or composition to EPA.

(2) If EPA receives a notice pursuant to § 720.10(c) that does not contain the chemical identity, and if the person demonstrates that he has attempted to obtain information concerning the chemical identity from the manufacturer, importer, or processor of the substance, EPA may require the manufacturer, importer, or processor of the chemical substance to report its identity to EPA.

[FR Doc. 80-24662 Filed 8-14-80; 8:45 am]
BILLING CODE 6560-01-M

Federal Register

Friday
August 15, 1980

Part V

Department of Labor

Mine Safety and Health Administration

Pattern of Violations

DEPARTMENT OF LABOR

Mine Safety and Health Administration

30 CFR Part 104

Pattern of Violations

AGENCY: Mine Safety and Health Administration (MSHA), Department of Labor.

ACTION: Proposed rule.

SUMMARY: This proposed rule sets forth criteria for identifying mines which have a pattern of violations of mandatory health or safety standards which are of such nature as could have significantly and substantially contributed to the cause and effect of mine health or safety hazards pursuant to § 104(e) of the Federal Mine Safety and Health Act of 1977. Under section 104(e), the Secretary of Labor is directed to make such rules as he deems necessary to establish such criteria. This proposed rule also sets forth the procedures MSHA would follow to issue a notice to an operator that such a pattern exists at its mine.

DATES: Comments must be received by October 14, 1980.

ADDRESS: Send comments to the Department of Labor, Mine Safety and Health Administration, Office of Standards, Regulations and Variances, Room 631, Ballston Tower No. 3, 4015 Wilson Boulevard, Arlington, Virginia 22203.

FOR FURTHER INFORMATION CONTACT: Frank A. White, Mine Safety and Health Administration, Office of Standards, Regulations and Variances, 4015 Wilson Boulevand, Arlington, Virginia 22203, Telephone (703) 235-1910.

SUPPLEMENTARY INFORMATION:

Rulemaking Authority

Section 104(e) of the Federal Mine Safety and Health Act of 1977 directs the Secretary of Labor to issue a notice to an operator if it has a pattern of violations of mandatory health or safety standards in coal or other mine which are of such nature as could have significantly and substantially contributed to the cause and effect of coal or other mine health or safety hazards (hereinafter "pattern of violations"). Section 104(e)(4) directs the Secretary of Labor to make such rules as he deems necessary to establish criteria for determining when such a pattern of violations exists.

Section 508 of the Act authorizes the Secretary of Labor to issue such regulations as he "deems appropriate to carry out any provision of this Act."

Pursuant to sections 104(e) and 508, the Secretary of Labor is commencing rulemaking by the publication of this proposed rule and a solicitation for public comment.

Legislative History and Purpose

When Congress strengthened existing mine safety and health protection by enacting the Federal Mine Safety and Health Act of 1977, Pub. L. 91-173 as amended by Pub. L. 95-164 (Act), it was particularly concerned about the problem of the mine operator who has a history of persistent violations of mandatory health and safety standards. The enforcement mechanisms of the Mine Act's predecessor legislation (the Federal Coal Mine Health and Safety Act of 1969 and the Metal and Nonmetallic Mine Safety Act of 1966) had not always been effective in dealing with these situations. Correcting the larger underlying problems which were evidenced by recurrent individual violations was a major concern of Congress when it passed the new legislation. As one means to address these problems, Congress added a new section (104(e)), which authorized the Department of Labor to deal with mines that have developed a "pattern of violations." In adding the pattern of violations provision Congress explicitly expressed its intent in the Senate Committee Report, which states:

> The Committee's intention is to provide an effective enforcement tool to protect miners when the operator demonstrates his disregard for the health and safety of miners through an established pattern of violations. S. Rep. No. 181, 95th Cong., 1st Sess. 32 (1977).

The Senate Committee recognized that numerous mining disasters in both the coal and the metal/nonmetal industries demonstrated an inadequacy in existing law and existing mine safety and health programs.

The legislative history emphasizes in the committee reports and floor debates that section 104(e) is primarily designed as an enforcement mechanism to be used against serious and repeat offenders, particularly those habitual violators who have not responded to other efforts to bring their mines into compliance with health and safety standards.

Although section 104(e) does not define "pattern of violations," the legislative history gives some general guidance on the kinds of situations to which the provision should apply. The Senate Committee stated its intent that:

> A pattern may be established by violations of different standards, as well as by violations of a particular standard. Moreover, while the Committee considers that a pattern is more than an isolated violation, a pattern does not necessarily mean a prescribed number of violations of predetermined standards nor does it presuppose any element of intent or state of mind of the operator: S. Rep. No. 181, 95th Cong., 1st Sess. 33 (1977).

After setting forth this general guidance, Congress authorized the Secretary of Labor to formulate specific criteria which would be broad enough to encompass the varied mining activities within the Act's coverage. The Secretary was granted wide discretion in establishing these criteria, and Congress further recognized that since the pattern of violations provision was new and still untried, that the criteria might need to be modified as experience with the provision increased.

Criteria For Determining a Pattern of Violations

Under the proposed rule, available data which reflect each mine's overall safety and health record during a review period would be compiled from inspection records and other relevant sources. These data are already being used to implement other provisions of the Federal Mine Safety and Health Act and would be adapted to implement section 104(e). Data would be reviewed as often as necessary but no less frequently than once each year. A notice that a pattern of violations exists may be issued whenever circumstances warrant.

Typically, a pattern of violations would be exemplified either by an unusually large number of violations which are of such nature as could have significantly and substantially contributed to the cause and effect of a mine safety or health hazard (hereinafter "significant and substantial violations") and little or no indication of improved compliance after a period of time, or by a worsening trend of significant and substantial violations which indicates a greater than normal risk of either a disaster or individual accidents, injuries or illnesses. Under the proposed rule, the pattern of violations may include violations of many unrelated safety and health standards or it may involve violations of one standard or a few particular categories of safety and health standards (for example, ventilation, roof control, haulage, noise, etc.). In many cases where a pattern of violations would be found to exist, there would be a history of withdrawal orders for significant and substantial violations which have not induced the mine operator to improve safety and health practices.

Congress intended for the criteria to be flexible. Although under the proposed rule a pattern would be based on a mine's record of "significant and

substantial" violations, factors other than the mere number of such violations would be considered. The proposed criteria, therefore, include both quantitative and qualitative factors. The factors set out in the proposed regulation to be considered in applying the criteria would serve as guidelines, but would not prevent MSHA from applying a particular criterion on the basis of other factors. Additionally, depending on the individual situation, the weight given to a particular criterion or factor may vary. The determination that a pattern exists at a particular mine would not be made mechanically, but would be a documented judgment based on the relevant facts and circumstances, including the enforcement history and overall safety and health conditions at the mine. Each determination would be in writing and would set forth the reasoning used to arrive at the determination.

Procedures

If a pattern notice is issued to an operator, any subsequent inspection which reveals another significant and substantial violation will result in the issuance of a withdrawal order until the violation is abated. There will be a sequence of withdrawal orders upon the subsequent finding of any significant and substantial violation until a complete inspection of the mine reveals no significant and substantial violation.

Although a pattern of violations notice which is subsequently followed by withdrawal orders would provide a strong incentive for the affected operator to correct an already existing pattern, it is clear that Congress intended for this sanction, insofar as possible, to prevent such a critical situation. Realizing that a pattern of violations will lead to severe consequences, chronic violators would be induced to comply with the spirit as well as the letter of the law. The thrust of the entire Act is to protect the health and safety of miners, which is most effectively accomplished when serious underlying problems are addressed before they reach crisis proportions.

Initial screening procedures, which would include examination of inspection records, would be used to identify mines which may be developing a pattern of violations. Although not required by the proposed rule, MSHA may as a matter of policy, alert affected mine operators that this initial screening has identified that operator's mine as a potential recipient of a pattern notice, which may be issued unless the mine's compliance record is adequately improved before the District Manager makes a determination to issue a notice that a pattern of violations exists at the mine.

After the initial screening, the criteria would be applied to each of the mines which has been so identified. If this further analysis indicates that a pattern of violations exists at any of the mines under consideration, MSHA would send to the affected operator and miners' representative a letter stating MSHA's intent to issue a pattern notice. This letter of intent would specify the basis for MSHA's proposed action and would give the operator 15 calendar days to review the documents upon which the determination is based, to submit additional information and to submit a written request to confer with the District Manager. If the operator submits such a request, issuance of the pattern notice may be stayed for a reasonable period of time, to be determined by the District Manager, to allow for this informal review and conference.

If the operator does not respond within the alloted time, a pattern notice would be issued promptly. If the operator responds, but the additional information does not indicate a valid reason to defer the issuance of a pattern notice, the notice would be issued. However, if the additional information indicates that a pattern notice should not be issued at this time, the operator would be so notified. In each of these cases, the notification would state the specific reasons and data supporting whatever determination was made.

Executive Order 12044

It has been determined that this document does not contain a major proposal requiring the preparation of a regulatory analysis under Executive Order 12044 and the Department of Labor's final guidelines implementing the Executive Order (44 FR 5570, January 28, 1979).

Drafting Information

The principal persons responsible for drafting this document are: Vernon R. Denton, James R. Horton, Nancy S. Hyde, and Inga A. Watkins.

Dated: August 11, 1980.

Robert B. Lagather,

Assistant Secretary for Mine Safety and Health.

1. It is proposed to add a new Subchapter Q, Part 104 to Chapter I, Title 30 Code of Federal Regulations as set forth below:

SUBCHAPTER Q—PATTERN OF VIOLATIONS

PART 104—PATTERN OF VIOLATIONS

Sec.
104.1 Scope and purpose.
104.2 Definitions.
104.3 Identification of mines developing a potential pattern of violations.
104.4 Criteria for determining when a pattern of violations exist.
104.5 Procedures for issuance of notice.

Authority: Secs. 104(e) and 508 of the Federal Mine Safety and Health Act of 1977, Pub. L. 91-173, 83 Stat. 803 as amended by Pub. L. 95-164, 91 Stat. 1301, 1299 (30 U.S.C. 814(e), and 957).

§ 104.1 Scope and purpose.

This part sets forth the criteria and procedures the Mine Safety and Health Administration (MSHA) will follow in making a determination as to whether there is a pattern of violations of mandatory health or safety standards in a mine which are of such nature as could have significantly and substantially contributed to the cause and effect of mine health or safety hazards (pattern of violations). In making a determination, MSHA will only consider violations occurring after March 8, 1978.

§ 104.2 Definitions.

As used in this Part:

(a) "MSHA" means the United States Department of Labor, Mine Safety and Health Administration.

(b) "Significant and substantial violations" means violations of mandatory health or safety standards which are of such a nature as could have significantly and substantially contributed to the cause of effect of mine safety or health hazards. Only violations for which a citation or withdrawal order was issued and which have become final before the Federal Mine Safety and Health Review Commission shall be considered in the application of the criteria.

(c) "Pattern of violations" means a pattern of violations of mandatory health or safety standards in a coal or other mine which are of such nature as could have significantly and substantially contributed to the cause and effect of coal or other mine health or safety hazards.

(d) "Review period." A review period for all underground mines shall consist of at least three months. A review period for surface mines shall consist of at least six months.

(e) "Similar size" means classified by MSHA to be within the same category with respect to the annual hours worked at metal/nonmetal mines and the annual tonnage of coal mines as set forth below.

(1) Size of metal/nonmetal mine.

Annual hours worked at mine:

10,000 and under
Over 10,000 to 20,000
Over 20,000 to 30,000

Over 30,000 to 60,000
Over 60,000 to 100,000
Over 100,000 to 200,000
Over 200,000 to 300,000
Over 300,000 to 500,000
Over 500,000 to 700,000
Over 700,000 to 1 million
Over 1 million

(2) Size of coal mine.

Annual tonnage of mine:

15,000 and under
Over 15,000 to 30,000
Over 30,000 to 50,000
Over 50,000 to 100,000
Over 100,000 to 200,000
Over 200,000 to 300,000
Over 300,000 to 500,000
Over 500,000 to 800,000
Over 800,000 to 1.1 million
Over 1.1 million to 2 million
Over 2 million

As used in paragraphs (e) (1) and (2) of this section, the terms "annual tonnage" and "annual hours worked" means tonnage produced and hours worked in the previous calendar year or in the case of a mine opened or owned less than one full calendar year the tonnage and hours worked prorated to an annual basis.

(f) "Similar type" means mines which are classified by MSHA to be within the same category with respect to the type of operation as set forth below:

Metal and Nonmetallic Types of Operations

Open pit
Other surface (sand, gravel)
Crushed stone (and dimension)
Dredge
Mills
Underground

Coal Mines—Types of Operations

Underground
Surface
Preparation plants not part of underground or surface operations

(g) "Related standards" means mandatory safety or health standards which are within the same subpart of section of the Code of Federal Regulations or which are designed to protect miners from the same or a similar hazard.

§ 104.3 Identification of mines developing a potential pattern of violations.

(a) MSHA will compile objective data to document the operator's overall safety and health record, including violations of mandatory safety and health standards. The data will be classified into categories which collectively reflect both the enforcement activity and management practices at each mine during three-month periods for underground mines and six-month periods for surface mines as set forth below:

(1) Total number of Section 104(a) citations for significant and substantial violations.

(2) Comparative number of significant and substantial violations in successive inspections.

(3) Total number of Section 104(d) citations and orders for unwarrantable failure violations.

(4) Total number of Section 104(b) withdrawal order for failure to obate significant and substantial violations.

(5) Total number of Section 107(a) imminent danger orders which resulted from significant and substantial violations.

(6) Total number of recurring significant and substantial violations of the same or related standards.

(7) Total number of violations of regulations concerning the submittal of reports or plans, examinations, and training of personnel.

(8) Operator's accident/injury/illness/fatality incidence rate.

(9) Inspector's statements for citations and orders involving significant and substantial violations.

(10) Total number of inspection days.

(b) The data will be reviewed as often as necessary but no less frequently than once each year and will be used to bring to the District Manager's attention those mines which warrant consideration to determine whether a pattern of violations exists or is developing. The information from any one or any combination of the above categories may be sufficient to bring a particular mine to the attention of the District Manager. The data will undergo further screening and analysis, including review by a committee appointed by the District Manager which shall be called the District Review Committee. The District Review Committee shall consist of a minimum of three persons selected by the District Manager, at least one of whom shall be a Subdistrict Manager or senior level supervisor and the remainder of whom shall be representatives of the Secretary of Labor with no less than 2 years of experience. The District Review Committee will consider both quantitative and qualitative factors as set forth in the criteria in § 104.4 of this part to make a recommendation to the District Manager as to whether a pattern of violations exists at a particular mine.

(c) Each criterion shall be evaluated both individually and in relation to the others to determine if there is a pattern of violations at a mine. A determination that a pattern of significant and substantial violations exists at a mine may be made on the basis of affirmative findings with respect to any one or any combination of the criteria or upon consideration of all of the criteria as a whole. The weight to be given to a particular criterion may vary with the individual facts and circumstances of each case.

§ 104.4 Criteria for determining when a pattern of violations exist.

To determine whether a pattern of violations exists at a particular mine, MSHA shall consider the following criteria:

(a) There has been a chronic recurrence of significant and substantial violations at the mine during one or more review periods. Generally, in applying this criterion, MSHA shall consider but is not limited to the following factors:

(1) Whether the average number of significant and substantial violations cited per inspection day was at or above the 90th percentile for all mines of similar size and type. This factor shall be applied as follows: All the mines in a particular size and type category shall be ranked numerically, based on each mine's average number of significant and substantial violations cited per inspection day. The mines with the highest numbers in this ranking have the most significant and substantial violations cited per inspection day, compared to other mines of similar size and type. If a mine is within the highest 10 percent of all the mines of similar size and type when ranked according to average number of significant and substantial violations cited per inspection day, this mine may be considered to have a chronic recurrence of significant and substantial violations during the review period.

(2) Whether the average number of significant and substantial violations cited per inspection day was at or above the 75th percentile for all mines of similar size and type and has increased since a previous review period. This factor shall be applied as follows: All mines in a particular size and type category shall be ranked numerically based on each mine's average number of significant and substantial violations cited per inspection day. If a mine is within the highest 25 percent of all the mines of similar size and type when ranked in this manner, and the average number of significant and substantial violations cited per inspection day has increased since a previous review period, this mine may be considered to have a chronic recurrence of significant and substantial violations during the review period.

(3) Whether a disproportionate number of the significant and

substantial violations cited per inspection day were violations of the same or a related standard. The number may be considered disproportionate if more than 25 percent of the significant and substantial violations are violations of the same or a related standard.

(b) Enforcement mechanisms of the Federal Mine Safety and Health Act of 1977 other than section 104(a) citations have been utilized during one or more review periods at the mine to address the safety or health hazards that could have been created by significant and substantial violations cited during a review period. Generally, in applying this criterion, MSHA shall consider, but is not limited to the following factors:

(1) Whether any withdrawal orders were issued pursuant to section 104(d)(1) of the Federal Mine Safety and Health Act of 1977 and whether any section 104(d)(2) orders were issued.

(2) Whether there were any § 107 imminent danger orders issued which resulted from violations of the same or related standard as any of the significant and substantial violations cited during a review period.

(c) The history of accidents, injuries, illnesses and fatalities at the mine during one or more review periods indicates that the significant and substantial violations cited at the mine have had an impact on the overall safety and health of the miners. Generally, in evaluating this criterion, MSHA shall consider but is not limited to the following factors:

(1) Whether the incident rate or severity measure has been above the national average.

(2) Whether there were any accidents, injuries, illnesses or fatalities of the type which the violated standards were designed to prevent.

(d) The management at the mine has demonstrated poor safety or health practices or a lack of a general commitment to effectively protecting the safety and health of the miners during one or more review periods. Generally, in evaluating this criterion, MSHA shall consider, but is not limited to the following factors:

(1) The degree of good faith the operator demonstrated in attempting to achieve rapid compliance after receiving the citations for the significant and substantial violations as evidenced by such things as:

(i) Extraordinary efforts to achieve abatement of the violation within the time given; or

(ii) Utilization of all available resources and personnel to abate the violation as rapidly as possible; or

(iii) Utilization of a method of abatement which was likely to prevent the recurrence of the violation.

(2) The gravity of the significant and substantial violations as evidenced by such things as:

(i) The probability of occurrence of the events the cited standards were directed against; or

(ii) The types of injuries or illnesses that could be expected to result from the events the cited standards were directed against; or

(iii) The number of people who would be affected if the events occurred.

(3) The degree of negligence of the operator with respect to the significant and substantial violations.

(4) Whether there have been recurrent violations of standards or regulations concerning requirements for the submittal of reports or plans, the conduct of preshift or on shift examinations or qualifications and training of personnel.

(5) Whether there were any citations changed to withdrawal orders for failure to abate significant and substantial violations.

(6) What resources the operator devoted to mine safety and health.

(e) There were no extenuating circumstances at the mine beyond the management's control during the review periods which strongly mitigate affirmative findings with respect to any of the above criteria.

§ 104.5 Procedures for issuance of notice.

(a) When the District Manager makes a preliminary determination that a particular mine has a pattern of violations, the District Manager shall inform the operator and the miner's representative in writing (certified mail, return receipt requested or personal service) of MSHA's intent to issue a notice that a pattern of violations exists at that mine. The letter of intent shall specify the basis for the determination and shall give the operator and representative of miners 15 calendar days after receipt of the letter of intent to provide additional information for consideration, review all documents upon which the determination is based, and submit a written request for a conference with the District Manager.

(b) Upon written request by the operator or representative of miners during the 15-calendar-day period, the District Manager shall arrange for a conference to be held as expeditiously as possible. The operator and representative of miners shall be invited to attend any conference held pursuant to this section.

(c) After a conference is held or additional information is submitted, the District Manager will notify the operator in writing either (1) that a pattern of violations exists, or (2) that a notice of pattern will not be issued at this time. In either case, the District Manager will state the reasons for the determination, which shall be the final determination of MSHA.

(d) If the operator does not make a request to review the documents, submit additional information or have a conference within the allotted time, the operator shall be notified in writing, pursuant to section 104(e) of the Act, that a pattern of violations exists at its mine effective immediately upon receipt of notification.

(e) The operator shall post all letters of intent and notices on the mine bulletin board.

[FR Doc. 80-24614 Filed 8-14-80; 8:45 am]
BILLING CODE 4510-43-M

federal register

Friday
August 15, 1980

Part VI

Department of Energy

Economic Regulatory Administration

Obtaining Crude Oil for the Strategic Petroleum Reserve by Exchange of Naval Petroleum Reserves Crude Oil and Other Means

DEPARTMENT OF ENERGY

Economic Regulatory Administration

10 CFR Part 211

[Docket No. ERA-R-80-23]

Obtaining Crude Oil for the Strategic Petroleum Reserve by Exchange of Naval Petroleum Reserves Crude Oil and Other Means

AGENCY: Economic Regulatory Administration, Department of Energy.

ACTION: Notice of proposed rulemaking and public hearing.

SUMMARY: The Economic Regulatory Administration (ERA) of the Department of Energy (DOE) is proposing alternative amendments to the Mandatory Petroleum Allocation Regulations, 10 CFR Part 211, to establish procedures for obtaining crude oil for storage in the Strategic Petroleum Reserve (SPR) by exchange of Naval Petroleum Reserves (NPR) crude oil and other means. The first alternative proposal would establish a new provision in the allocation regulations authorizing DOE to require the fifteen so-called major refiners and other refiners with refining capacities in excess of 175,000 barrels per day to supply crude oil for storage in the SPR in exchange for NPR crude oil. This proposal also would authorize DOE to compensate the refiner delivering oil to the SPR in cash.

The second proposal would amend the current crude oil Buy/Sell Program regulations to add the United States Government to the Buy/Sell List as a buyer of crude oil to be stored in the SPR, thereby increasing the total sales obligations of the refiner-sellers for an allocation period. Each refiner-seller would have the option of discharging its sales obligation by a sale to the SPR only, to small refiners only, or to both. Under this alternative DOE would elect to compensate a refiner-seller delivering oil to the SPR by exchanging a quantity of NPR oil or by making a cash payment to the refiner-seller. Additional provisions relating to these general alternatives are also proposed.

DATES: Written comments are due by September 15, 1980, 4:30 p.m. Hearing Dates: Los Angeles hearing, August 27, 1980; Washington, D.C. hearing, September 4, 1980. Requests to speak by 4:30 p.m., August 20, 1980, for the Los Angeles hearing; August 28, 1980, for the Washington, D.C. hearing.

ADDRESSES: Requests to speak at the Washington, D.C. hearing, and all comments should be sent to Office of Public Hearing Management, Economic Regulatory Administration, Room B210, Docket No. ERA-R-80-23, 2000 M Street, N.W., Washington, D.C. 20461. Requests to speak at the Los Angeles hearing should be sent to Department of Energy, Region IX, Attn: Carey Osborn, 333 Market Street, San Francisco, California 94111, (415) 764-7029.

HEARING LOCATIONS: Washington, D.C. hearing: Room 2105, 2000 M Street, N.W., Washington, D.C. Los Angeles hearing: Room 207, Los Angeles Convention Center, 1201 Figuero, Los Angeles, California.

FOR FURTHER INFORMATION CONTACT:

Cynthia Ford (Hearing Procedures), Economic Regulatory Administration, Room B210, 2000 M Street NW., Washington, D.C. 20461, (202) 653-3971

William Webb (Office of Public Information), Economic Regulatory Administration, Room B110, 2000 M Street NW., Washington, D.C. 20461 (202) 653-4055

Josette Maxwell (Office of Regulations and Emergency Planning), Economic Regulatory Administration, Room 7202D, 2000 M Street NW., Washington, D.C. 20461 (202) 653-3256

Robert G. Bidwell, Jr. (Office of Petroleum Operations), Economic Regulatory Administration, Room 6128, 2000 M Street NW., Washington, D.C. 20461 (202) 653-3459

Harry A. Jones (Strategic Petroleum Reserve Office), Room 410, 1726 M Street NW., Washington, D.C. 20461 (202) 634-5510

Craig S. Bamberger (Office of General Counsel—Strategic Petroleum Reserve), Department of Energy, Room 5E-064, 1000 Independence Avenue SW., Washington, D.C. 20585 (202) 252-2900

Samuel M. Bradley or Jeffrey D. Stoermer (Office of General Counsel—Petroleum Regulations), Department of Energy, Room 6A-127, 1000 Independence Avenue SW., Washington, D.C. 20585 (202) 252-6754 or 252-6911

Peter M. Frank (Office of General Counsel—Naval Petroleum Reserve), Department of Energy, Room 6447, 12th and Pennsylvania Avenue NW., Washington, D.C. 20461 (202) 633-8683

SUPPLEMENTARY INFORMATION:

I. Background
- A. Strategic Petroleum Reserve
- B. Naval Petroleum Reserves
- C. Use of Naval Petroleum Reserves Crude Oil in the Strategic Petroleum Reserve

II. Alternative Proposed Amendments
- A. Alternative Proposal No. 1: Allocation of Crude Oil For the Strategic Petroleum Reserve Through Exchange of Naval Petroleum Reserves Crude Oil or Regulated Sale
- B. Alternative Proposal No. 2: Adding the Strategic Petroleum Reserve as a Buyer to the Buy/Sell List
- C. Exchange Ratio for Naval Petroleum Reserves Crude Oil

III. Proposed Special Temporary Relief for Small Refiners Dependent on Naval Petroleum Reserves Oil

IV. The Entitlements Program

V. Request for Additional Comments
- A. Delivery of Naval Petroleum Reserves Crude Oil to Participating Refiners
- B. Legal Issues

VI. Written Comment and Public Hearing Procedures
- A. Written Comments
- B. Public Hearings

VII. Procedural Requirements

I. Background

A. Strategic Petroleum Reserve

The Energy Policy and Conservation Act (EPCA), Pub. L. 94-163, 42 U.S.C. section 6231 *et seq.*, signed into law on December 22, 1975, authorized the creation of the SPR. The objective of the SPR is to provide for the storage of substantial quantities of petroleum in order to diminish U.S. vulnerability to the effects of a severe energy supply interruption, and to permit the U.S. to carry out its obligations under the Agreement on an International Energy Program.

An SPR Plan, which includes detailed proposals for development of the SPR, was transmitted to the Congress as Energy Action No. 10 on February 16, 1977, and became effective on April 16, 1977. Subsequently, to accelerate the development schedule, Plan Amendment No. 1 was transmitted to the Congress by the Federal Energy Administration (FEA), a predecessor agency of the Department of Energy, as Energy Action No. 12 on May 25, 1977, and became effective on June 20, 1977. Plan Amendment No. 2, which authorized expansion of the SPR to one billion barrels, was transmitted to the Congress by the DOE as Energy Action DOE No. 2 on May 18, 1978, and became effective on June 13, 1978. Plan Amendment No. 3, setting forth the method of withdrawal and distribution of the SPR oil, was transmitted to the Congress as Energy Action DOE No. 5 on October 21, 1979, and became effective on November 15, 1979.

The SPR's storage facilities are being developed and filled in three phases. Phase I involves the construction of facilities to utilize existing storage capacity of approximately 248 million barrels (MMB) at five salt dome sites located in the Gulf Coast areas of Louisiana and Texas. Phase I construction is now essentially complete. Phase II construction goals include the expansion of the storage

capacities at the Bryan Mound, Texas, and West Hackberry and Bayou Choctaw, Louisiana, sites by a total of 290 MMB. This expansion, which is still under development, will create new caverns through the process of solution mining ("leaching"). The new leached caverns will result in an additional 160 MMB of capacity at West Hackberry and an additional 120 MMB of capacity at Bryan Mound; an existing 10 MMB cavern will be acquired at Bayou Choctaw. Facilities installed at the West Hackberry and Bryan Mound sites during Phase I will be modified and used for the solution mining of the additional underground storage capacity. Phase III, which currently is unfunded, will involve development of additional storage capacity of approximately 200 MMB, although the sites to be developed have not yet been selected.

DOE began filling the SPR storage facilities in 1977. Some 91.7 MMB of crude oil now are stored at three SPR sites: West Hackberry (2.9 MMB of sweet crude oil and 27.0 MMB of sour crude oil); Bayou Choctaw (28.5 MMB of sour crude oil); and Bryan Mound (31.8 MMB of sweet crude oil). Another 1.5 MMB are in pipelines or terminals. By the end of September 1979, the SPR had an operational capability to withdraw oil from these three sites for distribution at a rate of approximately one million barrels per day (MMB/D). Upon the complete filling of the storage capacity developed in Phases I and II, the withdrawal ("drawdown") and distribution capability at the five SPR storage sites will increase to about 3.5 MMB/D.

Amendment No. 1 to the SPR Plan called for storage of 500 MMB by December 22, 1980. Oil acquisition for the SPR was suspended in 1979, however, to avoid placing excessive upward pressures on oil prices or disrupting domestic crude oil supply availability in a period of unstable world oil market conditions. Consequently, the SPR's current crude oil inventory would serve only as a limited response to a near term supply interruption.

Congressional concern that the amount of crude oil currently stored in the SPR is inadequate was recently expressed in Title VIII of the Energy Security Act (ESA), Public Law 96-294 (June 30, 1980). Section 801 of the ESA amended section 160 of the EPCA by directing the President to immediately undertake and continue crude oil acquisition, transportation, and oil injection activities at a level sufficient to assure that crude oil storage in the SPR will be increased at a minimum average rate of at least 100,000 B/D beginning in fiscal year 1981. No further amendment to the SPR Plan is necessary to implement this mandated resumption of fill of the SPR, regardless of the type or source (foreign or domestic) of oil acquired for storage. This requirement to fill the SPR will cease when the storage level reaches the amount set forth in the SPR Plan. That level, which presently is set by the terms of the SPR Plan at one billion barrels, may be changed by an amendment to the plan in accordance with the procedures of the EPCA.

B. Naval Petroleum Reserves

The Naval Petroleum Reserves (NPR) were established by executive order between 1912 and 1924. There are three Reserves which currently produce crude oil: Elk Hills and Buena Vista, both in Kern County, California, and Teapot Dome, Natrona County, Wyoming. The Elk Hills Reserve is by far the largest, with proven reserves in excess of one billion barrels of crude oil. Until 1976 the Reserves were used almost exclusively for Department of Defense activities. Production from the Reserves, with the exception of a brief period during World War II, was minimal, being limited to that necessary to test, conserve, and maintain the fields. Production was temporarily increased, pursuant to a Congressional joint resolution, to 65,000 barrels per day (B/D) for a limited period in 1944-1945 for the purpose of meeting crucial petroleum needs for our war effort.

Upon passage of the Naval Petroleum Reserves Production Act of 1976 (NPR Act), Pub. L. 94-258 (10 U.S.C. section 7420 *et seq.)*, the NPR was required to produce crude oil at the maximum efficient rate for at last six years (until April 5, 1982) at these three locations. By following this Congressional requirement, the Federal Government's share of production from the NPR has increased to approximately 132,000 B/D.

The largest portion of the NPR production, at the Elk Hills Reserve, has been sold by the Government through competitive bidding since 1976. Most of this production is currently marketed and refined on the West Coast. For the current contract period, February 1 to August 1, 1980, the Elk Hills crude oil was sold to ten "small" refiners,[1] five other refiners, and three trading companies.

It is estimated that from 99,000-132,000 B/D will be available from the NPR for filling the SPR. The variance is due to the possibility that, pursuant to the NPR Act, DOE may continue to set aside 25 percent of the Government's share of NPR production for purchase by small refiners (those without adequate sources of crude oil and whose refineries have a refining capacity of under 45,000 B/D).

C. Use of NPR Crude Oil in the Strategic Petroleum Reserve

The SPR Plan originally concluded that use of NPR oil to fill the SPR would not offer advantages over the competitive procurement of imported and domestic oil. At that time it was anticipated that sufficient crude oil for the SPR could be most efficiently obtained through competitive procurement. Today, however, considering the uncertain world crude oil market and the rapid escalation of world oil prices, the expenses and administrative complexities of utilizing the NPR oil for the SPR are less significant when compared to the current costs of competitively procuring imported crude oil. In addition, the Federal Government's share of NPR oil could now provide, in this period of uncertain and increasingly expensive crude oil supplies, an assured and continuous source of crude oil for a large portion of the SPR fill requirements.

The statutory basis for use of NPR oil for filling the SPR, either by means of direct transportation and storage or through exchange, is contained in the EPCA, as amended by the ESA, and the NPR Act, also amended by the ESA.

Section 160(a) of the EPCA as originally enacted provided in part as follows:

> The Secretary is authorized, for the purposes of implementing the Strategic Petroleum Reserve Plan * * * to place in storage, transport, or exchange (1) crude oil produced from Federal lands, including crude oil produced from the Naval Petroleum Reserves to the extent that such production is authorized by law. * * *

Section 802 of the ESA added a new subsection (d) to section 160 of the EPCA requiring that unless the SPR storage activities are maintained at an average rate of 100,000 B/D, the Government may not sell or otherwise dispose of its share of crude oil from the Elk Hills Reserve except to fill the SPR directly or by exchange for other oil, with certain specified exceptions. The exceptions are: (1) amounts of production set aside for small refiners as provided under the existing provisions of the NPR Act (10 U.S.C. 7430(d)), (2) minimal amounts necessary for reservoir protection, and (3) production for national defense requirements under the NPR Act (10 U.S.C. 7422(b)(2)),

[1] For purposes of NPR sales contracts, a "small" refiner is one which has a refining capacity of 45 000 B/D or less. Under the EPAA, however, a "small" refiner is one which has a refining capacity of 175,000 B/D or less.

limited to a period of no more than nine months. Additionally, the ESA further provides that the President would be relieved of these requirements to continue storage of oil in the SPR and to use NPR oil for purposes of SPR storage, during certain emergency situations. First, a temporary exemption from these requirements is provided in the event of a drawdown of the SPR, as permitted under section 161 of the EPCA. Second, the President is given discretion to request an exemption from the fill requirements if he finds that compliance with those requirements significantly impairs the ability of the United States to respond to a severe energy supply interruption or to meet the obligations of the United States under the International Energy Program.

Section 201(11) of the NPR Act, 10 U.S.C. 7430(k), as amended by the ESA, states the following regarding use of NPR oil in the SPR:

(k)(1) With respect to all or any part of the United States share of petroleum produced from the naval petroleum reserves, the President may direct that the Secretary—

(a) place that petroleum in the Strategic Petroleum reserve as authorized by sections 151 through 166 of the Energy Policy and Conservation Act (42 U.S.C. 6231–6246); or

(b) exchange, directly or indirectly, that petroleum for other petroleum to be placed in the Strategic Petroleum Reserve under such terms and conditions and by such methods as the Secretary determines to be appropriate, without regard to otherwise applicable Federal procurement statutes and regulations.

(2) The requirements of section 159 of the Energy Policy and Conservation Act (42 U.S.C. 6239) do not apply to actions taken under this subsection.

In light of these authorities the NPR crude oil may be used to fill the SPR in two ways: (1) direct physical transportation of the crude oil production from the NPR sites to the SPR sites, or (2) exchange of the NPR crude oil for other crude oil which would be delivered to the SPR sites.

However, the first option, the direct physical transportation of NPR oil to the SPR, is not considered viable to any substantial degree at this time. Great difficulties are involved in the direct transportation of NPR crude oil form Elk Hills, California (where more than 95% of NPR production originates) to the SPR storage facilities on the Gulf Coast. Facilities generally do not exist on the West Coast to accommodate the shipment of substantial quantities of NPR oil to docks and then by tanker to the Gulf Coast. There also is inadequate common carrier pipeline capacity to handle shipments of this oil to the Gulf Coast. The estimated maximum capacity of existing common carrier pipelines to ship from Elk Hills to the Gulf Coast is 34,000 barrels a day. Even though there are plans to expand the pipeline capacity to approximately 40,000 barrels a day, it is estimated that no more than 20,000 barrels a day of excess capacity could be available for shipment of NPR oil to the Gulf Coast, and that use of the pipeline for shipping NPR oil might require displacing other shipments.

The second option, obtaining crude oil for the SPR by exchanging NPR crude oil, therefore is the more practicable alternative. The Defense Fuel Supply Center (DFSC) of the Department of Defense is preparing, on behalf of DOE, a solicitation for competitively-conducted exchanges of NPR oil for oil be delivered to the SPR. However, because the efforts of the DFSC may not produce satisfactory offers of sufficient volumes of crude oil, we have determined that an amendment to the petroleum allocation regulations is needed to authorize DOE to provide for the exchange of NPR crude oil to assure the filling of the SPR at the optimum rate.

Statutory support for requiring refiners to deliver crude oil to the SPR in exchange for NPR crude oil is contained in the Emergency Petroleum Allocation Act of 1973 (EPAA), Pub. L. 93–159, as amended, 15 U.S.C. section 751 *et seq.* The President has the authority under the EPAA to allocate all crude oil or refined products produced in or imported into the United States, in specified amounts and at specified prices, in furtherance of the EPAA objectives. Section 4(b)(1)(F) of the EPAA states that one of the objectives of the EPAA is the "equitable distribution of crude oil, residual fuel oil, and refined petroleum products at equitable prices . . . among all users." Permitting the SPR to receive its equitable share of U.S. oil, domestic as well as imported, serves this objective.

As discussed above, the objective of the SPR is to provide for the storage of substantial quantities of petroleum in order to diminish the United States' vulnerability to the effects of a severe supply interruption. Thus, resumption of filling of the SPR clearly would further the EPAA objective of protecting public health, safety and welfare, and the national defense. See EPAA section 4(b)(1)(A).

Further, storage in the SPR of crude oil obtained by means of exchange for NPR crude oil would assure continued filling of the SPR during a period of uncertainty in the world market, while avoiding pressures on world oil prices which might result from exclusive reliance on Government purchases of crude oil for the SPR directly in the world market. Thus, such exchanges, which could mitigate any market distortions which might result from competitive bidding for NPR oil, would be consistent with the objective, recognized both in EPAA section 4(b)(1)(I) and in EPCA section 160(b)(4), of minimizing the impact of Government interference on market forces.

II. Alternative Proposed Amendments

A. Alternative Proposal No. 1: Allocation of Crude Oil for the Strategic Petroleum Reserve Through Exchange of Naval Petroleum Reserves Crude Oil or Regulated Sale

1. Refiners required to supply oil to the Strategic Petroleum Reserve
2. Determination of exchange/sale obligations
3. Methods of discharging exchange/sale obligations
4. Credit for oil supplied to the Strategic Petroleum Reserve outside the regulatory program
5. Exchange notices
6. Crude oil types required for the Strategic Petroleum Reserve

1. Refiners Required To Supply Oil to the Strategic Petroleum Reserve

This proposed amendment would establish a new section 211.68 in Part 211 to require specified refiners (termed "exchange partners") to supply crude oil suitable for storage in the SPR in exchange for NPR crude oil. As discussed in more detail below, in lieu of delivering NPR crude oil to an exchange partner, the DOE could elect to compensate an exchange partner in cash. The group of refiners to be designated as exchange partners would consist of the fifteen so-called major integrated refiners that are currently classified as refiner-sellers (as defined in § 211.62) for the Buy/Sell Program and other refiners with refining capacity in excess of 175,000 B/D (the so-called large independent refiners).

We believe this group of refiners is best suited to act as exchange partners with the United States Government to ensure that sufficient quantities of suitable crude oil are made available for filling the SPR. In contrast to small refiners, these refiners generally have access to many diverse sources of crude oil supplies and the experience in purchasing, trading and transporting large quantities of crude oil which would enable them to efficiently furnish suitable crude oil for the SPR and receive NPR crude oil in exchange. Moreover, to the extent that the proposed regulation provides for the *exchange* of approximately equal volumes of crude oil, and given the ability of these refiners to obtain crude supplies, the net crude oil supply

position of the participating refiners should not be adversely affected, as long as crude oil supply exceeds crude oil consumption. Thus, the provision would not conflict with the EPAA objective of protecting the crude oil supply and competitive viability of independent refiners. Finally, we are not proposing to include small refiners or resellers in the class of exchange partners because we believe that to expand the number of exchange partners further would affect our ability to consummate the exchange/sale transactions efficiently.

We will consider limiting the group of exchange partners to the 15 major refiners, or to only the 15 major refiners and certain large independent refiners, provided that the comments submitted during this proposed rulemaking and other information available to us demonstrate that some or all of the large independent refiners would be adversely affected if they were included as exchange partners. Comments on this issue might include data regarding such refiners' relative access to foreign and domestic crude oil supplies, ability to refine or exchange NPR oil, or sufficiency of access to pipelines, tankers, or other modes of transportation for the purpose of delivering crude oil to the SPR facilities.

2. Determination of Exchange/Sale Obligations

We are proposing that each exchange partner's exchange/sale obligation would be equal to its proportionate share of all designated exchange partners' total runs to stills during the period August 1979 through July 1980. This base period should be of sufficient duration to eliminate any short-term aberrations in the runs to stills data, and yet recent enough to provide an accurate indication of present relative access to crude oil supplies and, thus, ability to enter into exchange transactions. We will consider alternative methods of calculating exchange partners' exchange/sale obligations, including the use of a different fixed base period or a 12-month rolling base period. Comments are requested as to whether any of these alternative proposed methods of prorating exchange/sale obligations among the designated exchange partners would be preferable.

3. Methods for Discharging Exchange/Sale Obligations

The proposed regulation specifies several methods by which the exchange partners could be required, at the option of DOE, to discharge their exchange/sale obligations. These methods include a voluntary or mandatory exchange of NPR crude oil,[1] and a mandatory sale. One or more of these methods could be selected by DOE for any exchange period. Each Exchange Notice would specify which method or methods DOE had selected to impose for that exchange period.

a. *Voluntary Exchange Offers*

One method for discharging obligations that DOE could elect for any exchange period would provide a period during which voluntary exchange offers would be entertained by DOE. The Exchange Notice for that period would specify that for the 15 days following publication of the Notice, any of the refiners designated in the Notice as exchange partners could submit an exchange offer to DOE. Such an offer would, at a minimum, specify the type or types of crude oil offered to the SPR, the respective volumes of each type of crude oil offered, a proposed delivery schedule, and a ratio for determining the volume of NPR oil that the offeror would be given in exchange. DOE could accept any such exchange offer during the 30 days following the publication of the Exchange Notice. If an exchange offer were accepted by DOE, and a contract were executed, the exchange partner would be considered as having discharged its exchange/sale obligation for that exchange period to the extent of the volume of oil actually delivered to the SPR.[2]

In the event voluntary exchange offers are permitted for an exchange period, but such offers do not result in DOE acceptances of crude oil of sufficient quality or quantity, then each exchange partner would be given notice to that effect, and the mandatory exchange or sale provisions of the proposed regulation, as discussed below, would apply.

b. *Mandatory Exchange or Sale*

If voluntary exchange offers are not permitted for any exchange period, or if such offers result in insufficient exchanges, then each exchange partner would be required to deliver to the SPR the quantity of crude oil equal to its exchange/sale obligation for that period. In exchange for crude oil delivered to the SPR, each exchange partner would receive a volume of NPR crude oil determined by the ratio provided in the allocation regulations.

Due to potential logistical problems during some exchange periods, including temporary pipeline space limitations and inadequate access to dock and terminal facilities, it may not always be practicable for all exchange partners to deliver their exchange/sale obligations in a timely fashion, especially since some exchange partner's obligations may be quite small. Moreover, if competitive exchange or sale transactions are successful in acquiring a large volume of oil for the SPR, the additional volume of oil needed for the SPR through mandatory exchange or sale transactions, when divided among the remaining exchange partners, may be so small as to make it infeasible to accept separate deliveries. Therefore, we are proposing alternative authority for DOE to direct certain exchange partners to deliver suitable crude oil in specified quantities, whether such quantities would be equal to or more or less than the exchange partner's exchange/sale obligation for that period. In directing a particular exchange partner to deliver oil to the SPR, DOE would consider which exchange partner or partners would be best able to consummate delivery of the type of oil needed. In the event a particular exchange partner were directed to deliver a quantity of oil to the SPR in any exchange period in excess of its exchange/sale obligation for that period, the exchange partner would receive a credit in that amount against its exchange/sale obligation for the next exchange period. Conversely, if an exchange partner were not directed to deliver oil to the SPR in an exchange period, its unsatisfied obligation would be added to its obligation for the next exchange period. As an alternative to carrying forward such debits and credits into succeeding exchange periods, we are proposing that the regulation should simply require exchange partners that were not directed to deliver oil to the SPR during an exchange period to reimburse the exchange partners that delivered oil to the SPR by sales or trades of crude oil in the volumes owed by the non-delivery exchange partner.

As an alternative to exchanging NPR oil, we are also proposing that DOE could elect to compensate an exchange

[1] The volume of NPR crude oil available for regulated exchange (whether voluntary or mandatory) during an exchange period should be equal to the volume of the Federal Government's share of NPR production for the period, reduced by the volume (if any) of crude oil set aside for small refiners for that period, and further reduced by the volume of NPR crude oil previously committed to exchanges negotiated for that period as a result of DFSC solicitations.

[2] Moreover, so as to assure there is no disincentive for refiners to enter into exchanges or sales pursuant to the forthcoming DFSC solicitation, we are proposing with respect to each of the alternatives under consideration that refiners that have entered into exchanges or sales for delivery of oil to the SPR other than pursuant to the proposed rule shall be considered to have discharged any obligation under a regulation adopted in this proceeding to the extent of the volume of oil actually delivered to the SPR.

partner by making a cash payment for the oil delivered to the SPR equal to the weighted average landed cost of the exchange partner's crude oil imports in the month of delivery.[3] Due to the two-month delay in the reporting of crude oil costs to ERA, such cost would have to be estimated at the time of the exchange and adjusted to the actual cost in the second month following the month of delivery. We specifically request comments on, and would adopt if supported by the record, alternative methods for establishing the compensation in a regulated sale. For example, would it be appropriate to provide that the compensation would be equal to the weighted average landed cost of *all* exchange partner's crude oil imports during the exchange period, or the weighted average delivered cost to all refiners of uncontrolled *domestic* crude oil during the exchange period? Under each of these alternatives, should the period for establishing the compensation be the entire exchange period or only the month in which the transaction occurs? Finally, should the Government pay the actual cost of the crude oil delivered to the SPR?

Under any of these options, any exchange partner would be allowed to trade its exchange/sale obligations with any firm (including a non-exchange partner) prior to the beginning of or during the exchange period with the approval of DOE. However, the proposed regulation provides that such transactions would not relieve the exchange partner of its obligation in the event the other firm fails to perform.

It is anticipated that at times additional minor adjustments might be necessary to equalize a particular exchange transaction. For example, under a mandatory exchange the exchange ratio might be based partially on estimated costs or values, with appropriate adjustment to reflect actual costs or values not able to be made until after deliveries have been completed. In such cases, we are proposing that DOE could make such adjustments by means of a cash payment to the exchange partner or by directing the exchange partner to make a cash payment to DOE, if DOE determines that it is impracticable to make such adjustments by delivering or receiving additional quantities of crude oil.

4. Credit for Oil Supplied to the SPR Outside the Regulatory Program

We also are proposing that any exchange partner that delivers oil to the SPR after July 1, 1980, in a sale or exchange, other than pursuant to this rule would receive a barrel-for-barrel credit against any exchange/sale obligation it might have under the regulatory program proposed in this notice. If a delivery takes place before the first exchange period begins, the credit would be applied first against the exchange/sale obligation of that first exchange period. If a delivery takes place during an exchange period, then the credit would be applied first against the exchange/sale obligation of that exchange period. In either case, any unused credit would be applied to the succeeding exchange period(s).

5. Exchange Notices

In general, the proposed regulation provides that DOE may issue periodic Exchange Notices requiring the refiners described above to deliver crude oil to the SPR. An Exchange Notice would be published in the Federal Register at least 20 days prior to the beginning of the exchange period and would remain in effect until the end of the exchange period, unless amended by the publication of a Supplemental Exchange Notice. The Exchange Notice would specify the quality and total quantity of crude oil to be delivered to the SPR storage sites during the "exchange period," the exchange ratio for the NPR crude oil, special terms and conditions applicable to the exchange transactions, the "exchange/sale obligation" of each exchange partner, and the method or methods by which the exchange/sale obligations must be discharged.

The proposed regulation contemplates an exchange period of six months. We specifically request comments, however, as to whether the exchange period should be longer or shorter. If the comments submitted during this rulemaking and other information available to us indicate that the exchange period should be of a different duration, then we will adopt such a period in the final rule.

To facilitate the scheduling of crude oil deliveries to the SPR under a mandatory exchange, we are proposing that each exchange partner that is required to deliver oil to the SPR submit a proposed delivery schedule no later than 15 days after publication of the Exchange Notice. If, however, DOE will be entertaining voluntary exchange offers for an exchange period, then the proposed delivery schedule need not be submitted to DOE until 15 days after DOE has notified the exchange partners that the voluntary exchanges will be insufficient for the SPR's needs and that mandatory exchange or sale transactions will be required. Comments are specifically requested as to whether a 15-day period is sufficient to prepare and submit a proposed delivery schedule. The proposed delivery schedule would list, for each proposed delivery date, the types of oil to be delivered, the relative volumes of each oil type, and the preferred DOE terminal[4] be preferred for delivery. DOE will consider submissions of proposed delivery schedules on a "first-come, first-served" basis. All ship nomination and acceptance procedures must be in accordance with then-current port manuals of the SPR receiving terminals. Exchange partners will be notified by DOE within five days of DOE's receipt of their proposed schedules, whether the proposed schedules have been accepted or rejected in whole or in part. If a proposed schedule is unacceptable, in whole or in part, whether because of prior commitments for the date selected or because of other incompatibilities, DOE will explain the reasons for the rejection, and in some cases, will also suggest alternative dates, volumes, and/or types of oil for delivery.

[3] The maximum volume of NPR oil that would be available for exchange in any allocation period would be 132,000 B/D. However, in order to fulfill the mandate of the recently-enacted ESA, or to achieve other policy objectives, the SPR fill requirements may exceed the volume of NPR oil available for exchanges. Thus, to the extent that the Government is not able to purchase this excess volume of oil in competitive procurement, the volume of crude allocated to the SPR would exceed the volume of NPR oil available for exchanges, and the Government would compensate refiners for these additional volumes in cash.

[4] DOE currently has access to three marine terminals for purposes of receiving tanker deliveries for the SPR. The locations, types of oils accepted, and specifications are as follows:

Tanker discharge terminals	Terminal storage (MBbl)	Draft (ft)	LOA (ft)	Beam (ft)	Maximum (Dwt)
Sunoco Terminals, Inc., Nederland, Tex. (Type I—Sour) (Type II Through V—Sweet)	1,200	39½ [1] 136	1,000	144	130,000
Seaway Terminal, Freeport, Tex. (Type II through V—Sweet)	800	37	750	107	[2] 63,000
DOE Terminal, St. James, La. (Type I—Sour)	1,600	[3] [4] 41 [1] 153	940	[5]	100,000

[1] Airdraft.
[2] Terminal permission required for less than 32M Dwt; maximum at Dock No. 1 is 50,000 Dwt.
[3] Fresh.
[4] Subject to possible further draft limitation at Mississippi River entrance, which is dependent on flood and silting conditions.

When DOE has notified the exchange partner that its proposed delivery schedule is acceptable, the exchange partner will become obligated to make delivery as set forth in that schedule. Timely delivery will be within a five-day "window"; that is, delivery taking place as much as two days before or two days after the date specified in the delivery schedule will be considered timely.

Every ninety days an accounting will be made to ensure that each exchange partner has not received a volume of NPR crude oil in excess of that volume (as adjusted by the exchange ratio) of oil which it has delivered to the SPR. Each exchange partner will have the responsibility of coordinating its deliveries of oil to the SPR with its receipts of NPR oil to achieve a balance at least every ninety days.

6. Crude Oil Types Required for the SPR

We anticipate that one or more of five different types of crude oil would be required for delivery to the SPR. These types, and their gravity and sulfur characteristics, are as follows:

Type	API Gravity (°API)	Total Sulfur (wt. %) Max.
I	30-36	1.99
II	40-45	.25
III	30-36	.50
IV	34-40	.25
V	36-41	.50

A sixth type, with a gravity in the range of 26-30 °API and with a maximum acceptable sulfur content of 1.25%, currently is not expected to be required. The only crude oil currently meeting the specifications of the sixth type is Alaska North Slope crude oil. Comments are invited, however, as to what quantities, if any, of Alaska North Slope crude oil might be offered for delivery to the SPR. The actual types and relative volumes of each type of crude oil to be delivered to the SPR, as well as the storage sites to which the oil is to be delivered, would be announced for each exchange period in the Exchange Notice for that period.

Because we anticipate that the value of the NPR oil will not always be the same as the value of the oil delivered to the SPR in exchange, an exact barrel-for-barrel exchange will not always be possible. Therefore, we are proposing alternative exchange ratios to be used to determine the volume of NPR crude oil which will be deemed equivalent in value to one barrel of each type of crude oil delivered to the SPR. A discussion of proposed alternative exchange ratios is set forth below.

B. Alternative Proposal No. 2: Adding the Strategic Petroleum Reserve As A Buyer to the Crude Oil Buy/Sell List

Under this alternative proposal, we would amend the definition of refiner-buyer in section 211.62 and add a new paragraph to the current Buy/Sell Program regulations set forth in section 211.65 to provide that the Strategic Petroleum Reserve would be added to the Buy/Sell List as an eligible buyer of allocated crude oil for storage in the SPR. The total sales obligation of the refiner-sellers for each six-month allocation period would be increased by the volume of crude oil allocated on the Buy/Sell List for the SPR. Thus, each refiner-seller's sales obligation under the Program would consist of a portion of the total "purchase opportunity" of the SPR. A refiner-seller could satisfy its sales obligation by selling oil to the SPR, to small refiners, or to both. A refiner-seller delivering oil to the SPR could be compensated in cash, as compensation is currently provided for under the Buy/Sell Program regulations, or alternatively, by delivery of NPR crude oil in exchange.

As is the case currently under the Buy/Sell Program regulations, DOE (as a "buyer") would negotiate with refiner-sellers during the twenty-day period following publication of the Buy/Sell Notice. As a result of such negotiations, DOE might obtain part or all of its allocation for that period, and would compensate the refiner-seller in cash or in NPR oil. If, however, at the end of that 20-day period DOE had not negotiated crude oil purchases or exchanges sufficient to satisfy its total allocation, then DOE could direct a refiner-seller to deliver oil to the SPR under § 211.65(j)(3) of the current Buy/Sell Program regulations. In such a directed transaction, any refiner-seller not compensated in cash in accordance with the current Buy/Sell price rule would be compensated by a delivery of NPR crude oil in a volume determined in accordance with the exchange ratio proposed in this rulemaking.

Under the amendments being proposed, the Buy/Sell Notice would include, in addition to the items currently published in the Notice, several new provisions relating to the SPR. The Buy/Sell Notice would specify the relative volumes of the SPR's total allocation for which compensation would be made in cash and in kind (by delivery of NPR crude oil). The Notice would also specify the exchange ratio for the NPR crude oil applicable to directed deliveries, special terms and conditions applicable to the exchange transactions, and the types and relative quantities of crude oil required for the SPR.

The different types of crude oil expected to be required for the SPR and the proposed alternative ratios to be used in exchanges of NPR crude oil are discussed in Parts II-A(6) and II-C, respectively.

For the reasons discussed under the first alternative proposal, we are also proposing under this alternative that any refiner-seller that delivers crude oil to the SPR after July 1, 1980, in a sale or exchange, other than pursuant to this rule, will receive a barrel-for-barrel credit against its total allocation obligation for the applicable allocation period in which crude oil is allocated to the SPR.

C. Exchange Ratio for NPR Crude Oil

The alternative proposals contemplate exchange transactions involving the exchange of NPR crude oil for other crude oil delivered to the SPR. As previously mentioned, we anticipate that the quality, and hence the value, of the oils exchanged will not always be equal. Therefore, we are proposing three alternative methods of calculating the exchange ratio for determining the number of barrels of a given type of NPR crude oil the Government would deliver to a refiner in exchange for each barrel of a given type of crude oil delivered to the SPR.

The first alternative method proposed would define the exchange ratio in terms of refiners' actual acquisition costs for crude oil that is similar in quality to the crude oils being exchanged. The numerator of the ratio under this proposed method would be the estimated weighted average delivered cost to all refiners in the month of the exchange of all generic imported and uncontrolled domestic crude oils that meet the specifications of the type of oil being delivered to the SPR. We request comments on whether we should use the estimated average delivered cost of such crude oils to the refiner who is supplying the oil for the SPR rather than the cost to all refiners. In either case, the ratio would be adjusted before the end of the second month following the month of the exchange to reflect any differences

between the actual and the estimated costs.

We request comments on whether we should adopt the average landed cost of crude oil in the Gulf Coast to determine the numerator of the exchange ratio. One concern we have is with the effect of transportation costs on the accuracy of the exchange ratio. Average landed costs in the Gulf Coast might be the most accurate estimate of the cost to refiners of oil delivered to the SPR. On the other hand, this information is not currently collected by DOE. We request comments on the availability of such data and how important transportation costs are.

The denominator of the ratio would be the average of the two highest posted prices for uncontrolled crude oil similar to the NPR oil being exchanged. No posted price would be used in computing the average unless an actual purchase had been consummated at that price. The prices used would be those in effect at the time the NPR oil is to be delivered to the exchange partner. However, if subsequent to the delivery of the NPR oil a price is posted having a retroactive effect to the date of delivery, and if that price would be one of the two highest posted prices, then that price would be used in the computation of the ratio and appropriate adjustments would be made. For the Elk Hills and Buena Vista oil, DOE would designate at least three fields in which oil of like quality is produced, and then compute an average of the two highest posted prices in each of these fields. For the Teapot Dome oil, DOE would compute an average of the two highest posted prices produced in the State of Wyoming. This distinction is proposed due to the fact that comparable postings are more numerous for Elk Hills and Buena Vista oil than for Teapot Dome oil.

The second alternative method proposed would basically result in barrel-for-barrel exchanges of NPR oil for oil delivered to the SPR, with certain adjustments for quality (based on sulfur and gravity differences). Generally speaking, sulfur and gravity are indicative of crude oil worth and value. Therefore, we are proposing under this alternative that adjustments be made for differences in sulfur and gravity between the NPR crude oil and the crude delivered to the SPR. We are proposing that differentials of $0.05 per barrel per 0.1 (one-tenth) degree API gravity and $0.10 per barrel per 0.1 (one-tenth) percent sulfur be established as adjustment factors. Comments are specifically requested as to whether the differentials proposed here properly account for quality differences in crude oils. We will consider adopting other differentials, including formulas for computing differentials, and will consider permitting differential factors to be negotiated between the Government and exchange partners.

Comments are also requested as to whether we should adjust the barrel-for-barrel exchanges for differences in transportation or location of the NPR crude oil and the crude oil delivered to the SPR. We will consider adopting transportation and location adjustment factors, if supported by the record.

Under this proposal, the Government could elect to effect sulfur and gravity differential adjustments by transfer of crude oil instead of by cash payments. If the Government elects to deliver additional crude oil to an exchange partner to account for higher quality crude oil delivered to the SPR (lower sulfur or higher API gravity), in lieu of a cash payment, the quantity of the additional delivery would be based upon the total value of the differential adjustments for sulfur and gravity, divided by the value of NPR crude oil. We are proposing that the value of NPR crude oil be based upon the average of the two highest posted prices for uncontrolled crude oil similar to the NPR oil being exchanged, as described in alternative 1 above.

If the Government elects to accept additional crude oil from an exchange partner to account for lower quality crude oil delivered to the SPR (higher sulfur or lower API gravity), in lieu of a cash payment, the quantity of the additional crude oil will be based upon the total value of the differential adjustments for sulfur and gravity, divided by the value of the crude oil delivered to the SPR. We are proposing that the value of the crude delivered to the SPR be calculated according to one of the methods described in alternative 1 above, with respect to the numerator of the exchange ratio.

We request comments on the advisability of using other values for the NPR crude oil or crude oil delivered to the SPR in the formulas for computing additional quantities to be transferred to account for quality differentials. We will consider adopting in the final rule alternative methods for computing these values or for computing the additional quantities involved.

The third alternative method proposed would define the exchange ratio in terms of relative crude oil values imputed from refinery product yield and wholesale product price data in a given base period. The numerator of the ratio would be the imputed value of the crude oil type being delivered to the SPR. This value would be computed by multiplying the average yield of various products (naphtha, distillate, gas oil, and residuum) from that crude type, expressed as a volumetric percentage, times the average wholesale price for each product. The denominator of the ratio would be the imputed value of the NPR crude oil type being exchanged. This value would be computed in the same manner as the value of the crude oil delivered to the SPR. Under this alternative, we propose using a rolling base period for determining the yield and price data. The base period would be the month in the previous year corresponding to the month of delivery. However, we will consider adopting in the final rule a fixed base period or a provision for periodically changing the base period.

III. Proposed Special Temporary Relief for Refiners Dependent Upon NPR Crude Oil

If most of the NPR crude oil from the Elk Hills Reserve is exchanged for purposes of acquiring oil for the SPR, certain small refiners located in California might experience a supply loss which they might not be able to replace. Our preliminary review of runs to stills data reported under the Entitlements Program indicates that approximately 50 percent of NPR production in 1978 and 1979 was processed by single-refinery small refiners located in the Elk Hills vicinity. These data further indicate that NPR oil constituted approximately 30 percent of these small refiners' runs to stills during 1978 and 1979.

This Entitlements Program data, however, does not provide a completely accurate picture of these small refiners' dependence on NPR oil. Because of a provision in the Entitlements Program regulations (10 CFR section 211.67(g)), applicable to exchanges involving domestic crude oil, generally speaking, a refiner is deemed to retain any domestic crude oil given up in exchange. For example, if a refiner purchased NPR crude oil but traded it to another refiner for imported crude oil, the original owner of the NPR oil would report it for the purposes of the Entitlements Program, even though the second refiner actually ran the imported crude oil received in the trade. Therefore, we are unable to determine exactly how much NPR crude oil has been physically run in these small refiner refineries. In addition, we do not know the extent to which these small refiners might have access to crude oil supplies other than the NPR crude oil.

However, on the basis of the available data, we have tentatively concluded that

it would be appropriate to provide temporary relief through the Buy/Sell Program to these firms that incur a supply loss due to the withdrawal by the Government of NPR oil from the market. Accordingly, we are proposing to add a new subparagraph (c)(2)(iv) to the Buy/Sell Program regulations in section 211.65, which provides for allocations to any small refiner which is able to demonstrate that: (1) its refinery has processed an amount of NPR crude oil in excess of five percent of that refinery's runs to stills during the preceding allocation period; (2) its refinery has incurred or will incur at least a fifty percent loss of its supply of such crude oil due to the Government's crude oil acquisition program for the SPR; (3) it has exhausted any opportunity to obtain NPR crude oil under the NPR Act small refiner set-aside for the period for which an allocation is sought; (4) its refinery cannot reasonably be expected to replace its lost supplies of NPR oil; and (5) its projected runs to stills for its refinery will be less than ERA's estimate of the national utilization rate for all refiners.

We specifically request detailed comments that provide evidence of special hardship, if any, that would arise in the event most NPR oil is exchanged to acquire oil for the SPR. If we are not convinced of the need for special relief, firmly supported by detailed evidence of dependence on NPR oil and lack of access to other crude oil supplies, then we will not adopt in our final rule the proposed provision for temporary relief.

IV. The Entitlements Program

In the SPR Plan, the Federal Energy Administration (FEA), a predecessor agency of DOE, stated its intention to allow the Federal Government to obtain the entitlements benefits for using imported crude oil to fill the SPR to the same extent that refiners receive such benefits for processing imported crude oil. Accordingly, FEA amended its regulations under the EPAA to provide that suppliers of imported crude oil to the SPR would be paid partly in entitlements, thus reducing the Government's cost for the imported crude oil stored in the SPR to the weighted average cost of all crude oil to refiners. *See* 42 FR 21761 (April 29, 1977).

Section 805 of the ESA discussed above directs the President to amend the Entitlements Program regulations, no later than August 29, 1980, so as effectively to allocate lower tier crude oil to the Government for purposes of acquiring oil to store in the SPR. We will soon issue a final rule amending the Entitlements Program to implement these provisions of the ESA.

V. Request for Additional Comments

A. Delivery of Naval Petroleum Reserves Crude Oil To Participating Refiners

Under either of the alternative proposals, the Government would have to apportion in some manner deliveries of the NPR production among those refiners participating in exchange transactions. Such an apportionment could take the form of a daily delivery of NPR oil to each participating firm. It might be operationally more practicable, however, to plan the apportionment over a longer period of time so that all or a major part of NPR production in a given day or period of days would be delivered to a single participating firm or a small number of firms.

We anticipate that refiners participating in exchanges with the Government for NPR oil would be permitted to exchange, trade or sell any NPR crude oil that it receives in an exchange. In the case of such third party transactions it may be most practicable for the Government to deliver the NPR oil directly to the third party rather than to the participating refiner. It is expected, however, that before delivery to such third party could be effected, the Director, Naval Petroleum Reserves in California, would have to receive notice from the participating refiner of the specifics of the transaction at least ten days before the date of delivery.

Comments are specifically invited on the manner in which NPR crude oil should be distributed among the participating refiners, special features which the Government should implement to facilitate delivery of NPR oil to refiners participating in exchanges and, in particular, procedures to facilitate exchanges between refiners participating in exchanges governed by the regulations proposed in this rulemaking and other firms.

B. Legal Issues

Potentially affected refiners are invited to comment on any legal issues or problems they foresee in the proposal. Such comments should be clearly labelled as comments on legal matters and separable from other comments so as to expedite their review by the Office of General Counsel.

VI. Written Comment and Public Hearing Procedures

A. Written Comments

You are invited to participate in this proceeding by submitting data, views or arguments with respect to the proposals set forth in this notice of proposed rulemaking. Written comments should be submitted by 4:30 p.m., September 5, 1980, to the address indicated in the "Addresses" section of this notice and should be identified on the outside envelope and on the document with the docket number and the designation, "Allocation of Crude Oil for the SPR." Fifteen copies should be submitted. All comments received will be available for public inspection in the DOE Freedom of Information Reading Room, 5B-138, Forrestal Building, 1000 Independence Avenue, S.W., between the hours of 8:00 a.m. and 4:30 p.m., Monday through Friday.

Any information or data submitted which you consider to be confidential must be so identified and submitted in writing, one copy only. We reserve the right to determine the confidential status of such information or data and to treat it according to our determination.

B. Public Hearings

1. *Procedure for Request to Make Oral Presentation.* The dates and places for the hearings are indicated in the "Dates" and "Addresses" sections of this preamble. All hearings will convene at 9:30 a.m. If necessary to present all testimony, a hearing will be continued to 9:30 a.m. of the next business day following the first day of the hearing.

If you have any interest in the proposals in this notice, or represent a group or class of persons that has an interest, you may make a written request for an opportunity to make oral presentation at a hearing by 4:30 p.m. on the dates indicated in the "Dates" section of this preamble, and to the addresses indicated in the "Addresses" section of this preamble. You should be prepared to describe the interest concerned; if appropriate, to state why you are a proper representative of a group or class of persons that has such an interest; and to give a concise summary of the proposed oral presentation. You should also provide a phone number where you may be contacted through the day before the hearing.

If you are selected to be heard, you will be so notified before 4:30 p.m. on August 22, 1980, for the Los Angeles hearing, and before September 1, 1980, for the Washington, D.C. hearing. You will be required to bring one hundred copies of your statement to the address indicated in the "Addresses" section of this preamble for requests to speak at the hearing concerned before 4:30 p.m., August 26, 1980, for the Los Angeles hearing, and September 3, 1980, for the Washington, D.C. hearing.

2. *Conduct of the Hearings.* We reserve the right to select the persons to be heard at the hearings, to schedule

their respective presentations, and to establish the procedures governing the conduct of the hearings. The length of each presentation may be limited, based on the number of persons requesting to be heard.

An ERA official will be designated to preside at each of the hearings. They will not be judicial or evidentiary-type hearings. Questions may be asked only by those conducting the hearing, and there will be no cross-examination of persons presenting statements. At the conclusion of all initial oral statements, each person who has made an oral statement will be given the opportunity to make a rebuttal statement. The rebuttal statements will be given in the order in which the initial statements were made and will be subject to time limitations.

You may submit questions to be asked of any person making a statement at a hearing to the address indicated above for requests to speak at that hearing before 4:30 p.m. on the day before the hearing. If you wish to ask a question at a hearing, you may submit the question, in writing, to the presiding officer. The ERA or, if the question is submitted at a hearing, the presiding officer will determine whether the question is relevant, and whether the time limitations permit it to be presented for answer.

Any further procedural rules needed for the proper conduct of a hearing will be announced by the presiding officer.

Transcripts of the hearings will be made and the entire record of each of the hearings, including the transcripts, will be retained by the ERA and made available for inspection at the DOE Freedom of Information Reading Room, Room 5B-138, Forrestal Building, 1000 Independence Avenue, S.W., Washington, D.C., between the hours of 8:00 a.m. and 4:30 p.m., Monday through Friday. You may purchase a copy of the transcript of a hearing from the reporter.

VI. Procedural Requirements

A. Section 404 of the DOE Act

Pursuant to the requirements of Section 404(a) of the Department of Energy Organization Act (DOE Act, 42 U.S.C. 7101 *et seq.*, Pub. L. 95-91, as amended), we are referring this rule to the Federal Energy Regulatory Commisison (FERC) for a determination as to whether the proposed rule would significantly affect any matter within the Commission's jurisdiction. The Commission has until the close of the public comment period to make that determination.

B. Section 7 of the FEA Act

Under section 7(a) of the Federal Energy Administration Act of 1974 (15 U.S.C. 787 *et seq.*, Pub. L. 93-275, as amended), the requirements of which remain in effect under section 501(a) of the DOE Act, the delegate of the Secretary of Energy shall, before promulgating proposed rules, regulations, or policies affecting the quality of the environment, provide a period of not less than five working days during which the administrator of the Environmental Protection Agency (EPA) may provide written comments concerning the impact of such rules, regulations, or policies on the quality of the environment. Such comments shall be published together with publication of notice of the proposed action.

A copy of this notice was sent to the EPA that he does not foresee the proposed rule as having unfavorable impacts on the quality of the environment beyond those addressed in the Environmental Impact Statements prepared to date on the SPR. The EPA Administrator has reserve the right to make additional comments in accordance with the EPA's duties and responsibilities under section 309 of the Clean Air Act.

C. National Environmental Policy Act

On June 6, 1980, the Assistant Secrtary for Environment determined after consultation with the Office of General Counsel that today's proposals if adopted would not significantly affect the quality of the human environment within the meaning of the National Environmental Policy Act (NEPA, 42 U.S.C. 4321 *et. seq.*)

D. Executive Order 12044

Executive Order 12044 "Improving Government Regulaitons" (43 FR 12661, March 24, 1978) requires agencies subject to it to publish all proposed "significant" regulations for public comment for a minimum of 60 days. In section 2(c), the ORder recognizes that there are some instances where an agency may appropriately determine that it is necessary to provide for a shorter time period. In accordance with paragraph 12 of DOE's implementing procedures, DOE Order 2030.1 "Procedures for the Development and Analysis of Regulations, Standards, and Guidelines" (44 FR 1032, January 3, 1979), the 60-day comment period has been waived by the Secretary in light of the following public interest considerations and short-term statutory deadline.

As previously discussed in this preamble, the objective of the SPR is to provide for the storage of substantial quantities of petroleum in order to diminish the United States' vulnerability to the effects of a severe supply interruption, including the danger to national security and the Nation's freedom of action in world affairs. Acquisition of crude oil for storage in the SPR clearly must be resumed in order to fulfill this objective. Moreover, Congress has recently mandated in the Energy Security Act that crude oil acquisition for the SPR be immediately resumed so that oil is stored in the SPR at a rate of at least 100,000 B/D by October 1, 1980. Considering the uncertain world oil market and the rapid escalation of world oil prices, the use of NPR oil to acquire oil for the SPR appears to be the most practicable and expeditious method of achieving the SPR objective and meeting the statutory deadline, while at the same time avoiding undue pressures on the world oil market. Inasmuch as competitively-conducted exchanges of NPR oil for oil to be delivered to the SPR may not produce satisfactory offers of sufficient volumes of oil, an amendment to the petroleum allocation regulations is needed to provide DOE with the requisite authority to require such exchanges.

Since it is in the public interest to resume the filling of the SPR at the earliest possible time and Congress has directed that a storage rate of 100,000 B/D be achieved by October 1, 1980, the Secretary has determined that adherence to the normal 60-day public comment period would result in unacceptable days in acquisition of oil for the SPR. We are, however, providing for a 30-day period for public comment, which period is consistent with the minimum public comment period required by section 501(b) of the DOE Act.

The Executive Order also requires that a regulatory analysis be prepared for all significant regulations which are likely to have a major impact. For the reasons supporting the waiver of the 60-day comment period, the Secretary has waived the requirement for a regulatory analysis.

(Emergency Petroleum Allocation Act of 1973, 15 U.S.C. § 751 *et seq.*, Pub. L. 93-159, as amended, Pub. L. 93-511, Pub. L. 94-99, Pub. L. 94-133, Pub. L. 94-163, and Pub. L. 94-385; Federal Energy aDministration Act of 1974, 15 U.S.C. § 787 *et seq.*, Pub. L. 93-275, as amended, Pub. L. 94-332, Pub. L. 94-385, Pub. L. 95-70, and Pub. L. 95-91; Energy Policy and Conservation Act, 42 U.S.C. § 6201 *et seq.*, Pub. L. 94-163, as amended, Pub. L. 94-385, and Pub. L. 95-70, Pub. L. 95-619, and Pub. L. 96-30; Department of Energy Organization Act, 42 U.S.C. § 7101 *et seq.*, Pub. L. 95-91, Pub. L. 95-509, Pub. L. 95-619, Pub. L. 95-620,

and Pub. L. 95-621; E.O. 11790, 39 FR 23185; E.O. 12009, 42 FR 46267)

In consideration of the foregoing, Part 211 of Chapter II, Title 10 of the Code of Federal REgulations, is proposed to be amended as set forth below.

Issued in Washington, D.C., August 8, 1980.

Hazel R. Rollins,

Administrator, Economic Regulatory Administration.

Alternative Proposal No. 1: Acquisition of Crude Oil for the Strategic Petroleum Reserve By Exchange of Naval Petroleum Reserves Crude Oil and Other Means.

§ 211.62 [Amended]

1. Section 211.62 is amended by adding the definitions of "Naval Petroleum Reserves (NPR)" and "NPR crude oil" in proper alphabetical order to read as follows:

* * * * *

"Naval Petroleum Reserves (NPR)" means Naval Petroleum Reserve Number 1 (Elk Hills), located in Kern County, California, established by Executive Order of the President, dated September 2, 1912; Naval Petroleum Reserve Number 2 (Buena Vista), located in Kern County, California, established by Executive Order of the President, dated December 13, 1912; Naval Petroleum Reserve Number 3 (Teapot Dome), located in Natrona County, Wyoming, established by Executive Order of the President, dated April 30, 1915.

"NPR crude oil" means crude oil produced from the Naval Petroleum Reserves.

* * * * *

2. Part 211 is amended by adding a new section 211.68 to read as follows:

§ 211.68 Allocation of Crude Oil for the Strategic Petroleum Reserve Through Exchange of NPR crude oil and other means.

(a) *Definitions.* For purposes of this section, the following definitions apply:

"Exchange partner" means any refiner that is a refinerseller as defined in § 211.62 of this chapter and any other refiner that is not a small refiner as defined in § 211.62 of this chapter.

"Exchange period" means a consecutive six-month calendar period. The first exchange period shall be established by DOE in the first exchange notice.

(b) *Required delivery of crude oil to the Strategic Petroleum Reserve.* For the purpose of meeting the storage needs of the Strategic Petroleum Reserve, DOE may direct one or more exchange partners to deliver to the Strategic Petroleum Reserve crude oil of one or more suitable types in quantities determined in accordance with paragraph (e) of this section, in exchange for NPR crude oil, *Provided, however,* That in lieu of delivering NPR crude oil to the exchange partner, DOE may compensate any such partner in cash in accordance with paragraph (c)(2)(iii) of this section.

(c) *Discharge of exchange/sale obligations.* The DOE may specify in the Exchange Notice one or more of the methods set forth in paragraphs (c)(1) and (c)(2) of this section for discharging exchange/sale obligations for each exchange period:

(1) *Voluntary exchange offers.*—(i) *Submission of exchange offers.* If so stated in the Exchange Notice for any exchange period, during the 15 days following the publication of the Exchange Notice any exchange partner may submit an exchange offer to DOE. Such an exchange offer shall specify the type or types of crude oil offered to be delivered to the Strategic Petroleum Reserve, the respective volumes of each type of crude oil offered, the week or weeks during which such crude oil is offerd to be delivered, the terminal or terminals of the Strategic Petroleum Reserve to which such crude oil is to be delivered, and the ratio for determining the volume of NPR crude oil that the offeror would receive in exchange.

(ii) *Acceptance of exchange offers.* At any time during the 30 days following the publication of the Exchange Notice, DOE may accept any voluntary exchange offer submitted in accordance with paragraph (c)(1)(i) of this section. The exchange/sale obligation of any exchange partner whose offer is accepted by DOE shall be reduced to the extent of the volume of oil actually delivered to the Strategic Petroleum Reserve pursuant to such offer.

(iii) *Voluntary exchanges insufficient.* In the event voluntary exchange offers of crude oil of sufficient quality and quantity are not accepted for any exchange period, then DOE shall so notify the exchange partners and the exchange/sale obligations shall be discharged in accordance with paragraph (c)(2) of this section.

(2) *Mandatory exchange or sale.*—(i) *Delivery of oil to the Strategic Petroleum Reserve.* Each exchange partner shall deliver to the Strategic Petroleum Reserve the quantity of crude oil equal to its exchange/sale obligation for that period; *Provided, however,* That DOE may direct certain exchange partners to deliver suitable crude oil to the Strategic Petroleum Reserve in specified quantities, whether such quantities are equal to or more or less than the exchange partner's exchange/sale obligation for that period. In directing an exchange partner to deliver crude oil to the Strategic Petroleum Reserve, DOE shall consider the factors specified in paragraph (h)(2) of this section and the relative capabilities of the exchange partners to consummate delivery of the type of oil needed.

(ii) *Direct exchange for NPR oil.* Each exchange partner making delivery of oil to the Strategic Petroleum Reserve under paragraph (c)(2) of this section shall be entitled to receive at the lease automatic custody transfer units a volume of NPR crude oil in exchange determined by multiplying the volume of crude oil delivered to the Strategic Petroleum Reserve by the exchange ratio specified in paragraph (f) of this section, unless DOE elects to compensate any such exchange partner under paragraph (c)(2)(iii) of this section.

(iii) *Compensation by means other than direct exchange for NPR oil.* For any exchange period DOE may make a cash payment to any exchange partner making delivery of oil to the Strategic Petroleum Reserve under paragraph (c)(2)(i) of this section, in an amount equal to the estimated weighted average landed cost of [that exchange partner's] [all exchange partners'] [imported crude oil] [domistic crude oil the first sale of which is exempt from the provisions of Part 212 of this Chapter] for the month in which the exchange occurs, such estimated cost to be adjusted to the actual cost in the second month following the month in which the exchange occurs, in lieu of a direct exchange for NPR crude oil under paragraph (c)(2)(ii) of this section.

(d) *Exchange Notices.* Whenever the DOE determines to allocate crude oil for the Strategic Petroleum Reserve under this section, the DOE shall issue an Exchange Notice at least 20 days prior to the beginning of the exchange period. The Exchange Notice shall specify the total quantity of crude oil to be delivered to the Strategic Petreoleum Reserve; the relative quantities of each type of crude oil and the specifications of each such type; the exchange/sale obligation of each exchange partner; the exchange ratio for NPR crude oil; which method or methods of discharging exchange/sale obligations will be required for that exchange period under paragraph (c) of this section; and any other special terms or conditions applicable to exchange transactions for that exchange period.

(e) *Exchange partners' exchange/sale obligations.*—(1) *Total exchange obligation.* The total exchange/sale obligation for each exchange period shall be that quantity of crude oil which the DOE determines should be acquired

for the Strategic Petroleum Reserve for that exchange period by means of the regulated exchange or sale transactions provided for in this section. The total exchange/sale obligation shall be published in the Exchange Notice for each exchange period.

(2) *Calculation of exchange/sale obligation of each exchange partner.* (i) The DOE shall compute an exchange/sale obligation for each exchange partner for each exchange period as provided in paragraph (e)(3) of this section.

(ii) With DOE's approval part or all of any exchange partner's exchange/sale obligation may be traded to any other firm any time prior to the beginning of or during the exchange period. Any such trade, however, shall not relieve the exchange partner of its obligation in the event the other firm fails to perform.

(3) *Computation of exchange/sale obligation.* (i) The exchange/sale obligation for each exchange partner shall consist of that exchange partner's fixed percentage share as calculated under paragraph (e)(3)(ii) of this section multiplied by the total exchange/sale obligation for all exchange partners.

(ii) An exchange partner's fixed percentage share is its proportionate shre of the total runds to stills of all exchange partners reported during the period from August 1, 1979 through July 31, 1980.

(4) *Credit for oil supplied through non-regulated exchange or sale.* For each barrel of crude oil an exchange partner delivers to the Strategic Petroleum Reserve after July 1, 1980, in a sale or exchange other than pursuant to this rule, the exhange partner shall receive a one-barrel credit against its excnange/sale obligation for the first or current exchange period. Any unused credit shall be applied to the next exchange period.

(5) [Alternative 1: *Carryover adjustments.* To the extent the volume of crude oil actually delivered to the Stategic Petroleum Reserve by any exchange partner in any exchange period is more or less than the volume of that partner's exchange/sale obligation for that period, that exchange partner's exchange/sale obligation for the succeeding exchange period shall be increased or decreased.]

[Alternative 2: *Adjustments among exchange partners.* If any exchange partner is directed to supply crude oil to the Strategic Petroleum Reserve in any exchange period under paragraph (c)(2)(i) of this section in an amount in excess of its exchange/sale obligation for that period then such exchange partner shall be reimbursed in the amount of such excess by means of sales or trades of crude oil by those exchange partners that have not been directed to fully satisfy their exchange/sale obligations for that period.]

(f) *Exchange ratio for NPR crude oil defined.*

[Alternative Proposal 1: (1) *Numerator.* The numerator of the ratio shall be the estimated weighted average delivered cost, to all refiners for the month in which the NPR crude oil is to be delivered to the exchange partner, of all generic imported crude oils and domestic crude oils the first sale of which is exempt from the ceiling price limitations of Part 212 of this chapter meeting the specifications of the type of crude oil being delivered to the Strategic Petroleum Reserve, such estimated cost to be adjusted to the actual cost in the second month following the month in which the exchange occurs.

(2) *Denominator.* (1) For purposes of an exchange of NPR crude oil from Reserve Number 3 (Teapot Dome), the denominator of the ratio shall be the average of the two highest posted prices for domestic crude oil the first sale of which is exempt from the ceiling price limitations of Part 212 of this Chapter of like quality produced in the State of Wyoming.

(ii) For the purposes of an exchange of NPR crude oil from Reserves Number 1 (Elk Hills) or Number 2 (Buena Vista), the denominator of the ratio shall be the average of the two highest posted prices for domestic crude oil the first sale of which is exempt from the ceiling price limitations of Part 212 of this Chapter of like quality produced from each of at least three fields to be designated by DOE.

(iii) The posted prices used shall be those in effect at the time the NPR crude oil is to be delivered to the exchange partner. However, if subsequent to the delivery of the NPR crude oil any price is posted having a retroactive effective date encompassing the delivery date, then the exchange ratio shall be adjsuted accordingly. No posted price shall be used in the computation unless an actual purchase has been completed at that price.]

[Alternative Proposal 2: (1) *Barrel-for-barrel exchange.* Crude oil delivered to the Strategic Petroleum Reserves shall be exchanged barrel-for-barrel with NPR crude oil.

(i) An adjustment shall be made for differences in API gravity between the crude oil delivered to the Strategic Petrolieum Reserve and the NPR crude oil. For each 0.1 (one-tenth) degree API gravity that crude delivered to the Strategic Petroleum Reserve is below or above the API gravity of the NPR crude oil being exchanged, a cash payment equal to five cents per barrel shall be made to or from the DOE, respectively.

(ii) An adjustment shall be made for differences in sulfur content between the crude oil delivered to the Strategic petroleum Reserve and the NPR crude oil. For each 0.1 (one-tenth) percent sulfur content that crude oil delivered to the Strategic Petroleum Reserve is above or below the sulfur content of the NPR crude oil being exchanged, a cash payment equal to ten cents per barrel shall be made to or from the DOE, respectively.

(iii) Additional adjustments to account for differences in location and transportation of crude oil delivered to the Strategic Petroleum Reserve and NPR crude oil being exchanged may be made.

(2) *Payment in kind.* The DOE may require that payment for adjustments be made in crude oil of equal value in lieu of cash payments. For crude oil payments, the quantity of crude oil to be transferred to or from the DOE shall be based upon the total value of all adjustments, divided by the value of a barrel of crude oil delivered to the Strategic Petroleum Reserve (for payments made to the DOE), or the value of a barrel of NPR crude oil being exchanged (for payments made by the DOE).

(i) For purposes of computing the value of crude oil delivered to the SPR, the value shall be the estimated weighted average delivered cost, to all refiners for the month in which the NPR crude oil is to be delivered to the exchange partner, of all generic imported crude oils and domestic crude oils the first sale of which is exempt from the ceiling price limitations of part 212 of this chapter meeting the specifications of the type of crude oil being delivered to the Strategic Petroleum Reserve, such estimated cost to be adjusted to the actual cost in the second month following the month in which the exchange occurs.

(ii) For purposes of computing the value of NPR crude oil being exchanged:

(A) For purposes of an exchange of NPR crude oil from Reserve Number 3 (Teapot Dome), the value shall be the average of the two highest posted prices for domestic crude oil the first sale of which is exempt from the ceiling price limitations of Part 212 of this Chapter from the ceiling price limitations of Part 212 of this Chapter of like quality produced in the State of Wyoming.

(B) For the purposes of an exchange of NPR crude oil from Reserves Number 1 (Elk Hills) or Number 2, (Buena Vista), the value shall be the average of the two highest posted prices for domestic crude oil the first sale of which is exempt from

the ceiling price limitations of Part 212 of this Chapter of like quality produced from each of at least three fields to be designated by DOE.

(iii) The posted prices used shall be those in effect at the time the NPR crude oil is to be delivered to the exchange partner. However, if subsequent to the delivery of the NPR crude oil any price is posted having a retroactive effective date encompassing the delivery date, then the exhange ratio shall be adjusted accordingly. No posted price shall be used in the computation unless an actual purchase has been completed at that price.]

[Alternative Propsal 3: The numerator of the ratio shall be computed by multiplying, for the oil type delivered to the Strategic Petroleum Reserve, the average percentage yield per volume of naphtha, distillate, gas oil, and residuum times the wholesale price for each such product during the month of the previous year corresponding to the month of delivery. The denominator of the ratio shall be computed by multiplying, for the NPR oil type being exchanged, the average percentage yield per volum of naphtha, distillate, gas oil, and residuum ties the average wholesale price for each such product during the month of the previous year corresponding to the month of delivery.]

(g) *Post-delivery adjustments.* In any exchange transaction, if, subsequent to the time deliveries are completed, adjustments to the volumes of crude oil received and delivered by DOE are necessary to equalize the transaction, and DOE finds it impracticable to deliver or receive additional crude oil, DOE may provide such adjustments by making a cash payment to the exchange partner or by directing the exchange partner to make a cash payment to DOE.

(h) *Delivery of oil to the Strategic Petroleum Reserve.* (1) When exchange/sale obligations are required to be discharged in accordance with paragraph (c)(2) of this section, each exchange partner (unless DOE directs certain exchange partners to deliver schedule to DOE at the address specified in the Exchange Notice as soon as practicable, but no later than 15 days after publication of the Exchange Notice. If, however, the Exchange Notice permits the submission of voluntary exchange offers for that exchange period under paragraph (c)(1) of this section, then the proposed delivery schedule shall be submitted no later than 15 days after DOE has notified the exchange partners that voluntary exchanges are insufficient and that exchange/sale obligations are to be discharged by means of mandatory exchange/sale transactions, in accordance with paragraph (c)(2) of this section. The proposed delivery schedule shall list, for each proposed delivery date, the types of oil to be delivered, the relative volumes of each oil type, and the exchange partner's preference regarding the terminal to which the oil is proposed to be delivered.

(2) DOE shall consider each proposed delivery schedule submitted under paragraph (h)(1) of this section in the order received and shall notify each exchange partner within five days of receipt of the proposed schedule whether the proposed schedule has been accepted or rejected in whole or in part. All ship nomination and acceptance procedures shall be in accordance with any then-current port manual of the relevant receiving terminal of the Strategic Petroleum Reserve. In determining whether to accept or reject a proposed delivery schedule, DOE shall consider the Strategic Petroleum Reserve's dock and terminal availability and capacity and prior delivery commitments. In its notice rejecting a proposed schedule in whole or in part DOE shall explain its reasons for the rejection and may propose alternative dates, volumes, and/or types of oil which would be appropriate for delivery. To account for daily receipt capabilities at the various terminals, DOE shall in all cases specify the terminal to which a particular shipment shall be delivered.

(3) Upon notice by DOE of acceptance of an exchange partner's delivery schedule, the exchange partner shall be obligated to make delivery of the type and volume of crude oil scheduled on the date scheduled, plus or minus two days. Within five days of receipt of a DOE notice rejecting an exchange partner's delivery schedule, the exchange partner shall submit an alternative proposed delivery schedule to DOE. If such proposed delivery schedule is unacceptable, DOE may specify the delivery schedule.

(4) Each exchange partner shall coordinate its deliveries of oil to the Strategic Petroleum Reserve with its receipts from the NPR in a manner such that at the end of the first 90 days of each exchange period, and again at the end of each exchange period, the exchange partner has not received a volume of NPR crude oil that is greater, multiplied times the exchange ratio, than the volume of crude oil it has delivered to the Strategic Petroleum Reserve.

Alternative Proposal No. 2: Amendments to the Crude Oil Buy/Sell Program to Required Exchange of Naval Petroleum Reserves Crude Oil for Crude Oil to be Stored in the Strategic Petroleum Reserve

§ 211.62 [Amended]

1. Section 211.62 is amended by revising the definition of "refiner-buyer" and by adding the definitions of "Naval Petroleum Reserves" and "NPR crude oil" in proper alphabetical order to read as follows:

* * * * *

"Naval Petroleum reserves (NPR)" means Naval Petroleum Reserve Number 1 (Elk Hills), located in Kern County, California, established by Executive Order of the President, dated September 2, 1912; Naval Petroleum Reseve Number 2, (Buena Vista), located in Kern County, California, established by Executive Order of the President, dated December 13, 1912; Naval Petroleum Reserve Number 3 (Teapot Dome), located in Natrona County, Wyoming, established by Executive Order of the President, dated April 30, 1915.

"NPR crude oil" means crude oil produced from the Naval Petroleum Reserves.

* * * * *

"Refiner-buyer" means any small refiner which is determined to be eligible for an allocation of crude oil pursuant to § 211.65 of this subpart. Refiner-buyer shall also mean the United States Government when crude oil is allocated for the Strategic Petroleum Reserve pursuant to § 211.65(1) of this subpart.

2. Section 211.65 is amended by adding a new paragraph (1) to read as follows:

§ 211.65 Method of allocation.

* * * * *

(l) *Special provisions governing allocation of crude oil for the Strategic Petroleum Reserve and exchanges of NPR crude oil.—*

(1) *Provisions applicable to allocations of oil for the Stategic Petroleum Reserve.* Except as otherwise provided in this paragraph (1), only the provisons of paragraphs (e) through (h), (i)(2) through i(5), and (j)(3) of this section shall apply to the allocation of crude oil for the Strategic Petroleum Reserve.

(2) *Allocation of crude oil for the Strategic Petroleum Reserve.* For any allocation period the Strategic Petroleum Reserve may be assigned an allocation of suitable grade and quality crude oil in such quantities as DOE determines should be acquired for

storage in the Strategic Petroleum Reserve for that allocation period by means of the regulated exchange or sale transactions provided for in this section.

(3) *Buy/Sell notice.* The buy/sell notice specified in paragraph (g) of this section shall also specify the relative volumes of crude oil allocated to the Strategic Petroleum Reserve for which DOE will compensate refiner-sellers by cash payments in accordance with paragraph (i)(4) of this section and by exchange of NPR oil; the relative quantities of each type of crude oil to be delivered to the Strategic Petroleum Reserve and the specifications of each such type; the exchange ratio for NPR crude oil applicable to directed deliveries; and any other special terms or conditions applicable to sale or exchange transactions with the Strategic Petroleum Reserve for that allocation period.

(4) *Discharge of allocation obligations to the Strategic Petroleum Reserve and method of payment*—(i) *Negotiated transactions.* In negotiated transactions specified in paragraph (g)(1) of this section, DOE may compensate any refiner-seller who delivers oil to the Strategic Petroleum Reserve by means of a negotiated exchange of NPR oil, in lieu of cash payment as provided in paragraph (i)(4) of this section.

(ii) *Directed transactions.* Each refiner-seller directed to deliver oil to the Strategic Petroleum Reserve under paragraph (j)(3) of this section that is not compensated in cash under paragraph (i)(4) of this section shall receive a volume of NPR crude oil in exchange determined by multiplying the volume of crude oil delivered to the Strategic Petroleum Reserve by the exchange ratio provided in paragraph (1)(5) of this section.

(iii) *Credit for oil supplied through competitive exchange or sale.* Any refiner-seller which delivers crude oil to the Strategic Petroleum Reserve after July 1, 1980, in a sale or exchange other than pursuant to this rule, shall receive a barrel-for-barrel credit against its total allocation obligation for the first or current allocation period in which crude oil is allocated to the Strategic Petroleum Reserve. Any unused credit shall be applied against the allocation obligation in the next allocation period in which crude oil is allocated to the Strategic Petroleum Reserve.

(5) *Exchange ratio for NPR crude oil defined.*

[Alternative Proposal 1: (A) *Numerator.* The numerator of the ratio shall be the estimated weighted average delivered cost, to all refiners for the month in which the NPR crude oil is to be delivered to the refiner-seller, of all generic imported crude oils and domestic crude oils the first sale of which is exempt from the ceiling price limitations of Part 212 of this chapter meeting the specifications of the type of crude oil being delivered to the Strategic Petroleum Reserve. In the second month following the month in which the exchange occurs, such estimated costs shall be adjusted to the actual costs.

(B) *Denominator.* (*1*) For purposes of an exchange of NPR crude oil from Reserve Number 3 (Teapot Dome), the denominator of the ratio shall be the average of the two highest posted prices for domestic crude oil the first sale of which is exempt from the ceiling price limitations of Part 212 of this chapter of like quality produced in the State of Wyoming.

(*2*) For the purposes of an exchange of NPR crude oil from Reserves Number 1 (Elk Hills) or Number 2 (Buena Vista), the denominator of the ratio shall be the average of the two highest posted prices for domestic crude oil the first sale of which is exempt from the ceiling price limitations of Part 212 of this chapter of like quality produced from each of at least three fields to be designated by DOE.

(*3*) The posted prices used shall be those in effect at the time the NPR crude oil is to be delivered to the refiner-seller. However, if subsequent to the delivery of the NPR crude oil any price is posted having a retroactive effective date encompassing the delivery date, then the computation of the exchange ratio shall be adjusted accordingly. No posted price shall be used in the computation unless an actual purchase has been completed at that price.]

[Alternative Proposal 2: (A) *Barrel-for-barrel exchange.* Crude oil delivered to the Strategic Petroleum Reserve shall be exchanged barrel-for-barrel with NPR crude oil.

(*1*) An adjustment shall be made for differences in API gravity between the crude oil delivered to the Strategic Petroleum Reserve and the NPR crude oil. For each 0.1 (one-tenth) degree API gravity that crude oil delivered to the Strategic Petroleum Reserve is below or above the API gravity of the NPR crude oil being exchanged, a cash payment equal to five cents per barrel shall be made to or from the DOE, respectively.

(*2*) An adjustment shall be made for differences in sulfur content between the crude oil delivered to the Strategic Petroleum Reserve and the NPR crude oil. For each 0.1 (one-tenth) percent sulfur content that crude oil delivered to the Strategic Petroleum Reserve is above or below the sulfur content of the NPR crude oil being exchanged, a cash payment equal to ten cents per barrel shall be made to or from the DOE, respectively.

(*3*) Additional adjustments to account for differences in location and transportation of crude oil delivered to the Strategic Petroleum Reserve and NPR crude oil being exchanged may be made.

(B) *Payment in kind.* The DOE may require that payment for adjustments be made in crude oil of equal value in lieu of cash payments. For crude oil payments, the quantity of crude oil to be transferred to or from the DOE shall be based upon the total value of all adjustments, divided by the value of a barrel of crude oil delivered to the Strategic Petroleum Reserve (for payments made to the DOE, or the value of a barrel of NPR crude oil being exchanged for payments made by the DOE).

(*1*) For purposes of computing the value of crude oil delivered to the Strategic Petroleum Reserve. The value shall be the estimated weighted average delivered cost, to all refiners for the month in which the NPR crude oil is to be delivered to the refiner-seller, of all generic imported crude oils and domestic crude oils the first sale of which is exempt from the ceiling price limitations of Part 212 of this chapter meeting the specifications of the type of crude oil being delivered to the Strategic Petroleum Reserve, such estimated cost to be adjusted to the actual cost in the second month following the month in which the exchange occurs.

(*2*) For purposes of computing the value of NPR crude oil being exchanges:

(*i*) For purposes of an exchange of NPR crude oil from Reserve Number 3 (Teapot Dome), the value shall be the average of the two highest posted prices for domestic crude oil the first sale of which is exempt from the ceiling price limitations of Part 212 of this Chapter of like quality produced in the State of Wyoming.

(*ii*) For the purposes of an exchange of NPR crude from Reserve Number 1 (Elk Hills) or Number 2 (Buena Vista), the value shall be the average of the two highest posted prices for domestic crude oil the first sale of which is exempt from the ceiling price limitations of Part 212 of this Chapter of like quality produced from each of at least three fields to be designated by DOE.

(*3*) The posted prices used shall be those in effect at the time the NPR crude oil is to be delivered to the refiner-seller. However, if subsequent to the delivery of the NPR crude oil any price is posted having a retroactive effective date encompassing the delivery date, then the exchange ratio shall be adjusted accordingly. [No posted price shall be

used in the computation unless an actual purchase has been completed at that price.]

[Alternative Proposal 3: The Numerator of the ratio shall be computed by multiplying, for the crude oil type delivered to the Strategic Petroleum Reserve, the average percentage yield per volume of naphtha, distillate, gas oil, and residuum times the wholesale price for each such product during the month of the previous year corresponding to the month of delivery. The denominator of the ratio shall be computed by multiplying, for the NPR crude oil type being exchanged, the average percentage yield per volume of naphtha, distillate, gas oil, and residuum times the average wholesale price for each such product during the month of the previous year corresponding to the month of delivery.]

Additional Proposal: Amendments to the Crude Oil Buy/Sell Program To Provide for a Special Allocation of Crude Oil to Refiners Experiencing a Loss of NPR Crude Oil

Section 21.65 is amended by adding a new subsection (iv) to paragraph (c)(2) to read as follows:

§ 211.65 Method of allocation.

* * * * *

(c) *Review of eligibility for allocations, adjustments to purchase opportunities, and emergency allocations.*

(2) *Emergency allocations.* (i) * * *

(iv) *Special allocation due to loss of supply of NPR crude oil.*—(A) *Eligibility.* Any small refiner may apply to ERA for a special allocation of crude oil with respect to one or more of its refineries if: (*1*) the refiner has processed in the refinery for which an allocation is sought a volume of NPR crude oil in excess of five percent of such refinery's crude oil runs to stills during the allocation period prior to the period for which an allocation is sought: (*2*) the refinery has incurred or will incur, during the period for which an allocation is sought, at least a fifty percent loss of its supply of NPR crude oil for such refinery due to the exchange of such NPR oil for oil delivered to the Strategic Petroleum Reserve; (*3*) the refiner has exhausted any opportunity to obtain NPR crude oil under 10 U.S.C. 7430(d), during the period for which an allocation is sought; (*4*) the refinery as a result of the loss of its supply of NPR crude oil projects that the crude oil runs to stills for such refinery during the period for which an allocation is sought will be less than the national utilization rate (as used in paragraph (c)(2)(iii) of this section) for all refiners during the second month prior to the period for which an allocation is sought; and (*5*) the refiner cannot reasonably be expected to replace its lost supplies through its own efforts.

(B) *Allocation.* In the event ERA determines that a small refiner is eligible for a special allocation with respect to one or more of its refineries, ERA may assign a maximum allocation for the eligible refinery or refineries for one or more months equal to the volume of NPR crude oil which has been lost for that period, except that no small refiner may receive a special allocation of crude oil for any of its refineries for more than two allocation periods.

[FR Doc. 80-24591 Filed 8-14-80; 8:45 am]
BILLING CODE 6450-01-M

Federal Register

Friday
August 15, 1980

Part VII

Department of the Interior

Fish and Wildlife Service

Leon Springs Pupfish, Listing as Endangered With Critical Habitat; McKittrick Pennyroyal, Proposed Determination as a Threatened Species and Determination of Critical Habitat; Review on 18 Species of Foreign Reptiles

DEPARTMENT OF THE INTERIOR

Fish and Wildlife Service

50 CFR Part 17

Endangered and Threatened Wildlife and Plants; Listing of Leon Springs Pupfish as Endangered With Critical Habitat

AGENCY: Fish and Wildlife Service, Interior.

ACTION: Final rule.

SUMMARY: The Service determines the Leon Springs pupfish (*Cyprinodon bovinus*), to be Endangered with Critical Habitat in Diamond Y Spring and its outflow stream Leon Creek in Pecos County, Texas. This is the only known wild population of this species. This action is being taken due to the decline of the population and alteration of its habitat. Decline in the population has resulted from the hybridization with a closely related species of pupfish (*Cyprinodon variegatus*) which was introduced into Leon Creek. This rule provides the full protection of the Endangered Species Act, as amended to the Leon Springs pupfish.

DATES: This rule becomes effective on September 15, 1980.

ADDRESSES: Questions concerning this action may be addressed to: Director, (OES), U.S. Fish and Wildlife Service, Department of the Interior, Washington, D.C. 20240. Comments and materials relating to the rule are available for public inspection by appointment during normal business hours at the Service's Office of Endangered Species Suite 500, 1000 N. Glebe Road, Arlington, Virginia.

FOR FURTHER INFORMATION CONTACT: Mr. John L. Spinks, Jr., Chief, Office of Endangered Species, U.S. Fish and Wildlife, Washington, D.C. (703/235-2771).

SUPPLEMENTARY INFORMATION:

Background

The Leon Springs pupfish was proposed as Endangered with Critical Habitat on August 15, 1978. Subsequently, Congress passed the Endangered Species Act Amendments of 1978, which substantially modified the procedures the Service must follow when designating Critical Habitat. In order to bring the Service in compliance with the amendments, the Critical Habitat portion of the original proposal was withdrawn March 6, 1979 (FR 44 12382-12384). Critical Habitat for the Leon Springs pupfish was reproposed on May 16, 1980 (FR 45 32350-32353). A public meeting was held in Fort Stockton, Texas, on June 13, 1980.

The Leon Springs pupfish was discovered in 1851 from Leon Springs, approximately 8 miles west of Fort Stockton, Texas. Since that time, Leon Springs has been radically modified (diverted, dammed, and poisoned) and ceased flowing in 1958 due to excessive groundwater removal. The pupfish disappeared from this locality prior to 1938 and was thought to be extinct. In 1965 the species was rediscovered by W. L. Minckley and W. E. Barber from Diamond Y Spring, located approximately 9 miles north of Fort Stockton, Texas.

The species is a small (1.5 inches in length) robust fish varying in body color from dusky gray to iridescent blue. Sexes can be readily distinguished by shape, color, and lateral markings. The Leon Springs pupfish inhabits highly saline habitat preferring quiet waters near the edges of shallow pools with a minimal growth of vegetation. Male pupfish guard small territories in shallow waters, where the females are attracted by courtship behaviors, spawning takes place, and eggs are deposited. Pupfish do much of their feeding from the bottom mud or from vegetation consuming invertebrates, detritus, diatoms, and vascular plants. The population of Leon Springs pupfish existing in Diamond Y Spring and its outflow stream seems to be in good condition with summer densities reaching more than 3 fish per square yard in shallow open habitats.

Much of the original habitat of this species was destroyed by diversion of water for irrigation, impoundment construction, and the desiccation of spring flows caused by excessive pumping of the underground aquifer. Currently, the single remaining pupfish habitat is threatened by oil pollution, diminishing spring flows, and the release of harmful exotic fishes.

Section 4(a) of the Act (16 U.S.C. 1531 et seq.) states: "General—(1) The Secretary shall by regulation determine whether any species is an endangered species or a threatened species because of any of the following factors:

(1) The present or threatened destruction, modification or curtailment of its habitat or range;
(2) Overutilization for commercial, sporting, scientific, or educational purposes;
(3) Disease or predation;
(4) the inadequacy of existing regulatory mechanisms; or
(5) other natural or man-made factors affecting its continued existence."

This authority has been delegated to the Director.

Summary of Factors Affecting the Species

The Leon Springs pupfish was historically known only from Leon Springs, Leon Creek, and Diamond Y Spring, located west and north of Fort Stockton, Texas. The diversion of spring waters for irrigation and the excessive removal of ground water was responsible for the drying of Leon Springs and the upper portion of Leon Creek. Presently, this species is limited to Diamond Y Spring and its outflow into Leon Creek, approximately a 4 mile stretch of permanent aquatic habitat, which is threatened by several habitat and environmental disturbances.

The findings from recent studies and available literature and summarized herein under each of the five criteria of Section 4(a) of the Act. These factors, and their application to the Leon Springs pupfish, are as follows:

1. *The present or threatened destruction, modification, or curtailment of its habitat or range.* The present habitat of the Leon Springs pupfish is surrounded by an active oil and gas field. A refinery is located approximately 500 yards upstream of the main spring head that supplies permanent water to the pupfish habitat. In the past oil spills have occurred in this area and have caused considerable fish mortality. Although oil companies have taken actions to minimize leakage of petroleum and waste products into Diamond Y Spring and Leon Creek, the potential for substantial oil spills still exist.

The pumping of groundwater in Pecos County, Texas, has resulted in the desiccation of several springs and has reduced the discharge from Diamond Y and associated springs supporting Leon Creek. If underground water supplies continue to be removed at excessive rates or are otherwise altered, the wild Leon Springs pupfish population and its essential natural habitat could be destroyed.

2. *Overutilization for commercial, sporting, scientific, or educational purposes.* Not applicable.

3. *Disease or predation.* Not applicable.

4. *The inadequacy of existing regulatory mechanisms.* State laws concerning endangered species of Texas prohibit the taking of this pupfish, but do not provide mechanisms to encourage habitat protection. Listing the Leon Spring pupfish would require Federal agencies to review their actions prior to the commitment of resources to assure

that their proposals would either conserve listed species or are not likely to jeopardize the continued existence of listed species or both.

5. *Other natural of man-made factors affecting its continued existence.* The sheepshead minnow (*Cyprinodon variegatus*), which is closely related to the Leon Springs pupfish, was released into Leon Creek in 1974. This introduction resulted in the widespread hybridization between *Cyprinodon variegatus* and *Cyprinodon bovinus*, threatening the genetic purity of the Leon Springs pupfish. A carefully supervised fish poisoning program and intensive selective seining efforts successfully removed all exotic sheepshead minnows and hybrids from Diamond Y Spring and Leon Creek by August of 1978. Although the present Leon Springs pupfish population seems to be genetically pure, many areas of its habitat are readily accessible and still vulnerable to the release of harmful exotics.

Summary of Comments and Recommendations

Section 4(b)(1)(C) of the Act requires that a summary of all comments and recommendations received be published in the Federal Register prior to adding any species to the list of Endangered and Threatened Wildlife and Plants. Comments received on the original proposal and the reproposal of Critical Habitat are summarized below. A total of six comments were received, three from the State of Texas, two from conservation organizations, and one from the Rio Grande Fishes Recovery Team.

The Texas Department of Highways and Public Transportation recommended that the state-owned right-of-way plus 400 feet on each side of Texas Highway 18 be excluded so as not to jeopardize the possible future widening or reconstruction of Texas Highway 18 with Federal funds. The Texas Department of Water Resources requested a copy of the environmental assessment and expressed their reservations concerning the proposed actions and requested no action be taken until appropriate State agencies had commented on the environmental assessment. They felt that no action should be taken until they have assurances that the proposed designations do not adversely affect water use. The Texas Parks and Wildlife Department responded for Governor Brisco and agreed with the proposal for the Leon Springs pupfish. Two conservation organizations, the Lone Star Chapter of the Sierra Club and the New York Zoological Society supported the Endangered status and Critical Habitat for the Leon Springs pupfish. The Rio Grande Fishes Recovery Team supported the listing for the Leon Springs pupfish and Critical Habitat as proposed.

Discussion and Conclusions

The concern expressed by the Texas Department of Highways and Public Transportation and the Texas Department of Water Resources addresses the Designation of Critical Habitat on their activities. The Service foresees no significantly impact on their activities. Actually, there may be many kinds of actions which can be carried out within the Critical Habitat of the Leon Springs pupfish which would not be expected to adversely affect the species. Indeed, no activity is automatically excluded. This point is poorly understood by much of the public. There is widespread and erroneous belief that a Critical Habitat designation is somewhat akin to the establishment of a wildlife refuge and automatically closes an area to most uses. A Critical Haibitat designation applies only to Federal agencies, and is an official notification to these agencies that their responsibilities under section 7 of the Endangered Species Act are applicable in a certain area.

The Service wishes to emphasize that it will work in close cooperation with any agency to minimize impacts of the present rule on future developments in the Diamond Y Springs and Leon Creek area. No automatic limitations are imposed by a designation of Critical Habitat. It does, however, assist Federal agencies in insursing that their actions are not likely to jeopardize the continued existence of the species.

During the extensive public comment period and associated meeting, no Federal activities were pinpointed which would be affected by such a designation. In addition, Federal agencies which were contacted were unable to identify any adverse impacts.

After a thorough review and consideration of all the information available, the Director has determined that the Leon Springs pupfish is in danger of becoming extinct throughout all or a significant portion of its range due to one or more of the factors described in section 4(a) of the Act, as specified in the proposal of August 15, 1978 (FR 43 36117–36120). Listing as Endangered and determination of Critical Habitat will provide this species with necessary protection to ensure its survival.

Critical Habitat

The Act defines "critical habitat" as (i) the specific areas within the geographical area occupied by the species, at the time it is listed in accordance with the provisions of section 4 of this Act, on which are found those physical or biological features (I) essential to the conservation of the species and (II) which may require special management considerations or protection; and (ii) specific areas outside the geographic area occupied by the species at the time it is listed in accordance with the provisions of section 4 of this Act, upon a determination by the Secretary that such areas are essential for the conservation of the species.

The Service believes that the entire known range of the species under consideration should be designated as Critical Habitat. This species occupies an extremely restricted range, and is, therefore, highly susceptible to changes in habitat. The Critical Habitat area designated is an area on which are those evolutionary, ecological, behavioral, and physiological features essential to the conservation of the species. The physical and biological features of this habitat are such as to require special management considerations and protection.

Section 4(b)(4) of the Act requires the Service to consider economic and other impacts of specifying a particular area as Critical Habitat. The Service has prepared an impact analysis and believes that economic and other impacts of this action are not significant in the foreseeable future. The Service is notifying Federal agencies that may have jurisdiction over the land and water under consideration in this action.

Section 4(f)(4) of the Act requires, to the maximum extent practicable, that any rule which determines Critical Habitat be accompanied by a brief description and evaluation of those activities which in the opinion of the Director, may adversely modify such habitat if undertaken, or may be impacted by such designation. Such activities are identified below for these species.

The petroleum production operations in the vicinity of Diamond Y Spring and Leon Creek could potentially affect the Leon Springs pupfish through an accidental oil spill or indirect modification of the underground water supply. These potential adverse impacts can be eliminated or minimized by implementing appropriate preventive measures. Oil companies involved have been receptive to recommendtions concerning the protection of the Leon

Springs pupfish habitat and the Service plans to encourage continued cooperation.

The land surrounding Diamond Y Spring and Leon Creek is also used for cattle grazing. However, the saline water from the springs is unsuitable for livestock consumption and the Leon Springs pupfish habitat is rarely disturbed by cattle. If it were to occur in the future excessive groundwater pumping in the vicinity of the proposed Critical Habitat for agriculture or other purposes could be detrimental to the pupfish by reducing or eliminating spring flow.

No Federal agency has jurisdiction in the Critical Habitat area, nor should any current or proposed Federal project affect the Leon Springs pupfish population.

Federal agencies (U.S. Department of Energy and Environmental Protection Agency) regulating the petroleum industry would be required to enter into section 7 consultation if an action they license or authorize might affect the Critical Habitat. At this time the petroleum companies are not planning to construct new gas pipelines or other developments that would require Federal permits.

The proposed Critical Habitat for the Leon Springs pupfish is as follows: Diamond Y Spring and its outflow stream, Leon Creek; from the head of Diamond Y Spring downstream in Leon Creek to a point 1 mile northeast of the Texas Highway 18 crossing, approximately 10 miles north of Fort Stockton, Texas. This watercourse is located in sections 506, 507, 508, 509, 552, and 553 of the Garcia, Montez, and Duran Land Grant in Pecos County, Texas.

Effect of the Rule

Section 7(a) of the Act provides:

(1) The Secretary shall review other programs administered by him and utilize such programs in furtherance of the purposes of this Act. All other Federal agencies shall, in consultation with and with the assistance of the Secretary, utilize their authorities in furtherance of the purposes of this Act by carrying out programs for the conservation of Endangered species and Threatened species listed pursuant to section 4 of this Act. (2) Each Federal agency shall, in consultation with and with the assistance of the Secretary, insure that any action authorized, funded, or carried out by such agency (hereinafter in this section referred to as an "agency action") is not likely to jeopardize the continued existence of any Endangered species or Threatened species or result in the destruction or adverse modification of habitat of such species which is determined by the Secretary, after consultation as appropriate with the affected States, to be critical, unless such agency has been granted an exemption for such action by the Committee pursuant Subsection (h) of this section. In fulfilling the requirements of this paragraph, each agency shall use the best scientific and commercial data available. (3) Each Federal agency shall confer with the Secretary on any agency action which is likely to jeopardize the continued existence of any species proposed to be listed under section 4 or result in the destruction or adverse modification of critical habitat proposed to be designated for such species.

Provisions for Interagency Cooperation are codified at 50 CFR Part 402. If published as a final rule this proposal would require Federal agencies not only to insure that activities they authorize, fund, or carry out are not likely to jeopardize the continued existence of the Leon Springs pupfish, but also insure that their actions are not likely to result in the destruction or adverse modification of their Critical Habitat. Private activity will not be affected by the rule unless it involves a taking under section 9 of the Endangered Species Act. Other activities affecting the habitat will be impacted only if there is Federal involvement in those activities. No significant modifications to projects with Federal involvement are presently foreseen.

With respect to the Leon Springs pupfish all prohibitions of section 9(a)(1) of the Act, as implemented by 50 CFR 17.21 and 17.23, would apply. These prohibitions, in part, would make it illegal for any person subject to the jurisdiction of the United States to take, import or export, ship in interstate commerce in the course of a commercial activity, or sell or offer for sale these species in interstate or foreign commerce. It also would be illegal to possess, sell, deliver, carry, transport, or ship any such wildlife which was illegally taken. Certain exceptions would apply to agents of the Service and State conservation agencies.

Regulations published in the Federal Register of September 26, 1975 (40 FR 44412), codified at 50 CFR 17.22 and 17.23 and provide for the issuance of permits to carry out otherwise prohibited activities involving Endangered or Threatened species under certain circumstances. Such permits involving Endangered species are available for scientific purposes or to enhance the propagation or survival of the species. In some instances, permits may be issued during a specified period of time to relieve undue economic hardship which would be suffered if such relief were not available.

Effect Internationally

The Service will review the status of the Leon Springs pupfish to determine whether it should be proposed to the Secretariat of the Convention on International Trade in Endangered Species of Wild Fauna and Flora for placement upon the appropriate appendix to that Convention, and whether it should be considered under the Convention on Nature Protection and Wildlife Preservation in the Western Hemisphere, or other appropriate international agreements.

National Environmental Policy Act

A final environmental assessment has been prepared and is on file in the Service's Washington Office of Endangered Species. This assessment is the basis for a decision that this rule is not a major Federal action that significantly affects the quality of the human environment within the meaning of section 102(2)(C) of the National Environmental Policy Act of 1969.

The primary author of this rule is Dr. James D. Williams, Office of Endangered Species, U.S. Fish and Wildlife Service, Washington, D.C. 20240 (703/235-1975).

Note.—The Department of the Interior has determined that this is not a significant rule and does not require preparation of a regulatory analysis under Executive Order 12044 and 43 CFR Part 14.

Regulations Promulgation

Accordingly, Part 17, Subchapter B of Chapter I, Title 50 of the Code of Federal Regulations, is amended as set forth below:

§ 17.11 [Amended]

1. Section 17.11 is amended by adding, in alphabetical order, the following to the list of animals.

Species		Historic range	Vertebrate population where endangered or threatened	Status	When listed	Critical habitat	Special rules
Common name	Scientific name						
Fishes:							
Pupfish, Leon Springs	*Cyprinodon bovinus*	U.S.A. (Texas)	Entire	E		17.95(e)	NA

§ 17.95 [Amended]

2. Section 17.95(e), Fishes, is amended by adding Critical Habitat of the Leon Springs pupfish after that of the Alabama cavefish as follows:

Leon Springs Pupfish

(Cyprindon bouinus)

Texas, Pecos County. Diamond Y Spring and its outflow stream, Loen Creek; from the head of Diamond Y Spring downstream in Leon Creek to a point 1 mile northeast of the Texas Highway 18 crossing, approximately 10 miles north of Fort Stockton.

Leon Springs Pupfish

Pecos County, Tex.

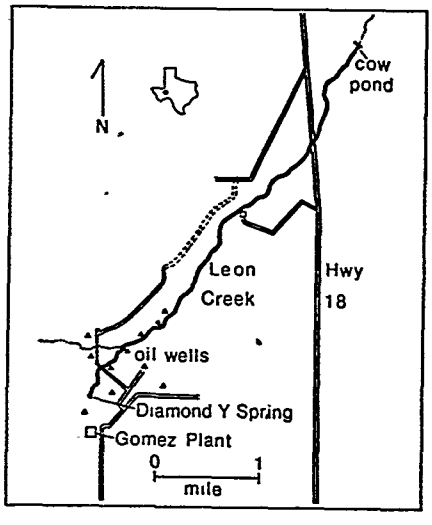

Dated: August 12, 1980.

Lynn A. Greenwalt,

Director, Fish and Wildlife Service.

[FR Doc. 80-24719 Filed 8-14-80; 8:45 am]

BILLING CODE 4310-55-M

DEPARTMENT OF THE INTERIOR
Fish and Wildlife Service
50 CFR Part 17

Endangered and Threatened Wildlife and Plants; Proposed Rule To Determine Hedeoma apiculatum (McKittrick Pennyroyal) To Be a Threatened Species and To Determine Its Critical Habitat

AGENCY: U.S. Fish and Wildlife Service, Department of the Interior.

ACTION: Proposed rule.

SUMMARY: The Service proposes to determine *Hedeoma apiculatum* W. S. Stewart (McKittrick Pennyroyal), a native plant of Texas and New Mexico, to be a Threatened species and to determine its Critical Habitat. The number of existing individuals of this species is estimated to be less than 950 and their reproductive potential appears to be low. The populations occurring on Federal lands are threatened by the gradual destruction of habitat through long-term overuse or through park development (trails, campsites, etc.). The single known population on private land is potentially threatened by any major change in land use. This proposal would allow some Federal protection provided by the Endangered Species Act of 1973, as amended. The Service seeks comment on this species.

DATE: Comments from the public must be received by November 13, 1980. Comments from the Governors of Texas and New Mexico must be received by November 13, 1980. A public meeting on this proposal will be held at the Carlsbad Public Library, Halaqueno Park, Carlsbad, New Mexico on August 27, 1980, at 7 p.m.

FOR FURTHER INFORMATION CONTACT: Mr. John L. Spinks, Jr., Chief, Office of Endangered Species, Fish and Wildlife Service, U.S. Department of the Interior, Washington, D.C. 20240, 703-235-2771.

ADDRESSES: Comments and materials concerning this proposal, preferably in triplicate, should be sent to the Director (FWS/OES), U.S. Fish and Wildlife Service, Department of the Interior, Washington, D.C. 20240. Comments and materials received will be available for public inspection by appointment during normal business hours at the Service's Office of Endangered Species, 1000 N. Glebe Road, Fifth Floor, Arlington, Va.

SUPPLEMENTARY INFORMATION: *Hedeoma apiculatum* W. S. Stewart (McKittrick Pennyroyal), a member of the mint family, was first collected in 1882, but remained undescribed until 1939. A long-lived perennial herb, this plant forms dense tufts of leaves from woody rootstocks and stands 10.0 to 15.0 cm in height. Its showy, pink flowers are solitary or in two to three flower clusters, two (2) cm in length, and as with most mints, the flowers are axillary and crowded towards the apex (Irving, in press).

Endemic to open, limestone rock surfaces and outcrops in canyons and along streamways in the Guadalupe Mountains of Texas and New Mexico at elevations above 1600 meters, this species is particularly vulnerable to disturbance (Riskin, 1974; Brown and Lowe, 1977). The surrounding vegetation is sparse and offers no protection. The substrate in which these plants are found consists mostly of sand caught in rock fissures and in weathered pockets of limestone (U.S.D.A., 1974), thus there exists no natural protection. The continued existence of this plant and the fragile habitat in which it occurs are being threatened by trampling, area development and other factors. This rule proposes to determine *Hedeoma apiculatum* to be Threatened and if made final would implement the protection provided by the Endangered Species Act of 1973, as amended. The following paragraphs further discuss the actions to date involving this plant, the threats to the plant, and effects of the proposed action.

Background

In the June 24, 1977, Federal Register (42 FR 32373-32381), the Service published a final rule under 50 CFR Part 17 detailing the regulations to protect Endangered and Threatened plant species. This rule established prohibitions and a permit procedure to grant exceptions, under certain circumstances, to be prohibitions. These regulations would offer protection to *Hedeoma apiculatum.*

The Department has determined that this is not a significant rule and does not require the preparation of a regulatory analysis under Executive Order 12044 and 43 CFR Part 14.

Summary of Factors Affecting the Species

Subsection 4(a) of the Endangered Species Act (16 U.S.C. 1531 *et seq.*) states that the Secretary of Interior shall determine whether any species is an Endangered species or a Threatened species due to one or more of the five factors described in that subsection. These factors and their application to *Hedeoma apiculatum* (McKittrick Pennyroyal) are as follows:

Hedeoma Apiculatum

Populations of *H. apiculatum* in Guadalupe National Park and adjacent Lincoln National Forest are relatively well protected from major modification or destruction of habitat. The administration of Guadalupe National Park recognizes the fragile nature of the park's plant and animal communities (U.S. Department of Interior, 1973) and has implemented some protective management strategies. Moreover, a U.S. House of Representatives committee report recommended that there be close cooperation between the Forest Service and the National Park Service in preserving the environmental resources of the North McKittrick Canyon and other canyons in the Lincoln National Forest (U.S. Department of Interior, 1973). Yet, the populations of *H. apiculatum* are potentially threatened. Existing trails allow access to most of the localities of *H. apiculatum* and as trail users increase there is the danger of destruction of the local habitat. The plants are easily dislodged and the cummulative impact of hikers leaving the trail and climbing over the ledges and boulders that support colonies of *H. apiculatum* could be devastating to the small and slowly reproducing populations. Moreover, the showy and distinctive plants of *H. apiculatum* are highly visible from the trails and could be subject to increasing pressures from taking.

A number of new trail alignments are planned within the range of *H. apiculatum.* these do not appear to threaten the known localities and may actually reduce visitor pressure in some areas. However, Guadalupe National Park is a relatively new park and in all likelihood will attract an increasing number of visitors in the years ahead. During 1979 the park experienced approximately 29,000 backcountry user days compared to 26,258 user days in 1978. Trail counts of hikers into the South McKittrick biological area, a locality of *H. apiculatum,* totaled 323 in 1978 and more than 520 in 1979. Future increases, as well as the contruction of additional trails, shelters or camping areas to accomodate them, could potentially threaten the survival of *H. apiculatum.*

Dr. Robert Irving, a botanist at the University of Nebraska at Omaha, has noted that some small populations in the South McKittrick fork have disappeared since the late 1960's. This could be due to human disturbance, flooding or a combination of both threats.

The population on private ranch land could potentially be threatened by increased grazing or major changes in land use.

1. *Overutilization for commercial, sporting, scientific or educational purposes.* Although no evidence exists, there is the potential of taking this

showing species for cultivation in rock gardens or for other purposes.

2. *Disease or predation (including grazing).* Grazing has occurred on the privately.owned site for this species. This grazing does not appear to threaten the species.

3. *Inadequacy of existing regulatory mechanisms. Hedeoma apiculatum* is not protected by State law. Existing Federal Regualtions in 36 CFR 2.25 and 36 CFR 261.9 prohibit takings of this species in the Lincoln National Forest and the Guadalupe Mountains National Park, however, these regulations are difficult to enforce in a comprehensive fashion. guadalupe Mountains National Park recognizes the fragile nature of this plant and its habitat and has implemented some protective management strategies. The endangered Species Act will offer added protection for the species.

4. *Other natural or manmade factors affecting its continued existence.* Any human pressure on this species may exaggerate the possibility of small populations going extinct through natural population fluctuations. The restricted distribution of *Hedeoma apiculatum* and the small numbers of known individuals will intensify any adverse impacts. In addition to man-induced threats, field work between 1966 and 1979 indicates that periodic and severe floods can reduce the populations of *H. apiculatum* in streambeds. Any potential disturbance is likely to have a severe impact on this species; reproductive potential is low and few young plants have been observed in the wild.

Critical Habitat

The Act defines "Critical Habitat" as (i) the specific areas within the geographical area occupied by the species, at the time it is listed in accordance with the provisions of Section 4 of this Act, on which are found those physical or biological features (I) essential to the conservation of the species and (II) which may require special management considerations or protection; and (ii) specific areas outside the geographic area occupied by the species at the time it is listed in accordance with the provisions of section 4 of this Act, upon a determination by the Secretary that such areas are essential for the conservation of the species.

Subsection 4(f)(4) of the Act requires, to the maximum extent practicable that any proposal to determine Critical Habitat be accompanied by a brief description and evaluation of those activities which, in the opinion of the Secretary, may adversely modify such habitat if undertaken, or may be impacted by such designation.

Any activity which would result in increased trampling or disturbance of the fragile substrate where *Hedeoma apiculatum* occurs would probably adversely modify the Critical Habitat. The long term solution on how to best protect *Hedeoma apiculatum* may be to greatly reduce the human traffic in the area where this plant occurs. In this respect, Critical Habitat designation may effect Federal activities by prohibiting the development of new trails in areas where the plant occurs, relocating old trails, or other steps by the National Park Service and the Forest Service to protect this species.

Critical Habitat for *Hedeoma apiculatum* is being determined to include the three areas in Texas where the three largest and best known populations of this species occur. Critical Habitat is not being proposed for the smallest population in Guadalupe Mountains National Park, the population in Lincoln National Forest or for the population located on private land. These three populations were not included in Critical Habitat at this time because they are very small populations which are not well studied or understood at the present, in contrast to the three larger populations which are being proposed as Critical Habitat. These populations maybe proposed as Critical Habitat when they are better known. Therefore, the Critical Habitat delineated does not necessarily include the entire area necessary for the survival of *Hedeoma apiculatum* throughout its range, and modifications of this Critical Habitat may be proposed in the future.

The Endangered Species Act Amendments of 1978 added the following provision to subsection 4(a)(1) of the Endangered Species Act of 1973:

At the time any such regulations (to determine whether a species is endangered or threatened) is proposed, the Secretary shall also by regualtion, to the maximum extent prudent, specify any habitat of such species which is then considered to be Critical Habitat.

In addition, the section 4 regulations of February 27, 1980, (45 FR 13007–13026) state that:

> If the Director determines that the designation of Critical Habitat is not prudent, he will state the reasons for such determination in the proposed and final rules listing a species.

There are fewer than 10 individuals in the population at Pine Top in Guadalupe Mountains National Park. The population in Lincoln National Forest is located on a fragile talus slope which could be destabilized by foot traffic. If the exact locality of these populations were published in the Federal Register and in local newspapers, *Hedeoma apiculatum* might be additionally threatened by taking and vandalism. The population in Eddy County, New Mexico, is located on private property and is afforded no current Federal protection. Section 9 of the Endangered Species Act does not restrict the taking of Endangered or Threatened plants and publication of Critical Habitat maps may make these populations more vulnerable. After management and recovery plans have been developed for this plant and after these populations are better known, Critical Habitat may be beneficial and may also be proposed for these three additional populations.

Subsection 4(b)(4) of the Act requires the Service to consider economic and other impacts of specifying a particular area as Critical Habitat. The Service has prepared a draft impact analysis and believes that economic and other impacts of this action are not significant in the foreseeable future. As previously stated, only minimal impacts upon the National Park Service and the Forest Service are expected. The Fish and Wildlife Service has notified and is working with the U.S. Forest Service and the National Service, the two agencies which have jurisdiction over the land and water under consideration in this proposed action. The U.S. Forest Service, National Park Service, other Federal agencies, and other interesed or organizations were requested to submit information on economic or other impacts of the proposed action and this information was utilized in completing this analysis. The Service will prepare a final impact analysis prior to the time of final rulemaking. The Service's draft economic impact analysis was used as part of the bais for the Service's decision as to whether or not to exclude any areas from Critical Habitat for *Hedeoma apiculatum.*

Effects of this Proposal

In addition to the effects discussed above, the effects of this proposal would include, but would not necessarily be limited to, those mentioned below.

Subsection 7(a) of the Act, as amended, requires Federal agencies to evaluate their actions with respect to any species which is proposed or listed as Endangered or Threatened. This proposed rule requires Federal agencies to satisfy their statutory obligations with respect to this species, that is, as a proposed Threatened Species, agencies are required under section 7(a)(3) to confer with the Service on any action that is likely to jeopardize the species. If

published as a final rule, this action would require Federal agencies to insure that activities they authorize, fund or carry out are not likely to jeopardize the continued existence of this species, and to insure that their actions are not likely to result in the destruction or adverse modification of its Critical Habitat which has been determined by the Secretary.

The Act and implementing regulations published in the June 24, 1977, Federal Register set forth a series of general trade prohibitions and exceptions which apply to all endangered plant species. All of those prohibitions and exceptions also apply to any Threatened plant species, excluding seeds of cultivated plants treated as Threatened, unless a special rule pertaining to that Threatened species has been published and indicates otherwise. The regulations which pertain to Threatened plants are found at 50 CFR 17.71 and are summarized below.

With respect to *Hedoeoma apiculatum* all prohibitions of section 9(a)(2) of the Act, as implemented by 50 CFR 17.71, would apply except for certain exemptions with respect to seeds. These prohibitions, in part, would make it illegal for any persons subject to the jurisdiction of the United States to import or export, transport in interstate of foreign commerce in the course of a commercial activity, or sell or offer for sale this species in interstate or foreign commerce. Certain exceptions would apply to agents of the Service and State conservation agencies. The Act of 50 CFR 17.72 also provides for the issuance of permits to carry out otherwise prohibited activities involving Threatened species, under certain circumstances.

If listed as Threatened under the Act, the Service will review this species to determine whether it shoudl be considered for the Convention on Nature Protection and Wildlife Preservation in the Western Hemisphere for placement upon its Annex, and whether it should be considered for other appropriate international agreements.

Public Comments Solicited

The Director intends that the rule finally adopted will be as accurate and effective as possible in the conservation of any Endangered or Threatened species. Therefore, any comments or suggestions from the public, other concerned governmental agencies, the scientific community, industry, private interests, or any other interested party concerning any aspect of these proposed rules are hereby solicited. Comments particularly are sought concerning:

1. Biological or other relevant data concerning any threat (or the lack thereof) to the species included in this proposal.
2. The location of any other populations of *Hedeoma apiculatum* and the reasons why any habitat of this species should or should not be deermined to by Critical Habitat as provided for by the Act.
3. Additional information concerning the range and distribution of this species.
4. Current or planned activities in the subject and the probable impacts of such activities on the area designated as Critical Habitat.
5. The foreseeable economic and other impacts of the Critical Habitat designation on Federal activities.

Final promulgation of this rule on *Hedeoma apiculatum* will take into consideration the comments and any additional informaation received by the Director, and such communications may lead him to adopt a final rule that differs from this proposal.

Public Meeting

The Service hereby announces that a public meeting will be held on this proposed rule. The public in invited to attend this meeting and to present opinions and information on this proposed rule. Specific information to the public meeting is set out below:

Place: Carlsbad Public Library, Halaqueno Park, Carlsbad, New Mexico.
Date: August 27, 1980.
Time: 7:00 p.m.
Subject: Threatened Status, for *Hedeoma apiculatum.*

National Environmental Policy Act

A draft environmental assessment has been prepared in conjunction with this proposal. It is on file in the Service's Office of Endangered Species, 1000 North Glebe Road, Arlington, Virginia, and may be examined by appointment during regular business hours. A determination will be made at the time of final rule whether this is a major Federal action which would significantly affect the quality of the human environment within the meaning of Section 102(2)(C) of the National Envrionmental Policy Act of 1969 (40 CFR Parts 1500–1508).

This proposal is being published under the authority contained in the endangered Species Act of 1973, as amended (16 U.S.C. 1531 *et seq.;* 87 Stat. 884, 92 Stat. 3751, 93 Stat. 1225). The authors of this proposed rule are Barry S. Mulder and Ms. Rosemary Carey, Washington Office of Endangered Species (703–235–2760). Dr. Robert s. Irving, University of Nebraska, Omaha, Nebraska, prepared the status report on this species.

References Cited

Brown, D. E. and C. H. Lowe, 1977. Map, Biotic communities of the Southwest (scale 1; 1,000,000). Rocky Mountain Forest and Range Exp., Sta U.S.D.A. Forest Service.

Irving, R. S. In Press. Systematics of *hedeoma* (Labiatae). SIDA

Risking, D. 1974. Report submitted to the National Park Service: The Rare and Endangered flora of Guadalupe Mountains National Park, Texas.

U.S. Department of Agriculture, Soil Conservation Service. 1974. General Soil Map, Culberson Co., Texas.

U.S. Department of the Interior, National Park Service. 1973. Master Plan, Guadalupe Mountains National Park, Texas.

Regulations Promulgation

Accordingly, it is hereby proposed to amend Part 17, Subchapter B of Chapter I, Title 50 of the Code of Federal Regulations, as set forth below:

1. It is proposed to amend § 17.12 by adding, in alphabetical order, the following to the list of plants:

§ 17.12 Endangered and threatened plants.

Species		Historic range	Status	When listed	Critical habitat	Special rules
Scientific name	Common name					
Labiatae-Mint family:						
Hedeoma apiculatum	McKittrick pennyroyal.	U.S.A. (TX, NM)	T	.....	17.96(a)	NA

2. Also, the Service proposes to amend 17.96(a) by adding the Critical Habitat of *Hedeoma apiculatum* after that of the Erysimum capitatum var. angustatum (Contra Costa wallflower) as follows:

Species

Hedeoma apiculatum

McKittrick Pennyroyal

Texas, Culberson County; 3 areas in Guadalupe Mountains National Park; 85 acres in Devil's Den Canyon; 60 acres above Turtle Rock on McKittrick Ridge and 180 acres in South McKittrick Canyon.

1. Devil's Den Canyon: from the 5,400 foot contour on the canyon floor (1.1 KM n.w. of Pratt Lodge) and along the sides of the canyon south-westward following the 6,000' contour on the north side of the canyon (beginning at Texas coordinates 19,892 m E., 39,169 m N.) and the 6,200' contour on the south side (beginning at Texas coordinates 19,699 m E., 38,651 m N.) to approximately the 6,000' elevation point of the canyon floor.

2. Above Turtle Rock on McKittrick Ridge: high ridge surrounding unnamed peak 2.65 km southwest of Pratt Lodge and located 19,073 m E., 36,439 m N. on the Texas coordinate system. The boundaries defined approximately by the 6,800' contour on the southeast, southwest, and northeast and by the 7,400' contour on the northeast. The 7,400' contour connected to the 6,800' contour by a line passing through Texas coordinates 18,699 m E., 36,530 m N., and 18,781 m E., 36,854 m N. on the southwest and coordinates 19,145 m E., 36,819 m N., and 19,000 m E., 36,952 m N. on the northeast.

3. South McKittrick Canyon: from the 5,400' on the canyon floor (2.2 km southwest of Pratt Lodge) and along the sides of the canyon southwesterly following the 5,800' contour on the northside of the canyon (beginning at Texas coordinates 20,169 m E., 36,434 m N.) and the 6,200' contour on the south side of the canyon (beginning at Texas coordinates 20,289 m E., 36,121 m N.) to the 5,800' elevation point of the canyon floor.

McKittrick Pennyroyal

Culberson, Texas

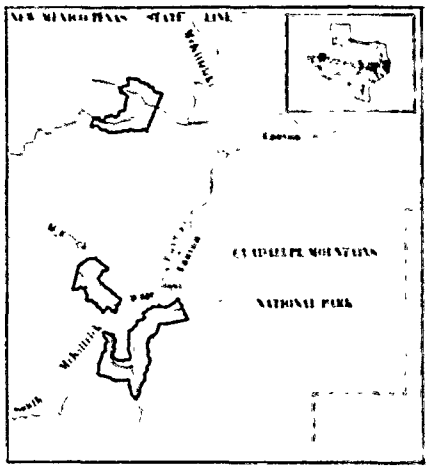

Dated: August 12, 1980.

Lynn A. Greenwalt,

Director, Fish and Wildlife Service.

[FR Doc. 80-24[illegible]20 Filed 8-14-80; 8:45 am]

BILLING CODE 4310-55-M

50 CFR Part 17

Endangered and Threatened Wildlife and Plants; Notice of Review of 18 Species of Foreign Reptiles

AGENCY: Fish and Wildlife Service, Interior.

ACTION: Notice of review.

SUMMARY: Notice is hereby given that the U.S. Fish and Wildlife Service has evidence on hand to warrant a review of the status of 18 species of foreign reptiles to determine whether they should be proposed for listing as Endangered or Threatened species under provisions of the Endangered Species Act of 1973, as amended. The common and scientific names, and ranges, are provided in the table below. The threats which are believed to be causing declines of these species are: habitat destruction, the introduction of non native predators, exploitation as a source of human food (mainly local), and overcollection; these threats are briefly discussed below.

DATES: Comments and materials relating to the status of these species should be submitted by November 13, 1980.

ADDRESSES: Interested persons or organizations are requested to submit comments to Director (OES), U.S. Fish and Wildlife Service, Department of the Interior, Washingtong, D.C. 20240.

FOR FURTHER INFORMATION CONTACT: Mr. John L. Spinks, Jr. Chief, Office of Endangered Species, U.S. Fish and Wildlife Service, Washington, D.C. 20240 (703/235-2771).

SUPPLEMENTARY INFORMATION:

Background

The species which are included in this notice of review are:

Common name	Scientific name	Range
Serpent Island gecko	*Cyrtodactylus serpensinsula*	Mauritius.
Acklins ground iguana	*Cyclura nigra nuchalis*	Bahamas.
Allen's Cay iguana	*Cyclura cychlura inornata*	Bahamas.
Andros Island ground iguana	*Cyclura cychlura cychlura*	Bahamas.
Cuban ground iguana	*Cyclura nubila*	Cuba, Cayman Islands.
Exuma Island iguana	*Cyclura cychlura figginsi*	Bahamas.
Jamaican iguana	*Cyclura collei*	Jamaica.
Mayaguana iguana	*Cyclura carinata bartschi*	Bahamas.
Turks and Caicos iguana	*Cyclura carinata carinata*	Turks and Caicos Islands.
Watling Island ground iguana	*Cyclura nigra nigra*	Bahamas.
White Cay ground iguana	*Cyclura nigra cristata*	Bahamas.
Gray's monitor lizard	*Varanus grayi*	Philippines.
Hierro giant lizard	*Gallotia simonyi*	Canary Islands.
Aruba island rattlesnake	*Crotalus unicolor*	Venezuela.
Asiatic box turtle	*Cuora trifasciata*	Hong Kong, People's Republic of China.
Central American river turtle	*Dermatemys mawei*	Belize, Mexico, Guatemala.
Chinese big-headed turtle	*Platysternon megacephalum*	Hong Kong, People's Republic of China.
Lar Valley Viper	*Vipera latifi*	Iran.

A brief description of these species and their problems is as follows:

Serpent Island gecko: This lizard is restricted to Round Island where it is rare and Serpent Island where it is considered very rare; both islands are near Mauritius. Predation from feral animals and habitat destruction are the chief causes of its decline (Honegger, 1979).

Bahama species of Cyclura: All these species are listed in the International Union for the Conservation of Nature and Natural Resources (IUCN) Red Data Book as being of concern (Honegger, 1979). The main threats to their continued survival include habitat destruction for resort development and the introduction of feral animals, particularly mongooses and dogs, which prey upon the iguanas, especially the young and juveniles, and destroy nests. Introduced goats may compete for food (these species are vegetarian) and humans kill them for food or malicious "sport". Nearly all these iguanas have very small ranges; many are limited to a single island. Discussions of the threats to these species are contained in Honegger (1979), Carey (1975), and Auffenberg (1975, 1976a).

Cuban ground iguana: This species occurs on Cuba and Isla de Pinos and in the Cayman Islands. There are 3 subspecies: *C.n. caymanensis* (only one colony on Cyaman Brac), *C.n. lewisi* (less than 50 individuals on Grand Cayman Island, and *C.n. nubila* in Cuba and adjacent islands and cays. The threats to these iguanas are similar to those of the Bahama *Cyclura* (Honegger, 1979).

Turks and Caicos Iguana: The same threats which apply to the Bahama *Cyclura* also apparently apply to this species (Honegger, 1979). It is found on most of the islands in the Turks and Caicos group.

Jamaican iguana: The following is taken from Woodley (1980) who has reviewed the history and status of this species:

> For a hundred years, they were only known to survive on the Goat Islands but, after the introduction of the mongoose and the interference consequent on the Second World War, that population became extinct in about 1948. But iguanas had, after all, survived on the mainland; in the Hellshire Hills. Hog-hunters have been catching occasional specimens up to 1978 and one of these, killed in 1969, was obtained by the author and positively identified. It is unlikely that the Jamaican Iguana, already very rare, will survive the proposed development of the Hellshire Hills.

Gray's monitor lizard: The following is from Auffenberg (1979a) who has reviewed the history and status of this species:

> Until 1976 Gray's monitor lizard was known to science only by two museum specimens, neither of which gave any data more precise than "Luzon". In 1975 the author discovered a third which identified an area on Luzon, and in 1976 he went to the Philippines and found this large monitor, which some scientists had thought might be extinct, widely distributed in forests in southern Luzon. But large areas of these forests have been and continue to be destroyed, and with them go the monitor's habitat. Also local people hunt it for meat. The author discusses the ecology and distribution of the monitor and urges that a new national park be created.

Additional information on this lizard may be found in Auffenberg (1979b, 1976b).

Hierro giant lizard: This species is known only from the Canary islands (Hierro Island; extinct on Salmor Rock). Not more than 50 individuals are believed to remain. Predation and overcollection by scientists have been implicated in its decline (Honegger, 1978). In addition, a stone breaking plant had been proposed near the last known population (in 1979).

Aruba island rattlesnake: According to Honegger (1979), the habitat of this rattlesnake is shrinking as a result of increasing human activity. Collection may also be contributing to its decline.

Asiatic box turtle and Chinese big-headed turtle: These species are consumed in China where they are believed to enhance sexual performance; prices in Hong Kong markets may reach U.S. $100 for a large specimen. Habitat destruction may be impacting these species in the People's Republic of China (information supplied by Mr. George R. Campbell).

Lar Valley viper: Andren and Nilson (1979) have reviewed the biology of this species and state:

> *Vipera latifii* Mertens, Darevsky & Klemmer, a recently described viper from northern Iran, is in severe need of conservation. Its range is restricted to unique, alpine Lar Valley, which in a few years will be used as a huge water reservoir. Observations on the biology of *Vipera latifii* are given. Sympatric amphibians and reptiles show ecotypic adaptations.

Central American river turtle: This large river turtle is found only in the coastal lowlands of southern Mexico, northern Guatemala, and Belize. It is hunted extensively for its meat and has been seriously depleted throughout much of its range. According to Alvarez del Toro et al. (1979), this exploitation could lead to its extinction. Additional information on its biology is contained in Smith and Smith (1979) and Iverson and Mittermeier (1980).

Because of the information outlined above, the U.S. Fish and Wildlife Service believes that there are sufficient data to conduct a review of the status of these foreign reptiles to determine whether protection under provisions of the Endangered Species Act of 1973, as amended, may be warranted. The Service is therefore soliciting any additional information, reports, or published literature which may aid in this decision.

This notice of review was prepared by Dr. C. Kenneth Dodd, Jr., Office of Endangered Species (703/235-1975).

Literature Cited

Alvarez del Toro, M., R. A. Mittermeier, and J. B. Iverson. 1979. River turtle in danger. Oryx, Nov. pp. 170-173.

Andren, C. and G. Nilson. 1979. *Vipera latifii* (Reptilia, Serpentes, Viperidae) an Endangered viper from Lar Valley, Iran, and remarks on the sympatric herpetofauna. J. Herpetol. 13:335-341.

Auffenberg, W. 1975. The dragon isles: West Indian rock iguanas. Bahamas Nat. 1(1): 2-7.

Auffenberg, W. 1976a. Bahamas rock iguanas, part two. Bahamas Nat. 2(1): 9-16.

Auffenberg, W. 1976b. First description of an adult *Varanus grayi*. Copeia 1976: 586-588.

Auffenberg, W. 1979a. A monitor lizard in the Philippines. Oryx, June pp. 39-46.

Auffenberg, W. 1979b. Research on monitor lizards. Tigerpaper 4(4):20-21.

Carey, M. 1975. Iguanas on the rocks. Animal Kingdom 78(2):15-20.

Honegger, R. E. 1978. Threatened amphibians and reptiles in Europe. Council of Europe, Nature and Environment Ser. No. 15, p. 79.

Honegger, R. E. (ed) 1979. Amphibia and Reptilia. IUCN Red Datas Book, Vol. 3, Morges, Switzerland.

Iverson, J. B. and R. A. Mittermeir. 1980. *Dermatemys mawei*. Cat. Amer. Amphib. Rept. 237.1-237.4.

Smith, H. B. and R. B. Smith. 1979. Synopsis of the herpetofauna of Mexico. Volume VI. Guide to Mexican turtles, Bibliographic addendum III. John Johnson Publ., N. Bennington, Vt.

Woodley, J. D. 1980. Survival of the Jamaican iguana, *Cyclura collei*. J. Herpetol. 14;45-49.

Dated: August 4, 1980.

Robert S. Cook,

Acting Director, Fish and Wildlife Service.

[FR Doc. 80-24722 Filed 8-14-80; 8:45 am]

BILLING CODE 4310-55-M

federal register

Friday
August 15, 1980

Part VIII

Department of Energy

Economic Regulatory Administration

Mandatory Petroleum Price Regulations; Tertiary Incentive Program; Proposed Changes and Public Hearing

DEPARTMENT OF ENERGY

Economic Regulatory Administration

10 CFR Part 212

[Docket No. ERA-R-80-25]

Mandatory Petroleum Price Regulations; Amendments to Tertiary Incentive Program

AGENCY: Economic Regulatory Administration, Department of Energy.

ACTION: Notice of proposed rulemaking and public hearing.

SUMMARY: The Economic Regulatory Administration (ERA) of the Department of Energy (DOE) is proposing several changes to the Tertiary Incentive Program ("incentive program") set forth at 10 CFR 212.78 of the Mandatory Petroleum Price Regulations. One proposal would change the definition of "recoupable allowed expenses" to permit recovery of "inhouse" expenses otherwise allowed by the regulation so long as such expenses do not exceed the price that would have been paid in an arm's-length transaction. Currently, expenses are recoverable only if they are incurred in an arm's-length transaction and for fair market value. Another proposal would require producers to report "prepaid expenses." A third proposal would revise the requirement that producers submit an annual opinion concerning the accuracy of their monthly producer and project reports. The final proposal would exclude injected hydrocarbons as an allowed expense for miscible fluid flooding projects.

DATES: Comments by October 10, 1980, 4:30 p.m.; Requests to speak at hearing by September 9, 1980, 4:30 p.m.; Hearing date: September 16, 1980, 9:30 a.m.

ADDRESSES: All comments to Office of Public Hearings Management, Economic Regulatory Administration, Room B-210, Docket No. ERA-R-80-25, 2000 M Street, N.W., Washington, D.C. 20461. Requests to speak to Economic Regulatory Administration, Office of Public Hearings Management, Room B-210, Docket No. ERA-R-80-25, 2000 M Street, N.W., Washington, D.C. 20461, Attn: Karene Walker.

Hearing Location: Room 2105, 2000 M Street, N.W., Washington, D.C.

FOR FURTHER INFORMATION CONTACT:

Cynthia Ford (Office of Public Hearings Management, Economic Regulatory Administration, Room B-210, 2000 M Street, N.W., Washington, D.C. 20461, (202-653-3974

William L. Webb (Office of Public Information), Room B-110, 2000 M Street, N.W., Washingon, D.C. 20461, (202) 653-4055

Douglas Harnish (Office of Regulations and Emergency Planning), Economic Regulatory Administration, Room 7302-G, 2000 M Street, N.W., Washington, D.C. 20461, (202) 653-3202

Eugene Glass (Office of Petroleum Operations), Economic Regulatory Administration, Room 6128, 2000 M Street, N.W., Washington, D.C. 20461, (202) 653-3379

Ira Mayfield (Resource Applications) Department of Energy, Room 3334, 12th & Pennsylvania Avenue, N.W., Washington, D.C. 20461, (202) 633-8395

Ben McRae (Office of General Counsel), Department of Energy, Room 6A-127, 1000 Independence avenue, S.W., Washington, D.C. 20585, (202) 252-6739

SUPPLEMENTARY INFORMATION:

I. *Introduction*
II. *Proposals*
A. *In-House Expenses*
B. *Prepaid Expenses*
C. *Annual CPA Opinion*
D. *Injected Hydrocarbons*
III. *Comment Procedures*
IV. *Procedural Requirements*

I. Introduction

On August 21, 1979, we amended 10 CFR 212.78 to establish the incentive program under which producers presently can recover some of the cost they incur as a result of their participation in enhanced oil recovery ("EOR") projects, (44 FR 51148, August 30, 1979) This program permits producers to sell at market prices crude oil that would otherwise be subject to lower tier or upper tier ceiling price limitations. However, the "tertiary incentive revenue" (that is, the additional revenue that results from selling crude oil at the market price) from such sales may not exceed seventy-five percent of the money that a producer has spent on certain expenses associated with EOR projects.

We recently adopted a number of changes to the incentive program. On June 6 we issued a final rule to exclude from the calculation of a producer's tertiary incentive revenue the amount of windfall profit tax attributable to the additional revenue that a producer receives as a result in the incentive program. (45 FR 40106, June 13, 1980) In the preamble to that rule we also discussed the issue of "prepaid expenses", that is, expenses for goods or services which will not be used in connection with an EOR project until sometime after payment is made. In a final rule issued July 7, 1980, we simplified the reporting requirements with respect to qualified producers that have an interest in only one EOR project and recover their recoupable allowed expenses only from sales of crude oil produced from the property on which that EOR project is located. (45 FR 47622, July 15, 1980)

In this rulemaking, we are proposing to modify several of the limitations that apply to the recovery of allowed expenses. We recognize that today's proposals, along with the recent amendments discussed above, may cause some producers to conclude that the incentive program will be subject to frequent change and further limitation. We also recognize that there must be a relatively high degree of certainty in the incentive program to encourage the type of commitment necessary for EOR projects. We wish to assure producers that they can rely on the basic framework of the incentive program and that we do not intend to propose further changes to the program. In this regard, we do not view the proposals discussed below as major revisions or limitations of the incentive program.

II. Proposals

A. *In-House Expenses.* The current definition of recoupable allowed expenses provides that a producer must incur an expense in an arm's-length transaction and for fair market value in order to recover that expense under the incentive program. The purposes behind these requiements were to prevent the recovery of artifically inflated expenses and to facilitate the auditing of EOR projects. We understand, however, that frequently it is more efficient and economical for the producer to use "in-house" goods and services (that is, goods and services provided from within the firm) rather than obtaining such goods and services from outside sources. Thus, the arms-length transaction requirement may actually be working to increase the amount of expenses that a producer recovers under the program.

We have reviewed this aspect of the incentive program and have determined that a producer should be permitted to recover the cost of an "in-house" good or service if that cost is no greater than the price that the producer would pay an outside source for the same good or service. Accordingly, we are proposing to amend the definition of recoupable allowed expenses to permit the recovery of such "in-house" costs. We also are proposing to delete the reference to fair market value since we believe this concept to be an integral part of an arm's-length transaction. To ensure that this proposed modification does not unduly complicate our auditing efforts, we also are proposing to amend the

incentive program's reporting and recordkeeping requirements to require the identificaion of any "in-house" expenses and the maintenance of records as to what the price of the good or service associated with that expense would have been in an arms-length transaction.

B. *Prepaid Expenses.* In the preamble to the June 6 final rule we stated that the incentive program does not prohibit the recovery of prepaid expenses. At the same time, however, we noted that use of a good or service in connection with an EOR project is a condition subsequent to the recovery of its expense. To have effective enforcement of this condition we need to have a general overview of a producer's situation with respect to prepaid expenses. Accordingly, we are proposing that a producer file an annual report concerning its prepaid expenses.

This annual prepaid expenses report would require a producer to identify which of the allowed expenses that it reported previously in the monthly producer report, were prepaid. For purposes of this report, prepaid expenses would be defined as the expenses for any injectant or fuel which is used after September 30, 1981, the expenses for any item for which federal tax deduction (including depreciation) would be properly allocable to the period after September 30, 1981, or the expenses (in the aggregate) for all other items that are to be used after September 30, 1981. We are proposing this definition of prepaid expenses since it is essentially the same as the definition of prepaid expenses for purposes of the Windfall Profit Tax and, thus, should reduce the administrative burden on producers that must comply with the requirements of both the incentive program and the Windfall Profit Tax. A producer also would be required to identify any good or service for which it reported a prepaid expense, the date on which it intended to use that good or service, and the date on which it actually used that good or service. We specifically request comments on the appropriateness of the proposed definition of, and the level of reporting on, prepaid expenses. A producer would continue to file these annual reports until it had reported the actual use of all the goods or services for which it had reported prepaid expenses. In addition, the producer would be required to maintain a copy of the contract for, or documentary proof of the purchase of, any goods or services for which it had reported prepaid expenses.

C. *Annual CPA Opinions.* The incentive program requires annual opinions by certified public accountants concerning the accuracy of the monthly producer and project reports. These opinions currently must be submitted by January 31 of each year. We have been informed that in many instances it will be impossible for a certified public accountant to issue such an opinion by January 31 due to the timing of the audit for a particular producer or project. Accordingly, we are proposing to require the submission of the annual CPA opinions within 120 days of the close of the fiscal year for the producer or project to which it relates.

D. *Injected Hydrocarbons.* Currently, the incentive program does not prohibit a producer engaged in a miscible fluid flooding project from recovering as an allowed expense the cost of injected hydrocarbons, such as natural gas and liquefied petroleum gases. We do not believe that injected hydrocarbons should be an allowed expense since the producer usually can recover the cost therefor by recovering the injected hydrocarbons from the oil bearing formation and selling them. Accordingly, we are proposing to amend the Appendix to § 212.78 to exclude injected hydrocarbons from the allowed expenses for miscible-fluid flooding projects. This change would be applicable to any expenses incurred or paid on or after the issusance of this notice. Of course, a producer still could request an order from ERA designating injected hydrocargons as an additional allowed expense pursuant to § 212.78(e)(3).

III. Comment Procedures

A. *Written Comments.* You are invited to participate in this proceeding by submitting data, views or arguments with respect to the proposals set forth in this notice of proposed rulemaking. Comments should be submitted by 4:30 p.m., October 10, 1980, to the address indicated in the "Addresses" section of this notice and should be identified on the outside envelope and on the document with the docket number and the designation: "Amendments to the Incentive Program". Fifteen copies should be submitted. All comments received will be available for public inspection in the DOE Reading Room, GA-152, Forrestal Building, 1000 Independence Avenue, S.W., between the hours of 8:00 a.m. and 4:30 p.m., Monday through Friday.

Any information or data submitted which you consider to be confidential must be so identified and submitted in writing, one copy only. We reserve the right to determine the confidential status of such information or data and to treat it according to our determination.

B. *Public Hearings.* 1. *Procedure for Request to Make Oral Presentation.* The times and places for the hearings are indicated in the "Dates" and "Addresses" sections of this preamble. If necessary to present all testimony, a hearing will be continued to 9:30 a.m. of the next business day following the first day of the hearing.

If you have any interest in the proposals in this notice, or represent a group or class of persons that has an interest, you may make a written request for an opportunity to make oral presentation at a hearing by 4:30 p.m., September 9, 1980. You should be prepared to describe the interest concerned; if appropriate, to state why you are a proper representative of a group or class of persons that has such an interest; and to give a concise summary of the proposed oral presentation. You should also provide a phone number where you may be contacted through the day before the hearing.

If you are selected to be heard, you will be so notified before 4:30 p.m., September 12, 1980. You will be required to bring one hundred copies of your statement to the address indicated in the "Addresses" section of this preamble for requests to speak at the hearing concerned before 4:30 p.m. on the day before the hearing.

2. *Conduct of the Hearings.* We reserve the right to select the persons to be heard at the hearings, to schedule their respective presentations, and to establish the procedures governing the conduct of the hearings. The length of each presentation may be limited, based on the number of persons requesting to be heard.

An ERA official will be designated to preside at each of the hearings. They will not be judicial or evidentiary-type hearings. Questions may be asked only by those conducting the hearing, and there will be no cross-examination of persons presenting statements. At the conclusion of all initial oral statements, each person who has made an oral statement will be given the opportunity to make a rebuttal statement. The rebuttal statements will be given the order in which the initial statements were made and will be subject to time limitations.

You may submit questions to be asked of any peson making a statement at a hearing to the address indicated above for requests to speak at that hearing before 4:30 p.m. on the day before the hearing. If you wish to ask a question at a hearing, you may submit the question, in writing, to the presiding officer. The ERA or, if the question is submitted at a hearing, the presiding officer will

determine whether the question is relevant, and whether the time limitations permit it to be presented for answer.

Any further procedural rules needed for the proper conduct of a hearing will be announced by the presiding officer.

Transcript of the hearing will be made and the entire record of the hearing, including the transcript, will be retained by the ERA and made available for inspection at the DOE Freedom of Information Office, Room 5B-180, 1000 Independence Avenue SW., Washington, D.C., between the hours of 8:00 a.m. and 4:30 p.m., Monday through Friday. You may purchase a copy of the transcript of the hearing from the reporter.

IV. Procedural Requirements

A. *Section 404 of the DOE Act.* Pursuant to the requirements of Section 404(a) of the Department of Energy Organization Act (DOE Act, 42 U.S.C. 7101 *et seq.*, Pub. L. 95-91, as amended), we are referring this rule to the Federal Energy Regulatory Commission (FERC) for a determination as to whether the proposed rule would significantly affect any matter within the Commission's jurisdiction. The Commission has until the close of the public comment period to make that determination.

B. *Section 7 of the FEA Act.* Under section 7(a) of the Federal Energy Administration Act of 1974 (15 U.S.C. 785 *et seq.*, Pub. L. 93-275, as amended), the requirements of which remain in effect under section 501(a) of the DOE Act, the delegate of the Secretary of Energy shall, before promulgating proposed rules, regulations, or policies affecting the quality of the environment, provide a period of not less than five working days during which the Administrator of the Environmental Protection Agency (EPA) may provide written comments concerning the impact of such rules, regulations, or policies on the quality of the environment. Such comments shall be published together with publication of notice of the proposed action.

A copy of this notice was sent to the EPA Administrator. The EPA Administrator informed the ERA that he does not foresee as the result of the implementation of today's proposed actions an unfavorable impact on the quality of the environment as related to the duties and responsibilities of the EPA.

C. *Executive Order 12044.* Executive Order 12044 (43 FR 12661, March 23, 1978) and DOE's implementing procedures in DOE Order 2030 (44 FR 1032, January 3, 1979) require that a regulatory analysis be prepared for all significant regulations which are likely to have a major impact. We have determined that on the basis of the criteria set forth in these orders today's proposals will not have a major impact. Accordingly, no regulatory analysis has been proposed for these proposals.

(Emergency Petroleum Allocation Act of 1973, 15 U.S.C. 751 *et seq.*, Pub. L. 93-159, as amended, Pub. L. 93-511, Pub. L. 94-99, Pub. L. 94-133, Pub. L. 94-163, and Pub. L. 94-385; Federal Energy Administration Act of 1974, 15 U.S.C. 787 *et seq.*, Pub. L. 93-275, as amended, Pub. L. 94-332, Pub. L. 94-385, Pub. L. 95-70, and Pub. L. 95-91; Energy Policy and Conservation Act, 42 U.S.C. 6201 *et seq.*, Pub. L. 94-163, as amended, Pub. L. 94-385, and Pub. L. 95-70; Department of Energy Organization Act, 42 U.S.C. 7101 *et seq.*, Pub. L. 95-91; E.O. 11790, 39 FR 23185; E.O. 12009, 42 FR 46267.)

In consideration of the foregoing, Part 212 of Chapter II, Title 10 of the Code of Federal Regulations, is proposed to be amended as set forth below.

Issued in Washington, D.C., August 8, 1980.

Hazel R. Rollins,

Administrator, Economic Regulatory Administration.

§ 212.78 [Amended]

1. 10 CFR 212.78(c) is amended by revising the definition of "recoupable allowed expenses" to read as follows:

"Recoupable allowed expenses" means, with respect to a particular producer, the allowed expenses that are attributable to that producer; provided that such expenses are incurred in an arm's-length transaction or do not exceed the price that the producer would have paid in an arm's-length transaction and further provided that such expenses have been paid and reported pursuant to subsction (h) of this section.

2. 10 CFR 212.78(h)(1)(ii) is revised to read as follows:

* * * * *

(h)* * *

(1)* * *

(ii) *Annual CPA opinion.* Within 120 days of the close of each fiscal year that ends after December 31, 1980, of a particular qualified producer, such qualified producer shall submit to DOE an opinion by a certified public accountant attesting that during the course of his annual audit nothing has come to his attention that cause him to believe that the reports submitted by such qualified producer in accordance with subsection (h)(1)(i) of this section are inaccurate.

* * * * *

(h)* * *

(2)* * *

(ii) *Annual CPA opinion.* Within 120 days of the close of each fiscal year that ends after Dedember 31, 1980 for a particular prooject, the quaoified producers with respect to such project shall submit to DOE an opinion by a certrified public accountant attesting that during the course of his annual audit nothing has come to his attention that causes him to believe that the reports with respect to that project submitted during the prior calendar year in accordance with subsection (h)(2)(ii) of this section are inaccurate.

4. 10 CFR 212.78(h) is amended by the addition of a new subparagraph (5) to read as follows:

* * * * *

(h)* * *

(5)(i) *Annual prepaid expenses report.* By January 31 of each year after 1980, a qualified producer shall file with DOE a report in which the producer shall certify to DOE (A) which of the expenses that it had reported previously to DOE pursuant to subsction (h)(1)(i) of this section were prepaid expenses; (B) the goods or services for which it incurred and paid such prepaid expenses; (C) the dates on which it intends to use goods or services; and (D) the dates on which it actually uses such goods or services. A producer shall file an annual prepaid expenses report each year until it has reported that it has actually used all the goods and services for which it incurred and paid a prepaid expense. For purposes of this subsection, a prepaid expense is (—) an expense for any injectant or fuel used after September 30, 1981, (2) an expense for any item for which IRS would allocate the deductions (including depreceiation) to the period after September 30, 1981, or (3) the expenses (in the aggregate) for all other items that are to be used after September 30, 1981.

(ii) *Recordkeeping requirements.* A qualified producer must maintain records that contain a copy of any contract for, or documentary evidence of the purchase of, any good or service for which the producer has reported a prepaid expense.

5. 10 CFR 212.78(h) is amended by the addition of a new subparagraph (6) to read:

* * * * *

(h) * * *

(6) *In-house expenses.* In complying with the reporting requirements of

subsections (h)(1)(i) and (h)(2)(i) of this section, a qualified producer shall indicate whether an expense is incurred in an arm's-length transaction. If an expense is not incurred in an arm's-length transaction, the producer must prepare and maintain records that contain information concerning what the price of the good or service associated with that expense would have been in an arm's-lenth transaction and the basis for that information.

6. Paragraph 4.a of the Appendix to 10 CFR 212.78 is revised to read:

4. *Miscible Fluid Flooding.*—a. The costs of injected fluids (excluding hydrocarbons) and additives for use at the project site.

[FR Doc. 80-24753 Filed 8-14-80; 8:45 am]
BILLING CODE 6450-01-M

federal register

Friday
August 15, 1980

Part IX

Department of Energy

Economic Regulatory Administration

Maximum Lawful Selling Price for Unleaded Gasoline; Further Notice of Proposed Rulemaking and Public Hearing

DEPARTMENT OF ENERGY

Economic Regulatory Administration

10 CFR Part 212

[Docket No. ERA-R-80-26]

Maximum Lawful Selling Price for Unleaded Gasoline

AGENCY: Economic Regulatory Administration, Department of Energy.

ACTION: Further notice of proposed rulemaking and public hearing.

SUMMARY: The Economic Regulatory Administration (ERA) of the Department of Energy (DOE) proposes alternative amendments and a public hearing regarding several methods for imputing the May 15, 1973 selling price for unleaded gasoline. Specifically, DOE propose a uniform imputed selling price for 87 octane (R+M)/2 unleaded gasoline. In addition, DOE proposes several alternative methods of pricing unleaded gasoline with higher than 87 octane (R+M)/2. One proposal is to allow refiners to treat all grades of gasoline as separate product categories and, therefore, allocate increased costs between the grades as the refiner deems appropriate. Another proposal is to allow an octane adjustment for octane higher than 87 octane (R+M)/2.

Finally, a technical amendment, to the unleaded gasoline production incentive is proposed.

DATES: Written comments due October 14, 1980.

Hearing dates: Los Angeles, California, September 5, 1980; Washington, D.C., September 11, 1980.

Requests to speak by 4:30 p.m., August 29, 1980, for Los Angeles hearing; September 3, 1980, for Washington, D.C. hearing.

ADDRESSES: All comments and requests to speak at the Washington, D.C. hearing should be submitted to the Economic Regulatory Administration, Office of Public Hearing Management, Docket No. ERA-R-80-26, Department of Energy, Room 2313, 2000 "M" Street, NW, Washington, D.C. 20461, (202) 653-3751.

Requests to speak at Los Angeles hearing to Terry Osborn, 333 Market Street, Region IX, San Francisco, California 94105, (415) 764-7027.

Hearing locations: Los Angeles hearing: Los Angeles, Convention Center, 1201 South Figueroa Street, Room 202, Los Angeles, California 90015; Washington, D.C. hearing: Room 2105, 2000 "M" Street, NW, Washington, D.C. 20461.

FOR FURTHER INFORMATION CONTACT:

William Webb (Office of Public Information), Economic Regulatory Administration, Room B-110, 2000 M Street, NW., Washington, D.C. 20461, (202) 653-4055.

Lorraine Hall (Public Hearings Office), Economic Regulatory Administration, Room B-210, 2000 M Street, NW., Washington, D.C. 20461, (202) 653-3971.

Chuck Boehl (Office of Regulations and Emergency Planning), Economic Regulatory Administration, Room 7108, 2000 M Street, NW., Washington, D.C. 20461, (202) 653-3220.

William Mayo Lee or William Funk (Office of General Counsel), Department of Energy, Room 6A-127, 1000 Independence Avenue, SW., Washington, D.C. 20585, (202) 252-6754 or 252-6736.

SUPPLEMENTARY INFORMATION:

I. Background
II. Proposed Amendments
III. Written Comments and Public Hearings Procedures
IV. Procedural Requirements

I. Background

Generally, under the current price regulations the maximum lawful price refiners may charge for unleaded gasoline is the May 15, 1973 selling price of unleaded gasoline plus increased product and non-produce costs. In addition, refiners are permitted to recoup additional increased costs on gasoline pursuant to the gasoline "tilt" rule in § 212.83(c) and the unleaded gasoline production incentive in § 212.83(j).

If a refiner did not sell unleaded gasoline on May 15, 1973, or 30 days prior thereto, as was the case for most refiners, the maximum lawful selling price for unleaded gasoline is calculated using an imputed May 15, 1973 selling price determined pursuant to § 212.112(b)(1). This imputed selling price is the weighted average selling price charged for leaded gasoline on May 15, 1973 of the same or nearest octane as the unleaded gasoline currently sold, plus one cent. The additional one cent is intended to reflect the additional cost associated with producing unleaded gasoline.

Pursuant to § 212.83(c)(1)(i)(B) refiners may designate different types and grades of gasoline as separate categories within the product category gasoline, provided such types and grades have consistently and historically been designated as such by the refiner and not disapproved by the DOE. In some instances, DOE has not disallowed refiners treating new grades of unleaded gasoline as separate product categories.

The current rules permit each individual refiner to allocate increased costs to specific categories of gasoline as the refiner deems appropriate. Thus, a refiner, which treats a single grade unleaded gasoline with an octane rating of 90 (R+M)/2 as a separate product category has the pricing flexibility under the present rules to allocate as much increased costs to the 90 octane (R+M)/2 unleaded gasoline as the refiner believes the market will allow.

In addition, refiners are permitted to increase the amount of costs which may be passed through in gasoline price increases to reflect increased production of unleaded gasoline (44 FR 69594, Dec. 3, 1979). The increased costs are permitted refiners which produce more unleaded gasoline than the national average or than they refined in the corresponding month in 1978.

On June 4, 1979, DOE issued a notice of proposed rulemaking (44 FR 32622, June 6, 1979) regarding the price rules for unleaded gasoline. In the Notice DOE proposed to amend § 212.112(b)(1) to delete the "same or nearest octane number" provision and to require that the imputed May 15, 1973 selling price for unleaded gasoline be computed using the weighted average price charged for all types and grades of leaded gasoline. After evaluating the comments received concerning this issue, DOE continued the rulemaking with respect to this rule. For a discussion of the comments see 44 FR 69595, December 3, 1979.

The purpose of this Notice is to propose various amendments to the unleaded gasoline pricing rules intended to encourage the increased production of unleaded gasoline with efficient octane ratings. DOE believes the current rules may encourage refiners to produce unleaded gasoline with a higher octane rating than is necessary for operating the current automobile fleet, which results in the use of more crude oil and other petroleum feedstocks than would otherwise be necessary. This is because the "same or nearest octane number" provision used in imputing the May 15, 1973 selling price for higher priced unleaded gasoline encourages refiners to produce gasoline with an octane number "closer" to the octane of the leaded premium gasoline they sold on May 15, 1973 than to the lower priced regular leaded gasoline they sold on that date. Accordingly, unleaded octane ratings tend to be higher than necessary. A second anomaly caused by the "same or nearest octane" rule occurs when firms produced only a subregular grade leaded gasoline on May 15, 1973, and are required to use the May 15, 1973 selling price of that subregular grade to impute unleaded May 15, 1973 selling prices. Thus, the "same or nearest octane" rule is wasteful of refining

capacity and is a misuse of petroleum resources. Accordingly, DOE proposes to remove these anomolies and to encourage production of unleaded gasoline with the most efficient octane ratings for the current automobile fleet and discourage the production of unleaded gasoline with octane ratings that are not efficient.

Because the primary purpose of this rulemaking proceeding is to ascertain what changes, if any, are needed to the DOE price rules to encourage the production of unleaded gasoline with octane ratings most appropriate for the American automobile fleet, commenters should address which parts, if any, of the alternative amendments proposed they support and which they oppose. DOE reserves the right to adopt all or parts of any of the various proposed amendments.

There is a fundamental distinction between the primary proposals described in Part II. The establishment of separate product categories for new grades of gasoline is a method of allocating allowable increased costs. The imputed May 15, 1973 selling price and octane adjustment proposals, however, do not have to be justified on the basis of refiners' actual costs. Thus, the proposals to establish the May 15, 1973 selling price and octane adjustment on the basis of octane ratings could result in a change in refiners' current margins. For example, under the current rules the unleaded margin is the margin of the "same or nearest octane" leaded gasoline sold on May 15, 1973 plus one cent. The proposed rules would base the unleaded margin for 87 octane (R+M)/2 unleaded gasoline on the margin for 89 octane (R+M)/2 leaded gasoline sold on May 15, 1973 and would increase the margin for higher grades. Conversely, permitting refiners to change their product categories to reflect new grades of gasoline is a method of allocating increased costs already incurred by the refiner and in itself would not change refiners' margins.

DOE believes its proposal to change the margin (*i.e.*, imputed May 15, 1973 selling price) for desirable grades of unleaded gasoline will provide refiners an economic incentive to produce gasoline of such octane levels. In addition, by deleting the "same or nearest octane" provision in the current rules, refiners will not be encouraged to produce unleaded gasoline with octane ratings "closer" to their historic premium leaded gasoline sold in May 15, 1973, in order to benefit from the higher margin recouped on it on May 15, 1973. Also, refiners which sold only a subregular grade of leaded gasoline on May 15, 1973, will not be required to use that selling price to impute a May 15, 1973 selling price for unleaded gasoline.

The proposal to allow refiners to treat new grades of unleaded gasoline as separate product categories will increase refiners' pricing flexibility between various grades of gasoline and thus increase competition for various grades of unleaded gasoline. Accordingly, DOE believes if refiners are permitted to allocate increased cost to grades of unleaded as they deem appropriate, refiners will increase their production of grades of unleaded gasoline more compatible with motorists' needs.

II. Proposed Amendments

A. Optional Calculation of Imputing a May 15, 1973, Selling Price

DOE proposes to amend the price rules to give all refiners the option of imputing a May 15, 1973 selling price and octane adjustment for unleaded gasoline as described in Section B below. By treating all refiners in a similar manner, whether or not they sold unleaded gasoline on May 15, 1973, all refiners will have the same economic incentives to produce unleaded gasoline.

Specifically, DOE is proposing that beginning on the date of the final rules, if any, are adopted, firms which sold unleaded gasoline on May 15, 1973 selling price for unleaded gasoline pursuant to the rules set forth in Section 212.112(b). In the alternative DOE is proposing that such refiners be required to impute the May 15, 1973 selling price for unleaded gasoline.

DOE solicits comments on whether refiners will elect to impute a May 15, 1973 selling price for unleaded gasoline under the various alternative methods proposed or continue to use the actual selling price. Specifically, refiners, which sold unleaded gasoline in May 1973, should submit data documenting what the May 15, 1973 selling price would be under the proposed methods of imputing the May 15, 1973 unleaded selling price. Comments are requested on the suitability of these options for refiners that intend to change octane levels.

B. Methods of Imputing the May 15, 1973, Selling Price for All Grades of Unleaded Gasoline

Currently refiners impute the May 15, 1973 selling price for unleaded gasoline using the May 15, 1973 weighted average selling price of leaded gasoline of the "same or nearest octane," plus one cent. DOE believes the current rule may be encouraging the production of unleaded premium gasoline with unduly high octane ratings in order to use leaded premium prices charged on May 15, 1973 to impute the May 15, 1973 selling price. Conversely, the production of unleaded gasoline with octane ratings only slightly higher than regular leaded gasoline is discouraged because the current rule requires that the imputed selling price for such unleaded gasoline be calculated on the basis of the lower octane regular leaded gasoline. Also, firms that produced a subregular leaded gasoline are at a price disadvantage compared to other unleaded refiners.

1. Imputed May 15, 1973, Selling Price for 87 Octane (R+M)/2 Unleaded Gasoline

DOE proposes that the imputed May 15, 1973 selling price for the EPA minimum specification 87 octane (R+M)/2 unleaded gasoline be based on the May 15, 1973 selling price for 89 octane (R+M)/2 leaded gasoline sold by the refiner on May 15, 1973, plus the current allowable one cent markup. DOE believes most refiners sold 89 octane (R+M)/2 leaded gasoline on May 15, 1973 and, therefore, it would be an appropriate base price for imputing minimum octane unleaded base prices. DOE solicits comments on the advisability of permitting firms to use the May 15, 1973 selling price of 89 octane (R+M)/2 leaded gasoline as the selling price for 87 octane (R+M)/2 unleaded gasoline.

Refiners that did not sell 89 octane (R+M)/2 leaded gasoline on May 15, 1973 would use the May 15, 1973 selling price of the leaded gasoline of the nearest octasne to 89 sold by the refiner, plus one cent, and adjust it upwards or downwards by one half cent an octane to reach 89 octane (R+M)/2 to impute the May 15, 1973 unleaded selling price for 87 octane (R+M)/2 unleaded gasoline. For example, a firm that only sold 86 octane (R+M)/2 leaded gasoline for 33 cents on May 15, 1973, would impute a May 15, 1973 selling price of 35.5 cents for 87 octane (R+M)/2 unleaded gasoline.

a. (89 (R+M)/2 − 86 (R+M)/2 = 3 octane ratings).

b. (3 octane ratings times .5 cent = 1.5 cents).

c. (33 cents + 1 cent + 1.5 cents = 35.5 cents).

Conversely, a firm that only sold 90 octane (R+M)/2 leaded gasoline for 36 cents on May 15, 1973, would impute a May 15, 1973 selling price of 36.5 cents for 87 octane (R+M)/2 unleaded gasoline.

a. (90 (R+M)/2 − 89 (R+M)/2 = 1 octane ratings).

b. (1 octane rating times .5 cent = .5 cent).

c. (36 cents + 1 cent — .5 cent = 36.5 cents).

DOE requests comments on what grades of leaded gasoline were sold by refiners on May 15, 1973.

2. *Octane Adjustment For Unleaded Gasoline Greater Than 87 Octane (R+M)/2.*

DOE proposes the following alternative methods of computing the adjustment to the imputed May 15, 1973 selling price of 87 octane (R+M)/2 unleaded gasoline to impute the May 15, 1973 selling price of higher octane unleaded gasoline. Generally, each proposal permits refiners an octane adjustment for each octane rating the unleaded gasoline is greater than 87 octane (R+M)/2. Refiners which sell an unleaded gasoline with an octane rating less than 87 octane (R+M)/2 will receive no increment or decrement. The octane rating of unleaded gasoline with a fractional octane rating of .5 or less shall be rounded to the lower whole number while fractions above .5 may be rounded to the next whole octane.

With respect to each of the octane adjustment proposals, DOE proposes that firms not be permitted an adjustment for octane improvements above 91 octane (R+M)/2. Thus, a refiner which sells 93 octane (R+M)/2 unleaded gasoline would only be permitted an adjustment equal to that permitted for 91 octane (R+M)/2. DOE solicits comments on the advisability of limiting the octane adjustment to octane increases between 87 and 91 octanes (R+M)/2 and, specifically, whether an unleaded gasoline with an octane higher than 91 octane (R+M)/2 is necessary for the current automobile fleet.

Primary Proposal: The adjustment would equal one half cent (.5 cent) for each octane rating (R+M)/2 the unleaded gasoline is greater than 87 octane (R+M)/2.[1] This adjustment is based on the estimated increased cost of producing higher grades of unleaded gasoline. For example, a refiner which sold 89 octane (R+M)/2 leaded gasoline on May 15, 1973 for 35 cents per gallon and currently sells unleaded gasoline with an octane rating of 91 (R+M)/2 would impute a May 15, 1973 selling price for unleaded gasoline of 38 cents per gallon.

a. (91 (R+M)/2 — 87 (R+M)/2 = 4 octane ratings).

b. (.5 cent x 4 octane ratings = 2 cents).

c. (35 cents + 1 cent + 2 cents = 38 cents).

DOE solicits comments on the advisability of requiring firms that sell unleaded gasoline with less than 87 octane (R+M)/2 rating to reduce the base price by .5 cent times each octane rating the unleaded gasoline is less than 87 octane (R+M)/2.

DOE invites comments, documented with financial data, regarding the appropriateness of using a one half cent increment to reflect increased unleaded octane ratings greater than 87 octane (R+M)/2. Moreover, DOE seeks information regarding the octane ratings of unleaded gasoline firms would sell, or foresee selling, if these amendments are adopted or if the regulation remains unchanged.

Alternative 1: The cents per gallon adjustment for octane ratings greater than 87 octane (R+M)/2 would equal the difference between the May 15, 1973 selling price of the highest and lowest octane leaded gasoline divided by the difference between the octane rating (R+M)/2 of the highest and lowest octane leaded gasoline sold by the individual refiner on May 15, 1973 to a class of purchaser. In most instances on May 15, 1973, leaded premium gasoline was 93 octane (R+M)/2 and the price spread between regular and premium gasoline was 2 cents at wholesale and 4 cents at retail. For example, a refiner that sold regular (89 octane) and premium (93 octane) leaded gasoline at retail at 35 cents and 39 cents, respectively, on May 15, 1973, would impute a May 15, 1973 retail selling price of 40.0 cents per gallon for unleaded gasoline with a 91 octane rating.

a. (93 (R+M)/2 — 89 (R+M)/2 = 1 octane ratings).

b. (39 cents — 35 cents = 4 cents).

c. (4 cents/4 octane ratings = 1.0 cent per octane rating).

d. (91 (R+M)/2 — 87 (R+M)/2 = 4 octane ratings).

e. (4 octane ratings x 1.0 cent = 4.0 cents).

f. (35 cents + 1 cent + 4.0 cents = 40.0 cents).

As an option within this alternative, DOE proposes that the leaded prices at one specific level of distribution, such as retail or the refinery gate, or the weighted average price of all sales, instead of for each class of purchaser, be used to calculate the adjustment. Thus, in lieu of computing the increment for each class of purchaser only one calculation would be made and that amount would be used to impute the May 15, 1973 unleaded selling price for every class of purchaser. For instance, in the above example, the imputed May 15, 1973 selling price to each class of purchaser would be the selling price of 89 octane (R+M)/2 leaded gasoline on May 15, 1973 to that class of purchaser, plus 1 cent, plus 4.0 cents. Rather than calculating the adjustment separately for each class of purchaser purchasing unleaded gasoline higher than 87 octane (R+M)/2, a single adjustment would be used.

Alternative 2: The adjustment would be based on a graduated scale with the fixed cents per gallon for each additional octane rating increasing as the octane rating increases over 87 octane (R+M)/2. That is, the fixed cents per gallon increase would be permitted to reflect each specific octane rating greater than 87 octane (R+M)/2. A graduated scale such as the following would be adopted. This would more truly reflect actual nonlinear costs to increase unleaded octane, but ignores the counterproductive effect of unnecessarily increasing the octane of unleaded gasoline beyond the point of automotive needs.[2]

	Incremental increase for each octane greater than 87 (R+M)/2 (in cents)	Total cents permitted for octane increases of corresponding amount
Total octane increase:		
1	.50	.50
2	.55	1.05
3	.60	1.65
4	.65	2.30
5	.70	3.00

Thus, a refiner that sold 89 octane (R+M)/2 leaded gasoline for 35 cents on May 15, 1973, would impute a May 15, 1973 selling price of 38.3 cents per gallon for 91 octane unleaded gasoline.

a. (91 (R+M)/2—87 (R+M)/2=4 octane ratings)

b. (4 octane ratings=2.30 cents)

c. (35 cents+1 cent+2.3 cents=38.3 cents)

DOE solicits comments, documented with financial data, on what the incremental cents per gallon per octane rating should be and if at some point the cents per gallon octane rating should become constant or decrease. In other words, DOE wants to know the exact cost of making each octane improvement in unleaded gasoline.

C. New Grades of Unleaded Gasoline

The provision in § 212.83(c)(1)(i)(B) which permits refiners to treat separate types and grades of gasoline as distinct products is based on the refiners' having "consistently and historically" done so and on notification of DOE. Consequently, there is a disincentive for refiners to introduce new grades of

[1] See *Regulatory Analysis* for discussion of the one half cent adjustment.

[2] See *Regulatory Analysis* for discussion of the graduated scale.

unleaded gasoline because refiners may not automatically treat such grades of unleaded gasoline as separate product categories. Thus, refiners are denied the pricing flexibility that results from being allowed to treat new grades of gasoline as separate product categories and, thereby, apportion increased costs to the new grade of gasoline as they deem appropriate.

DOE proposes to amend § 212.83(c)(1)(i)(B) to delete the "consistently and historically differentiated by the refiner" clause and the notification provision. In the alternative, DOE proposes to amend the provision and permit new categories to be established for new grades of unleaded gasoline with octane ratings above 87 octane (R+M)/2.

DOE believes either proposal will encourage the production of unleaded gasoline with more efficient octane ratings. This is because firms that introduce new grades of unleaded gasoline will automatically be permitted the pricing flexibility to apportion increased costs to the new grades as the refiner deems appropriate.

D. Unleaded Gasoline Production Incentive

Pursuant to § 212.83(j) refiners are currently permitted to increase the amount of costs which may be allocated to gasoline to reflect increases in unleaded gasoline production. The rule, "unleaded gasoline production incentive," which was adopted effective December 1, 1979, (44 FR 69594, December 3, 1979), is intended to encourage the production of unleaded gasoline. The provisions of the rule which establish the incentive, however, do not refer to the "bankability" or "sequence of recoupment" of increased costs derived from the incentive. Currently, the pass-through of the incentive is included in the "H" factor. Therefore, to clarify that recouped increased costs derived from the incentive may be "banked" and the exact order of recoupment, DOE proposes to amend the price formula to include the incentive in the "A" factor. By removing the incentive from the "H" factor, where its "bankability" and "sequence of recoupment" are not clear, and adding it to the "A" factor, DOE believes many uncertainties regarding the treatment of the incentive will be resolved.

III. Written Comments and Public Hearing Procedures

A. Written Comments

You are invited to participate in this proceeding by submitting data, views or arguments with respect to any matters relevant to this notice. Comments should be submitted by the date indicated in the "Dates" section of this notice and should be identified on the outside envelope and on the document with the docket number ERA-R-80-26 and the designation: "Price Rules for Unleaded Gasoline." Ten copies should be submitted.

Any information or data submitted which you consider to be confidential must be so identified and submitted in writing, one copy only. We reserve the right to determine the confidential status of such information or data and to treat it according to our determination.

B. Public Hearing

1. *Procedure for Request to Make Oral Presentation*—If you have any interest in the matters discussed in this notice, or represent a group or class of persons that has an interest, you may request an opportunity to make an oral presentation by 4:30 p.m. on August 29, 1980, for the Los Angeles hearing and September 9, 1980, for the Washington, D.C. hearing. You should also provide a phone number where you may be contacted through the day before the hearing.

If you are selected to be heard, you will be notified before 4:30 p.m. on September 4, 1980, for the Los Angeles hearing and September 10, 1980, for the Washington, D.C. hearing, and are requested to submit one hundred copies of your statement to the hearing location by 8:30 on the morning of the hearing.

2. *Conduct of the Hearing*—We reserve the right to select the persons to be heard at the hearing, to schedule their respective presentations, and to establish the procedures governing the conduct of the hearing. The length of each presentation may be limited, based on the number of persons requesting to be heard.

A DOE official will be designated to preside at the hearing. This will not be a judicial-type hearing. Questions may be asked only by those conducting the hearing. At the conclusion of all initial oral statements, each person who has made an oral statement will be given the opportunity to make a rebuttal statement. The rebuttal statements will be given in the order in which the initial statements were made and will be subject to time limitations.

If you wish to ask a question at the hearing, you may submit the question, in writing, to the presiding officer. The DOE or, if the question is submitted at a hearing, the presiding officer will determine whether the question is relevant, and whether time limitations permit it to be presented for answer. The question will be asked of the witness by the presiding officer.

Any further procedural rules needed for the proper conduct of the hearing will be announced by the presiding officer.

A transcript of the hearing will be made and the entire record of the hearing, including the transcript, will be retained by the DOE and made available for inspection at the DOE Freedom of Information Office, Room GA-152, James Forrestal Building, 1000 Independence Avenue, SW., Washington, D.C., between the hours of 8:00 a.m. and 4:30 p.m., Monday through Friday. You may purchase a copy of the transcript of the hearing from the reporter.

In the event that it becomes necessary for us to cancel the hearing, we will make every effort to publish advance notice in the Federal Register of such cancellation. Moreover, we will give actual notice to all persons scheduled to testify at the hearing. However, it is not possible to give actual notice of a cancellation or changes to persons not identified to us as participants. Accordingly, persons desiring to attend the hearing are advised to contact the DOE on the last working day preceding the date of the hearing to confirm that it will be held as scheduled.

IV. Procedural Requirements

A. Section 7 of the FEA Act

As required by section 7(a) of the Federal Energy Administration Act of 1974 (15 U.S.C. 787 *et seq.*, Pub. L. 93-275, as amended), a copy of this notice has been submitted to the Administrator of the Environmental Protection Agency (EPA) for his comments concerning the impact of this proposal on the quality of the environment. The Administrator requested that certain questions be asked of commenters and those questions are incorporated in this preamble. In addition, the Administrator commented that:

> "While we are encouraged that DOE is reviewing this aspect of the pricing rules, we ae concerned that DOE has never followed through on the commitment to regulate the retail price differential between leaded and unleaded gasoline. Differentials have steadily been rising, with the self-service differential currently over five cents. Spot market wholesale prices appear to be reflecting adequate relative supplies of unleaded to leaded, and hence low spot wholesale differentials. This may be due in part to the success of the unleaded production incentive. Yet retail marketing practices are still creating high differentials, which can lead to fuel switching and the loss of billions of dollars invested in emission controls."

After reviewing the proposal to which the Administrator refers, DOE determined that the economic impact of establishing a maximum retail price differential between leaded and unleaded gasoline could cause supply disruptions and adversely affect market conditions. Moreover, DOE does not believe, and EPA does not suggest, that retail price differentials are caused by or result from DOE's regulations. Rather EPA suggests that retail marketing practices create the differentials even in an adequate supply environment. Lundberg explains this phenomenon as resulting from retail price competition using regular leaded gasoline as the "fighting" grade. Lundberg suggests, however, that, as has already occurred on the West Coast, as unleaded gasoline becomes the dominant gasoline, it will become the "fighting" grade, lowering the differential. *See, Lundberg Letter*, July 18, 1980. In light of our commitment to phased decontrol, we believe it would be inappropriate to create a new retail price differential regulation with little more than a year remaining of our authority for such a regulation.

B. Section 404 of the DOE Act

Pursuant to the requirements of section 404(a) of the Department of Energy Organization Act (42 U.S.C. 7101 *et seq.*, Pub. L. 95-91), we have referred this proposed rule, concurrently with the issuance hereof to the Federal Energy Regulatory Commission for a determination as to whether the proposed rule would significantly affect any matter within the Commission's jurisdiction. The Commission will have until the scheduled close of the public comment period on the proposal to make such a determination.

C. Executive Order No. 12044

A regulatory analysis as required for proposed rulemakings pursuant to Executive Order 12044 entitled "Improving Government Regulations" (43 FR 12661, March 24, 1978) and DOE's implementing procedures, is being prepared by DOE. The proposed regulatory analysis is available at DOE's Office of Public Information, Room B-210, 2000 "M" Street, N.W., Washington, D.C. You are invited to comment on the proposed regulatory analysis. A summary of the proposed regulatory analysis is set forth below.

1. *Summary of Regulatory Analysis*—Most authorities agree that the optimal mix of unleaded gasoline would be two grades, with one of the grades at 3 octanes above the minimum grade required by the Environmental Protection Agency (EPA). Estimates are that, if 25 percent of unleaded gasoline were produced at the higher octane level, this mix would satisfy the needs of that portion of the unleaded automobile fleet that is perceived as performing unsatisfactorily using regular unleaded gasoline (87 octane (R+M)/2).

Relatively few refiners were selling unleaded gasoline on May 15, 1973, which was adopted as the base price date for gasoline. Thus, all other refiners must impute a selling price for unleaded gasoline using the May 15, 1973 selling price of leaded gasoline with the same or nearest octane, plus one cent. The maximum allowable price is then derived by adding increased costs allocated to all gasoline to the unleaded grade.

Most refiners imputing a selling price for unleaded gasoline produced a regular leaded grade of gasoline rated at 89 octane (R+M)/2, which for purposes of the DOE price regulations is closest in octane to the 87 octane (R+M)/2 unleaded grade required by EPA. However, a few refiners were marketing a leaded grade with a lower octane than 89 octane (R+M)/2, which is commonly referred to as "subregular," and that price was required to be the basis for imputing a base price for the minimum octane unleaded grade. We are aware of one refiner that was marketing only a premium leaded grade in May 1973 and, therefore, was able to impute a selling price from that higher priced product.

One of the proposed changes to the regulations would either allow or require all refiners, including those with May 15, 1973 actual base prices, to impute a selling price for a minimum grade of 87 octane (R+M)/2 unleaded gasoline using the base price of 89 octane (R+M)/2 leaded gasoline, plus one cent. This would remove any disparities caused because some refiners are required to impute unleaded gasoline May 15, 1973 selling prices while others use their actual May 15, 1973 selling prices. Although DOE has been informed of the existence of price disparities caused by the current regulations, we do not have sufficient data to calculate the effect of this proposal for purposes of the Draft Regulatory Analysis.

A second proposal also would permit refiners to impute a price for 87 octane (R+M)/2 unleaded gasoline equal to the May 15, 1973 selling price of 89 octane (R+M)/2 leaded gasoline but would include, in addition, a fixed or sliding octane adjustment to allow for increases in octane of unleaded gasoline above the EPA required minimum grade. Each of the options under this proposal would increase the refiner's margin for producing an unleaded gasoline with a higher octane than the minimum grade. However, each of the proposed options would cause potential price increases that are less than those that would occur if refiners produced a high octane unleaded gasoline solely to achieve a base price imputed from the May 15, 1973 selling price of premium leaded gasoline. The production by all refiners of an unnecessarily high octane unleaded gasoline to take advantage of the present "same or nearest octane" provision would result both in increased costs, due to greater production costs associated with higher octane unleaded, and a possible reduction in the overall supply of unleaded gasoline because of the loss of unleaded gallonage that results from the reforming necessary to achieve the higher octane.

A third proposal would allow refiners to allocate increased costs to different types and grades of gasoline whether or not they historically marketed the grades or priced them differently. This amendment would permit refiners to assign increased costs from the total increased cost pool, which includes costs associated with increasing the octane of unleaded gasoline, as they deem appropriate. Since there would be no increase in the refiner's margin or total profit if this proposal were to be selected, there is no additional cost to the consumer. The proposal does allow refiners to apply more increased costs to one type or grade of unleaded gasoline than to another. It is possible that a large portion of these costs would be allocated to the higher octane unleaded.

D. National Environmental Policy Act

At present the environmental consequences, if any, of the proposals in this Notice are being evaluated. The requirements of the National Environmental Policy Act will be satisfied before any final rules are issued pursuant to this Notice.

(Emergency Petroleum Allocation Act of 1973, (15 U.S.C. 751 *et seq.*), Pub. L. 93-159, as amended, Pub. L. 93-511, Pub. L. 94-99, Pub. L. 94-133, Pub. L. 94-163, and Pub. L. 94-385; Federal Energy Administration Act of 1974, (15 U.S.C. 787 *et seq.*), Pub. L. 93-275, as amended, Pub. L. 94-332, Pub. L. 94-385, Pub. L. 95-70, and Pub. L. 95-91; Energy Policy and Conservation Act, (42 U.S.C. 6201 *et seq.*), Pub. L. 94-163, as amended, Pub. L. 94-385, and Pub. L. 95-70; Department of Energy Organization Act, (42 U.S.C. 7101 *et seq.*), Pub. L. 95-91; E.O. 11790, 39 FR 23185; E.O. 12009, 42 FR 46267)

In consideration of the foregoing, DOE proposes to amend Part 212 of Chapter II, Title 10 of the Code of Federal Regulations, as set forth below:

Issued in Washington, D.C., August 8, 1980.

Hazel R. Rollins,

Administrator, Economic Regulatory Administration.

Primary Proposal

1a. Section 212.83(c)(1)(i)(B) is revised to read as follows:

§ 212.83 Price rule.

* * * * *

(c) *Allocation of increased costs.* * * *

(1) Allocation of increased costs incurred in the period "t"—

* * * * *

(i) * * *

(B) Notwithstanding any other provision of this Subpart, for purposes of this section, a refiner may designate as categories within the product gasoline different types (unleaded gasoline as differentiated from leaded gasoline) and grades (differentiated by octane number) of gasoline. In apportioning the total amount of increased costs allocable to gasoline among categories of gasoline, a refiner may apportion amounts of increased costs to a particular category of gasoline in whatever amounts it deems appropriate.

* * * * *

Alternative Proposal

1b. Section 212.83(c)(1)(i)(B) is revised to read as follows:

§ 212.83 Price rule.

* * * * *

(c) *Allocation of increased costs.* * * *

(1) Allocation of increased costs incurred in the period "t"—

* * * * *

(i) * * *

(B) Notwithstanding any other provision of this Subpart, for purposes of this section, a refiner may designate as categories within the product gasoline different types (unleaded gasoline as differentiated from leaded gasoline) and grades (differentiated by octane number), if the categories so designated by the refiner represent discrete gasoline types and grades that have been consistently and historically differentiated by that refiner. Beginning ———, 1980, all grades of unleaded gasoline (Alternative: add clause "with octane (R+M)/2 greater than 87 (R+M)/2") may be designated as separate categories. In apportioning the total amount of increased costs allocable to gasoline among categories of gasoline, a refiner may apportion amounts of increased costs to a particular category of gasoline in whatever amounts it deems appropriate.

* * * * *

Primary Proposal

2a. Section 212.83(c)(2)(iii)(C) *The "A" factor* is revised in the definition of "A_i" to read as follows:

§ 212.83 Price rule.

* * * * *

(c) *Allocation of increased costs.* * * *

(2) *Formulae.* * * *

(iii) *Definitions.* * * *

(C) *The "A" factor.* * * *

"A_i" is, for i=1, i=2, i=3, and i=4, the sum of the increased costs of crude oil attributable to the specific covered product or products of the type "i" purchased or landed on or after January 1, 1976 and prior to or during the period "s" and not recovered in sales of that product through the period "t" and the increased costs of crude oil attributable to the specific covered product or products of the type "i" purchased or landed on or after January 1, 1976 in the period "t." "A_i" also includes the increased costs of crude oil and purchased products attributable to the covered product or products of the type "i" incurred through December 31, 1975 and not passed through as of January 31, 1976, and not recovered in sales of that product through the period "t." Notwithstanding the foregoing provisions of this paragraph, beginning March 1, 1979, for the product i=3, "A_i" shall be at least 100% (one hundred percent) of "A_i^T," plus the sum of "A_i^S," and "A_i^R,"; but may, at the option of the refiner concerned, be up to 110% (one hundred ten percent) of "A_i^T," plus the sum of "A_i^S," and "A_i^R." Beginning December 1, 1979, (Alternative: Beginning ———, 1980) "A_i" shall include the unleaded gasoline production incentive found in § 212.83(j).

* * * * *

Primary Proposal

3a. Section 212.83(c)(2)(iii)(G) *The "H" factor* is revised to read as follows:

§ 212.83 Price rule.

* * * * *

(c) *Allocation of increased costs.* * * *

(2) *Formulae.* * * *

(iii) *Definitions.* * * *

(G) *The "H" Factor.*

H_i^u= For i=1, i=2, and i=4, the portion, if any, of the total dollar amount available in the period "u" for inclusion in price adjustments to the product of the type "i" that pursuant to paragraphs (d) or (e) of this section the refiner elects to include in prices of gasoline for the period "u" (in which case "H_i^u" shall be subracted); for "i"=3, the portion, if any, of the total dollar amount available in the period "u" for inclusion in price adjustments to No. 2 oils, aviation jet fuel, or general refinery products that pursuant to paragraphs (d) or (e) of this section the refiner elects to include in the price of gasoline for the period "u" (in which case "H_i^u" shall be added).

* * * * *

Primary Proposal

4a. Section 212.112(b)(1) is revised to read as follows:

§ 212.112 Unleaded gasoline.

* * * * *

(b) * * *

(1) For purposes of determining the weighted average price at which unleaded gasoline was lawfully priced in transactions with the class of purchaser concerned on May 15, 1973 in order to calculate the "maximum allowable price" as defined in § 212.82 a refiner shall use a price not in excess of either:

(i) The weighted average price at which 89 octane (R+M)/2 leaded gasoline was lawfully priced by it in transactions with the class of purchaser on May 15, 1973, computed in accordance with the provisions of § 212.83(a), plus 1 cent per gallon, plus an octane adjustment equal to one half cent (.5 cent) times each octane (R+M)/2 the unleaded gasoline is greater than 87 octane (R+M)/2. (Alternative: add sentence "No octane adjustment is permitted for octanes greater than 91 octane (R+M)/2.") If a firm did not sell 89 octane (R+M)/2 leaded gasoline on May 15, 1973, the firm shall use the May 15, 1973 selling price of the nearest octane gasoline sold by the firm on May 15, 1973, adjusted by one half cent (.5 cent) times each octane rating the gasoline was above or below 89 (R+M)/2, as the May 15, 1973 selling price for 89 octane (R+M/2 leaded gasoline; or,

(ii) The weighted average price at which unleaded gasoline was lawfully priced in transactions with the class of purchaser concerned on May 15, 1973, computed in accordance with the provisions of § 212.83(a); (Alternative: Delete clause (ii)) and,

* * * * *

Alternative Proposals

4b. Section 212.112(b)(1) is revised to read as follows:

§ 212.112 Unleaded gasoline.

* * * * *

(b) * * *

(1) For purposes of determining the weighted average price at which unleaded gasoline was lawfully priced in transactions with the class of purchaser concerned on May 15, 1973 in

order to calculate the "maximum allowable price" as defined in § 212.82 a refiner shall use a price not in excess of either:

(i) The weighted average price at which 89 octane (R+M)/2 leaded gasoline was lawfully priced by it in transactions with that class of purchaser on May 15, 1973, computed in accordance with the provisions of § 212.83(a), plus 1 cent per gallon, plus an octance adjustment for each octane (R+M)/2 the unleaded gasoline is greater than 87 octane (R+M)/2. (alternative: add sentence "No octane adjustment is permitted for octanes greater than 91 octane (R+M)/2.") The octane adjustment for each octane shall equal the difference between the May 15, 1973 selling price of the highest and lowest octane (R+M)/2 leaded gasoline divided by the difference between the octane (R+M)/2 of the highest and lowest octane leaded gasoline sold by the individual refiner to the particular class of purchaser on May 15, 1973;

(alternative: in lieu of class of purchaser use a specific level of distribution such as refinery gate or retail).

(ii) Or, the weighted average price at which unleaded gasoline was lawfully priced in transactions with the class of purchaser concerned on May 15, 1973, computed in accordance with the provisions of § 212.83(a); (Alternative: delete clause (ii)) and,

4c. Section 212.112(b)(1) is revised to read as follows:

§ 212.112 Unleaded gasoline.

* * * * *

(b) * * *

(1) For purposes of determining the weighted average price at which unleaded gasoline was lawfully priced in transactions with the class of purchaser concerned on May 15, 1973 in order to calculate the "maximum allowable price" as defined in § 212.82 a refiner shall use a price not in excess of either:

(i) The weighted average price at which 89 octane (R+M)/2 leaded gasoline was lawfully priced by it in transactions with that class of purchaser on May 15, 1973, computed in accordance with the provisions of § 212.83(a), plus 1 cent per gallon, plus an octane adjustment to reflect the total number of octanes the unleaded gasoline is greater than 87 octane (R+M)/2. The octane adjustment shall be as follows:

	Incremental increase for each octane greater than 87 (R+M)/2 (in cents)	Total cents permitted for octane increases of corresponding amount
Total octane increase:		
1	.50	.50
2	.55	1.05
3	.60	1.65
4	.65	2.30
5	.70	3.00

(ii) Or, the weighted average price at which unleaded gasoline was lawfully priced in transactions with the class of purchaser concerned on May 15, 1973, computed in accordance with the provisions of § 212.83(a); (Alternative: delete clause (ii)) and,

[FR Doc. 80-24831 Filed 8-14-80; 8:45 am]
BILLING CODE 6450-01-M

Federal Register

Friday
August 15, 1980

Part X

Federal Trade Commission

Trade Regulation Rule; Labeling and Advertising of Home Insulation

FEDERAL TRADE COMMISSION

16 CFR Part 460

Trade Regulation Rule; Labeling and Advertising of Home Insulation

AGENCY: Federal Trade Commission.

ACTION: Notice of effective date of rule, and of a stay of the effect of the representative thickness testing and television advertising disclosure requirements of the rule.

SUMMARY: The Federal Trade Commission has announced the effective date of a final rule concerning the labeling and advertising of home insulation (16 CFR Part 460). At the same time, the Commission has temporarily stayed the effective date of § 460.6 of the rule, which requires that insulation R-values be determined by "representative thickness" testing, until such time as thick calibration materials for such testing are made available from the National Bureau of Standards. The Commission also has temporarily stayed §§ 460.10, 460.18, 460.19 and Appendix B of the rule, which specify requirements for insulation advertising, insofar as they apply to television advertisements, pending the initiation and completion of further rulemaking proceedings concerning affirmative disclosure requirements for television advertisements.

EFFECTIVE DATE: September 29, 1980.

FOR FURTHER INFORMATION CONTACT: Kent C. Howerton, 202-724-1514, Attorney, Division of Energy and Product Information, Bureau of Consumer Protection, Federal Trade Commission, Washington, D.C. 20580.

SUPPLEMENTARY INFORMATION:

I. Background

A. *History.* On August 31, 1979, the Commission promulgated a trade regulation rule on the labeling and advertising of home insulation.[1] The Commission announced in that notice that the effective date of the rule would be November 30, 1979.[2]

On November 7, 1979, the Commission announced its determination to delay the effective date until December 31, 1979.[3] Thereafter, on December 17, 1979, the Commission announced that the rule would not become effective before at least March 16, 1980.[4] That announcement was occasioned by Congressional action on November 16, 1979, which barred any trade regulation rules promulgated by the Commission after August 30, 1979, from becoming effective until March 16, 1980, unless authorizing legislation for the Commission was enacted before that date.[5] Through a series of additional continuing resolutions passed by the Congress after November 16, 1979, the restrictions on implementation of Commission trade regulation rules were extended through May 31, 1980. At that time, the restriction on implementation of the home insulation rule was rescinded.

The Commission's prior announcements postponing the effective date of the rule were also occasioned by the following series of events.

On August 31, 1979, several members of the mineral wool insulation industry filed a petition for review of the rule in the United States Court of Appeals for the Tenth Circuit.[6] On September 28, 1979, these manufacturers also filed a petition with the Commission for a stay of the representative thickness testing and television advertising disclosure provisions of the rule pending appeal.[7] Following these filings, the Commission's staff became engaged in consultations with various parties, including industry representatives and the National Bureau of Standards (NBS), in an attempt to achieve a fair and workable resolution of the representative thickness testing issue. The stay of the rule which was announced by the Commission on November 7, 1979 was designed to provide the staff with an opportunity to complete the on-going consultations on representative thickness testing.[8]

Following these consultations, NBS proposed an enforcement bulletin in which it recommended that manufacturers of mineral wool batts and blankets be allowed to test thin product samples until thick calibration samples, designed for representative thickness testing, are available from NBS.[9] NBS made this recommendation after it consulted with interested industry members and reviewed available literature—including recent results of testing under the Department of Commerce's National Voluntary Laboratory Accreditation program (NVLAP)—concerning the effects of thin-sample testing and the present feasibility of representative thickness testing of mineral wool batts and blankets. The NBS enforcement bulletin, related correspondence between NBS and the Commission, and other material relevant to representative thickness testing developed after the rulemaking record of this proceeding closed on September 22, 1978, were placed on the record of this proposed stay proceeding[10] and made available for review by the public during a comment period concerning a proposal made by the Commission to stay the representative thickness testing requirement. This other material includes, *inter alia*, technical information provided by the mineral wool manufacturers and other interested parties, relevant portions of the transcript of the Congressional hearings in which questions were raised concerning representative thickness testing, and correspondence between the Commission and members of the industry, the public, and the Congress relating to the issue of representative thickness testing.[11]

Following this process of consultation on the representative thickness testing issue, the Commission and the mineral wool manufacturers agreed to ask the Tenth Circuit to remand the rule to the Commission. On January 4, 1980, the Court approved the joint stipulation of the mineral wool petitioners and the Commission, and remanded the rule to the Commission for further proceedings.[12]

Under the Court's order remanding the rule, the Commission must reconsider issues relating to the representative thickness testing and television advertising disclosure requirements of the rule. The Commission must provide all interested parties with notice and an opportunity for hearings, submissions, and presentations, including cross-examination and rebuttal, in accordance with Sections 1.7-1.20 of the Commission's Rules of Practice, concerning:[13] (1) whether representative thickness testing of mineral wool batts and blankets is feasible at this time, absent standard

[1] 44 *Fed Reg.* 50218 (1979).

[2] *Id.*

[3] 44 *Fed Reg.* 64402 (1979).

[4] 44 *Fed Reg.* 73017 (1979).

[5] *Id.*

[6] *Johns-Manville Corp. v. FTC*, No. 79-1955 (10th Cir., filed Aug. 31, 1979).

[7] Petition To Federal Trade Commission For Stay Of The Effective Date Of "Representative Thickness" Testing Provision Of Home Insulation Rule And The Mandatory Television Advertising Disclosure Portions Of The Rule (September 28, 1979). F.T.C. File No. 215-59.

[8] 45 *Fed Reg.* 37674 (1980).

[9] Letter of November 19, 1979, to Michael Pertschuk, Chairman, Federal Trade Commission, from Ernest Ambler, Director, National Bureau of Standards, with attached proposed Enforcement Bulletin, W-35.

[10] The record of the stay proceeding is found in category "W" in FTC File No. 215-59. Documents on that record cited in this notice are referred to by their document number, *e.g.*, "W-1", "W-30".

[11] *Supra*, note 9.

[12] *Johns-Manville Corp. v. FTC*, No. 79-1955 (10th Cir., filed Aug. 31, 1979), Order of January 4, 1980. W-12.

[13] *Id.*

calibration materials for such testing; (2) whether present thin-sample testing of mineral wool batts and blankets produces an unfair or deceptive overstatement of their claimed R-values; (3) the disclosure requirements of the rule as they apply to television advertising; and (4) such other matters as the Commission deems appropriate.

B. *Issues.*

1. *Representative Thickness Testing.* With respect to the issue of representative thickness testing, paragraph 2 of the stipulation provides that the Commission can dispense with hearings, submissions, and presentations, including cross-examination and rebuttal, if it décides to allow testing of mineral wool batts and blankets pursuant to the enforcement bulletin issued by NBS, or one agreeable to petitioners.[14] The NBS enforcement bulletin would allow testing of samples at 150 percent of the present one-inch NBS primary standards, or, for materials of 1.5 inch thickness or less, at the full thickness, until NBS has made available thick standard calibration samples designed for representative thickness testing.[15] The National Bureau of Standards has recently reaffirmed its commitment to make these thick standard calibration samples available by January of 1981.[16]

In proposing to stay the representative thickness testing requirement, the Commission carefully considered NBS's findings and recommendations concerning the effects of thin-sample testing and the present feasibility of representative thickness testing. The Commission also weighed the prospects for attempting to resolve the representative thickness testing issue through further rulemaking. Under the terms of the Court's remand order, the Commission may not implement the representative thickness testing requirement before NBS calibration materials are available without first conducting further rulemaking under the Commission's trade regulation rulemaking requirements [16 CFR 1.7–1.20] to consider both the effects of thin-sample testing and the feasibility of representative thickness testing in the absence of thick standard calibration materials.[17]

Despite the evidentiary basis for representative thickness testing found in the rulemaking record and relied upon by the Commission in promulgating a representative thickness testing requirement last August, the Commission stated that it had become increasingly clear since promulgation of the rule that the question of representative thickness testing raises extraordinarily complex, and controversial, technical and scientific issues.[18] It also had become clear that the insulation industry, the thermal testing community, and relevant governmental agencies are still conducting research in this area and could not themselves yet agree on the essentially technical questions of the effects of thin-sample testing and the present feasibility of representative thickness testing.[19] In these circumstances, the Commission was uncertain whether further rulemaking proceedings could satisfactorily resolve these issues. In addition, such rulemaking would be time-consuming and might not be completed before the time that standard calibration materials are available from NBS for representative thickness testing. In that event, further rulemaking would provide little, if any, benefit to the consuming public.

For these reasons, the Commission tentatively decided not to propose further rulemaking on the representative thickness testing controversy at this time. Instead, the Commission proposed that the representative thickness testing requirement be stayed temporarily until standard calibration materials are available from NBS.[20]

Although the remand order of the Court covers the testing requirements of the rule only as they apply to mineral wool batts and blankets,[21] the Commission believed that, in the interests of fairness and uniformity, all products should be subject to the same standard. Therefore, the Commission proposed to stay the representative thickness testing requirements on an industrywide basis.[22] During the period of the stay, testing of samples could be performed either at representative thickness or at the thickness(es) allowed under the ASTM R-value test procedures referenced in the rule. The Commission stated that it would rescind the stay when thick calibration samples designed for representative thickness testing become commercially available to the industry.

The Commission determined that the representative thickness testing requirement is severable under the rule. Further, the Commission stated its belief that it has the inherent discretion to issue a temporary stay of the representative thickness testing requirement of the rule. However, the Commission also believed that it would benefit from the views of interested parties on whether a temporary stay of the representative thickness testing requirement is in the public interest before making a final decision on this proposed stay.[23]

2. *Television Advertising Disclosures.* The rule requires, among other things, that insulation advertisers make certain affirmative disclosures in any advertisement or other promotional material which contains claims relating to R-value, price, thickness, product comparison, or energy savings. The rule also requires that the prescribed affirmative disclosures be made clearly and conspicuously, and defines the meaning of clear and conspicuous disclosure in the context of television advertisements.

The Tenth Circuit's order remanding the rule to the Commission requires the Commission to reopen the rulemaking record concerning the television advertising disclosure requirements.[24] The Court's order states that the Commission must provide an opportunity for full hearing and presentations, including cross-examination and rebuttal, in the reopening of the rulemaking record. Therefore, in light of the remand order, the Commission proposed to conduct further rulemaking proceedings on the television advertising disclosure requirements of the rule.[25]

The Commission determined that these requirements are severable under the rule. Further, the Commission stated its belief that it has the inherent discretion to issue a temporary stay of the television advertising disclosure requirements of the rule, pending completion of the rulemaking proceedings. However, the Commission also believed that it would benefit from the views of interested parties before

[14] *Id.* The petitioners and the Commission have filed with the Tenth Circuit an agreement stating that the proposed temporary stay of § 460.6 is equivalent to issuance of the NBS enforcement bulletin and satisfies the requirements of Paragraph 2 of the Stipulation.

[15] *Id.* NBS may not actually be making available what are known as "standard reference materials," but, in any event, it will make available a material that will permit industry members to perform representative thickness testing in an accurate manner.

[16] Letter of January 17, 1980, to Albert H. Kramer, Director, Bureau of Consumer Protection, Federal Trade Commission, from Jack E. Snell, Director, Office of Energy Programs, National Engineering Laboratory, National Bureau of Standards, W-37.

[17] *Supra* note 12.

[18] 45 *Fed. Reg.* at 37675.

[19] *Id.*

[20] *Id.* at 37674–75.

[21] *Supra*, note 12.

[22] 45 *Fed. Reg.* at 37675.

[23] *Id.*

[24] *Supra*, note 12.

[25] 45 *Fed. Reg.* at 37674–75.

making a final decision on this proposed stay.[26]

C. *Public Comments on Proposed Stays.* The Commission invited written public comments on its proposals to stay the representative thickness testing requirement, pending the availability of thick standard calibration samples, and to stay the television advertising disclosure requirements, pending completion of further rulemaking proceedings. In the invitation to comment, the Commission announced that, upon review of the comments received, it would determine whether to make the proposed stays effective. The Commission further announced that, if it decided to stay the representative thickness testing and the television advertising disclosure requirements of the rule, it would make effective all other portions of the rule, following reasonable advance notice, if Congressional restrictions on implementation of pending Commission rules were not in effect at that time. In that event, the Commission stated that the effective date would be published in the Federal Register with sufficient advance notice to all industry members who have compliance obligations under the rule.[27]

II. Analysis of the Comments

A total of twenty-six (26) comments were submitted. Several of the commenters addressed issues that are not relevant to the proposed stays. They requested exemptions from coverage of the rule,[28] or raised other arguments about various requirements in the rule.[29] Only twenty-one (21) comments directly addressed the proposed stays.

A. The Representative Thickness Testing Requirement

In requiring representative thickness testing, the Commission relied on record evidence that R-values derived from thin-sample testing are misleading because they fail to reflect the non-linear relationship between thickness and R-values,[30] and that the margin of testing error associated with representative thickness testing is within acceptable limits despite the unavailability of standard calibration materials from NBS.[31]

In proposing the stay, the Commission tentatively concluded that the most appropriate course of action would be to implement the rule without requiring representative thickness testing until calibration materials become available. This conclusion was based on new evidence submitted by NBS, evidence which cast doubt on the magnitude of the thickness effect and of the testing error associated with representative thickness testing. NBS reviewed data and literature not available during the rulemaking proceeding, and concluded that the thickness effect ranges between 2 and 10 percent, and that the testing error associated with representative thickness testing is as high as 6 percent.[32] Thus, according to NBS, the overstatement of R-value caused by extrapolation from the results of thin-sample testing is of approximately the same magnitude as the testing error associated with testing thick samples without calibration materials.

The only trade association that commented was the Society of the Plastics Industry, Inc., representing sellers of cellular plastics insulation products. Trade associations for other industry segments did not submit comments. These other segments include sellers of insulation products such as cellulose, urea formaldehyde foam, aluminum foil, mineral wool, perlite and vermiculite.

Eight (8) comments supported the need for the Commission to implement the rule now even without requiring representative thickness testing.[33] These comments represented the views of five (5) mineral wool companies, three (3) cellulose companies, the Environmental Group, and the U.S. Department of Energy.

A few commenters disputed the contention that representative thickness testing could not be conducted without standard calibration materials from NBS.[34] Lastly, several commenters argued that the Commission should not make the rule effective without the representative thickness testing requirement for one or more of the following reasons: (1) thin-sample testing yields misleading R-values;[35] (2) to do so would unfairly discriminate against products which do not exhibit a thickness effect;[36] (3) it would destroy

---

[26] *Id.*

[27] *Id.*

[28] The Celotex Corporation, W-119; National Manufactured Housing Federation, Inc., W-122; National Association of Home Builders, W-127; The Society of the Plastics Industry, Inc., W-131; Manufactured Housing Institute, Inc., W-140; Indiana Manufactured Housing Association, Inc., W-142. These exemption requests will be dealt with separately.

[29] Dow Chemical Company, W-118; Applegate Insulation Systems, Inc., W-124; National Association of Home Builders, W-127; Southern California Gas Company, W-128; Brick Institute of America, W-130; Owens-Corning Fiberglas Corp., W-134; Brouk Co., W-136.

[30] Statement of Basis and Purpose for Trade Regulation Rule on Labeling and Advertising of Home Insulation (hereinafter cited as "Statement of Basis and Purpose"), 44 *Fed. Reg.* 50218, 50226 (1979).

[31] *Id.* at 50226. However, the Commission acknowledged the lack of standard calibration materials as a shortcoming, and encouraged their rapid development. *Id.*

[32] Letter of November 19, 1979, to Chairman Pertschuk from Dr. Ernest Ambler, Director, National Bureau of Standards, W-35.

[33] Environmental Group, W-132; Johns-Manville Corp., CertainTeed Corp., and Rockwool Industries, Inc., W-133; Owens-Corning Fiberglas Corp., W-134; Thermo Products of Florida, Inc., W-135; Rock Wool Manufacturing Co., W-137; Rhode Island Energy Corp., W-139; Cellin Manufacturing, Inc., W-141; and U.S. Department of Energy, W-143.

The Environmental Group suggested that, if the Commission implements the rule while staying the representative thickness testing requirement, it will be necessary for it also to stay other provisions which prohibit extrapolation of R-values. One such provision prohibits installers from multiplying the R-value by the number of inches installed to determine the total R-value. Environmental Group, W-132. The Commission does not believe that it is necessary for it to stay these additional provisions. The installer should base the total R-value disclosure on the R-values listed on the label, so it is not necessary to stay that provision. The only additional such provision in the rule is the prohibition against making per inch R-value claims. The Commission believes that it should not stay that provision because such claims will perpetuate the consumer's belief that R-values are linear, and thus would interfere with the effectiveness of the rule after the stay of the representative thickness testing requirement is lifted.

[34] Ganey Industries, Inc., W-120; Roy & Sons, Inc., W-123; Geoscience, Ltd., W-125; Alfol, Inc., W-130. However, these commenters offered no additional evidence to dispute the NBS conclusions that standard calibration materials are necessary to calibrate equipment used to conduct tests according to ASTM C-518 and to verify results of tests conducted according to ASTM C-177 or ASTM C-236 so that testing error can be eliminated. In fact, the only technical data submitted to the Commission which was not reviewed by NBS was a report recently prepared by Oak Ridge National Laboratory. *Infra*, note 39. That report draws no conclusions concerning the magnitude of thick sample testing error in general. It does conclude that the thick sample testing error of the Dynatech guarded hot plate used in the study was plus or minus 3 percent. *Id.* at 20, 49.

[35] Applegate Insulation Systems, Inc., W-124 (without representative thickness testing, Commission legitimizes false R-value claims); Geoscience, Ltd., W-125 (old procedures result in excessive R-value claims); National Association of Home Builders, W-127 (Commission has already found that R-values based on thin-sample tests are false). *But cf.* Environmental Group, W-132 (far better to give consumers information based on thin-sample testing than to give them no information at all); Johns-Manville Corp., CertainTeed Corp., and Rockwool Industries, Inc., W-133 (representative thickness testing without calibration materials is unreliable and would mislead public); Owens-Corning Fiberglas Corp., W-134 (representative thickness testing without calibration samples would deceive public); Rockwool Manufacturing Co., W-137 (consumer needs the protection of the provisions of the rule not being stayed.)

[36] The Monticello Group, W-121 (not in their interests to stay representative thickness testing because expanded polystyrene has nearly linear R-value); Geoscience Ltd., W-125 (old procedure of claiming excessive R-values stifles competition); Monsanto Company, W-129 (proposed stays discriminate in favor of manufacturers who cannot comply with stayed provisions); Alfol, Inc., W-130 (proposed stay unfair to multi-panel foil manufacturers who must test under ASTM C-236). *But cf.* The Celotex Corp., W-119 (there is a strong need for early implementation of the rule even without representative thickness testing);

Footnotes continued on next page

the impetus to promptly resolve the technical problems associated with representative thickness testing;[37] (4) it would unfairly discriminate against products, like multi-panel foil insulations, which must be tested at greater thicknesses.[38]

It is important to note, however, that none of the commenters submitted additional data which disputes the NBS conclusions. The only additional technical information submitted to the Commission was a report recently issued by Oak Ridge National Laboratory (ORNL).[39] The report was prepared for the Department of Energy, based on a study ORNL conducted to obtain and evaluate full-thickness thermal performance data on mineral fiber batt insulation. ORNL reported that it had measured a thickness effect of approximately eight (8) percent in the R-11 fiberglass batts it tested and of approximately seven (7) percent in the R-19 fiberglass batts it tested.[40] However, the report recommends that a further study should be undertaken to confirm the results of its study that R-values obtained by extrapolation from thermal resistance measurements on thin samples of insulation are greater than R-values obtained by full-thickness testing,[41] thus conceding that further research is necessary to substantiate this preliminary finding.

The Commission has given serious consideration to each of the comments received, and believes that it should implement the rule while staying the representative thickness testing requirement, for the following reasons.

First, in regard to the argument that thin sample testing will yield misleading R-values, the Commission now believes, based on new evidence, including the NBS analysis and comments received, that the thickness effect may not be as great as the evidence on the rulemaking record indicated. The best evidence now available indicates that the thickness effect may range from two (2) to ten (10) percent. It also indicates that the testing error associated with testing at representative thickness without thick standard calibration materials may be plus or minus six (6) percent, significantly greater than was indicated on the rulemaking record.[42] This testing error for representative thickness testing is of approximately the same magnitude as the error caused by extrapolation of R-values from the results of thin-sample testing.[43]

Second, in response to the argument that a stay would unfairly discriminate against those products which do not exhibit a thickness effect, the Commission notes that the stay of the representative thickness testing requirement will apply to all types of insulation. All low density insulations exhibit some thickness effect; the difference in thickness effects between different insulation products is a matter of degree.[44]

The Commission recognizes that a stay of the representative thickness testing requirement will leave temporarily unremedied one source of competitive injury. Sellers of those types of insulation that demonstrate the largest thickness effect will be permitted to continue overrating the R-value of their products to a limited degree. However, in light of the remand order, the only alternative to a stay of the representative thickness testing requirement would be to delay indefinitely the implementation of the entire rule. This latter action would, in the Commission's view, have competitive effects much more serious than those associated with a stay of representative thickness testing. Without the rule, responsible industry members, who presently base their R-value claims on recognized tests and follow sound quality control procedures, would be forced to compete with less responsible firms, who could inflate their R-value claims or fail to test for R-value. Similarly, without any rule, industry members would be under no obligation to make R-value claims that account for factors that are known to affect R-value.[45] Further, insulation industry members would be able to make exaggerated claims of fuel savings to be gained from insulation purchases, without any reasonable basis for the claims. Thus, while a stay of the representative thickness testing requirement does not eliminate the competitive injury caused by current thin-sample testing practices, implementation of the remainder of the rule will call a halt to numerous other practices that produce serious

---

Footnotes continued from last page
Environmental Group W-132 (further delay of the rule harms achievement of national energy policy goals, limits the extent to which energy use reduction takes place, and perpetuates consumer ignorance and waste); Thermo Products of Florida, Inc., W-135 (consumer and insulation industry drastically need the rule even without representative thickness testing); Cellin Manufacturing Inc., W-141 (although stay of representative thickness testing benefits mineral fiber producers over small businessmen, consumers and nation's energy conservation effort, rest of rule should be implemented for the benefit of the common good).

[37] The Society of the Plastics Industry, Inc., W-131.

[38] Alfol, Inc., W-138. However, unlike mass insulations, the thermal resistance of reflective foil insulations is not provided by the material itself. Rather, the insulating ability is provided by installing the foil adjacent to an air space, significantly increasing the thermal resistance of the airspace. *Supra*, note 30 at 50219. The only manner in which the R-value of multi-panel foil insulations can be measured is by tests of the actual multi-panel foil system conducted under ASTM C-236. For this reason, a stay of the representative thickness testing requirement does not affect the testing requirement for multi-panel foil systems.

[39] R. P. Tye *et al.*, "An Experimental Study of Thermal Resistance Values (R-Values) of Low-Density Mineral-Fiber Building Insulation Batts Commercially Available in 1977," ORNL/TM-7266, published April, 1980, W-27. A copy of this report was placed on the stay record and was available for public inspection during the comment period.

[40] *Id.* at 47.

[41] *Id.* at 51. One of the authors of the report has submitted a comment on the proposed stay of the representative thickness testing requirement. He explains that Oak Ridge National Laboratory has developed a mathematical model, based on thermal performance tests, which might be used to calculate accurately the R-values of thick insulation from results of tests conducted on only one to two inch samples. Although he concedes that the model needs verification, he suggests that, if the model proves to be valid, it could be used as an alternative to representative thickness testing. Oak Ridge National Laboratory, W-126.

[42] Round robin test results on thick samples using representative thickness testing techniques varied by only 3 or 4 percent. Statement of Basis and Purpose, *supra* note 30, at 50226. That amount is much less than the range of 12 percent which NBS has now concluded exists.

[43] *See* text accompanying notes 32, 39-41, *supra*. Examples of the interaction between the thickness effect and the testing error on mineral wool batts and blankets at R-11 and R-19 are set forth for purposes of illustration.

For an R-11 batt with a 5% thickness effect, the actual R-value will be 10.5. Factoring in the testing error of plus or minus 6%, the tested R-value could range between 9.8 and 11.1.

For an R-19 batt with a thickness effect of 5%, the actual R-value, taking account of the thickness effect, will be 18.1. Factoring in a testing error of plus or minus 6%, the tested R-value could range between 17 and 19.1.

[44] *E.g.*, Tye, M/809; "Discussion on Experiments to Separate the 'Effect of Thickness' from Systematic Equipment Errors in Thermal Transmission Measurements," by C. M. Pelanne, Johns-Manville Research & Development Center, presented at the ASTM C.16.00 Thermal Insulation Conference, October 22-25, 1978, Tampa, Florida, W-21; "Experimental Determination of the Thickness Effect in Fibrous Insulations," by Marion Hollingsworth, Jr., Scientist, Research & Development Division, Building Research Laboratory, Owens-Corning Fiberglas Corporation, presented at the ASTM Thermal Insulation Conference, October 22-25, 1978, Tampa, Florida, W-24; Letter of October 15, 1979, to Sen. Wendell Ford, Chairman Consumer Subcommittee of Senate Committee on Commerce Sciences Transportation, from R. P. Tye, Senior Scientist Materials and Systems Evaluation, Dynatech R/D Co., plus attached comments on MIMA statements, W-75.

[45] For example, urea-based foam insulation manufacturers could make inflated R-value claims that do not reflect the substantial adverse effect that shrinkage has on that product's R-value, and unfairly compete against manufacturers of other products on the basis of those claims. Likewise, manufacturers of loose-fill products would be able to make R-value claims that do not reflect the adverse effect of settling on those product R-values.

competitive inequities in the home insulation market.[46]

Third, the argument that implementation of the rule in the absence of the representative thickness testing requirement will destroy the impetus to promptly resolve the technical problems associated with representative thickness testing is not persuasive. The Commission is convinced, in light of repeated public commitments from NBS,[47] that the stay of the representative thickness requirement of the rule will be short and that NBS will meet its January 1981 schedule for making thick standard calibration materials available. In fact, the Commission believes that implementation of the rule will provide additional impetus to NBS to meet the promised January, 1981 deadline.

Fourth, the Commission believes that a stay of the representative thickness testing requirement will not unfairly discriminate against products like multi-panel foil insulations, which must be tested at their full system thickness. Manufacturers of multi-panel foil insulations will have to test their products under ASTM C-236 as they are actually used, regardless of the Commission's decision regarding the representative thickness testing requirement. That type of testing is the only manner in which the R-value of that multi-panel foil insulation can be determined.[48]

Although the Commission still is committed to representative thickness testing as the best and most accurate measure of the R-value of home insulation, it believes that it is in the public interest to implement the rule while temporarily staying the representative thickness testing requirement. Notwithstanding the fact that thin-sample testing may result in some consumers being misled to a limited degree regarding the insulating ability of a particular product, the Commission has concluded that the potential deception that may occur due to a limited overstatement of R-values is clearly outweighed by the consumers' need for the best information now available to enable them to compare products and make the most cost-effective purchases of home insulation.

Moreover, the Commission believes, and many commenters recognized, that consumers will reap substantial benefits from immediate implementation of the other requirements of the rule. The rule will ensure that all manufacturers conduct R-value tests on their products, using standardized test procedures. It will ensure that claimed R-values are reduced to take into consideration factors, such as shrinkage and settling, which affect R-value, and that disclosure of R-value is made in a manner which is understandable and useful to consumers. In the absence of the rule, consumers will continue to be denied access to R-value information that is disclosed in a uniform manner based on standardized tests. Disclosure of R-value information through labeling, fact sheets, advertisements and other promotional material will allow consumers to begin to understand how insulation works and how to purchase insulation, and thus, to purchase insulation based on R-value rather than on thickness. The rule will ensure that savings claims are substantiated and that consumers will be properly informed of factors which can affect the amount of savings they may realize.[49] These protections are especially necessary during this period of tax credits and other government sponsored incentives [50] presently operative in the insulation market. These incentives can be fairly characterized as spurring consumer purchases in this market as well as inducing consumer confidence in the performance of insulation products.

The Commission now believes that the thickness effect may be significantly smaller and that the testing error may be larger than was indicated by the rulemaking record. The Commission recognizes that the factual issues of the precise magnitudes of the thickness effect and testing error are unresolved at this time. However, the Commission continues to believe that these issues cannot be resolved prior to the time when the thick calibration materials become available from NBS and moot the controversy.

After carefully weighing the strong benefits to consumers and competitors from prompt implementation of the rule against the limited potential overstatement of R-value that may occur in the absence of a representative thickness testing requirement, the Commission concludes that the public interest is best served by implementation of the rule while temporarily staying the representative thickness testing provision.

B. The Television Advertising Disclosure Requirements

None of the commenters opposed the stay of the television advertising disclosure requirements. the few who addressed the issue argued that it was important that consumers have the benefits and protection of the other provisions of the rule as quickly as possible.[51]

The Commission believes that a temporary stay of the television advertising disclosure requirements will not seriously affect the effectiveness of the rule or the benefits to consumers from early implementation of the other provisons of the rule. Additionally, the disclosures required on labels, in fact sheets and in other types of advertisements will provide consumers with essential pre-purchase information which will allow them to make cost effective insulation purchases during the period of time when further rulemaking proceedings consider the television advertising disclosure requirements.

III. Conclusion

In accordance with the foregoing, the Commission hereby stays Section 460.6 of the rule, which requires that R-values be determined by representative thickness testing, until such time as thick calibration materials for such testing are made available by NBS. The Commission also stays Sections 460.10, 460.18, 460.19 and Appendix B of the rule, which specify requirements for insulation advertising, insofar as they apply to television advertisements, pending the initiation and completion of further rulemaking proceedings concerning the affirmative disclosure requirements for television advertisements. All other provisions of 16 CFR Part 460 will take effect on September 29, 1980.

By direction of the Commission.

James A. Tobin,

Acting Secretary.

[FR Doc 80-24830 Filed 8-14-80; 8:45 am]

BILLING CODE 6750-01-M

[46] *See* Statement of Basis and Purpose, *supra* note 30 at 50221-25.

[47] *Supra*, note 16. NBS has also assured DOE that it intends to make standard calibration materials available by January, 1981. U.S. Department of Energy, W-143.

[48] *Supra*, note 38.

[49] See Statement of Basis and Purpose, *supra* note 30 at 50221-35.

[50] These incentives include the tax credit for purchases of insulation authorized by the National Energy Act and the Residential Conservation Service Program under the National Energy Conservation and Policy Act. The tax credit program for energy conservation purchases is in effect only through 1985.

[51] The Celotex Corp., W-119; Environmental Group, W-132; Thermo Products of Florida, Inc., W-135; Rock Wool Manufacturing Co., W-137.

federal register

Friday
August 15, 1980

Part XI

Nuclear Regulatory Commission

Functional Criteria for Emergency Response Facilities; Request for Comments and Notice of Workshops

NUCLEAR REGULATORY COMMISSION

10 CFR Part 50

Functional Criteria for Emergency Response Facilities

AGENCY: Nuclear Regulatory Commission.

ACTION: Request for comments.

SUMMARY: The NRC staff is developing guidance for an acceptable method for providing the emergency response facilities needed to implement the plans for coping with emergencies that are required by § 50.34 and Appendix E of 10 CFR Part 50. Development of this guidance is motivated by the experience from the accident at the Three Mile Island nuclear power plant and the recommendations resulting from the investigations of the accident. The proposed functional criteria of the four elements of the emergency response facilities, the Safety Parameter Display (SPDS), the Technical Support Center (TSC), the Emergency Operations Facility (EOF), and the Nuclear Data Link (NDL) are contained in the document NUREG–0696, "Functional Criteria for Emergency Response Facilities." The staff is now soliciting public comment on these functional criteria and the schedule for implementation discussed below.

DATES: Comment period expires: September 29, 1980.

ADDRESSES: Written comments or suggestions should be sent to the Secretary of the Commission, U.S. Nuclear Regulatory Commission, Washington, D.C. 20555, Attention: Docketing and Service Branch. Copies of comments received may be examined at the Commission's Public Document Room at 1717 H Street, NW, Washington, D.C. A copy of the functional criteria (NUREG–0696, "Functional Criteria for Emergency Response Facilities") is also available for inspection at the same address. Requests for single copies at no cost should be made in writing to the Division of Technical Information and Document Control, U.S. Nuclear Regulatory Commission, Washington, D.C. 20555 (Phone 301–492–9530).

FOR FURTHER INFORMATION CONTACT: Mr. Warren Minners, Office of Nuclear Reactor Regulation, U.S. Nuclear Regulatory Commission, Washington, D.C. 20555 (Phone 301–492–7581).

SUPPLEMENTARY INFORMATION: The investigations of the accident at the Three Mile Island Unit 2 nuclear power plant identified the need for extensive improvements in emergency preparedness at nuclear power plants. Areas identified as deficient and in need of improvement included the organization of personnel to control, manage, assess, support and coordinate activities both on and off the site during emergency situations; the facilities for these personnel; the availability of information needed to assess and manage the reactor, other sources of radioactivity and the actual and potential radiological consequences; and the provisions for disseminating accurate and timely information, warnings and instructions to local and state agencies, the affected population and the public in general. An acceptable method of providing emergency response facilities is proposed in NUREG–0696, "Functional Criteria for Emergency Response Facilities." These proposed facilities include a Technical Support Center (TSC) and an Emergency Operations Facility (EOF) which are dedicated areas for the management, assessment, support and coordination of accident situations. Also included with these facilities is a Safety Parameter Display which monitors the safety status of the plant and the Nuclear Data Link which transmits critical plant variables to the NRC headquarters.

Background

The current requirements for emergency preparedness are contained in Appendix E to 10 CFR Part 50, "Emergency Plans for Production and Utilization Facilities," which was published in December 1970 and amended in January 1973. In conjunction with this rule, the Commission developed a document entitled "Guide to the Preparation of Emergency Plans for Production and Utilization Facilities," to help applicants establish adequate emergency plans. More complete guidance for an acceptable method for complying with this regulation, including general guidance for emergency facilities, is contained in Revision 1 of Regulatory Guide 1.101 "Emergency Planning for Nuclear Power Plants," published in March 1977.

As part of the responsibilities of the NRC and FEMA under the Atomic Energy Act, as amended, and the President's statement of December 7, 1979, the staffs of the two agencies have jointly prepared NUREG–0654 (FEMA–REP–1) "Criteria for Preparation and Evaluation of Radiological Emergency Response Plans and Preparedness in Support of Nuclear Power Plants" which was published in January 1980 for interim use and comment. The purpose of NUREG–0654 is to provide a common reference and interim guidance for state and local governments, nuclear facility operators, the NRC, FEMA, and other federal agencies in the development and review of state and local government and licensee emergency plans and preparedness, including emergency support facilities. The NRC also published (44 FR 75167) a proposed revision to its emergency planning regulations including Appendix E to 10 CFR Part 50. The proposed revision to the regulations includes a specific requirement for emergency support facilities. On June 16, 1980, the Commission issued a Statement of Policy (45 FR 41738) as further guidance to Boards and the staff that current operating license applications should be measured against the regulations as augmented by the requirements, including requirements for emergency support facilities, listed in NUREG–0694 "TMI-Related Requirements for New Operating Licensees."

Bases for the Functional Criteria

These proposed emergency facilites are needed because effective emergency response requires the establishment of dedicated areas for the management, assessment, support and coordination of potential or actual accident situations. To reduce congestion and confusion, the use of the control room should be limited to direct control of the plant. However, a nearby area designated as the Technical Support Center (TSC) is proposed to accommodate the technical personnel who support control room functions, evaluate and diagnose plant conditions and manage and coordinate other emergency response functions related to the plant. A second area, designated as the Emergency Operations Facility (EOF) is proposed to provide a planned, organized control focal point for the coordination of onsite and offsite activities. The EOF is to be located offsite and equipped to function as the center for the licensee's management, control and assessment of all activities related to an emergency having potential or actual environment consequences. A primary function of the EOF would be the analysis of plant effluent, meteorological conditions, offsite radiation releases and offsite dose projections.

In addition to these facilities, two associated functions are proposed. The first is directed to the ability of the reactor operators to readily monitor the safety status of the plant. The investigators of the TMI accident criticized the design of nuclear power plant control rooms and questioned the ability of operators to quickly and correctly interpret the multitude of alarms, indicators, and other

information that are currently installed in control rooms. As an aid to the operators in monitoring the status of the plant during normal operation transients and accident a Safety Parameter Display System (SPDS) is proposed which would provide a continuous concise display of critical plant variables. This display would be provided in the TSC and the EOF.

The second associated function is that of the NRC in accident situations. In addition to sending personnel to the site if an incident occurs, information is required by the NRC headquarters staff to monitor the licensee's actions, provide advice and be prepared, in extreme circumstances, to direct that some actions be taken. In order to accomplish this function, information concerning the status of the plant, radiation releases and meteorology would be required to be transmitted to the NRC. A proposed method of providing this information is through an acquisition, transmission, and display system designated as the Nuclear Data Link. The NDL would condition, process, and transmit a limited set of critical data from each plant for display at the NRC Operations Center in Bethesda, Maryland.

All of these elements of the emergency support facilities (the SPDS, TSC, EOF, and NDL) are interrelated and should be designed as an integrated system. The separate elements have some common and overlapping functions and all require information and data on the past or current status of the core, the plant, and the actual or potential release of radioactivity. The means of acquiring, processing, transmitting, and displaying this information and data is a major portion of the functional criteria that affects the design and integration of the individual elements. Therefore, the functional criteria for all elements have been provided in one document.

The staff also proposed the following implementation schedule. All licensees and applicants would submit to the NRC, by January 1, 1981, or prior to issuance of an operating license, whichever is later, a description of the design of the emergency response facilities; a schedule for the design, installation and construction of the facilities and proposed Technical Specifications for the Limiting Condition of Operation and Surveillance of these facilities. These emergency response facilities would be operational, but not necessarily meet the design criteria for associated instrumentation, by April 1, 1982, or prior to issuance of an operating license, whichever is later. The design criteria for associated instrumentation is specified in the proposed Revision 2 to Regulatory Guide 1.97, "Instrumentation for Light-Water-Cooled Nuclear Power Plants to Assess Plant and Environs Conditions During and Following an Accident." The emergency response facilities would meet the design criteria of Revision 2 to Regulatory Guide 1.97 as specified for the guide. The currently proposed implementation schedule for Revision 2 to Regulatory Guide 1.97 is that it will be applied to all plants issued operating licenses after June 1982 and to all other plants by June 1, 1983.

Dated at Bethesda, Md., this 11th day of August 1980.

For the Nuclear Regulatory Commission.

William J. Dircks,

Acting Executive Director for Operations.

[FR Doc. 80-24947 Filed 8-14-80; 8:45 am]

BILLING CODE 7590-01-M

---

10 CFR Part 50

Functional Criteria for Emergency Response Facilities; Workshops

AGENCY: Nuclear Regulatory Commission.

ACTION: Notice of workshops for review of proposed functional criteria for emergency response facilities.

SUMMARY: The NRC staff is developing guidance for an acceptable method for providing the emergency response facilities needed to implement the plans for coping with emergencies that are required by paragraph 50.34 and Appendix E of 10 CFR Part 50. The proposed functional criteria of the four elements of the emergency response facilities, the Safety Parameter Display (SPDS), the Technical Support Center (TSC), the Emergency Operations Facility (EOF), and the Nuclear Data Link (NDL) are contained in the document NUREG-0696, "Functional Criteria for Emergency Response Facilities." The staff is now soliciting public comment on these functional criteria and the schedule for their implementation and will hold three workshops to present, explain, and discuss the proposed criteria (For the solicitation of public comment, see another notice document published elsewhere in this issue).

DATES: August 19—Valley Forge, Pennsylvania. August 20—Chicago, Illinois. August 22—Atlanta, Georgia.

ADDRESSES: The workshops will be held from 8:30 a.m. to 5:00 p.m. at the following locations:

August 19—The Sheraton-Valley Forge, Valley Forge, Pennsylvania.

August 20—O'Hare Hilton, O'Hare Airport, Chicago, Illinois.

August 22—The Stadium Hotel, 450 Capitol Ave., SE., Atlanta, Georgia.

FOR FURTHER INFORMATION CONTACT: Mr. Warren Minners, Office of Nuclear Reactor Regulation, U.S. Nuclear Regulatory Commission, Washington, D.C. 20555 (Phone: 301/492-7581).

SUPPLEMENTARY INFORMATION: Agenda for Emergency Response Facility Workshop.

Introduction

Purpose and scope of the meeting
Background and basis for proposed criteria

Presentation of Proposed Emergency Response Facilities

Safety Parameter Display
Technical Support Center
Nuclear Data Link

Discussion, Questions and Comments

Location and habitability of the TSC and EOF
Reliability, surveillance and limiting conditions of operation
Separation and independence of data acquisition system Role of the NDL
Individual statements or comments by participants and public
Concluding Statement by NRC

Dated at Bethesda, Maryland this 6th day of August 1980.

Roger J. Mattson,

Director, Division of Safety Technology, U.S. Nuclear Regulatory Commission.

[FR Doc. 80-25027 Filed 8-15-80; 8:45 am]

BILLING CODE 7590-01-M

Reader Aids

Federal Register
Vol. 45, No. 160
Friday, August 15, 1980

INFORMATION AND ASSISTANCE

Questions and requests for specific information may be directed to the following numbers. General inquiries may be made by dialing 202-523-5240.

Federal Register, Daily Issue:

202-783-3238	Subscription orders and problems (GPO) "Dial-a-Reg" (recorded summary of highlighted documents appearing in next day's issue):
202-523-5022	Washington, D.C.
312-663-0884	Chicago, Ill.
213-688-6694	Los Angeles, Calif.
202-523-3187	Scheduling of documents for publication
523-5240	Photo copies of documents appearing in the Federal Register
523-5237	Corrections
633-6930	Public Inspection Desk
523-5227	Index and Finding Aids
523-5235	Public Briefings: "How To Use the Federal Register."

Code of Federal Regulations (CFR):

523-3419	
523-3517	
523-5227	Index and Finding Aids

Presidential Documents:

523-5233	Executive Orders and Proclamations
523-5235	Public Papers of the Presidents, and Weekly Compilation of Presidential Documents

Public Laws:

523-5266 -5282	Public Law Numbers and Dates, Slip Laws, U.S. Statutes at Large, and Index
275-3030	Slip Law Orders (GPO)

Other Publications and Services:

523-5239	TTY for the Deaf
523-5230	U.S. Government Manual
523-3408	Automation
523-4534	Special Projects
523-3517	Privacy Act Compilation

FEDERAL REGISTER PAGES AND DATES, AUGUST

51167-51538 1
51539-51754 4
51755-52138 5
52139-52354 6
52355-52768 7
52769-53074 8
53074-53436 11
53437-53800 12
53801-54008 13
54009-54298 14
54299-54710 15

CFR PARTS AFFECTED DURING AUGUST

At the end of each month, the Office of the Federal Register publishes separately a list of CFR Sections Affected (LSA), which lists parts and sections affected by documents published since the revision date of each title.

3 CFR

Executive Orders:
11790 (*See* 12231) 52139
12230 51167
12231 52139
12232 53437

Proclamations:
4776 51539
4777 53075
4778 53439
4779 53441
4780 53443
4781 53445

Administrative Orders:

Presidential Determinations:
No. 80-25 of August 8, 1980 54299

Memorandums:
July 31, 1980 51169-51174

5 CFR

Ch. XIV 51541
297 52769
410 51755
581 53447

Proposed Rules:
339 53481
359 51214
432 53481
752 53481
831 53481
930 53485

6 CFR

705 51175
706 ..... 51541, 52769

7 CFR

2 52355
6 54301
210 51175
245 52770
272 53448
273 53448
282 54638
301 51176
319 53449
331 ..... 51755, 53450, 54302
722 51755
908 ..... 52356, 53801, 54063
910 ..... 51177, 52771, 54304
916 53450
917 ..... 51179, 53450
919 54305
921 51180
922 53451
924 51180
926 52772
946 52141
948 51182
958 52141
967 52143
993 54064
1137 51542
1421 ..... 53801, 54305
1427 53077
1446 51756
1701 54307
2853 51757
2890 54307
2891 54307
2892 54307
2893 54307
2894 54307
2895 54307
2896 54307
2897 54307
2898 54307
2899 54307

Proposed Rules:
29 51572
272 ..... 51216, 53792
273 ..... 51216, 53066, 53792
301 52816
404 51573
427 54346
431 53486
722 52817
800 52339
910 53487
985 51818
1001 54066
1435 54347
1464 51579
1701 54354
1492 52342
1990 51818
2858 51217
2871 51217

8 CFR

238 54310
264 52143

Proposed Rules:
Ch. I 51832
214 51580

9 CFR

78 52772
92 52773
318 54310
381 54310

Proposed Rules:
94 52818
317 53002
318 51832
381 53002

10 CFR

110 51184
212 ..... 52112, 54325
430 53488
445 51763

456 ... 53434
500 ... 53682
501 ... 53682
504 ... 53682
1050 ... 53972
Proposed Rules:
2 ... 53972
50 ... 54662
205 ... 51833
211 ... 54662
212 ... 54069, 54688, 54694
378 ... 51581
430 ... 53714
456 ... 53422
500 ... 53368
503 ... 53368
504 ... 53368
505 ... 53368
506 ... 53368
799 ... 54264

11 CFR
100 ... 52356
110 ... 52356

12 CFR
7 ... 53080
201 ... 52144, 54009
220 ... 53452
225 ... 54326
265 ... 54011
303 ... 54326
Proposed Rules:
Ch. I ... 52166
Ch. II ... 51581
205 ... 54070
303 ... 52819
309 ... 52819
525 ... 52173
541 ... 52173, 52177
545 ... 52173, 52177
561 ... 52177
563 ... 52173, 52177

13 CFR
Proposed Rules:
101 ... 51763, 53081
108 ... 53835

14 CFR
39 ... 51543-51546, 52357, 53081, 53084, 53086, 54012-54014
71 ... 51546, 53086-53090, 54015, 54027, 54028
73 ... 54028
91 ... 51547
97 ... 52358
121 ... 51547
127 ... 51547
135 ... 51547
201 ... 53453
207 ... 53358
208 ... 53363
211 ... 53453
212 ... 53364
214 ... 53365
241 ... 53366
374a ... 53453
375 ... 51838
385 ... 53454
Proposed Rules:
Ch. I ... 53161, 53162
39 ... 53162, 54071, 54072
45 ... 53163
71 ... 51587-51590, 52396, 53163, 54072-54080
73 ... 51591
75 ... 52396, 54081
121 ... 53316
135 ... 53316
207 ... 53488
208 ... 53488
212 ... 53488
214 ... 53488
255 ... 52820

15 CFR
17a ... 54028
373 ... 54031
378 ... 53090
Proposed Rules:
19 ... 51592

16 CFR
13 ... 52776, 52778, 53455
305 ... 53340
436 ... 51763, 51765
455 ... 52750
460 ... 54702
1019 ... 53036
Proposed Rules:
13 ... 51593, 51596
239 ... 51838
441 ... 53839
705 ... 51218

17 CFR
Ch. I ... 54032
7 ... 51520
Proposed Rules:
1 ... 51598
4 ... 51600

18 CFR
2 ... 53091, 53099
154 ... 53091
270 ... 53091, 53099
271 ... 53099
277 ... 53116
290 ... 54033
282 ... 52359
292 ... 52779
375 ... 53456
Proposed Rules:
2 ... 54354
154 ... 54354
260 ... 54082
271 ... 51219, 54085
273 ... 51219, 54085
274 ... 51219, 54085
301 ... 51614

19 CFR
353 ... 52780
355 ... 54035
Proposed Rules:
Ch. I ... 51490
177 ... 54085
207 ... 54086

20 CFR
Ch. III ... 53806
404 ... 52078
416 ... 52078
Proposed Rules:
Ch. II ... 51615

21 CFR
172 ... 51766
175 ... 51184
176 ... 51767
193 ... 51768, 53457, 53458, 54035
510 ... 54327, 54328
520 ... 52781
540 ... 54329
555 ... 54327
558 ... 53457, 54328
884 ... 51185, 51186
1306 ... 54329
Proposed Rules:
Ch. II ... 51832, 52397
101 ... 53023
310 ... 54354
346 ... 54354
600 ... 52821
606 ... 52821
610 ... 51226
660 ... 51226

22 CFR
Proposed Rules:
Ch. II ... 53164-53182

23 CFR
657 ... 52365
658 ... 52365
Proposed Rules:
625 ... 51720
652 ... 51720
663 ... 51720

24 CFR
200 ... 54198
203 ... 51769, 51770
207 ... 51769, 51771
213 ... 51771
220 ... 51769, 51770
221 ... 51770, 51771
222 ... 51770
226 ... 51770
235 ... 51770, 53806
265 ... 54204
279 ... 51510
571 ... 51516
590 ... 52762
803 ... 54330
869 ... 52371
885 ... 51186
888 ... 54330
1710 ... 52144
Proposed Rules:
570 ... 51227
804 ... 54087
805 ... 54087
841 ... 54087
865 ... 51228
866 ... 51615
886 ... 51228
888 ... 51228
889 ... 51229

25 CFR
Proposed Rules:
171 ... 53164
172 ... 53164
173 ... 53164
177 ... 53164
182 ... 53164
231 ... 54331

26 CFR
1 ... 52373, 52782
26 ... 53123
26a ... 51771
48 ... 52800
54 ... 52782
Proposed Rules:
1 ... 52399, 52824
14 ... 52824
26 ... 51840

27 CFR
Proposed Rules:
Ch. I ... 51496
5 ... 54087
13 ... 54087
19 ... 52407, 54087
70 ... 52407
170 ... 54087
173 ... 54087
186 ... 54087
194 ... 54087
195 ... 54087
196 ... 54087
197 ... 54087
200 ... 54087
201 ... 54087
211 ... 54087
212 ... 54087
213 ... 54087
231 ... 54087
240 ... 52407, 54087
245 ... 52407
250 ... 52407, 54087
251 ... 54087
252 ... 54087
270 ... 52407
275 ... 52407

28 CFR
0 ... 52145
42 ... 54036
31 ... 53772
Proposed Rules:
Ch. I ... 51506, 51832
16 ... 52183
50 ... 52183

29 CFR
11 ... 51187
40 ... 51192
102 ... 51192
1625 ... 51547
1910 ... 54333
1913 ... 54333
1952 ... 51775, 53457, 54334
1999 ... 51187
2520 ... 51446
2550 ... 51194
Proposed Rules:
Ch. XIV ... 51229
1960 ... 54355
2520 ... 51231, 52824, 54370
2530 ... 51231, 52824, 54370
2550 ... 51231, 51840

30 CFR
Ch. VII ... 51547, 52834
211 ... 53128
762 ... 52375
800 ... 52306
801 ... 52306
805 ... 52306
806 ... 52306
807 ... 52306
808 ... 52306

Proposed Rules:
Ch. VII.....52407, 52408, 53180, 53839, 54371, 54372
104.....54656
250.....52408, 53840
700.....52410
701.....52410
715.....53183
732.....53489
784.....51240
816.....53183
817.....51240, 53183
884.....53489
924.....53841
926.....53489

31 CFR

341.....53
346.....53

32 CFR

763.....51776
853.....52800
888d.....52145

33 CFR

117.....51550
161.....53135
164.....54037
165.....53158
175.....54042
207.....51551, 51555
401.....52376
Proposed Rules:
117.....51617, 51618

34 CFR

64.....353412, 53414
709.....53788
Proposed Rules:
100.....52052, 53841
797.....54000

36 CFR

1228.....54334
Proposed Rules:
7.....51618
1202.....51843

37 CFR

304.....51197

38 CFR

17.....53807
21.....51777
36.....53807

39 CFR

Proposed Rules:
111.....51846

40 CFR

35.....51484, 53382
51.....52676
52.....51198, 51199, 52148, 52676, 53460, 53475, 53476, 53809, 54042, 54336
81.....53147, 54052
86.....53400
122.....52149
124.....52676
180.....51200, 51781, 51782, 53477, 53478, 54053, 54340
Proposed Rules:
6.....53187
35.....53187
52.....51619, 51620, 52184, 52834, 52841, 53490, 53491, 54088, 54089, 54372
60.....54385
61.....53842
80.....54090
81.....52841
162.....52628, 54094
164.....52628
167.....52184
169.....52184
180.....51854
408.....52411
410.....52185
717.....51855
720.....54642

41 CFR

Ch. 101.....51201, 53149
3.....53806
Proposed Rules:
101-17.....52842

42 CFR

Ch. I.....53806
Ch. III.....53806
Ch. IV.....53806
57.....51201, 51205
58.....51209, 51556
405.....51783
455.....51559
Proposed Rules:
51.....53492
72.....51241
460.....53189
461.....53189

43 CFR

4100.....53154
8351.....51740
Proposed Rules:
2560.....52303
Public Land Orders:
5741.....53155
5742.....51787
5743.....51787
5744.....51788
5745.....52382
5746.....52382

44 CFR

64.....52383
65.....51212, 51788, 52384
67.....51213, 51559, 51789, 51796
205.....53334, 53956
322.....53479
Proposed Rules:
6.....51426
67.....51855-51858, 52416, 52417, 52422, 52427

45 CFR

Subtitle A.....53806
Ch. II.....53806
Ch. III.....53806
Ch. XIII.....53806
64.....53412
151.....53996
185.....54004
121i.....52130
121o.....52130
121p.....52130
121q.....52130
121r.....52130
801.....52800
1050.....53155
1060.....51561
1480.....52782
Proposed Rules:
121q.....52136
190.....51243

46 CFR

30.....52386
61.....52386
151.....52386
Proposed Rules:
93.....54095

47 CFR

Ch. I.....52389
13.....52154
22.....52149
68.....52151, 54341
73.....51561-51563, 52152, 52800, 52801, 53156, 53818, 53821
74.....51563
76.....52153
81.....52154
83.....52154
87.....52154
90.....51811
97.....51564
Proposed Rules:
Ch. I.....51251
2.....51251, 51252, 53843
15.....51251
21.....51252
22.....53843
73.....51624, 52843, 52845, 52846, 52848, 53843
74.....51252
90.....53843, 53844
94.....51252

48 CFR

Proposed Rules:
9.....51253

49 CFR

1.....54054
571.....51569, 52365, 53157
840.....54055
941.....52389
1002.....51213, 52158, 52802
1003.....51213, 52158
1033.....51812-51815, 52158, 52160, 52161, 52803, 53157, 53824, 53826, 54344
1045A.....51213, 52158
1056.....51213, 52158
1062.....51213, 52158
1100.....51213, 52158
1120A.....53827
1130.....51213, 52158
1150.....51213, 52158
1309.....52161
1310.....52161
Proposed Rules:
Ch. X.....53846
171.....54097
173.....54097
178.....54097
398.....51626
571.....51626, 51628
1039.....54111, 54385
1080.....53190
1102.....51858
1116.....52186

50 CFR

17.....52803, 52807, 53968, 54678
18.....54056
26.....52391
32.....52392, 52393, 54057-54060, 54344
285.....53479
611.....53831
652.....53480
653.....52810
661.....53832
Proposed Rules:
13.....52849
17.....52849, 53495, 54111, 54112, 54682, 54685
20.....53982
32.....52163
216.....51254
265.....51858
285.....52853
611.....51254, 53500, 53847
655.....51254
661.....51861, 54113

AGENCY PUBLICATION ON ASSIGNED DAYS OF THE WEEK

The following agencies have agreed to publish all documents on two assigned days of the week (Monday/Thursday or Tuesday/Friday).

This is a voluntary program. (See OFR NOTICE 41 FR 32914, August 6, 1976.)

Monday	Tuesday	Wednesday	Thursday	Friday
DOT/SECRETARY	USDA/ASCS		DOT/SECRETARY	USDA/ASCS
DOT/COAST GUARD	USDA/APHIS		DOT/COAST GUARD	USDA/APHIS
DOT/FAA	USDA/FNS		DOT/FAA	USDA/FNS
DOT/FHWA	USDA/FSQS		DOT/FHWA	USDA/FSQS
DOT/FRA	USDA/REA		DOT/FRA	USDA/REA
DOT/NHTSA	MSPB/OPM		DOT/NHTSA	MSPB/OPM
DOT/RSPA	LABOR		DOT/RSPA	LABOR
DOT/SLSDC	HHS/FDA		DOT/SLSDC	HHS/FDA
DOT/UMTA			DOT/UMTA	
CSA			CSA	

Documents normally scheduled for publication on a day that will be a Federal holiday will be published the next work day following the holiday.

Comments on this program are still invited. Comments should be submitted to the Day-of-the-Week Program Coordinator, Office of the Federal Register, National Archives and Records Service, General Services Administration, Washington, D.C. 20408

Rules Going Into Effect Today

ENERGY DEPARTMENT

Economic Regulatory Administration—

47671 7-16-80 / Mandatory petroleum allocation level for mail hauling; assignments and adjustments to firms

FEDERAL COMMUNICATIONS COMMISSION

46409 7-10-80 / Stations on land in the maritime services and Alaska—public fixed stations and stations on shipboard in the maritime services; amending the Commission's rules to implement the provisions of Chapter 4 of the 1974 safety convention pertaining to radio equipment required on compulsorily fitted vessels

Rules Going Into Effect Saturday, August 16, 1980

INTERIOR DEPARTMENT

Fish and Wildlife Service—

47352 7-14-80 / Endangered and threatened wildlife and plants; endangered status for the black rhinoceros

List of Public Laws

Note: No public bills which have become law were received by the Office of the Federal Register for inclusion in today's List of Public Laws.

Last Listing August 14, 1980